MAINTENANCE & OPERATIONS TRAINING PLAN

Volume XII

Operations & Maintenance Manual
2016

Eisenhower/Johnson Memorial Tunnel FFSS Maintenance and Operations Training Plan

Project Number: C 0703-360
Sub-Account: 17810

Rev: 2
December 28, 2015

RONDINELLI life safety

TABLE OF CONTENTS

1.0 PLAN OVERVIEW……..……..3
2.0 FIRE SUPPRESION SYSTEM……6
3.0 FIRE DETECTION AND CCTV SYSTEM……..50
4.0 ELECTRICAL SYSTEM……1069
5.0 MECHANICAL (BOILER) SYSTEM……..1748

1.0 PLAN OVERVIEW

This plan contains the training syllabus and materials for each of the subsystems of the fixed fire suppression system. The training plan consists of four major sections or topics, as follows:

- Fire Suppression System
- Fire Detection and CCTV System
- Electrical System
- Mechanical (Boiler) System

Separating the training into these major sections allows for greater flexibility of scheduling attendees. Not all participants of the training may need to attend the training for each topic.

An abbreviated system overview can be provided at the beginning of each subsystem training, or scheduled as a separate session. This would be a brief verbal description of the following:

- Fixed Fire Suppression System Objectives
    - Basis of Design to include a description of the system limitations and overview of proof of concept testing.
- Review of Major Components
    - Linear Heat Detection
    - Fire Alarm and CCTV System
    - Suppression System
        - Water Supply
        - Operational Capabilities
    - Drainage System
- Summary of How the Major Components work together.

The training for each major section will be performed by either manufacturer technical or factory authorized representatives, which in many instances will be the installing contractors. Training will include a review of the operation of each system, preventative maintenance procedures, troubleshooting and repair of the associated equipment.

The training schedule will need to be coordinated with CDOT personnel to determine what individuals should attend. A summary of the training and the applicability to CDOT staff is provided below to assist with developing the training schedule.

Fire Suppression System

The Fire Suppression System training should occur prior to the Fire Detection and CCTV training. Training will be conducted by John Hulett and Jon Dowdle of Western States Fire Protection.

Day 1: The first half of the day will include an overview of the operation of the fixed fire suppression system, followed by a description of the individual components. This overview is recommended for anyone that will be operating or maintaining the system. The second half of the day includes a review of inspection, testing and maintenance procedures. This is recommended for individuals that will be responsible for maintaining the system.

Day 2: The second day of training includes an in depth and hands on review of the components of the system, focusing on the operation of the fire pump, valve configuration, fire department connection, wall hydrant/test header and the components within the Insulated Valve Enclosures. This training is recommended for any individual that will be responsible for normal or emergency operations of the system, as well as those responsible for maintaining the system.

Fire Detection and CCTV Systems

The Fire Detection and CCTV Systems training should occur after the Fire Suppression System training has been completed. Training will be provided by Arden Everhart and Mike Howell of Systems Group.

Day 1: An overview of the system and components will be provided. This overview is recommended for anyone that will be operating or maintaining the system.
This will include a classroom portion that describes the fundamentals of the Fire Alarm and CCTV systems with a focus on the operation of each system. Following the classroom training, a Systems Group will provide a hands-on demonstration at the actual workstation for interested individuals.

Electrical System

The Electrical System training can occur independently of the Fire Suppression or Fire Detection and CCTV Systems training. This training is recommended for individuals that will be maintaining or operating the electrical components of the system. Training will be provided by Tyler Clark and Nate Ziemer of Sturgeon, representative of Eaton for the Switchgear and Panelboards and representatives of Cummins for the Generator.

Mechanical (Boiler) System

The Mechanical (Boiler) System training can occur independently of the Fire Suppression or Fire Detection and CCTV Systems training. This training is recommended for individuals that will be maintaining or operating the mechanical components of the system. Training will be provided by a representative of Tigerflow for items related to the Boiler System Operation and a representative of Braconier will provide training related to the operation of the drainage system valves.

2.0 FIRE SUPPRESION SYSTEM

Western States Fire Protection Co.
Protecting Lives and Property

7026 SOUTH TUCSON WAY
CENTENNIAL, CO 80112
(303)792-0022 (303)790-3875 FAX

Fire Protection Systems
Design • Fabrication • Installation
Commercial • Industrial • Residential • Institutional
Special Hazards • High Tech • Defense • Hangars
Retrofit • Service • Inspection • Maintenance

November 12, 2015

Barnard Construction Co.
Attn: Joe Silvestri
701 Gold Avenue
Bozeman, MT 59715

Subj: EJMT Owner Training

Re: Our Plan

Dear Mr. Silvestri:

We made some modifications requested by Elizabeth Kraft to our training plan so the package is more inclusive to CDOT's needs.

We are looking forward to training the associates of CDOT on their systems. Because there are several shifts we realize we will need to be flexible. As we begin our training we will seek comments to improve the program. We suggest training be provided in two four hour sessions that will take information learned and build upon it. We would like to begin in a classroom environment and we will bring a projector. The big room up the stairs on the East portal seems like a logical place to begin.

Ours second training session would be walking the site and we feel this advanced class will be educational. We understand the schedule will be on their time so please see the attached training curriculum with estimated times so they can be scheduled.

After we have completed a couple comprehensive training sessions with CDOT we intend to video our training to allow future CDOT associates the best system specific information we can provide.

In summary, please accept this plan as our intent to meet the requirements of section 19.15 of the RFP for training. All attendees will be receiving a certificate.

If there are any questions or comments, please feel free to call.

Sincerely,

John L. Hulett
Project Manager
Cell 720-284-2472

JLH/jlh:Owner Training Plan.doc

Owner Training Submittal and Requirements
EJMT RFP Requirements

19.15 Maintenance and Operations Training

The Contractor shall provide Maintenance and Operations training a minimum of 90 days prior to Interim Acceptance. The Contractor shall provide an EJMT Maintenance and Operations Training Plan and Syllabus 30 days prior to beginning training for review by CDOT. The training shall be conducted by the manufacturer's technical service personnel or factory authorized representatives for all of the systems installed in the EJMT. The Contractor shall provide a minimum of 80 hours of training for each Tunnel Enhanced Fire Safety System subsystem.

The Contractor shall include in the training; operation instructions, theory of operation, circuit description, preventive maintenance procedures, troubleshooting and repair of all equipment specified herein. The Contractor shall include with the training all material and manuals required for each participant. Dedicated systems training for CDOT system administrators shall cover computer systems, hardware, communication networks, and software systems.

LEARNING OBJECTIVES

1. Understanding the entire system and how it is integrated.

2. Understanding how it works in the event of a fire.

3. Understanding what to do after a deluge system flows.

4. Understanding how to Inspect, Test, and maintain the system.

EISENHOUR JOHNSON MEMORIAL TUNNEL
FIXED FIRE SUPPRESSION SYSTEM

INSTRUCTOR – JOHN HULETT

AND

JON DOWDLE

TRAINING TIMES WILL VARY ON EXPERINCE OF INDIVIDUALS IN TRAINING
Training 1 = Classroom
Training 2 = System Walk

CDOT MEETING ROOM – East Ventilation Level

1. Introduction – 10 Minutes

A. Proctor Intro – 5 Minutes
B. Class Introduction (Who's who) – 5 Minutes
C. Pass around sign in roster

2. FFSS Principals of Operation – 80 Minutes

A. Water Supply – 10 minutes
B. Circulating Closed Loop System – 10 minutes
C. Isolation Valves – 10 minutes
D. Flow Control Valves – 10 minutes
E. Fire Pump- 10 minutes
F. System Drain – 10 minutes
G. Q&A Open Discussion – 20 minutes

3. Understanding to Exercise (All parts that move) – 5 Min.

A. Fire Pump
B. Control Valves
C. Switches and Devices
D. Flow Control Valves
E. Documentation for all ITM Activities

4. System Components – 30 minutes

A. Review Equipment Submittal (Projector)

5. Break (Refreshments by WSFP) – 15 Minutes

6. Inspection, Testing, and Maintenance – One Hour

A. Review Commissioning Plan – 10 Minutes
B. Review STOP – 10 minutes
C. Review Operations & Maintenance Manual – 10 Min.
D. Discuss NFPA 25 – 10 Minutes
E. As-Built Drawings – 10 Minutes
F. Owner Responsibilities – 10 Minutes
G. Impairment and Notification Procedures – 10 Minutes

7. Emergency Procedures

A. Fire Department Connection
B. Wall Hydrant

8. Summary of Training 1

A. Quiz
B. Review Quiz
C. Hand out Certificates of Completion

SYSTEM WALK (Hands On Training) - Four Hours

1. Introduction – 10 Minutes

A. Proctor Intro – 5 Minutes
B. Class Identification (Who's who) – 5 Minutes
C. Pass around sign in roster

2. Fire Pump – 1 Hour

A. Packing Gland
B. Casing Relief Valve
C. Controller
D. Transfer Switch
E. Gauges
F. Flow Meter (Test annual)
G. Test Header (Test flow every 5 years)
H. Valve Configuration
I. Monthly operation (Maintenance)

3. FFSS System Infrastructure – One Hour

A. Existing Standpipe
B. Indicating Control Valves – Supply & Pump
C. Strainer (Inspect & Maintain)
D. Tank refill procedures
E. Fire Department Connection
F. Wall Hydrant/Test Header
G. Circulating Loop
H. Indicating Control Valves – Loop Sections
I. Auxiliary Drains – Loop Sections

4. FFSS Deluge Systems – One Hour

A. Insulated Valve Enclosures (IVE)
B. Indicating Control Valves – Deluge System
C. Prime Line – Deluge System
D. Flow Control Valve (Deluge Valve & PRV)
E. Solenoid Valve – Deluge
F. Solenoid Manual Release
G. Pressure Gauges
H. Pressure Switch
I. Test Bypass
J. Automatic Drain
K. Nozzles
L. Ball Drip (Eisenhower Only)
M. Insulation Integrity
N. Icicle Problems?

TRAINING
Sequence of Events

Normal Conditions

1. At least one circulation pump shall be running in the boiler/pump room located in the Northwest portal.
2. No alarm or trouble should be indicated at the fire alarm control panel or FACP. One FACP is located in the command center, another in the office next to the command center, and the third one on the stair mezzanine located within the Northwest portal.
3. The fire pump should not be running. Do not push the green button on the fire pump control panel without verifying the circulation pumps are off line.
4. All fire pump room valves are to be left in their normal positions. A laminated guide to these valves will be located on the fire pump. Changing the normal settings of these valves should provide a trouble signal to the FACP.
5. The pressure on the 6" supply to the Eisenhower tunnel should be ???. The pressure on the 6" return from the Johnson tunnel should be ???
6. The temperature exiting the boilers should be????
7. All valves within the IVE shall be in their normal positions. Laminated instructions will be provided at each IVE indicating the normal position of these valves. If the system isolation valve is closed, a troble signal will be provided at the FACP.

Fire Event
A Linear Heat Detector (LHD) at the ceiling of tunnel monitors the ceiling temperature. When the threshold of heat is reached the fixed fire suppression system (FFSS) is triggered and the following sequence begins.

1. The heat triggered location is indicated at the fire alarm control panel or FACP. One FACP is located in the command center, another in the office next to the command center, and the third one on the stair mezzanine located within the Northwest portal.

2. The camera's automatically rotate and focuses on that location within the roadway.

3. The heat circulation pump located within the boiler/pump room located in the Northwest portal is turned off by the FACP.

4. The fire pump located within the boiler/pump room located in the Northwest portal is turned on by the FACP.

5. The deluge valve located within the insulated valve enclosure (IVE) in the supply plenum above the roadway that was triggered by heat is opened by the FACP.

6. Water flows out of the open nozzles to the roadway system that was triggered by heat. For example ST-07 is within the South Tunnel and is the seventh system East of the West roadway entrance. Each system is approximately 100 feet long.

7. The water that drains from the roadway to the East is diverted. The normally open and labeled roadway drain valve located between the roadways in the basement water treatment plant on the east side is closed by the FACP.

8. The normally closed drain valve on East side **(Where is this located?)** is opened allowing water that drains from the roadway to be diverted to underground tanks..

9. The FACP monitors the underground water supply tank located on the service road North of the West portal. This tank supplies all water to the facility and a one hour water supply for the FFSS. The water

level is monitored and when the tank is full there is one hour of water to fight the fire. The tank is monitored to indicate when there is only 30 minutes left to fight the fire. When the tank is empty, the fire pump will be shut down automatically so enough water remains in the system piping to prevent freezing.

10. In the event of a fire, call Western States Fire Protection with a code red at 303-792-0022..

Manual Override

Winds in the tunnel can affect which system actuates. Heat from a fire may actuate a downwind system that is not over the fire. If this occurs, the FACP allows the operator to open another system. The system is designed to turn on and off systems with no more than two systems operating at one time for up to one hour. Training on the FACP will be provided by Systems Group on how to manually override the system.

After a Fire Event

1. Call Western States Fire Protection at 303-792-0022 (This should have already happened)

2. Go to fire pump room at Northwest Portal. Verify the circulation pumps have automatically restarted allowing warm water to circulate in the fire protection loop to prevent freezing.

3. Within the Supply plenum above the roadway visually inspects the inside of the IVE's that enclosed the deluge valves that were opened. Visually inspect the ball drips located on the cross mains between the IVE and the nozzles to verify they automatically drain the trapped pipe.

4. During the colder months it is very importantl to restore circulating hot water to quickly prevent freezing.

5. Check water supply tank level. In the event the tank is empty evaluate waiting for fill at approximately 135 gpm or scheduling water truck to fill tank. Water trucks carry approximately 4,500 gallons and that may be provided from the mountain in only 33 minutes. In the event water trucks are required laminated instructions at the fire pump will describe the procedure.

5. Return the drain valves on East side to their normal positions. (Need help here)

6. Schedule water truck to haul away captured roadway water within the underground water tanks on the east side.

Blowout

In the event water is entering the roadway differently than normal. Although it is unlikely it is possible the 6" loop piping within the supply plenums sprung a leak. Please call Western States Fire Protection at 303-792-0022 so we can evaluate and repair. If more than a leak and the pipe is gushing, go to the boiler/pump room located in the Northwest portal and close the fire pump bypass valve and fire pump discharge valve. These valves are labeled and also shown on the laminated valve positions within the pump room.

EJMT FP DRAWING NARRATIVE

THE FIXED FIRE SUPPRESSION SYSTEM (FFSS) IS SUPPLIED BY THE EXISTING WATER STORAGE TANK FED FROM STRAIGHT CREEK, NORTH OF THE WEST PORTAL. A NEW 10-IN UNDERGROUND PIPE WILL BE INSTALLED FROM THE EXISTING TANK TO WITHIN CLOSE PROXIMITY OF THE PORTAL WHERE THE EXISTING 8-IN DOMESTIC AND STANDPIPE IS SUPPLIED. THE LINE WILL TEE INTO THE EXISTING AT THIS POINT AND REDUCE DOWN TO 8-IN TO SUPPLY THE NEW 1,250 GPM ELECTRIC FIRE PUMP LOCATED IN THE WEST VENTILATION BUILDING.

THE WATER SUPPLY TO THE FIRE PUMP WAS HYDRAULICALLY CALCULATED. THIS CALCULATION ASSUMES THE WORST CASE SCENARIO WITH THE TANK EMPTY. THE ADDITIONAL 5 PSI STATIC PRESSURE AVAILABLE WHEN THE TANK IS FULL WAS NOT UTILIZED. THE ADJUSTED WATER SUPPLY TO THE FIRE PUMP SUCTION FLANGE IS 56.9 PSI STATIC PRESSURE WITH 49.6 PSI AT 1,250 GPM. THIS ADJUSTMENT INCLUDES THE ADDITIONAL 500 GPM HOSE ALLOWANCE FOR THE EXISTING STANDPIPE SYSTEM. THE TOTAL FLOW FOR THIS CALCULATION IS 1,750 GPM.

THE 115 PSI @ 1,250 GPM FIRE PUMP IS SIZED TO PROVIDE THE REQUIRED PRESSURE AND FLOW FOR ANY TWO DELUGE SYSTEMS FLOWING AT THE SAME TIME. THE MOST DEMANDING SYSTEM IS THE EISENHOWER 3 NOZZLE SYSTEM WITH A FLOW OF 1,264.7 GPM. ALL DELUGE SYSTEM HYDRAULIC CALCULATIONS PROVIDE AT LEAST A 10% PRESSURE SAFETY FACTOR TO ALLOW FOR MINOR INSTALLATION CHANGES.

THE FIRE PUMP ASSEMBLY WILL BE PROVIDED WITH BOTH A FLOW METER AND A TEST HEADER. THE FLOW METER ALLOWS TESTING THE PERFORMANCE OF THE FIRE PUMP BY FLOWING WATER BACK TO THE PUMP SUCTION. THE TEST HEADER IS REQUIRED FOR THE ACCEPTANCE TEST AND TO VERIFY THE WATER SUPPLY FROM THE TANK EVERY 5 YEARS. THE FLOW METER CAN BE USED 4 OUT OF 5 YEARS WITH THE BENEFIT OF NOT FLOWING AND WASTING WATER OUTSIDE THE BUILDING FROM THE TEST HEADER.

A NEW WALL HYDRANT WILL BE PROVIDED CLOSE TO A NEW FIRE DEPARTMENT CONNECTION (FDC) AT THE NORTHWEST CORNER OF THE WEST VENTILATION BUILDING. THE WALL HYDRANT CAN SUPPLY A FIRE PUMPER TRUCK THAT CAN SUPPLEMENT THE WATER PRESSURE WITHIN THE FFSS THROUGH THE FDC. THE WALL HYDRANT WILL ALSO SERVE AS THE PUMP TEST HEADER WHEN REQUIRED. AN FDC WILL NOT BE PROVIDED AT THE EAST VENTILATION BUILDING BECAUSE THERE IS NO WATER SUPPLY FROM WHICH A PUMP TRUCK COULD DRAW TO SUPPLY ADDITIONAL WATER TO THE FFSS. JUST TO CLARIFY, A FIRE PUMPER TRUCK IS NOT REQUIRED FOR THE OPERATION OF THE SYSTEM BUT A RESPONDING FIRE DEPARTMENT COULD ASSIST IN THE EVENT OF A FIRE BY SUPPLEMENTING OR REPLACING THE FIRE PUMP.

DURING WINTER MONTHS A WATER TRUCK MAY NOT BE ABLE TO ACCESS THE WATER TANK FOR RE-SUPPLY. AN ARRANGEMENT OF VALVES WITH A BYPASS THAT IS NORMALLY CLOSED WILL BE PROVIDED TO ALLOW A WATER TRUCK LOCATED

BELOW AT THE NORTHWEST VENTILATION BUILDING TO FILL THE WATER SUPPLY TANK UTILIZING THE FIRE PUMP.

IN THE EVENT OF A POWER OUTAGE, THE FIRE PUMP CONTROLLER IS EQUIPPED WITH AN AUTOMATIC TRANSFER SWITCH TO ALLOW OPERATION FROM THE EMERGENCY GENERATOR. ADDITIONALLY THE FIRE PUMP CONTROLLER IS OF THE SOFT START TYPE TO REDUCE THE INRUSH DEMAND ON THE EMERGENCY GENERATOR.

THERE ARE 183 DELUGE SYSTEMS PROVIDING COVERAGE OVER THE TUNNEL ROADWAY. THERE ARE 90 SYSTEMS IN THE EISENHOWER TUNNEL AND 93 SYSTEMS IN THE JOHNSON TUNNEL. THREE (3) OF THE DELUGE VALVES ARE LOCATED WITHIN THE FIRE PUMP ROOM. THE REMAINDERS OF THE DELUGE VALVES ARE LOCATED ON THE 6-IN. X 18,100 FT. LOOP LOCATED WITHIN THE SUPPLY PLENUMS AND THE FAN DECK OF THE VENTILATION BUILDINGS. THE CAPACITY OF THE 6-IN. LOOP IS APPROXIMATELY 30,000 GALLONS.

TEN (10) 6-IN. ISOLATION VALVES WILL BE PROVIDED ON THE 6-IN X 18,100 FT. LOOP. THESE VALVES WILL ALLOW SYSTEM REPAIRS IF REQUIRED TO OCCUR WITHOUT DRAINING THE ENTIRE SYSTEM. EACH OF THESE VALVES WILL HAVE A TAMPERS SWITCH. IN THE EVENT A VALVE IS CLOSED, A TROUBLE SIGNAL WILL BE DISPLAYED AT THE FIRE CONTROL PANEL (FCP).

BOILERS, EXPANSION TANKS, AND CIRCULATION PUMPS WILL BE PROVIDED WITHIN THE FIRE PUMP ROOM TO HEAT THE 6-IN. LOOP PIPING. THE SYSTEM HEAT WILL PROVIDE PROTECTION OF THE ZONE DELUGE VALVES LOCATED WITHIN INSULATED VALVE ENCLOSURE (IVE) CABINETS INSTALLED AROUND EACH ZONE VALVE IN THE PLENUM. THE VALVE ENCLOSURE WILL BE HEATED BY CONVECTIVE HEAT TRANSFER FROM THE CIRCULATING HOT WATER IN THE 6-IN. WET SUPPLY LOOP. THE HEATED WATER WILL BE DIRECTED EAST THRU THE SUPPLY PLENUM OF THE EISENHOWER TUNNEL WHERE IT WILL CROSS THROUGH THE EAST VENTILATION BUILDING ON THE FAN DECK AND RETURN WEST WITHIN THE SUPPLY PLENUM OF THE JOHNSON TUNNEL.

IN THE EVENT OF A FIRE, THE WATER SUPPLY TO THE DELUGE SYSTEMS CAN THEN TRAVEL EAST THRU BOTH SUPPLY PLENUMS TO THE ACTIVATED DELUGE SYSTEM ALLOWING WATER TO DISCHARGE FROM THE NOZZLES.

THERE ARE FOUR DIFFERENT TYPES OF DELUGE SYSTEMS WITHIN THE PROJECT. EACH SYSTEM IS DESIGNED TO PROVIDE AT LEAST 0.16 GALLONS PER SQUARE FOOT OVER THE ROADWAY WHILE TWO SYSTEMS ARE FLOWING. THE HYDRAULIC CALCULATIONS PROVIDED ARE FOR THE MOST DEMANDING AREA FOR EACH SYSTEM TYPE. THE LOCATION WAS DETERMINED BY CHANGING THE HYDRAULIC LOCATION UNTIL THE MOST DEMANDING CONDITION WAS FOUND.

THE DIFFERENCES BETWEEN EACH OF THE SYSTEM TYPES INCLUDE THE SIZE, NOZZLE TYPE, SPACING, PRESSURE, AND FLOW. EACH SYSTEM IS SIMILAR IN THAT IT PROVIDES THE DENSITY OF 0.16 GALLONS PER SQUARE FOOT. ALL OF THE DELUGE SYSTEMS WILL HAVE A MANUAL ISOLATION VALVE WITH A TAMPER SWITCH. IN THE EVENT A VALVE IS CLOSED, A TROUBLE SIGNAL WILL BE DISPLAYED AT THE FIRE

CONTROL PANEL (FCP). IN THE EVENT A DELUGE SYSTEM IS ACTUATED, A PRESSURE SWITCH WILL INDICATE AN ALARM AT THE FCP.

THE DELUGE VALVE ASSEMBLIES ARE LOCATED APPROXIMATELY EVERY 100 FEET IN THE EISENHOWER SUPPLY PLENUM AND 96 FEET IN THE JOHNSON SUPPLY PLENUM. EACH DELUGE SYSTEM IS CONTROLLED BY A 4-IN. FLOW CONTROL VALVE. THIS VALVE IS HELD IN THE CLOSED POSITION BY A SMALL PRIME LINE. THE UPSTREAM SYSTEM WATER PRESSURE HOLDS THE VALVE CLOSED AND WHEN A SOLENOID VALVE IS OPENED BY A 24 VOLT CURRENT FROM THE FCP. THE FLOW CONTROL VALVE WILL OPEN. WHEN THE SOLENOID VALVE IS CLOSED, THE VALVE WILL CLOSE. ADDITIONALLY, THE FLOW CONTROL VALVE CAN OPERATE LIKE A PRESSURE REDUCING VALVE ALLOWING FOR ADJUSTMENT OF THE DOWNSTREAM PRESSURE. WITH THIS FEATURE, A HIGHER UPSTREAM PRESSURE WILL NOT OVER FLOW WHICH WOULD EFFECTIVELY REDUCE THE MINIMUM WATER SUPPLY DURATION OF ONE HOUR.

A 4-IN. CROSS MAIN WILL SUPPLY THE BRANCH LINES THAT SUPPLY THE ASSORTED NOZZLES. THE 4-IN. CROSS MAIN WILL NEED TO PENETRATE THE PLENUM WALL FOR EACH TUNNEL SYSTEM TO ALLOW ACCESS TO THE EXHAUST PLENUM VENTS. WITH EACH DELUGE SYSTEM LOCATED BELOW THE VALVE ASSEMBLY ALL CROSS MAINS AND BRANCH LINES WILL BE REQUIRED TO DRAIN AUTOMATICALLY TO AVOID TRAPPED WATER THAT COULD FREEZE WITHIN THE PIPE. THE BRANCH LINE PIPE WILL AUTOMATICALLY DRAIN FROM NOZZLES. THE CROSS MAIN WILL REQUIRE A ½-IN BALL DRIP THAT WILL AUTOMATICALLY DRAIN TO THE PLENUM FLOOR. THE BALL DRIP WILL AUTOMATICALLY OPEN AFTER THE SYSTEM IS SHUT DOWN AND THE PIPE IS NO LONGER PRESSURIZED.

THE EISENHOWER TUNNEL HAS TWO TYPES OF DELUGE SYSTEMS. BOTH SYSTEMS HAVE THE SAME LARGE BETE NOZZLES WITH THE DIFFERENCE BEING THREE (3) NOZZLES VERSES (4) NOZZLES. THE THREE NOZZLE SYSTEM REQUIRES MORE PRESSURE AT EACH NOZZLE TO PROVIDE THE 0.16 GALLONS PER SQUARE FOOT TO THE ROADWAY BELOW. THE LOCATION OF THE NOZZLES IS DETERMINED BY THE EXISTING PLENUM VENTS WITHIN THE EXHAUST PLENUM.

THE JOHNSON TUNNEL DELUGE SYSTEMS UTILIZE TWELVE (12) SMALLER BETE NOZZLES TO PROVIDE THE 0.16 GALLONS PER SQUARE FOOT TO THE ROADWAY BELOW. THE LOCATION OF THE NOZZLES IS DETERMINED BY THE EXISTING VENTS WITHIN THE SUPPLY AND EXHAUST PLENUM.

THE VENTILATION BUILDING DELUGE SYSTEMS UTILIZE TWELVE (12) HORIZONTAL SIDEWALL SPRINKLERS AS NOZZLES TO PROVIDE THE 0.16 GALLONS PER SQUARE FOOT TO THE ROADWAY BELOW. THE BRANCH LINES SUPPLYING THE NOZZLES AT THE PORTALS WILL BE EXPOSED ON THE WALL JUST BELOW THE LIGHTS. TO ADDRESS CONCERNS REGARDING CORROSION FROM ANTI-ICE SPRAY THAT CAN BECOME AIRBORNE FROM THE ROADWAY AT THE VENTILATION BUILDINGS, WE ARE PROVIDING GALVANIZED PIPE FOR THE BRANCH LINES AND NOZZLES WITH A CORROSION RESISTANT COATING.

CUSTOM BRACKETS AND TRAPEZE SUPPORTS WILL BE PROVIDED WITHIN THE SUPPLY PLENUM TO SUPPORT THE 6-IN. LOOP PIPING. THESE SUPPORTS WILL BE LOCATED AT A MAXIMUM OF 12.5 FT. ON CENTER. THE ENTIRE 6-IN. LOOP PIPING WILL BE PROVIDED WITH 1-½-IN FIBERGLASS INSULATION WITH A K-VALUE OF 0.23. ADDITIONALLY, RIGID 1-½-IN INSULATED PIPE SUPPORTS WILL BE PROVIDED FOR ALL HANGERS AND SUPPORTS.

THE VALVE ASSEMBLY FOR EACH DELUGE SYSTEM WILL BE INSIDE AN AIR TIGHT IVE. THE IVE'S ARE PROVIDED WITH 3-IN RIGID INSULATION WITH AN R-VALUE OF 18. THE IVE'S WILL HAVE AN ACCESS DOOR ALLOWING FOR EASE OF INSPECTION, TESTING, AND MAINTENANCE.

THE 6-IN. LOOP PIPING AND ITS SUPPLY WILL BE SEISMICALLY BRACED. CALCULATIONS ARE PROVIDED WITHIN THE DRAWINGS FOR THE MOST DEMANDING LONGITUDINAL AND LATERAL BRACE REQUIREMENTS. LONGITUDINAL BRACES WILL BE PROVIDED AT 100 FT. MAXIMUM DISTANCES WITHIN THE SUPPLY PLENUM AND WILL BE LOCATED AS CLOSE AS POSSIBLE TO THE VALVE ASSEMBLIES. EACH OF THE CUSTOM BRACKETS AND TRAPEZE SUPPORTS WITHIN THE PLENUM SERVE AS LATERAL BRACES AT 12.5 FT. MAXIMUM ON CENTER. THE LOOP AND SUPPLY PIPING WITHIN THE PORTALS WILL BE BRACED BY STANDARD METHODS WITH LONGITUDINAL BRACES AT 80 FT. MAXIMUM AND LATERAL BRACES AT 40 FT. MAXIMUM AND LOCATED WITHIN 1 FT. IN A CHANGE OF DIRECTION. ALL RISERS OR VERTICAL PIPING WILL BE PROVIDED WITH FOUR-WAY BRACING IN ACCORDANCE WITH NFPA-13.

A 4-IN. PRESSURE RELIEF VALVE WILL BE PROVIDED AT THE SOUTHEAST VENTILATION BUILDING TO PROVIDE PROTECTION OF SYSTEM COMPONENTS FROM THE POTENTIAL OF WATER HAMMERS THAT MAY OCCUR. WATER HAMMER IS USED TO DESCRIBE A PRESSURE SURGE THAT IS CAUSED WHEN A FLUID IS FORCED TO STOP OR CHANGE DIRECTION SUDDENLY. THE POTENTIAL FOR WATER HAMMER EXIST WHEN A DELUGE VALVE IS CLOSED.

EACH TUNNEL, AND THEIR RESPECTIVE AIR PLENUMS, CURVE NORTH AND SOUTH THROUGH THE MOUNTAIN AND CHANGE IN ELEVATION INCREASING FROM EAST TO WEST. THE CURVATURE OF THE TUNNELS OCCURS SLIGHTLY OVER A LARGE DISTANCE MAKING THE INSTALLATION OF ADDITIONAL FITTINGS AND SWING JOINTS UNNECESSARY. THE DEFLECTION IS MINIMAL BUT MUST BE ADDRESSED.

IN ADDITION, THE AIR PLENUMS ARE SUBJECT TO FREEZING TEMPERATURES IN THE WINTER MONTHS. TO PREVENT THE WATER IN THE PIPE FROM FREEZING, HOT WATER STARTING AT 100°F WITH A MAXIMUM DESIGN BOILER TEMPERATURE OF 130°F, WILL BE CIRCULATED THROUGH THE 6-IN. MAIN SUPPLY LOOP. MAIN PIPING WILL BE INSTALLED WHEN TEMPERATURES HAVE THE POTENTIAL TO BE -30°F. THE WORST CASE TEMPERATURE CHANGE WAS CALCULATED TO BE FROM -30°F TO 130°F. DUE TO DRASTIC CHANGES IN TEMPERATURE, THE 6-IN. PIPE WILL EXPAND AND CONTRACT. WHEN THE PIPE IS TO BE INSTALLED DURING THE COLD WEATHER SEASONS OR WHEN COLD WATER FROM THE STORAGE TANK IS INTRODUCED INTO THE PIPE DURING A FIRE OR TESTING SITUATION, THE STEEL PIPE WILL SHRINK. WHEN THE HOT WATER IS CIRCULATED THROUGH THE PIPE, THE STEEL PIPE WILL

EXPAND. THE EXPANSION FROM THE CHANGE IN TEMPERATURE WILL CAUSE A PARALLEL DEFLECTION THAT IS ADDRESSED IN THIS DESIGN.

TO ACCOMMODATE CHANGES IN THE PIPE LENGTH AND DIRECTION, EXPANSION AND DEFLECTION WILL BE ADDRESSED CONTINUALLY FOR EVERY STICK OF PIPE ALONG THE ENTIRE LENGTH OF THE TUNNEL BY USING VICTAULIC STYLE 75 FLEXIBLE COUPLINGS AND VICTAULIC STYLE 155 EXPANSION JOINT 6-IN. NIPPLES. THROUGH PRODUCT DATA AS WELL AS EXPANSION AND DEFLECTION CALCULATIONS FOR A 25 FT. SECTION OF PIPE, A SOLUTION WAS DETERMINED TO PROVIDE EXPANSION JOINTS TO ACCOMMODATE THE EXPANSION AND DEFLECTION WITHIN EACH 25 FT. SECTION OF PIPE.

EXPANSION JOINTS SHALL BE INSTALLED AT EACH END OF PIPE APPROXIMATELY EVERY 25 FT. AN EXPANSION JOINT WILL CONSIST OF (2) STYLE 75 COUPLINGS WITH (1) STYLE 155 6-IN. SCHEDULE 40 NIPPLE, 4 INCHES IN LENGTH BETWEEN THE COUPLINGS. EACH EXPANSION JOINT WILL BE INSTALLED IN COLD WEATHER CONDITIONS, THUS EACH COUPLING SHALL BE INSTALLED TO SEPARATE THE TWO ENDS OF THE PIPE TO ALLOW FOR MAXIMUM POSSIBLE SEPARATION. WHEN THE PIPE EXPANDS DUE TO HOT WATER, THERE WILL BE ZERO DEFLECTION BETWEEN EACH PIECE OF PIPE. THE EXPANSION JOINT WILL PROVIDE 0.346-IN. OF EXPANSION WHICH EXCEEDS THE REQUIRED THERMAL EXPANSION LENGTH OF 0.3216-IN.

WHEN ANGULAR DEFLECTION IS REQUIRED, AN ADDITIONAL COUPLING AND NIPPLE SHALL BE ADDED TO ACCOMMODATE THE ANGULAR DEFLECTION BETWEEN THE COUPLINGS THAT ARE PROVIDED FOR THE EXPANSION JOINT. THIS COUPLING WILL NOT BE ABLE TO DEFLECT IN THE PARALLEL DIRECTION AND WILL NOT BE USED AS AN EXPANSION COUPLING.

IN ADDITION, TWO BRACKETS SHALL BE PROVIDED FOR EACH 25 FT. LENGTH OF PIPE. BOTH BRACKETS SHALL BE BRACED TO ALLOW MINIMAL DEFLECTION BETWEEN EACH 25 FT. STICK OF PIPE. A LONGITUDINAL BRACE SHALL BE INSTALLED EVERY 100 FT. WITH THE BRACED SUPPORT CLOSEST TO THE INSULATED VALVE ENCLOSURE TO LIMIT MOVEMENT AT THE DELUGE VALVE ASSEMBLIES AND TO PROVIDE THE REQUIRED SEISMIC BRACING.

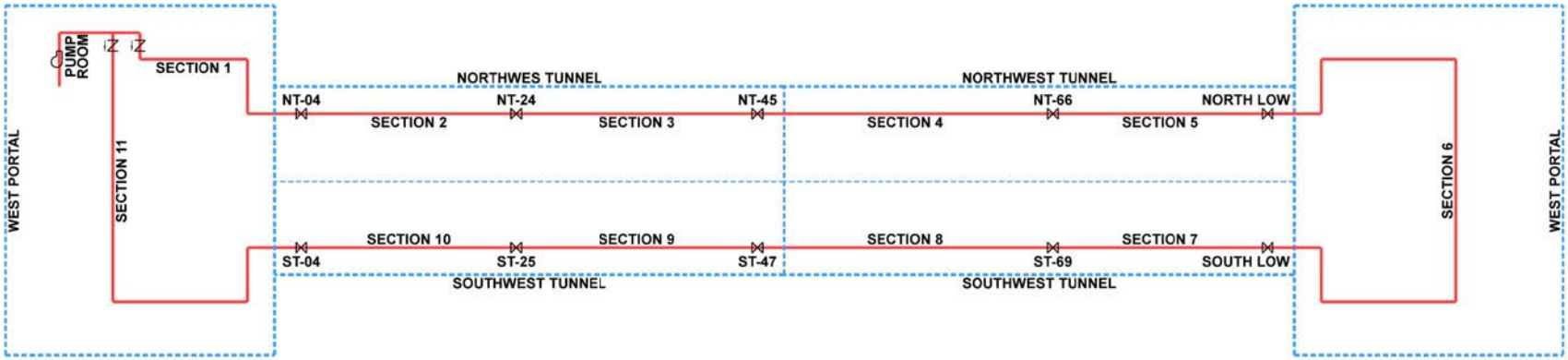

6" SUPPLY LOOP SECTION KEY PLAN
NOT TO SCALE

LOOP ISOLATION VALVES

THE 6" LOOP IS APPROXIMATELY 18,000' LONG WITH A CAPACITY OF 30,000 GALLONS.
NORMALLY THE CIRCULATION PUMPS FLOW WATER CLOCKWISE AROUND THE LOOP.
IN THE EVENT OF A FIRE, THE FLOW WILL SPLIT TO THE OPEN DELUGE SYSTEMS.
ISOLATION VALVES HAVE BEEN PROVIDED FOR SERVICING THE LOOP. THE ISOLATION VALVES WHICH SHOULD NORMALLY BE OPEN ALLOW THE LOOP TO BE DIVIDED INTO 11 SECTIONS.

LOOP ISOLATION VALVES

6" ISOLATION VALVE

2 1/2" DRAIN VALVE

TRANSITION ISOLATION VALVES

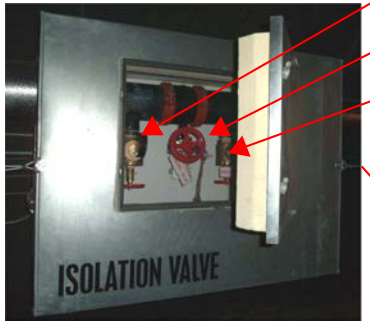

2 1/2" DRAIN VALVE

6" ISOLATION VALVE

2 1/2" DRAIN VALVE

EISENHOWER NORTH TUNNEL

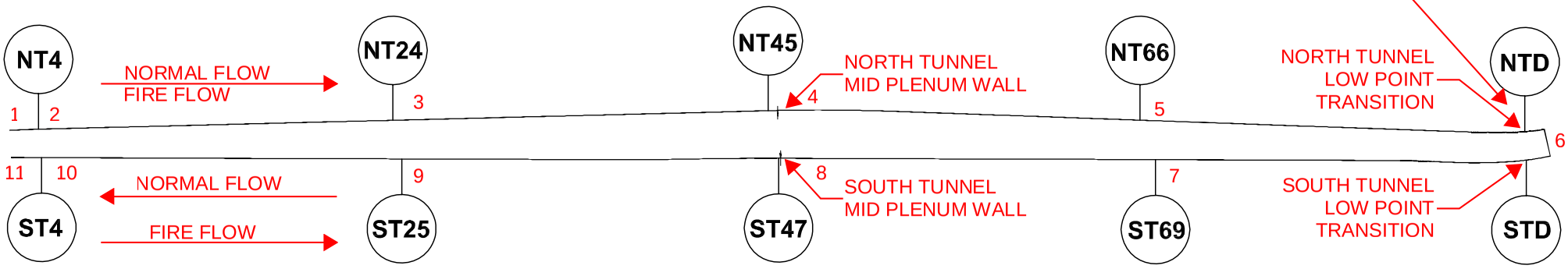

JOHNSON SOUTH TUNNEL

NORTH

DELUGE SYSTEM FLOW CONTROL VALVE ASSEMBLY

LOCATED WITHIN THE INSULATED VALVE ENCLOSURE (IVE)

SYSTEM ISOLATION VALVE WITH TAMPER SWITCH "NORMALLY OPEN"

PRIME LINE ISOLATION VALVE NORMALLY OPEN "PRESSURIZATION OF THE PRIME LINE KEEPS THE FLOW CONTROL VALVE CLOSED"

SOLENOID VALVE - NORMALLY CLOSED WHEN ELECTRICALLY ACTUATED THE PRIME LINE LOSES PRESSURE AND THE FLOW CONTROL VALVE OPENS

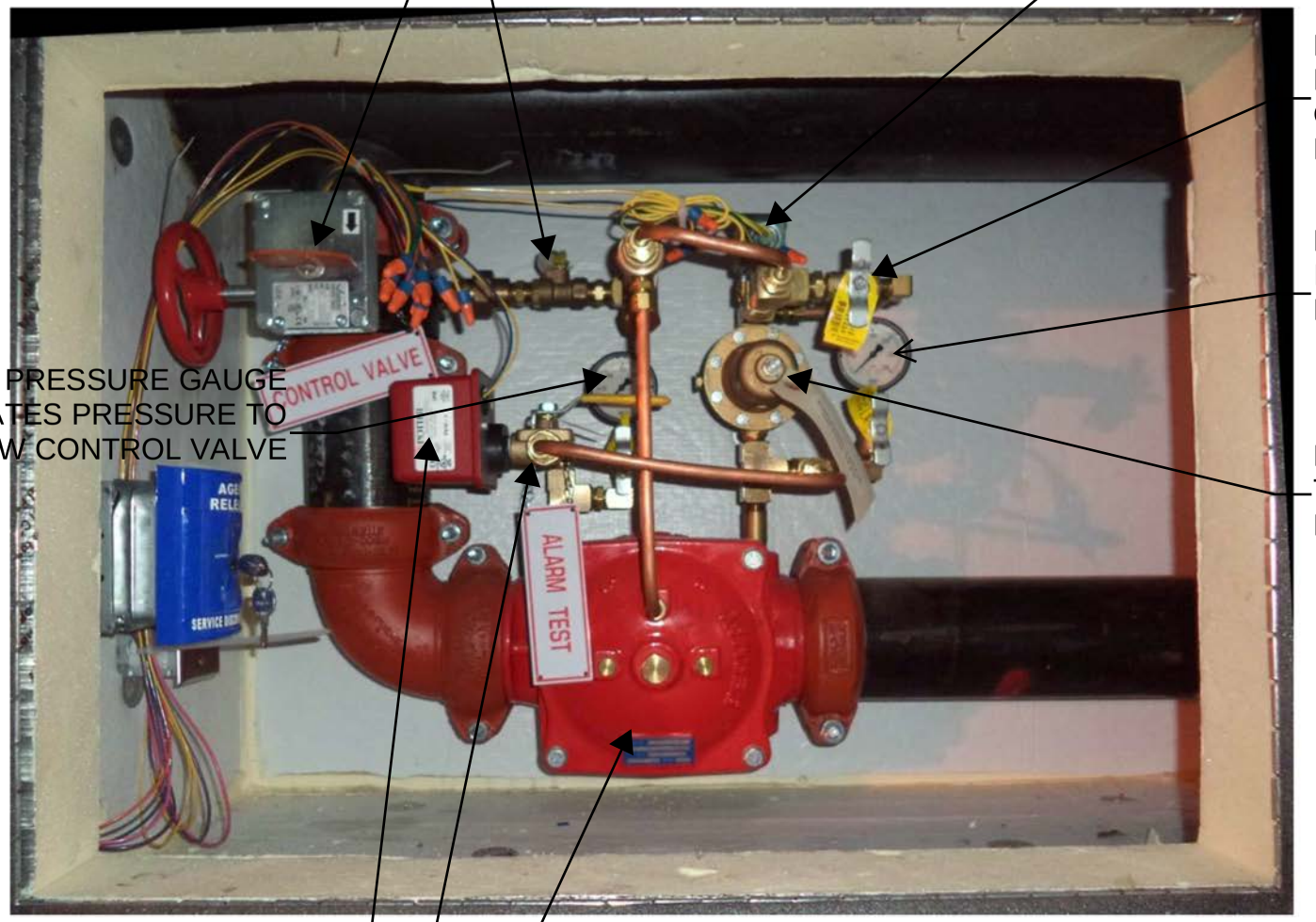

MANUAL RELEASE VALVE IS NORMALLY CLOSED OPENING THIS VALVE WILL CREATE FLOW TO THE ROADWAY BELOW

DISCHARGE PRESSURE GAUGE INDICATES PRESSURE WHEN THE FLOW CONTROL VALVE IS OPEN

PRESSURE GAUGE INDICATES PRESSURE TO FLOW CONTROL VALVE

REGULATOR IS FACTORY SET TO PROVIDE THE REQUIRED DISCHARGE PRESSURE AND FLOW

PRESSURE SWITCH INDICATES FLOW AT THE FIRE ALARM PANEL WHEN THE FLOW CONTROL VALVE IS OPENED

FLOW CONTROL VALVE IS A PRESSURE REGULATING VALVE THAT CAN BE REMOTELY OPENED AND CLOSED BY THE SOLENOID VALVE

ALARM TEST VALVE - NORMALLY CLOSED VALVE IS USED TO TEST THE PRESSURE SWITCH

SOUTH TUNNEL CONTROL VALVE ASSEMBLIES ARE OPPOSITE OF NORTH TUNNEL

Normal Flow

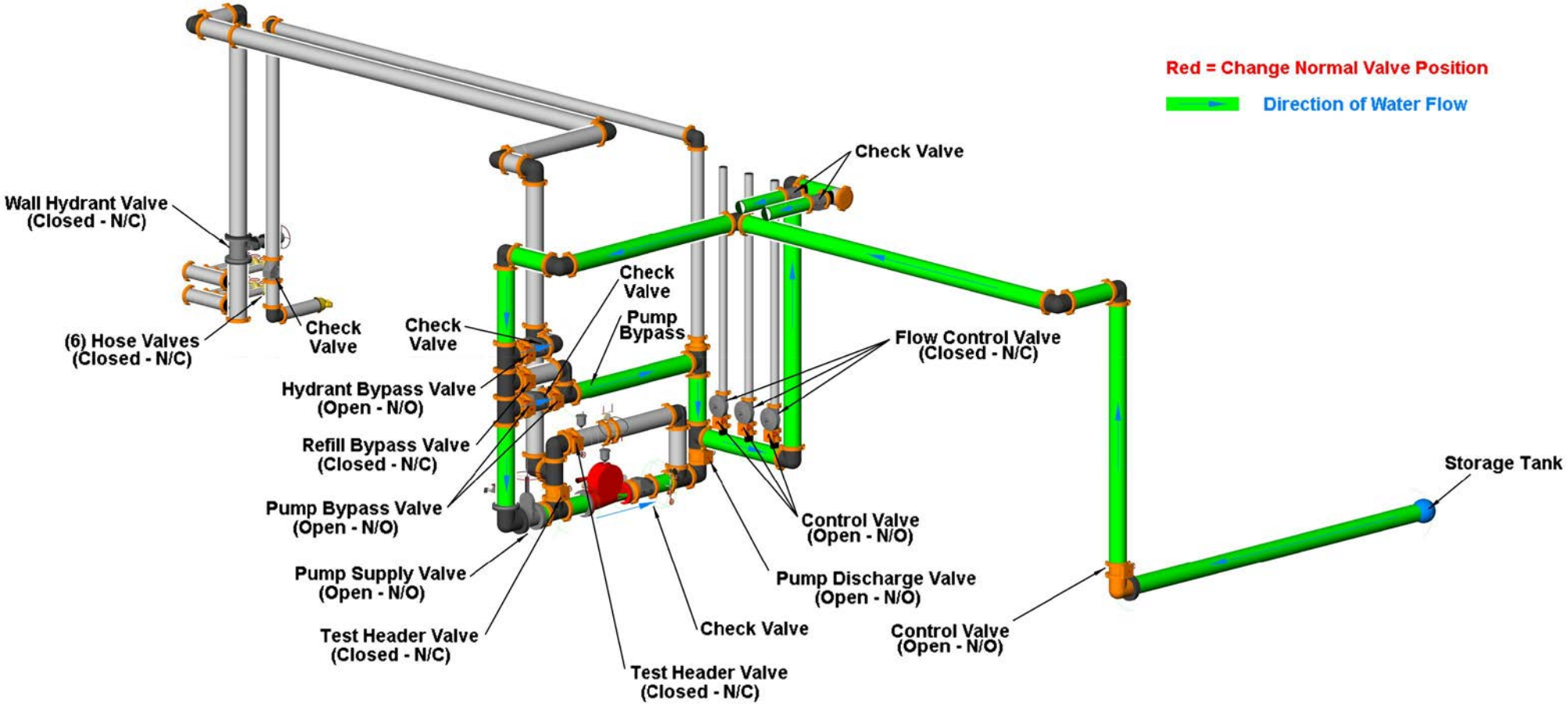
Red = Change Normal Valve Position
Direction of Water Flow
Wall Hydrant Valve (Closed - N/C)
(6) Hose Valves (Closed - N/C)
Check Valve
Check Valve
Check Valve
Pump Bypass
Hydrant Bypass Valve (Open - N/O)
Refill Bypass Valve (Closed - N/C)
Pump Bypass Valve (Open - N/O)
Pump Supply Valve (Open - N/O)
Test Header Valve (Closed - N/C)
Test Header Valve (Closed - N/C)
Check Valve
Flow Control Valve (Closed - N/C)
Control Valve (Open - N/O)
Pump Discharge Valve (Open - N/O)
Control Valve (Open - N/O)
Storage Tank

Wall Hydrant and FDC Flow

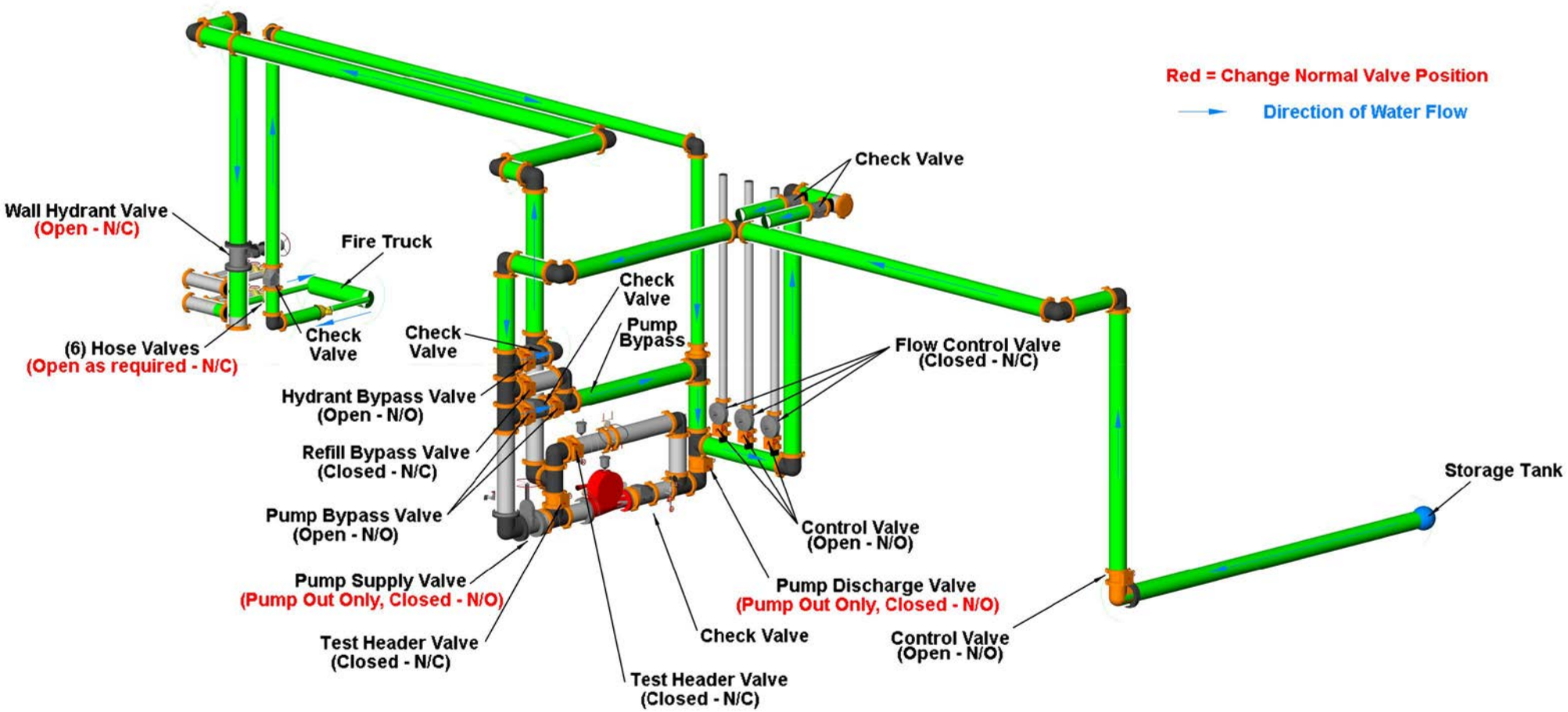

Storage Tank Refill

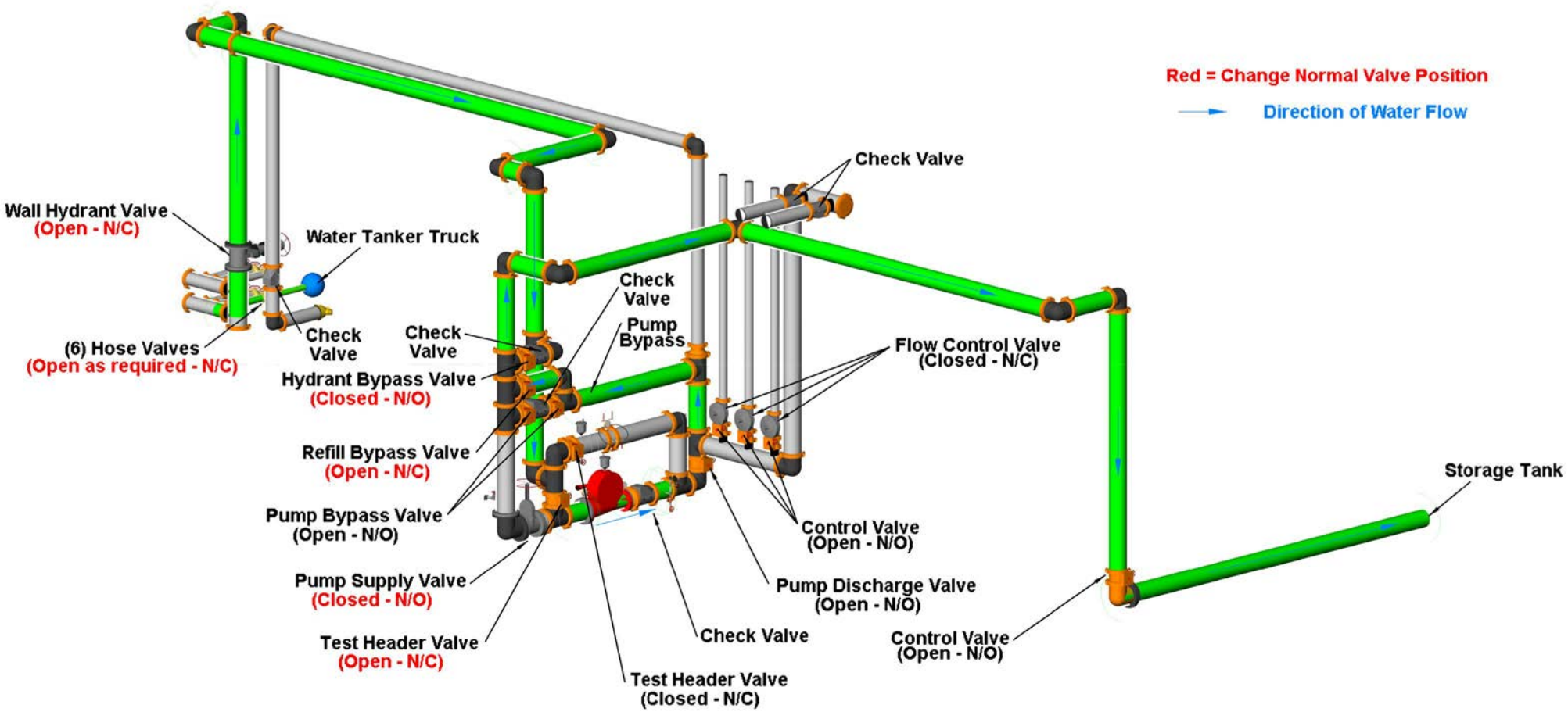

Pump Test

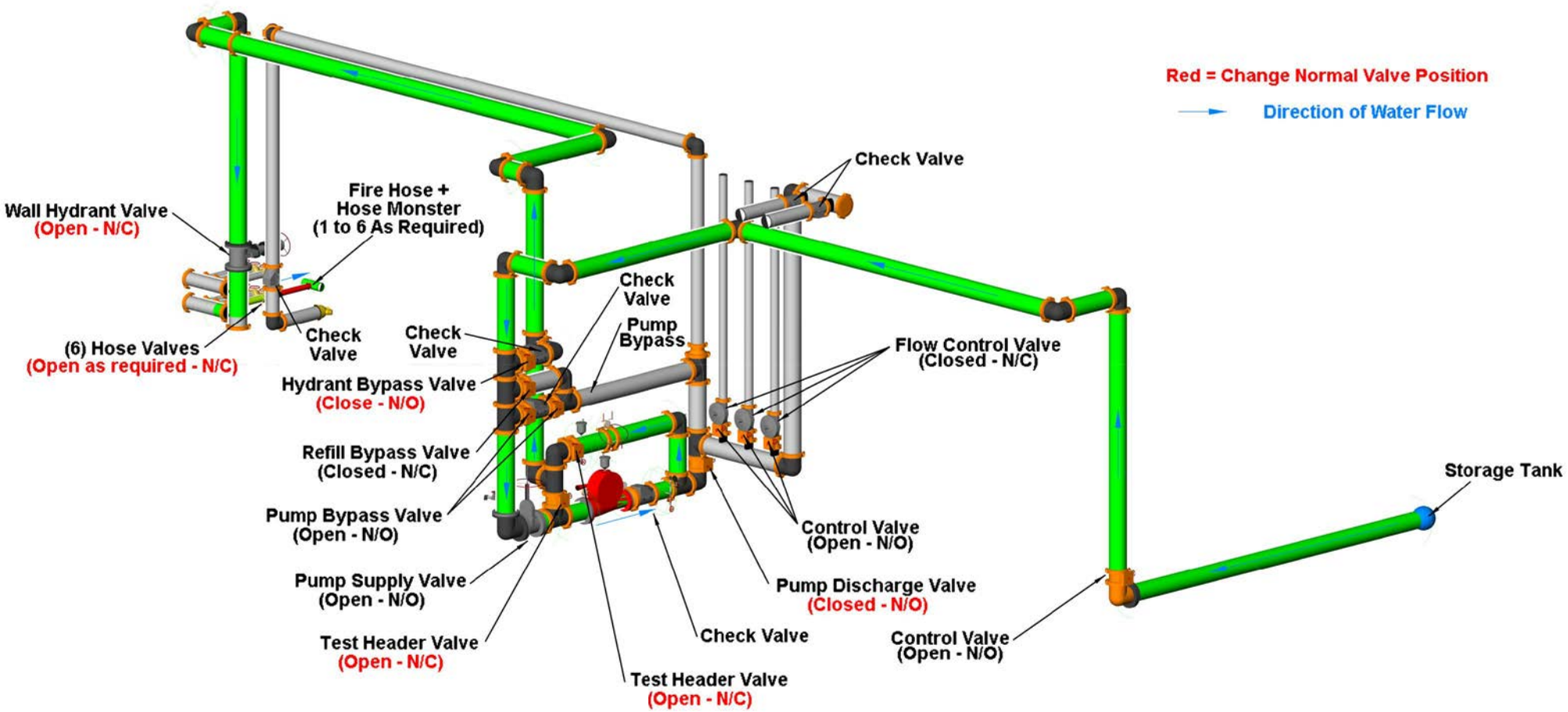
Red = Change Normal Valve Position
Direction of Water Flow
Wall Hydrant Valve
(Open - N/C)
Fire Hose +
Hose Monster
(1 to 6 As Required)
(6) Hose Valves
(Open as required - N/C)
Check
Valve
Check
Valve
Check
Valve
Pump
Bypass
Hydrant Bypass Valve
(Close - N/O)
Refill Bypass Valve
(Closed - N/C)
Pump Bypass Valve
(Open - N/O)
Pump Supply Valve
(Open - N/O)
Test Header Valve
(Open - N/C)
Test Header Valve
(Open - N/C)
Check Valve
Flow Control Valve
(Closed - N/C)
Control Valve
(Open - N/O)
Pump Discharge Valve
(Closed - N/O)
Control Valve
(Open - N/O)
Storage Tank

Certificate of Completion

Awarded To

_____

For The Successful Completion Of:

FFSS Training I – Classroom

Western States Fire Protection Co.

Protecting Lives and Property

Dates: _____

_____

WSFP Instructor/Proctor

Certificate of Completion

Awarded To

_____

For The Successful Completion Of:

FFSS Training II – Site Walk

Western States Fire Protection Co.

Protecting Lives and Property

Dates: _____

_____

WSFP Instructor/Proctor

Training Evaluation Form

for *participants* in WSFP EJMT Training

Date: _____

Title and location of training: _____

Trainer: _____

Instructions: Please indicate your level of agreement with the statements listed below in #1-11.

	Strongly Agree	Agree	Neutral	Disagree	Strongly Disagree
1. The objectives of the training were clearly defined.	❍	❍	❍	❍	❍
2. Participation and interaction were encouraged.	❍	❍	❍	❍	❍
3. The topics covered were relevant to me.	❍	❍	❍	❍	❍
4. The content was organized and easy to follow.	❍	❍	❍	❍	❍
5. The materials distributed were helpful.	❍	❍	❍	❍	❍
6. This training experience will be useful in my work.	❍	❍	❍	❍	❍
7. The trainer was knowledgeable about the training topics.	❍	❍	❍	❍	❍
8. The trainer was well prepared.	❍	❍	❍	❍	❍
9. The training objectives were met.	❍	❍	❍	❍	❍
10. The time allotted for the training was sufficient.	❍	❍	❍	❍	❍
11. The meeting room and facilities were adequate and comfortable.	❍	❍	❍	❍	❍

(*More questions on back*€)

12. What did you like most about this training?

13. What aspects of the training could be improved?

14. How do you hope to change your practice as a result of this training?

15. What additional trainings would you like to have in the future?

16. Please share other comments or expand on previous responses here:

Thank you for your feedback!

EISENHOUR JOHNSON MEMORIAL TUNNEL
FIXED FIRE SUPPRESSION SYSTEM
INSTRUCTOR – JOHN HULETT
AND
JON DOWDLE

TRAINING TIMES WILL VARY ON EXPERINCE OF INDIVIDUALS IN TRAINING
Training 1 = Classroom
Training 2 = System Walk

CDOT MEETING ROOM – East Ventilation Level

1. Introduction – 10 Minutes
- A. Proctor Intro – 5 Minutes
- B. Class Introduction (Who's who) – 5 Minutes
- C. Pass around sign in roster

2. FFSS Principals of Operation – 80 Minutes
- A. Water Supply – 10 minutes
- B. Circulating Closed Loop System – 10 minutes
- C. Isolation Valves – 10 minutes
- D. Flow Control Valves – 10 minutes
- E. Fire Pump- 10 minutes
- F. System Drain – 10 minutes
- G. Q&A Open Discussion – 20 minutes

3. Understanding to Exercise (All parts that move) – 5 Min.
- A. Fire Pump
- B. Control Valves
- C. Switches and Devices
- D. Flow Control Valves
- E. Documentation for all ITM Activities

LERANING OBJECTIVES

1. Understanding the entire system and how it is integrated.
2. Understanding how it works in the event of a fire.
3. Understanding what to do after a deluge system flows.
4. Understanding how to Inspect, Test, and maintain the system.

4. System Components – 30 minutes
- A. Review Equipment Submittal (Projector)

5. Break (Refreshments by WSFP) – 15 Minutes

6. Inspection, Testing, and Maintenance – One Hour
- A. Review Commissioning Plan – 10 Minutes
- B. Review STOP – 10 minutes
- C. Review Operations & Maintenance Manual – 10 Min.
- D. Discuss NFPA 25 – 10 Minutes
- E. As-Built Drawings – 10 Minutes
- F. Owner Responsibilities – 10 Minutes
- G. Impairment and Notification Procedures – 10 Minutes

7. Emergency Procedures
- A. Fire Department Connection
- B. Wall Hydrant

8. Summary of Training 1
- A. Quiz
- B. Review Quiz
- C. Hand out Certificates of Completion

SYSTEM WALK (Hands On Training) - Four Hours

1. Introduction – 10 Minutes
- A. Proctor Intro – 5 Minutes
- B. Class Identification (Who's who) – 5 Minutes
- C. Pass around sign in roster

2. Fire Pump – 1 Hour
- A. Packing Gland
- B. Casing Relief Valve
- C. Controller
- D. Transfer Switch
- E. Gauges
- F. Flow Meter (Test annual)
- G. Test Header (Test flow every 5 years)
- H. Valve Configuration
- I. Monthly operation (Maintenance)

3. FFSS System Infrastructure – One Hour
- A. Existing Standpipe
- B. Indicating Control Valves – Supply & Pump
- C. Strainer (Inspect & Maintain)
- D. Tank refill procedures
- E. Fire Department Connection
- F. Wall Hydrant/Test Header
- G. Circulating Loop
- H. Indicating Control Valves – Loop Sections
- I. Auxiliary Drains – Loop Sections

4. FFSS Deluge Systems – One Hour
- A. Insulated Valve Enclosures (IVE)
- B. Indicating Control Valves – Deluge System
- C. Prime Line – Deluge System
- D. Flow Control Valve (Deluge Valve & PRV)
- E. Solenoid Valve – Deluge
- F. Solenoid Manual Release
- G. Pressure Gauges
- H. Pressure Switch
- I. Test Bypass
- J. Automatic Drain
- K. Nozzles
- L. Ball Drip (Eisenhower Only)
- M. Insulation Integrity
- N. Icicle Problems?

SYSTEM WALK (Hands On Training) - Four Hours

1. Introduction – 10 Minutes
- A. Proctor Intro – 5 Minutes
- B. Class Identification (Who's who) – 5 Minutes
- C. Pass around sign in roster

2. Fire Pump – 1 Hour
- A. Packing Gland
- B. Casing Relief Valve
- C. Controller
- D. Transfer Switch
- E. Gauges
- F. Flow Meter (Test annual)
- G. Test Header (Test flow every 5 years)
- H. Valve Configuration
- I. Monthly operation (Maintenance)

3. FFSS System Infrastructure – One Hour
- A. Existing Standpipe
- B. Indicating Control Valves – Supply & Pump
- C. Strainer (Inspect & Maintain)
- D. Tank refill procedures
- E. Fire Department Connection
- F. Wall Hydrant/Test Header
- G. Circulating Loop
- H. Indicating Control Valves – Loop Sections
- I. Auxiliary Drains – Loop Sections

TRAINING
Sequence of Events

Normal Conditions

1. At least one circulation pump shall be running in the boiler/pump room located in the Northwest portal.
2. No alarm or trouble should be indicated at the fire alarm control panel or FACP. One FACP is located in the command center, another in the office next to the command center, and the third one on the stair mezzanine located within the Northwest portal.
3. The fire pump should not be running. Do not push the green button on the fire pump control panel without verifying the circulation pumps are off line.
4. All fire pump room valves are to be left in their normal positions. A laminated guide to these valves will be located on the fire pump. Changing the normal settings of these valves should provide a trouble signal to the FACP.
5. The pressure on the 6" supply to the Eisenhower tunnel should be ???. The pressure on the 6" return from the Johnson tunnel should be ???
6. The temperature exiting the boilers should be????
7. All valves within the IVE shall be in their normal positions. Laminated instructions will be provided at each IVE indicating the normal position of these valves. If the system isolation valve is closed, a treble signal will be provided at the FACP.

Fire Event

A Linear Heat Detector (LHD) at the ceiling of tunnel monitors the ceiling temperature. When the threshold of heat is reached the fixed fire suppression system (FFSS) is triggered and the following sequence begins.

1. The heat triggered location is indicated at the fire alarm control panel or FACP. One FACP is located in the command center, another in the office next to the command center, and the third one on the stair mezzanine located within the Northwest portal.
2. The camera's automatically rotate and focuses on that location within the roadway.
3. The heat circulation pump located within the boiler/pump room located in the Northwest portal is turned off by the FACP.
4. The fire pump located within the boiler/pump room located in the Northwest portal is turned on by the FACP.
5. The deluge valve located within the insulated valve enclosure (IVE) in the supply plenum above the roadway that was triggered by heat is opened by the FACP.
6. Water flows out of the open nozzles to the roadway system that was triggered by heat. For example ST-07 is within the South Tunnel and is the seventh system East of the West roadway entrance. Each system is approximately 100 feet long.
7. The water that drains from the roadway to the East is diverted. The normally open and labeled roadway drain valve located between the roadways in the basement water treatment plant on the east side is closed by the FACP.
8. The normally closed drain valve on East side **(Where is this located?)** is opened allowing water that drains from the roadway to be diverted to underground tanks..
9. The FACP monitors the underground water supply tank located on the service road North of the West portal. This tank supplies all water to the facility and a one hour water supply for the FFSS. The water

level is monitored and when the tank is full there is one hour of water to fight the fire. The tank is monitored to indicate when there is only 30 minutes left to fight the fire. When the tank is empty, the fire pump will be shut down automatically so enough water remains in the system piping to prevent freezing.

10. In the event of a fire, call Western States Fire Protection with a code red at 303-792-0022..

Manual Override
Winds in the tunnel can affect which system actuates. Heat from a fire may actuate a downwind system that is not over the fire. If this occurs, the FACP allows the operator to open another system. The system is designed to turn on and off systems with no more than two systems operating at one time for up to one hour. Training on the FACP will be provided by Systems Group on how to manually override the system.

After a Fire Event

1. Call Western States Fire Protection at 303-792-0022 (This should have already happened)
2. Go to fire pump room at Northwest Portal. Verify the circulation pumps have automatically restarted allowing warm water to circulate in the fire protection loop to prevent freezing.
3. Within the Supply plenum above the roadway visually inspects the inside of the IVE's that enclosed the deluge valves that were opened. Visually inspect the ball drips located on the cross mains between the IVE and the nozzles to verify they automatically drain the trapped pipe.
4. During the colder months it is very importantl to restore circulating hot water to quickly prevent freezing.
5. Check water supply tank level. In the event the tank is empty evaluate waiting for fill at approximately 135 gpm or scheduling water truck to fill tank. Water trucks carry approximately 4,500 gallons and that may be provided from the mountain in only 33 minutes. In the event water trucks are required laminated instructions at the fire pump will describe the procedure.
5. Return the drain valves on East side to their normal positions. (Need help here)
6. Schedule water truck to haul away captured roadway water within the underground water tanks on the east side.

Blowout
In the event water is entering the roadway differently than normal. Although it is unlikely it is possible the 6" loop piping within the supply plenums sprung a leak. Please call Western States Fire Protection at 303-792-0022 so we can evaluate and repair. If more than a leak and the pipe is gushing, go to the boiler/pump room located in the Northwest portal and close the fire pump bypass valve and fire pump discharge valve. These valves are labeled and also shown on the laminated valve positions within the pump room.

BELOW AT THE NORTHWEST VENTILATION BUILDING TO FILL THE WATER SUPPLY TANK UTILIZING THE FIRE PUMP.

IN THE EVENT OF A POWER OUTAGE, THE FIRE PUMP CONTROLLER IS EQUIPPED WITH AN AUTOMATIC TRANSFER SWITCH TO ALLOW OPERATION FROM THE EMERGENCY GENERATOR. ADDITIONALLY THE FIRE PUMP CONTROLLER IS OF THE SOFT START TYPE TO REDUCE THE INRUSH DEMAND ON THE EMERGENCY GENERATOR.

THERE ARE 183 DELUGE SYSTEMS PROVIDING COVERAGE OVER THE TUNNEL ROADWAY. THERE ARE 90 SYSTEMS IN THE EISENHOWER TUNNEL AND 93 SYSTEMS IN THE JOHNSON TUNNEL. THREE (3) OF THE DELUGE VALVES ARE LOCATED WITHIN THE FIRE PUMP ROOM. THE REMAINDERS OF THE DELUGE VALVES ARE LOCATED ON THE 6-IN. X 18,100 FT. LOOP LOCATED WITHIN THE SUPPLY PLENUMS AND THE FAN DECK OF THE VENTILATION BUILDINGS. THE CAPACITY OF THE 6-IN. LOOP IS APPROXIMATELY 30,000 GALLONS.

TEN (10) 6-IN. ISOLATION VALVES WILL BE PROVIDED ON THE 6-IN X 18,100 FT. LOOP. THESE VALVES WILL ALLOW SYSTEM REPAIRS IF REQUIRED TO OCCUR WITHOUT DRAINING THE ENTIRE SYSTEM. EACH OF THESE VALVES WILL HAVE A TAMPERS SWITCH. IN THE EVENT A VALVE IS CLOSED, A TROUBLE SIGNAL WILL BE DISPLAYED AT THE FIRE CONTROL PANEL (FCP).

BOILERS, EXPANSION TANKS, AND CIRCULATION PUMPS WILL BE PROVIDED WITHIN THE FIRE PUMP ROOM TO HEAT THE 6-IN. LOOP PIPING. THE SYSTEM HEAT WILL PROVIDE PROTECTION OF THE ZONE DELUGE VALVES LOCATED WITHIN INSULATED VALVE ENCLOSURE (IVE) CABINETS INSTALLED AROUND EACH ZONE VALVE IN THE PLENUM. THE VALVE ENCLOSURE WILL BE HEATED BY CONVECTIVE HEAT TRANSFER FROM THE CIRCULATING HOT WATER IN THE 6-IN. WET SUPPLY LOOP. THE HEATED WATER WILL BE DIRECTED EAST THRU THE SUPPLY PLENUM OF THE EISENHOWER TUNNEL WHERE IT WILL CROSS THROUGH THE EAST VENTILATION BUILDING ON THE FAN DECK AND RETURN WEST WITHIN THE SUPPLY PLENUM OF THE JOHNSON TUNNEL.

IN THE EVENT OF A FIRE, THE WATER SUPPLY TO THE DELUGE SYSTEMS CAN THEN TRAVEL EAST THRU BOTH SUPPLY PLENUMS TO THE ACTIVATED DELUGE SYSTEM ALLOWING WATER TO DISCHARGE FROM THE NOZZLES.

THERE ARE FOUR DIFFERENT TYPES OF DELUGE SYSTEMS WITHIN THE PROJECT. EACH SYSTEM IS DESIGNED TO PROVIDE AT LEAST 0.16 GALLONS PER SQUARE FOOT OVER THE ROADWAY WHILE TWO SYSTEMS ARE FLOWING. THE HYDRAULIC CALCULATIONS PROVIDED ARE FOR THE MOST DEMANDING AREA FOR EACH SYSTEM TYPE. THE LOCATION WAS DETERMINED BY CHANGING THE HYDRAULIC LOCATION UNTIL THE MOST DEMANDING CONDITION WAS FOUND.

THE DIFFERENCES BETWEEN EACH OF THE SYSTEM TYPES INCLUDE THE SIZE, NOZZLE TYPE, SPACING, PRESSURE, AND FLOW. EACH SYSTEM IS SIMILAR IN THAT IT PROVIDES THE DENSITY OF 0.16 GALLONS PER SQUARE FOOT. ALL OF THE DELUGE SYSTEMS WILL HAVE A MANUAL ISOLATION VALVE WITH A TAMPER SWITCH. IN THE EVENT A VALVE IS CLOSED, A TROUBLE SIGNAL WILL BE DISPLAYED AT THE FIRE

EJMT FP DRAWING NARRATIVE

THE FIXED FIRE SUPPRESSION SYSTEM (FFSS) IS SUPPLIED BY THE EXISTING WATER STORAGE TANK FED FROM STRAIGHT CREEK, NORTH OF THE WEST PORTAL. A NEW 10-IN UNDERGROUND PIPE WILL BE INSTALLED FROM THE EXISTING TANK TO WITHIN CLOSE PROXIMITY OF THE PORTAL WHERE THE EXISTING 8-IN DOMESTIC AND STANDPIPE IS SUPPLIED. THE LINE WILL TEE INTO THE EXISTING AT THIS POINT AND REDUCE DOWN TO 8-IN TO SUPPLY THE NEW 1,250 GPM ELECTRIC FIRE PUMP LOCATED IN THE WEST VENTILATION BUILDING.

THE WATER SUPPLY TO THE FIRE PUMP WAS HYDRAULICALLY CALCULATED. THIS CALCULATION ASSUMES THE WORST CASE SCENARIO WITH THE TANK EMPTY. THE ADDITIONAL 5 PSI STATIC PRESSURE AVAILABLE WHEN THE TANK IS FULL WAS NOT UTILIZED. THE ADJUSTED WATER SUPPLY TO THE FIRE PUMP SUCTION FLANGE IS 56.9 PSI STATIC PRESSURE WITH 49.6 PSI AT 1,250 GPM. THIS ADJUSTMENT INCLUDES THE ADDITIONAL 500 GPM HOSE ALLOWANCE FOR THE EXISTING STANDPIPE SYSTEM. THE TOTAL FLOW FOR THIS CALCULATION IS 1,750 GPM.

THE 115 PSI @ 1,250 GPM FIRE PUMP IS SIZED TO PROVIDE THE REQUIRED PRESSURE AND FLOW FOR ANY TWO DELUGE SYSTEMS FLOWING AT THE SAME TIME. THE MOST DEMANDING SYSTEM IS THE EISENHOWER 3 NOZZLE SYSTEM WITH A FLOW OF 1,264.7 GPM. ALL DELUGE SYSTEM HYDRAULIC CALCULATIONS PROVIDE AT LEAST A 10% PRESSURE SAFETY FACTOR TO ALLOW FOR MINOR INSTALLATION CHANGES.

THE FIRE PUMP ASSEMBLY WILL BE PROVIDED WITH BOTH A FLOW METER AND A TEST HEADER. THE FLOW METER ALLOWS TESTING THE PERFORMANCE OF THE FIRE PUMP BY FLOWING WATER BACK TO THE PUMP SUCTION. THE TEST HEADER IS REQUIRED FOR THE ACCEPTANCE TEST AND TO VERIFY THE WATER SUPPLY FROM THE TANK EVERY 5 YEARS. THE FLOW METER CAN BE USED 4 OUT OF 5 YEARS WITH THE BENEFIT OF NOT FLOWING AND WASTING WATER OUTSIDE THE BUILDING FROM THE TEST HEADER.

A NEW WALL HYDRANT WILL BE PROVIDED CLOSE TO A NEW FIRE DEPARTMENT CONNECTION (FDC) AT THE NORTHWEST CORNER OF THE WEST VENTILATION BUILDING. THE WALL HYDRANT CAN SUPPLY A FIRE PUMPER TRUCK THAT CAN SUPPLEMENT THE WATER PRESSURE WITHIN THE FFSS THROUGH THE FDC. THE WALL HYDRANT WILL ALSO SERVE AS THE PUMP TEST HEADER WHEN REQUIRED. AN FDC WILL NOT BE PROVIDED AT THE EAST VENTILATION BUILDING BECAUSE THERE IS NO WATER SUPPLY FROM WHICH A PUMP TRUCK COULD DRAW TO SUPPLY ADDITIONAL WATER TO THE FFSS. JUST TO CLARIFY, A FIRE PUMPER TRUCK IS NOT REQUIRED FOR THE OPERATION OF THE SYSTEM BUT A RESPONDING FIRE DEPARTMENT COULD ASSIST IN THE EVENT OF A FIRE BY SUPPLEMENTING OR REPLACING THE FIRE PUMP.

DURING WINTER MONTHS A WATER TRUCK MAY NOT BE ABLE TO ACCESS THE WATER TANK FOR RE-SUPPLY. AN ARRANGEMENT OF VALVES WITH A BYPASS THAT IS NORMALLY CLOSED WILL BE PROVIDED TO ALLOW A WATER TRUCK LOCATED

CONTROL PANEL (FCP). IN THE EVENT A DELUGE SYSTEM IS ACTUATED, A PRESSURE SWITCH WILL INDICATE AN ALARM AT THE FCP.

THE DELUGE VALVE ASSEMBLIES ARE LOCATED APPROXIMATELY EVERY 100 FEET IN THE EISENHOWER SUPPLY PLENUM AND 96 FEET IN THE JOHNSON SUPPLY PLENUM. EACH DELUGE SYSTEM IS CONTROLLED BY A 4-IN. FLOW CONTROL VALVE. THIS VALVE IS HELD IN THE CLOSED POSITION BY A SMALL PRIME LINE. THE UPSTREAM SYSTEM WATER PRESSURE HOLDS THE VALVE CLOSED AND WHEN A SOLENOID VALVE IS OPENED BY A 24 VOLT CURRENT FROM THE FCP. THE FLOW CONTROL VALVE WILL OPEN. WHEN THE SOLENOID VALVE IS CLOSED, THE VALVE WILL CLOSE. ADDITIONALLY, THE FLOW CONTROL VALVE CAN OPERATE LIKE A PRESSURE REDUCING VALVE ALLOWING FOR ADJUSTMENT OF THE DOWNSTREAM PRESSURE. WITH THIS FEATURE, A HIGHER UPSTREAM PRESSURE WILL NOT OVER FLOW WHICH WOULD EFFECTIVELY REDUCE THE MINIMUM WATER SUPPLY DURATION OF ONE HOUR.

A 4-IN. CROSS MAIN WILL SUPPLY THE BRANCH LINES THAT SUPPLY THE ASSORTED NOZZLES. THE 4-IN. CROSS MAIN WILL NEED TO PENETRATE THE PLENUM WALL FOR EACH TUNNEL SYSTEM TO ALLOW ACCESS TO THE EXHAUST PLENUM VENTS. WITH EACH DELUGE SYSTEM LOCATED BELOW THE VALVE ASSEMBLY ALL CROSS MAINS AND BRANCH LINES WILL BE REQUIRED TO DRAIN AUTOMATICALLY TO AVOID TRAPPED WATER THAT COULD FREEZE WITHIN THE PIPE. THE BRANCH LINE PIPE WILL AUTOMATICALLY DRAIN FROM NOZZLES. THE CROSS MAIN WILL REQUIRE A ½-IN BALL DRIP THAT WILL AUTOMATICALLY DRAIN TO THE PLENUM FLOOR. THE BALL DRIP WILL AUTOMATICALLY OPEN AFTER THE SYSTEM IS SHUT DOWN AND THE PIPE IS NO LONGER PRESSURIZED.

THE EISENHOWER TUNNEL HAS TWO TYPES OF DELUGE SYSTEMS. BOTH SYSTEMS HAVE THE SAME LARGE BETE NOZZLES WITH THE DIFFERENCE BEING THREE (3) NOZZLES VERSES (4) NOZZLES. THE THREE NOZZLE SYSTEM REQUIRES MORE PRESSURE AT EACH NOZZLE TO PROVIDE THE 0.16 GALLONS PER SQUARE FOOT TO THE ROADWAY BELOW. THE LOCATION OF THE NOZZLES IS DETERMINED BY THE EXISTING PLENUM VENTS WITHIN THE EXHAUST PLENUM.

THE JOHNSON TUNNEL DELUGE SYSTEMS UTILIZE TWELVE (12) SMALLER BETE NOZZLES TO PROVIDE THE 0.16 GALLONS PER SQUARE FOOT TO THE ROADWAY BELOW. THE LOCATION OF THE NOZZLES IS DETERMINED BY THE EXISTING VENTS WITHIN THE SUPPLY AND EXHAUST PLENUM.

THE VENTILATION BUILDING DELUGE SYSTEMS UTILIZE TWELVE (12) HORIZONTAL SIDEWALL SPRINKLERS AS NOZZLES TO PROVIDE THE 0.16 GALLONS PER SQUARE FOOT TO THE ROADWAY BELOW. THE BRANCH LINES SUPPLYING THE NOZZLES AT THE PORTALS WILL BE EXPOSED ON THE WALL JUST BELOW THE LIGHTS. TO ADDRESS CONCERNS REGARDING CORROSION FROM ANTI-ICE SPRAY THAT CAN BECOME AIRBORNE FROM THE ROADWAY AT THE VENTILATION BUILDINGS, WE ARE PROVIDING GALVANIZED PIPE FOR THE BRANCH LINES AND NOZZLES WITH A CORROSION RESISTANT COATING.

CUSTOM BRACKETS AND TRAPEZE SUPPORTS WILL BE PROVIDED WITHIN THE SUPPLY PLENUM TO SUPPORT THE 6-IN. LOOP PIPING. THESE SUPPORTS WILL BE LOCATED AT A MAXIMUM OF 12.5 FT. ON CENTER. THE ENTIRE 6-IN. LOOP PIPING WILL BE PROVIDED WITH 1-½-IN FIBERGLASS INSULATION WITH A K-VALUE OF 0.23. ADDITIONALLY, RIGID 1-½-IN INSULATED PIPE SUPPORTS WILL BE PROVIDED FOR ALL HANGERS AND SUPPORTS.

THE VALVE ASSEMBLY FOR EACH DELUGE SYSTEM WILL BE INSIDE AN AIR TIGHT IVE. THE IVE'S ARE PROVIDED WITH 3-IN RIGID INSULATION WITH AN R-VALUE OF 18. THE IVE'S WILL HAVE AN ACCESS DOOR ALLOWING FOR EASE OF INSPECTION, TESTING, AND MAINTENANCE.

THE 6-IN. LOOP PIPING AND ITS SUPPLY WILL BE SEISMICALLY BRACED. CALCULATIONS ARE PROVIDED WITHIN THE DRAWINGS FOR THE MOST DEMANDING LONGITUDINAL AND LATERAL BRACE REQUIREMENTS. LONGITUDINAL BRACES WILL BE PROVIDED AT 100 FT. MAXIMUM DISTANCES WITHIN THE SUPPLY PLENUM AND WILL BE LOCATED AS CLOSE AS POSSIBLE TO THE VALVE ASSEMBLIES. EACH OF THE CUSTOM BRACKETS AND TRAPEZE SUPPORTS WITHIN THE PLENUM SERVE AS LATERAL BRACES AT 12.5 FT. MAXIMUM ON CENTER. THE LOOP AND SUPPLY PIPING WITHIN THE PORTALS WILL BE BRACED BY STANDARD METHODS WITH LONGITUDINAL BRACES AT 80 FT. MAXIMUM AND LATERAL BRACES AT 40 FT. MAXIMUM AND LOCATED WITHIN 1 FT. IN A CHANGE OF DIRECTION. ALL RISERS OR VERTICAL PIPING WILL BE PROVIDED WITH FOUR-WAY BRACING IN ACCORDANCE WITH NFPA-13.

A 4-IN. PRESSURE RELIEF VALVE WILL BE PROVIDED AT THE SOUTHEAST VENTILATION BUILDING TO PROVIDE PROTECTION OF SYSTEM COMPONENTS FROM THE POTENTIAL OF WATER HAMMERS THAT MAY OCCUR. WATER HAMMER IS USED TO DESCRIBE A PRESSURE SURGE THAT IS CAUSED WHEN A FLUID IS FORCED TO STOP OR CHANGE DIRECTION SUDDENLY. THE POTENTIAL FOR WATER HAMMER EXIST WHEN A DELUGE VALVE IS CLOSED.

EACH TUNNEL, AND THEIR RESPECTIVE AIR PLENUMS, CURVE NORTH AND SOUTH THROUGH THE MOUNTAIN AND CHANGE IN ELEVATION INCREASING FROM EAST TO WEST. THE CURVATURE OF THE TUNNELS OCCURS SLIGHTLY OVER A LARGE DISTANCE MAKING THE INSTALLATION OF ADDITIONAL FITTINGS AND SWING JOINTS UNNECESSARY. THE DEFLECTION IS MINIMAL BUT MUST BE ADDRESSED.

IN ADDITION, THE AIR PLENUMS ARE SUBJECT TO FREEZING TEMPERATURES IN THE WINTER MONTHS. TO PREVENT THE WATER IN THE PIPE FROM FREEZING, HOT WATER STARTING AT 100°F WITH A MAXIMUM DESIGN BOILER TEMPERATURE OF 130°F, WILL BE CIRCULATED THROUGH THE 6-IN. MAIN SUPPLY LOOP. MAIN PIPING WILL BE INSTALLED WHEN TEMPERATURES HAVE THE POTENTIAL TO BE -30°F. THE WORST CASE TEMPERATURE CHANGE WAS CALCULATED TO BE FROM -30°F TO 130°F. DUE TO DRASTIC CHANGES IN TEMPERATURE, THE 6-IN. PIPE WILL EXPAND AND CONTRACT. WHEN THE PIPE IS TO BE INSTALLED DURING THE COLD WEATHER SEASONS OR WHEN COLD WATER FROM THE STORAGE TANK IS INTRODUCED INTO THE PIPE DURING A FIRE OR TESTING SITUATION, THE STEEL PIPE WILL SHRINK. WHEN THE HOT WATER IS CIRCULATED THROUGH THE PIPE, THE STEEL PIPE WILL

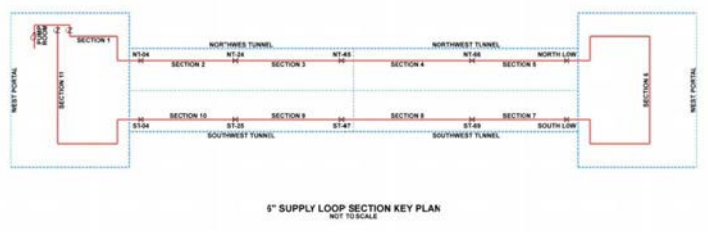

6" SUPPLY LOOP SECTION KEY PLAN
NOT TO SCALE

EXPAND. THE EXPANSION FROM THE CHANGE IN TEMPERATURE WILL CAUSE A PARALLEL DEFLECTION THAT IS ADDRESSED IN THIS DESIGN.

TO ACCOMMODATE CHANGES IN THE PIPE LENGTH AND DIRECTION, EXPANSION AND DEFLECTION WILL BE ADDRESSED CONTINUALLY FOR EVERY STICK OF PIPE ALONG THE ENTIRE LENGTH OF THE TUNNEL BY USING VICTAULIC STYLE 75 FLEXIBLE COUPLINGS AND VICTAULIC STYLE 155 EXPANSION JOINT 6-IN. NIPPLES. THROUGH PRODUCT DATA AS WELL AS EXPANSION AND DEFLECTION CALCULATIONS FOR A 25 FT. SECTION OF PIPE, A SOLUTION WAS DETERMINED TO PROVIDE EXPANSION JOINTS TO ACCOMMODATE THE EXPANSION AND DEFLECTION WITHIN EACH 25 FT. SECTION OF PIPE.

EXPANSION JOINTS SHALL BE INSTALLED AT EACH END OF PIPE APPROXIMATELY EVERY 25 FT. AN EXPANSION JOINT WILL CONSIST OF (2) STYLE 75 COUPLINGS WITH (1) STYLE 155 6-IN. SCHEDULE 40 NIPPLE, 4 INCHES IN LENGTH BETWEEN THE COUPLINGS. EACH EXPANSION JOINT WILL BE INSTALLED IN COLD WEATHER CONDITIONS, THUS EACH COUPLING SHALL BE INSTALLED TO SEPARATE THE TWO ENDS OF THE PIPE TO ALLOW FOR MAXIMUM POSSIBLE SEPARATION. WHEN THE PIPE EXPANDS DUE TO HOT WATER, THERE WILL BE ZERO DEFLECTION BETWEEN EACH PIECE OF PIPE. THE EXPANSION JOINT WILL PROVIDE 0.346-IN. OF EXPANSION WHICH EXCEEDS THE REQUIRED THERMAL EXPANSION LENGTH OF 0.3216-IN.

WHEN ANGULAR DEFLECTION IS REQUIRED, AN ADDITIONAL COUPLING AND NIPPLE SHALL BE ADDED TO ACCOMMODATE THE ANGULAR DEFLECTION BETWEEN THE COUPLINGS THAT ARE PROVIDED FOR THE EXPANSION JOINT. THIS COUPLING WILL NOT BE ABLE TO DEFLECT IN THE PARALLEL DIRECTION AND WILL NOT BE USED AS AN EXPANSION COUPLING.

IN ADDITION, TWO BRACKETS SHALL BE PROVIDED FOR EACH 25 FT. LENGTH OF PIPE. BOTH BRACKETS SHALL BE BRACED TO ALLOW MINIMAL DEFLECTION BETWEEN EACH 25 FT. STICK OF PIPE. A LONGITUDINAL BRACE SHALL BE INSTALLED EVERY 100 FT. WITH THE BRACED SUPPORT CLOSEST TO THE INSULATED VALVE ENCLOSURE TO LIMIT MOVEMENT AT THE DELUGE VALVE ASSEMBLIES AND TO PROVIDE THE REQUIRED SEISMIC BRACING.

DELUGE SYSTEM FLOW CONTROL VALVE ASSEMBLY

LOCATED WITHIN THE INSULATED VALVE ENCLOSURE (IVE)

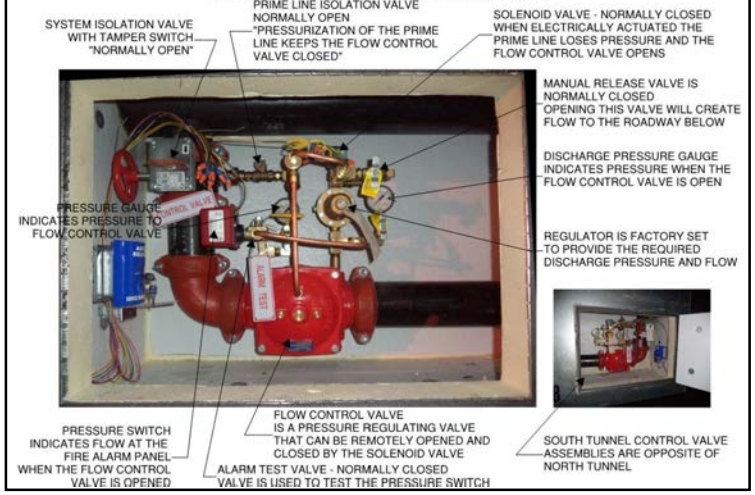

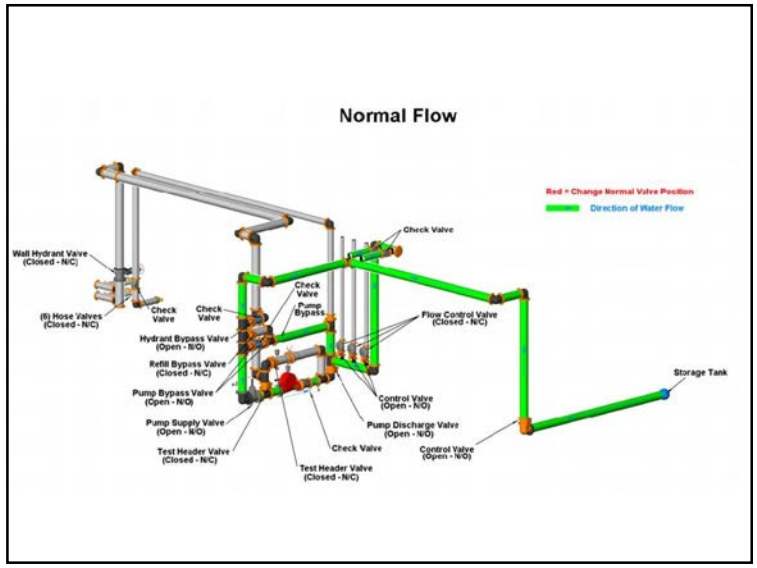
Normal Flow
Red = Change Normal Valve Position
Direction of Water Flow
Wall Hydrant Valve (Closed - N/C)
(6) Hose Valves (Closed - N/C)
Check Valve
Check Valve
Check Valve
Pump Bypass
Hydrant Bypass Valve (Open - N/O)
Refill Bypass Valve (Closed - N/C)
Pump Bypass Valve (Open - N/O)
Pump Supply Valve (Open - N/O)
Test Header Valve (Closed - N/C)
Test Header Valve (Closed - N/C)
Check Valve
Flow Control Valve (Closed - N/C)
Control Valve (Open - N/O)
Pump Discharge Valve (Open - N/O)
Control Valve (Open - N/O)
Storage Tank

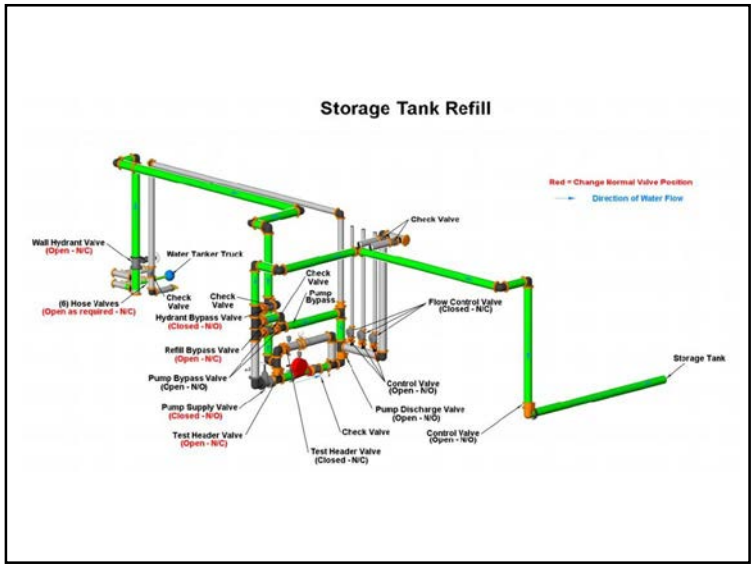
Storage Tank Refill
Red = Change Normal Valve Position
Direction of Water Flow
Wall Hydrant Valve (Open - N/C)
Water Tanker Truck
(6) Hose Valves (Open as required - N/C)
Check Valve
Check Valve
Check Valve
Pump Bypass
Hydrant Bypass Valve (Closed - N/O)
Refill Bypass Valve (Open - N/C)
Pump Bypass Valve (Open - N/O)
Pump Supply Valve (Closed - N/O)
Test Header Valve (Open - N/C)
Test Header Valve (Closed - N/C)
Check Valve
Flow Control Valve (Closed - N/C)
Control Valve (Open - N/O)
Pump Discharge Valve (Open - N/O)
Control Valve (Open - N/O)
Storage Tank

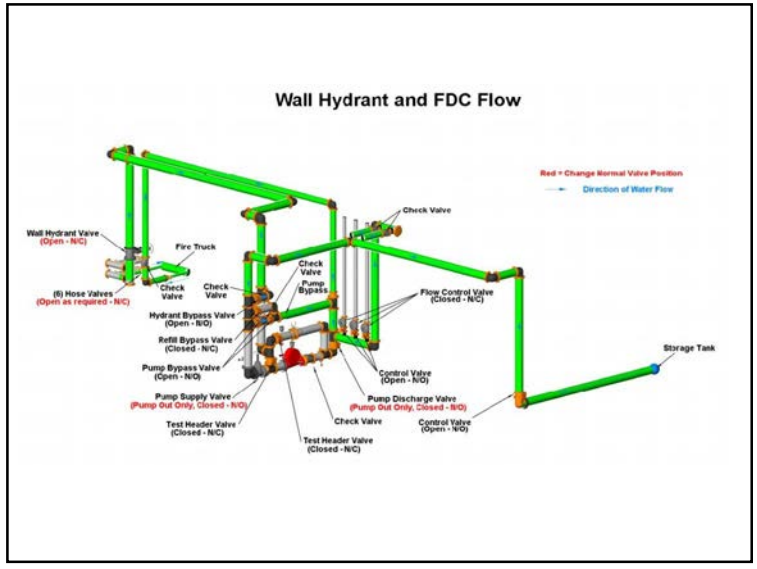
Wall Hydrant and FDC Flow
Red = Change Normal Valve Position
Direction of Water Flow
Wall Hydrant Valve (Open - N/C)
Fire Truck
(6) Hose Valves (Open as required - N/C)
Check Valve
Check Valve
Check Valve
Pump Bypass
Hydrant Bypass Valve (Open - N/O)
Refill Bypass Valve (Closed - N/C)
Pump Bypass Valve (Open - N/O)
Pump Supply Valve (Pump Out Only, Closed - N/O)
Test Header Valve (Closed - N/C)
Test Header Valve (Closed - N/C)
Check Valve
Flow Control Valve (Closed - N/C)
Control Valve (Open - N/O)
Pump Discharge Valve (Pump Out Only, Closed - N/O)
Control Valve (Open - N/O)
Storage Tank

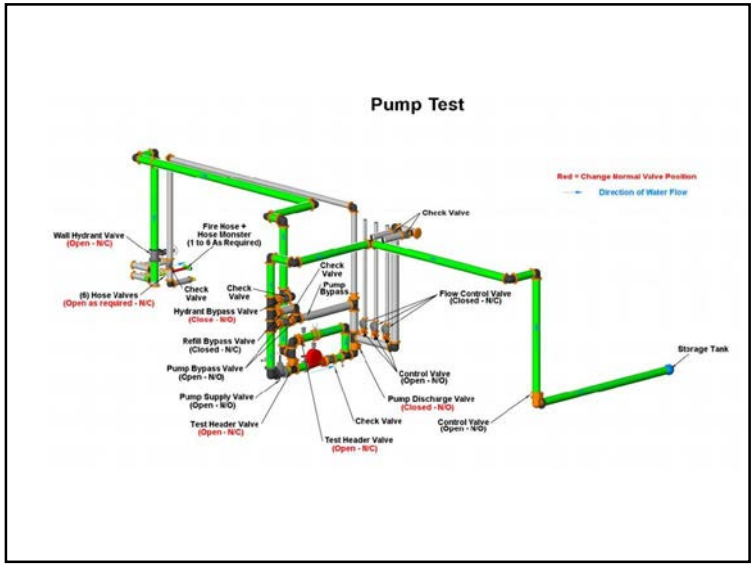
Pump Test
Red = Change Normal Valve Position
Direction of Water Flow
Wall Hydrant Valve (Open - N/C)
Fire Hose + Hose Monster (1 to 6 As Required)
(6) Hose Valves (Open as required - N/C)
Check Valve
Check Valve
Check Valve
Pump Bypass
Hydrant Bypass Valve (Close - N/O)
Refill Bypass Valve (Closed - N/C)
Pump Bypass Valve (Open - N/O)
Pump Supply Valve (Open - N/O)
Test Header Valve (Open - N/C)
Test Header Valve (Open - N/C)
Check Valve
Flow Control Valve (Closed - N/C)
Control Valve (Open - N/O)
Pump Discharge Valve (Closed - N/O)
Control Valve (Open - N/O)
Storage Tank

THANK YOU

Western States Fire Protection Co.

Protecting Lives and Property

7026 S. Tucson Way
Centennial, CO 80112
(303) 792-0022 Fax (303) 792-9049

Operations Plan

EJMT FFSS Design Build Project
Project No. C 0703-360, Subaccount 17810

Prepared by:
John Hulett
Project Manager
26 November 2015

OPERATIONS PLAN
INDEX

1. **Forward**

2. **System Narrative**

3. **Sequence of Events**

4. **Laminated Instructions**

EJMT FP DRAWING NARRATIVE

The fixed fire suppression system (FFSS) is supplied by the existing water storage tank fed from straight creek, north of the west portal. A new 10-in underground pipe will be installed from the existing tank to within close proximity of the portal where the existing 8-in domestic and standpipe is supplied. The line will tee into the existing at this point and reduce down to 8-in to supply the new 1,250 gpm electric fire pump located in the west ventilation building.

The water supply to the fire pump was hydraulically calculated. This calculation assumes the worst case scenario with the tank empty. The additional 5 psi static pressure available when the tank is full was not utilized. The adjusted water supply to the fire pump suction flange is 56.9 psi static pressure with 49.6 psi at 1,250 gpm. This adjustment includes the additional 500 gpm hose allowance for the existing standpipe system. The total flow for this calculation is 1,750 gpm.

The 115 psi @ 1,250 gpm fire pump is sized to provide the required pressure and flow for any two deluge systems flowing at the same time. The most demanding system is the Eisenhower 3 nozzle system with a flow of 1,264.7 gpm. All deluge system hydraulic calculations provide at least a 10% pressure safety factor to allow for minor installation changes.

The fire pump assembly will be provided with both a flow meter and a test header. The flow meter allows testing the performance of the fire pump by flowing water back to the pump suction. The test header is required for the acceptance test and to verify the water supply from the tank every 5 years. The flow meter can be used 4 out of 5 years with the benefit of not flowing and wasting water outside the building from the test header.

A new wall hydrant will be provided close to a new fire department connection (fdc) at the northwest corner of the west ventilation building. The wall hydrant can supply a fire pumper truck that can supplement the water pressure within the FFSS through the FDC. The wall hydrant will also serve as the pump test header when required. An FDC will not be provided at the east ventilation building because there is no water supply from which a pump truck could draw to supply additional water to the FFSS. Just to clarify, a fire pumper truck is not required for the operation of the system but a responding fire department could assist in the event of a fire by supplementing or replacing the fire pump.

During winter months a water truck may not be able to access the water tank for re-supply. An arrangement of valves with a bypass that is normally closed will be provided to allow a water truck located below at the northwest ventilation building to fill the water supply tank utilizing the fire pump.

In the event of a power outage, the fire pump controller is equipped with an automatic transfer switch to allow operation from the emergency generator. Additionally the fire pump controller is of the soft start type to reduce the inrush demand on the emergency generator.

There are 183 deluge systems providing coverage over the tunnel roadway. There are 90 systems in the Eisenhower tunnel and 93 systems in the Johnson tunnel. Three (3) of the deluge valves are located within the fire pump room. The remainders of the deluge valves are located on the 6-in. X 18,100 ft. Loop located within the supply plenums and the fan deck of the ventilation buildings. The capacity of the 6-in. Loop is approximately 30,000 gallons.

Ten (10) 6-in. Isolation valves will be provided on the 6-in x 18,100 ft. Loop. These valves will allow system repairs if required to occur without draining the entire system. Each of these valves will have a tampers switch. In the event a valve is closed, a trouble signal will be displayed at the fire control panel (fcp).

Boilers, expansion tanks, and circulation pumps will be provided within the fire pump room to heat the 6-in. Loop piping. The system heat will provide protection of the zone deluge valves located within insulated valve enclosure (ive) cabinets installed around each zone valve in the plenum. The valve enclosure will be heated by convective heat transfer from the circulating hot water in the 6-in. Wet supply loop. The heated water will be directed east thru the supply plenum of the eisenhower tunnel where it will cross through the east ventilation building on the fan deck and return west within the supply plenum of the johnson tunnel.

In the event of a fire, the water supply to the deluge systems can then travel east thru both supply plenums to the activated deluge system allowing water to discharge from the nozzles.

There are four different types of deluge systems within the project. Each system is designed to provide at least 0.16 gallons per square foot over the roadway while two systems are flowing. The hydraulic calculations provided are for the most demanding area for each system type. The location was determined by changing the hydraulic location until the most demanding condition was found.

The differences between each of the system types include the size, nozzle type, spacing, pressure, and flow. Each system is similar in that it provides the density of 0.16 gallons per square foot. All of the deluge systems will have a manual isolation valve with a tamper switch. In the event a valve is closed, a trouble signal will be displayed at the fire

Control panel (fcp). In the event a deluge system is actuated, a pressure switch will indicate an alarm at the fcp.

The deluge valve assemblies are located approximately every 100 feet in the eisenhower supply plenum and 96 feet in the johnson supply plenum. Each deluge system is controlled by a 4-in. Flow control valve. This valve is held in the closed position by a small prime line. The upstream system water pressure holds the valve closed and when a solenoid valve is opened by a 24 volt current from the fcp. The flow control valve will open. When the solenoid valve is closed, the valve will close. Additionally, the flow control valve can operate like a pressure reducing valve allowing for adjustment of the downstream pressure. With this feature, a higher upstream pressure will not over flow which would effectively reduce the minimum water supply duration of one hour.

A 4-in. Cross main will supply the branch lines that supply the assorted nozzles. The 4-in. Cross main will need to penetrate the plenum wall for each tunnel system to allow access to the exhaust plenum vents. With each deluge system located below the valve assembly all cross mains and branch lines will be required to drain automatically to avoid trapped water that could freeze within the pipe. The branch line pipe will automatically drain from nozzles. The cross main will require a ½- in ball drip that will automatically drain to the plenum floor. The ball drip will automatically open after the system is shut down and the pipe is no longer pressurized.

The eisenhower tunnel has two types of deluge systems. Both systems have the same large bete nozzles with the difference being three (3) nozzles verses (4) nozzles. The three nozzle system requires more pressure at each nozzle to provide the 0.16 gallons per square foot to the roadway below. The location of the nozzles is determined by the existing plenum vents within the exhaust plenum.

The Johnson tunnel deluge systems utilize twelve (12) smaller BETE nozzles to provide the 0.16 gallons per square foot to the roadway below. The location of the nozzles is determined by the existing vents within the supply and exhaust plenum.

The ventilation building deluge systems utilize twelve (12) horizontal sidewall sprinklers as nozzles to provide the 0.16 gallons per square foot to the roadway below. The branch lines supplying the nozzles at the portals will be exposed on the wall just below the lights. To address concerns regarding corrosion from anti-ice spray that can become airborne from the roadway at the ventilation buildings, we are providing galvanized pipe for the branch lines and nozzles with a corrosion resistant coating.

Custom brackets and trapeze supports will be provided within the supply plenum to support the 6-in. Loop piping. These supports will be located at a maximum of 12.5 ft. On center. The entire 6-in. Loop piping will be provided with 1-½-in fiberglass insulation with a k-value of 0.23. Additionally, rigid 1-½-in insulated pipe supports will be provided for all hangers and supports.

The valve assembly for each deluge system will be inside an air tight ive. The ive's are provided with 3-in rigid insulation with an r-value of 18. The ive's will have an access door allowing for ease of inspection, testing, and maintenance.

The 6-in. Loop piping and its supply will be seismically braced. Calculations are provided within the drawings for the most demanding longitudinal and lateral brace requirements. Longitudinal braces will be provided at 100 ft. Maximum distances within the supply plenum and will be located as close as possible to the valve assemblies. Each of the custom brackets and trapeze supports within the plenum serve as lateral braces at 12.5 ft. Maximum on center. The loop and supply piping within the portals will be braced by standard methods with longitudinal braces at 80 ft. Maximum and lateral braces at 40 ft. Maximum and located within 1 ft. In a change of direction. All risers or vertical piping will be provided with four-way bracing in accordance with nfpa-13.

A 4-in. Pressure relief valve will be provided at the southeast ventilation building to provide protection of system components from the potential of water hammers that may occur. Water hammer is used to describe a pressure surge that is caused when a fluid is forced to stop or change direction suddenly. The potential for water hammer exist when a deluge valve is closed.

Each tunnel, and their respective air plenums, curve north and south through the mountain and change in elevation increasing from east to west. The curvature of the tunnels occurs slightly over a large distance making the installation of additional fittings and swing joints unnecessary. The deflection is minimal but must be addressed.

In addition, the air plenums are subject to freezing temperatures in the winter months. To prevent the water in the pipe from freezing, hot water starting at 100°f with a maximum design boiler temperature of 130°f, will be circulated through the 6-in. Main supply loop. Main piping will be installed when temperatures have the potential to be -30°f. The worst case temperature change was calculated to be from -30°f to 130°f. Due to drastic changes in temperature, the 6-in. Pipe will expand and contract. When the pipe is to be installed during the cold weather seasons or when cold water from the storage tank is introduced into the pipe during a fire or testing situation, the steel pipe will shrink. When the hot water is circulated through the pipe, the steel pipe will expand. The expansion from the change in temperature will cause a parallel deflection that is addressed in this design.

To accommodate changes in the pipe length and direction, expansion and deflection will be addressed continually for every stick of pipe along the entire length of the tunnel by using Victaulic style 75 flexible couplings and Victaulic style 155 expansion joint 6-in. Nipples. Through product data as well as expansion and deflection calculations for a 25 ft. Section of pipe, a solution was determined to provide expansion joints to accommodate the expansion and deflection within each 25 ft. Section of pipe.

Expansion joints shall be installed at each end of pipe approximately every 25 ft. An expansion joint will consist of (2) style 75 couplings with (1) style 155 6-in. Schedule 40 nipple, 4 inches in length between the couplings. Each expansion joint will be installed in cold weather conditions, thus each coupling shall be installed to separate the two ends of the pipe to allow for maximum possible separation. When the pipe expands due to hot water, there will be zero deflection between each piece of pipe. The expansion joint will provide 0.346-in. Of expansion which exceeds the required thermal expansion length of 0.3216-in.

When angular deflection is required, an additional coupling and nipple shall be added to accommodate the angular deflection between the couplings that are provided for the expansion joint. This coupling will not be able to deflect in the parallel direction and will not be used as an expansion coupling.

In addition, two brackets shall be provided for each 25 ft. Length of pipe. Both brackets shall be braced to allow minimal deflection between each 25 ft. Stick of pipe. A longitudinal brace shall be installed every 100 ft. with the braced support closest to the insulated valve enclosure to limit movement at the deluge valve assemblies and to provide the required seismic bracing.

OPERATIONS
Sequence of Events

Normal Conditions

1. At least one circulation pump shall be running in the boiler/pump room located in the Northwest portal.
2. No alarm or trouble should be indicated at the fire alarm control panel or FACP. One FACP is located in the command center, another in the office next to the command center, and the third one on the stair mezzanine located within the Northwest portal.
3. The fire pump should not be running. Do not push the green button on the fire pump control panel without verifying the circulation pumps are off line.
4. All fire pump room valves are to be left in their normal positions. A laminated guide to these valves will be located on the fire pump. Changing the normal settings of these valves should provide a trouble signal to the FACP.
6. All valves within the IVE shall be in their normal positions. Laminated instructions will be provided at each IVE indicating the normal position of these valves. If the system isolation valve is closed, a trouble signal will be provided at the FACP.

Fire Event
A Linear Heat Detector (LHD) at the ceiling of tunnel monitors the ceiling temperature. When the threshold of heat is reached the fixed fire suppression system (FFSS) is triggered and the following sequence begins.

1. The heat triggered location is indicated at the fire alarm control panel or FACP. One FACP is located in the command center, another in the office next to the command center, and the third one on the stair mezzanine located within the Northwest portal.

2. The camera's automatically rotate and focuses on that location within the roadway.

3. The heat circulation pump located within the boiler/pump room located in the Northwest portal is turned off by the FACP.

4. The fire pump located within the boiler/pump room located in the Northwest portal is turned on by the FACP.

5. The deluge valve located within the insulated valve enclosure (IVE) in the supply plenum above the roadway that was triggered by heat is opened by the FACP.

6. Water flows out of the open nozzles to the roadway system that was triggered by heat. For example ST-07 is within the South Tunnel and is the seventh system East of the West roadway entrance. Each system is approximately 100 feet long.

7. The water that normally drains from the roadway to the East is diverted. The normally open and labeled roadway drain valve located between the roadways in the basement water treatment plant on the east side is closed by the FACP. See Systems group operations plan.

8. The normally closed drain valve on East side is opened allowing water that drains from the roadway to be diverted to underground tanks. See systems group operations plan.

9. The FACP monitors the underground water supply tank located on the service road North of the West portal. This tank supplies all water to the facility and a one hour water supply for the FFSS. The water level is monitored and when the tank is full there is one hour of water to fight the fire. The tank is monitored to indicate when there is only 30 minutes left to fight the fire. When the tank is empty, the fire pump will be shut down automatically so enough water remains in the system piping to prevent freezing.

10. In the event of a fire, call Western States Fire Protection with a code red at 303-792-0022..

Manual Override
Winds in the tunnel can affect which system actuates. Heat from a fire may actuate a downwind system that is not over the fire. If this occurs, the FACP allows the operator to open another system. The system is designed to turn on and off systems with no more than two systems operating at one time for up to one hour. Training on the FACP will be provided by Systems Group on how to manually override the system.

After a Fire Event

1. Call Western States Fire Protection at 303-792-0022 (This should have already happened)

2. Go to fire pump room at Northwest Portal. Verify the circulation pumps have automatically restarted allowing warm water to circulate in the fire protection loop to prevent freezing.

3. Within the Supply plenum above the roadway visually inspects the inside of the IVE's that enclosed the deluge valves that were opened. Visually inspect the ball drips located on the cross mains between the IVE and the nozzles to verify they automatically drain the trapped pipe.

4. During the colder months it is very importantl to restore circulating hot water to quickly prevent freezing.

5. Check water supply tank level.

6. Return the drain valves on East side to their normal positions. See Systems group plan.

7. Schedule water truck to haul away captured roadway water within the underground water tanks on the east side.

Blowout
In the event water is entering the roadway differently than normal. Although it is unlikely it is possible the 6" loop piping within the supply plenums sprung a leak. Please call Western States Fire Protection at 303-792-0022 so we can evaluate and repair. If more than a leak and the pipe is gushing, go to the boiler/pump room located in the Northwest portal and close the fire pump bypass valve and fire pump discharge valve. These valves are labeled and also shown on the laminated valve positions within the pump room.

LOOP ISOLATION VALVES

THE 6" LOOP IS APPROXIMATELY 18,000' LONG WITH A CAPACITY OF 30,000 GALLONS.
NORMALLY THE CIRCULATION PUMPS FLOW WATER CLOCKWISE AROUND THE LOOP.
IN THE EVENT OF A FIRE, THE FLOW WILL SPLIT TO THE OPEN DELUGE SYSTEMS.
ISOLATION VALVES HAVE BEEN PROVIDED FOR SERVICING THE LOOP. THE ISOLATION VALVES WHICH SHOULD NORMALLY BE OPEN ALLOW THE LOOP TO BE DIVIDED INTO 11 SECTIONS.

LOOP ISOLATION VALVES

6" ISOLATION VALVE

2 1/2" DRAIN VALVE

TRANSITION ISOLATION VALVES

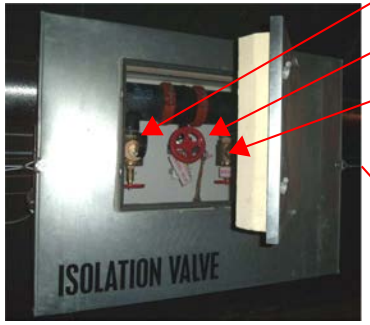

2 1/2" DRAIN VALVE

6" ISOLATION VALVE

2 1/2" DRAIN VALVE

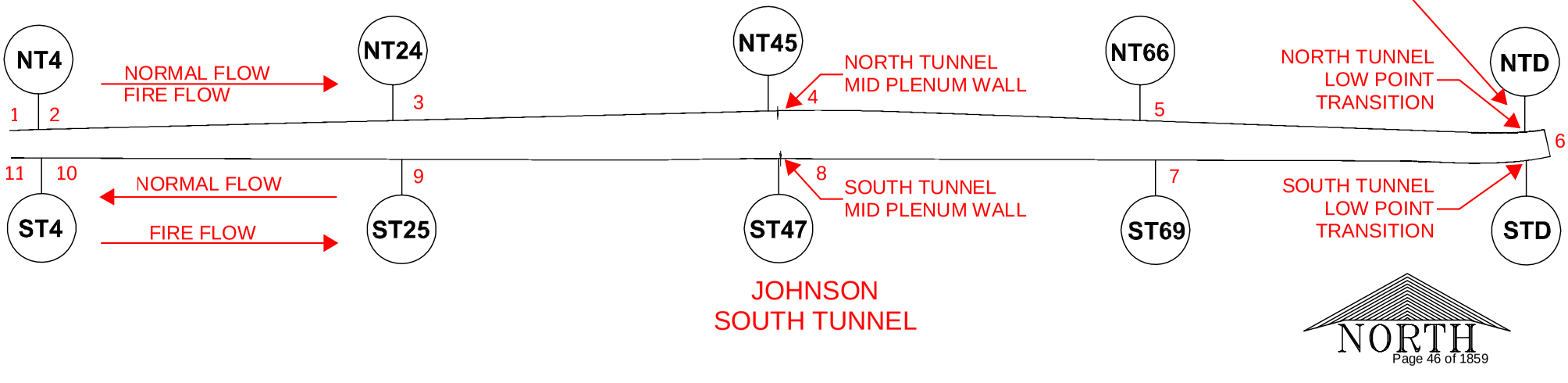

DELUGE SYSTEM FLOW CONTROL VALVE ASSEMBLY

LOCATED WITHIN THE INSULATED VALVE ENCLOSURE (IVE)

SYSTEM ISOLATION VALVE WITH TAMPER SWITCH "NORMALLY OPEN"

PRIME LINE ISOLATION VALVE NORMALLY OPEN "PRESSURIZATION OF THE PRIME LINE KEEPS THE FLOW CONTROL VALVE CLOSED"

SOLENOID VALVE - NORMALLY CLOSED WHEN ELECTRICALLY ACTUATED THE PRIME LINE LOSES PRESSURE AND THE FLOW CONTROL VALVE OPENS

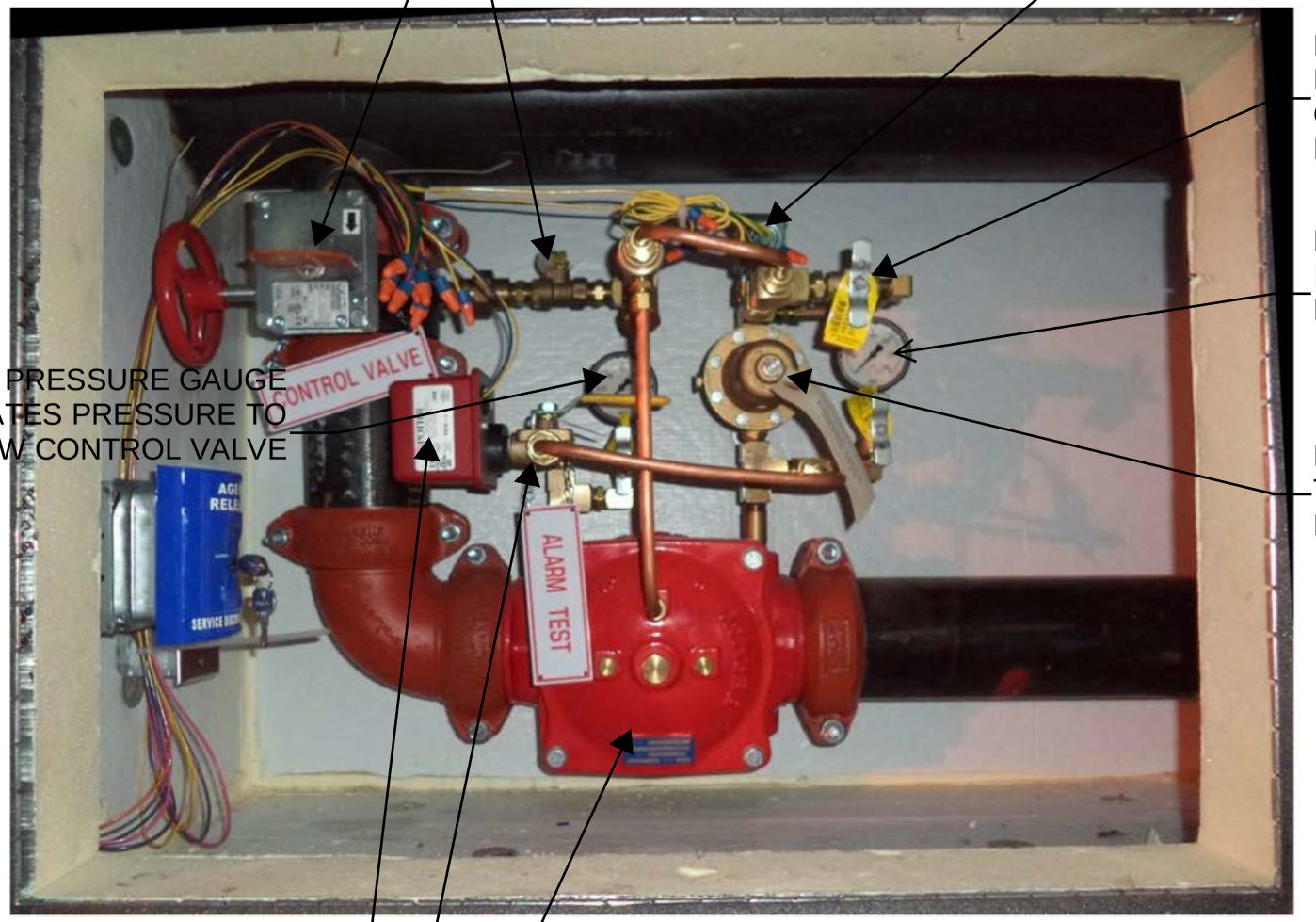

MANUAL RELEASE VALVE IS NORMALLY CLOSED OPENING THIS VALVE WILL CREATE FLOW TO THE ROADWAY BELOW

DISCHARGE PRESSURE GAUGE INDICATES PRESSURE WHEN THE FLOW CONTROL VALVE IS OPEN

PRESSURE GAUGE INDICATES PRESSURE TO FLOW CONTROL VALVE

REGULATOR IS FACTORY SET TO PROVIDE THE REQUIRED DISCHARGE PRESSURE AND FLOW

PRESSURE SWITCH INDICATES FLOW AT THE FIRE ALARM PANEL WHEN THE FLOW CONTROL VALVE IS OPENED

FLOW CONTROL VALVE IS A PRESSURE REGULATING VALVE THAT CAN BE REMOTELY OPENED AND CLOSED BY THE SOLENOID VALVE

ALARM TEST VALVE - NORMALLY CLOSED VALVE IS USED TO TEST THE PRESSURE SWITCH

SOUTH TUNNEL CONTROL VALVE ASSEMBLIES ARE OPPOSITE OF NORTH TUNNEL

PRESSURE RELIEF VALVE ASSEMBLY

LOCATED WITHIN THE INSULATED VALVE ENCLOSURE (IVE)

PRESSURE RELIEF VALVE ALLOWS HIGH PRESSURE TO BE RELEASED FROM THE FFSS WHEN PRESSURE EXCEED SYSTEM WORKING PRESSURE

LOW POINT AUXILIARY DRAIN "NORMALLY OPEN" 2 FULL TURNS

PRESSURE REGULATOR IS FACTORY SET TO RELIEVE THE FFSS WHEN PRESSURE EXCEEDS 255-265 PSI

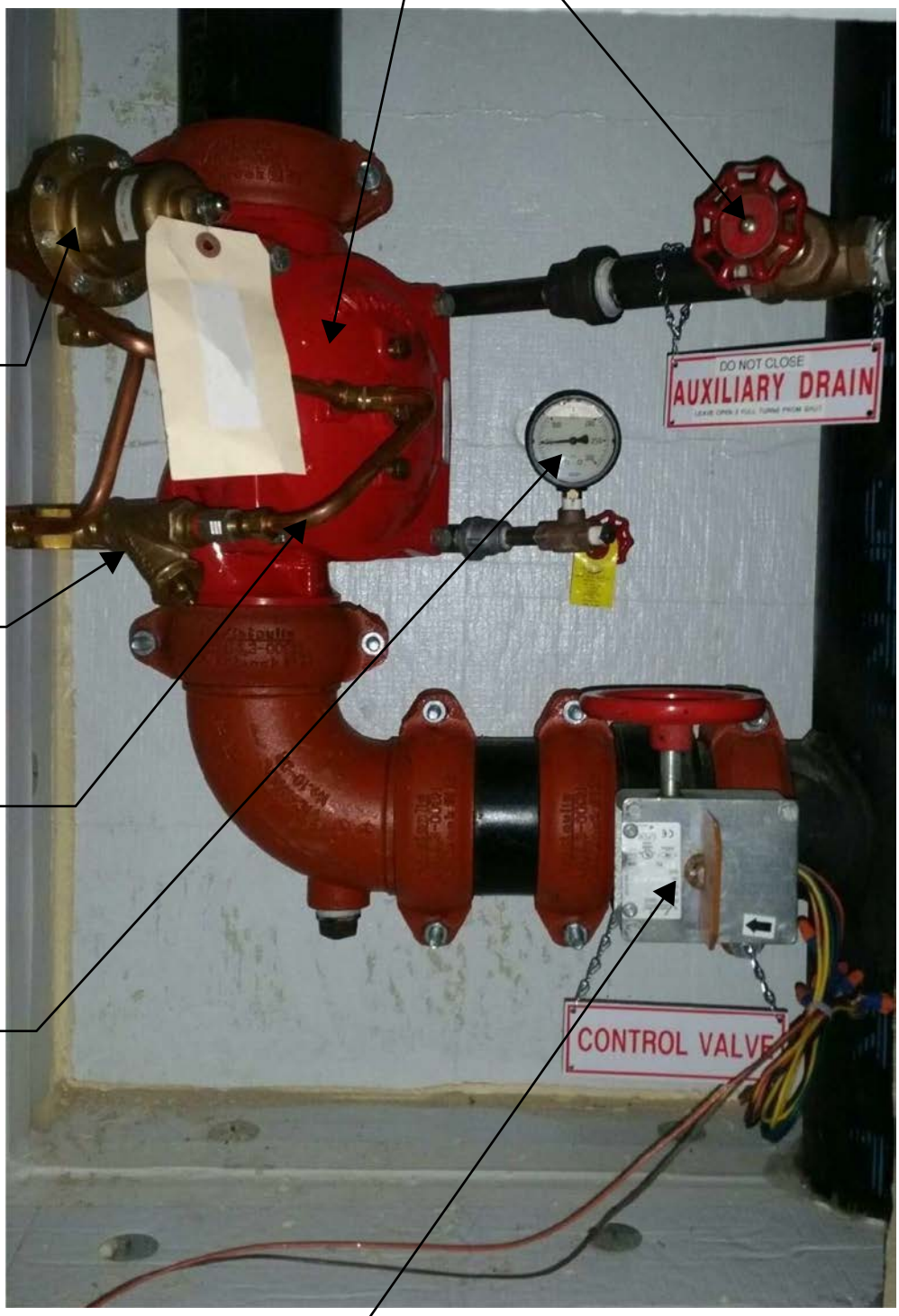

STRAINER

PRIME LINE "PRESSURIZATION OF THE PRIME LINE KEEPS THE PRESSURE RELIEF VALVE CLOSED"

SUPPLY PRESSURE GAUGE

SYSTEM ISOLATION VALVE WITH TAMPER SWITCH "NORMALLY OPEN"

Operation

The BERMAD Model FP 430-UF remains closed as long as the sensed upstream pressure is lower than the adjustable set point. When the Pressure Relief Pilot **[1]** senses upstream pressure **[2]** that is higher than the pilot setting, it acts upon the control chamber **[3]** causing the main valve to modulate open, relieving excess pressure to either a reservoir or sump, thus preventing system over pressure**.** The Pressure Relief Pilot is equipped with an adjusting screw **[4]** to preset the desired upstream pressure, and an integral adjustable needle valve **[5]** to control the main valve closing speed. The valve's unique design provides quick reaction to system demand and keeps pressure loss at a minimum. The control system is equipped with a control strainer **[6]**.

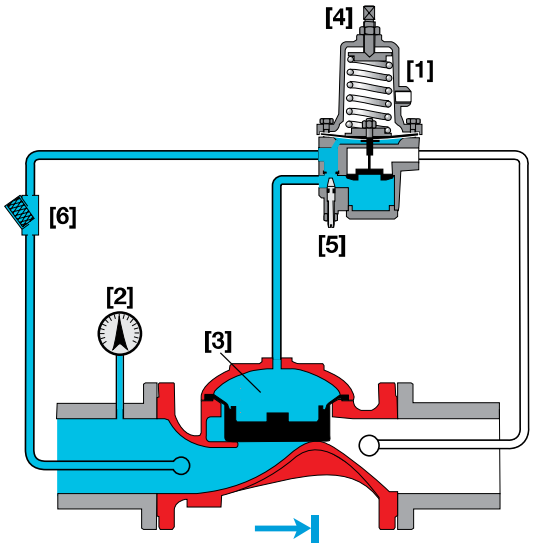

Valve Closed

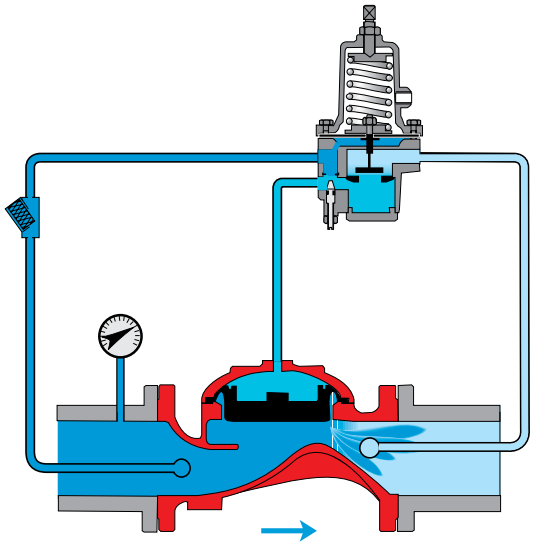

Valve Open (pressure-relief)

Engineer Specifications

The Pressure Relief Valve shall be UL-Listed, FM-Approved, and hydraulic pilot controlled. The main valve shall be an elastomeric type globe valve with a rolling-diaphragm**.**
Valve actuation shall be accomplished by a fully peripherally supported, one-piece balanced rolling-diaphragm, vulcanized with a rugged radial seal disk. The diaphragm assembly shall be the only moving part.
The valve shall have an **unobstructed flow path**, with no stem guide or **supporting ribs**.
The valve shall have a removable cover for quick in-line service enabling all necessary inspection and servicing**.**
The pilot system shall be field adjustable, with adjustable valve closing speed integrated into the main valve, hydraulically tested and supplied as an assembly consisting of:

- Relief pilot valve UL-Listed and FM-Approved as part of the assembly with built-in, internal needle valve
- "Y" strainer

The control trim shall be supplied as an assembly, pre-assembled and hydraulically tested at an ISO 9000 and 9001 certified factory.

3.0 FIRE DETECTION AND CCTV SYSTEM

800 E. 64th Avenue #17
Denver, CO 80229
Phone: 303-298-7900
Fax: 303-650-5667

EJMT – OWNER TRAINING – FA, FOLHD, & FA CCTV SYSTEMS – REDUCED VERSION

Fire Alarm System - Workstations

FA System – Block Diagram – Dwg FA3.01

Operator Interface with the EST3 Panels

- EST3 FACP LCD – Operations Manual Chapter 3 & EST3 LCD Data Sheet
    - Password Levels/Privileges – Table 1-1
    - Normal State - Figure 1-1
    - Off-Normal State – Figures 1-2
    - Message Details - Page 16
    - Display Priorities – Page 18
    - Message Processing – Page 19
    - Logical Addressing – Page 25
- EST3 LCD Operating Instructions – Chapter 2
    - LCD Display Module Controls & indicators – Figure 2-1
    - Controls & indicators Functional Description – Pages 30-34
    - Status Reports – Page 35
    - Output States – Page 49
    - Creating Reports – Page 50
        - History Reports – Page 51
    - Setting The Time & Date – Page 53
    - Changing User Access Level passwords – Page 54
    - Restarting Panels – Page 55
    - Clearing Panel History – Page 57
    - Testing Alarm Input Devices - Page 58
    - Testing Signature Devices – Page 60

- Testing the Panel Lamps & Sounder – Page 61

- EST3 System Addressing – Appendix A
  - Addressing is detailed to review what the information from the "Details" Button on the LCD and the Fireworks Display is giving the Operator.
  - Typical Panel Addressing – Figure A-1
  - Panel Module Addressing – Figure A-4
  - Display Module Addressing – Figure A-5
    - In case a switch is inadvertently activated. The switches have blinking lights to identify an activated switch.
  - Device Addressing – Figure A-6
    - This is more commonly utilized for the Operator to disable/enable devices in maintenance situations.
    - Typical Fire Alarm Sequence – Table B-1
    - Typical Alarm Annunciation Sequence – Table B-3
    - Typical Trouble Sequence – Table B-6
    - Typical Alarm Annunciation Sequence – Table B-8

EST3 Control Module/Display Interface – EST3 Control/Display Module Data Sheet

- What are the switches used for?
  - NW Quadrant Deluge Release DISABLE
  - NE Quadrant Deluge Release DISABLE
  - SW Quadrant Deluge Release DISABLE
  - SE Quadrant Deluge Release DISABLE
  - NW Quadrant Deluge Release DISABLE
  - North Tunnel Deluge Release DISABLE
  - South Tunnel Deluge Release DISABLE
  - All Zones Deluge Release DISABLE

- Fire Pump DISABLE
- Fire Pump Restore
- North Drainage Valve Restore
- South Drainage Valve Restore

- Where are they located?
  - East and West Control Rooms & FMO Office
- Why are they installed?
  - To prevent inadvertent water discharge to the Roadway during routine maintenance activities.
- Are there Additional Switches?
  - We have installed a remote LCD Display Module for annunciation purposes at each RCP Panel in the Plenums (1 per Quadrant)
  - We have installed a display/control module for disable function at each RCP Panel in the plenums (1 per Quadrant)
  - The Disable switches are further broken down into 5 or 10 zone areas associated with each FPC Panel to prevent accidental water discharge to the roadway during routine maintenance functions by Systems Group and/or Western States.

Hands On Panel Operation – Demo EST3 Panel or Actual EJMT EST3 Panel

- To be done after classroom session.

<u>EST Installation & Service Manual</u>

- Preventative Maintenance – Chapter 7
  - General – Page 242
  - Preventative Maintenance Schedule – Page 243
  - Signature Device Routine Maintenance – Page 248
  - Signature Detector Cleaning Procedure – Page 251
  - Signature Replacement Procedure – Page 253

- Service and Troubleshooting – Chapter 8
    - Maintenance Philosophy – Page 257
    - System Pseudo Point Description – Table 8-18
    - Local Alarm Pseudo Points – Table 8-19
    - Local Trouble Pseudo Points – Table 8-20
    - Local Monitor Pseudo Points – Table 8-21
    - Signature Module (SLC) Operation – Table 8-26
    - Basic Signature Data Circuit Troubleshooting – Page 291
        - Open Circuit Conditions – Page 291
        - Short Circuit Conditions – Page 292
        - Ground Fault Conditions – Page 293
        - Substituting Known "Good" Signature Series Devices – Pages 295-300
        - Mapping & Mapping Errors – Page 301
        - Device Troubleshooting – Pages 303-304

SIGA-REL Releasing Module – SIGA-REL Technical Reference Manual

- Application Block Diagram – Figure 2
- Automatic Release Sequence – Figure 5
- Manual Release Sequence – Figure 6
- EJMT Application Release Sequence – Dwg FA6.12
- LED indicators – Figure 11 & Table 15
- Typical Wiring Diagram – Figure 12

BPS6A Power Supply – BPS6A Technical Reference Manual

- LED Indicators – Table 1

Typical Wiring Diagrams – Dwg FA6.11 & FA6.13

Operator Interface with the Fireworks Display System – Hands On Demonstration

- Fireworks Display System Operation - Fireworks System Control Printed Help Manual
    - Navigation within the Fireworks System
    - Color Elements of the Fireworks System
- System Operator Capabilities within the Fireworks Display System
    - Adding Custom Messages
    - Manual Control of the Fixed Fire Suppression System Elements
- Simulation of Events within the Fireworks Display System
    - Supervisory Events
    - Pre-Alarm Events (FOLHD Pre-Alarm Zone Condition)
    - Alarm Events (FOLHD Alarm Zone Condition)
    - Trouble Events

<u>FA CCTV System</u>

FA CCTV System Block Diagram – Dwg FA3.02

Operator Interface with the FACCTV Workstations – Avigilon Enterprise Control Center User Guide & Keyboard Commands Spreadsheet

- Log-in – Page 18
- Log Out – Page 19
- Software Application Screen – Pages 20 & 21
- View Live/Recorded Video – Page 21
- Discovering Cameras – Page 24
- Connect/Disconnect Cameras – Pages 25 & 26
- Scheduling – Pages 30-32
- Recording Settings – Pages 32-33
- Users – Pages 33-38

- Groups – Pages 38-40
- Alarms – Pages 41-45
- Data Back-up – Pages 46-47
- E-mail Notification – Pages 55-58
    - Assuming we have a connection to CDOT e-mail.
- Rules – Pages 58-63
- System Log – Pages 63-64
- Camera Set-up – Pages 68-75
- Zoom/Focus – Pages 75-76
- Compression and Image Settings – Pages 76-79
- Manual Recording – Pages 82-83
- Digital Inputs – Pages 83-86
- Keyboard Controls – Pages 91-92
- Site View – Pages 95-97
- Views – Pages 99-100
- Monitor Layout – Pages 100-102
- Maps – Pages 103-107
- Video – Pages 111-113
- Controlling PTZ Functions – Pages 113-115
- Manual Recording – Pages 116-117
- Recorded Video – Pages 117-128
- Search – Pages 137-143
- Export Data – Pages 149-162
- Back-up – Pages 165-166
- Keyboard Commands – Pages 169-176

- Site View – Pages 95-97
- Site View – Pages 95-97

Hands On Panel Operation – Demo Avigilon Software

- To be done after classroom session.

Avigilon Cameras – H3PTZ-DP Installation Guide

- Cleaning – Page 21

FA CCTV Display System Operation

- Navigation within the FACCTV System
    - Manual Camera Controls within the FA CCTV System
- Simulation of Events within the FA CCTV Display System
    - Pre-Alarm Events (FOLHD Pre-Alarm Zone Condition)
    - Alarm Events (FOLHD Alarm Zone Condition)
    - Trouble Events

Question and Answer Period

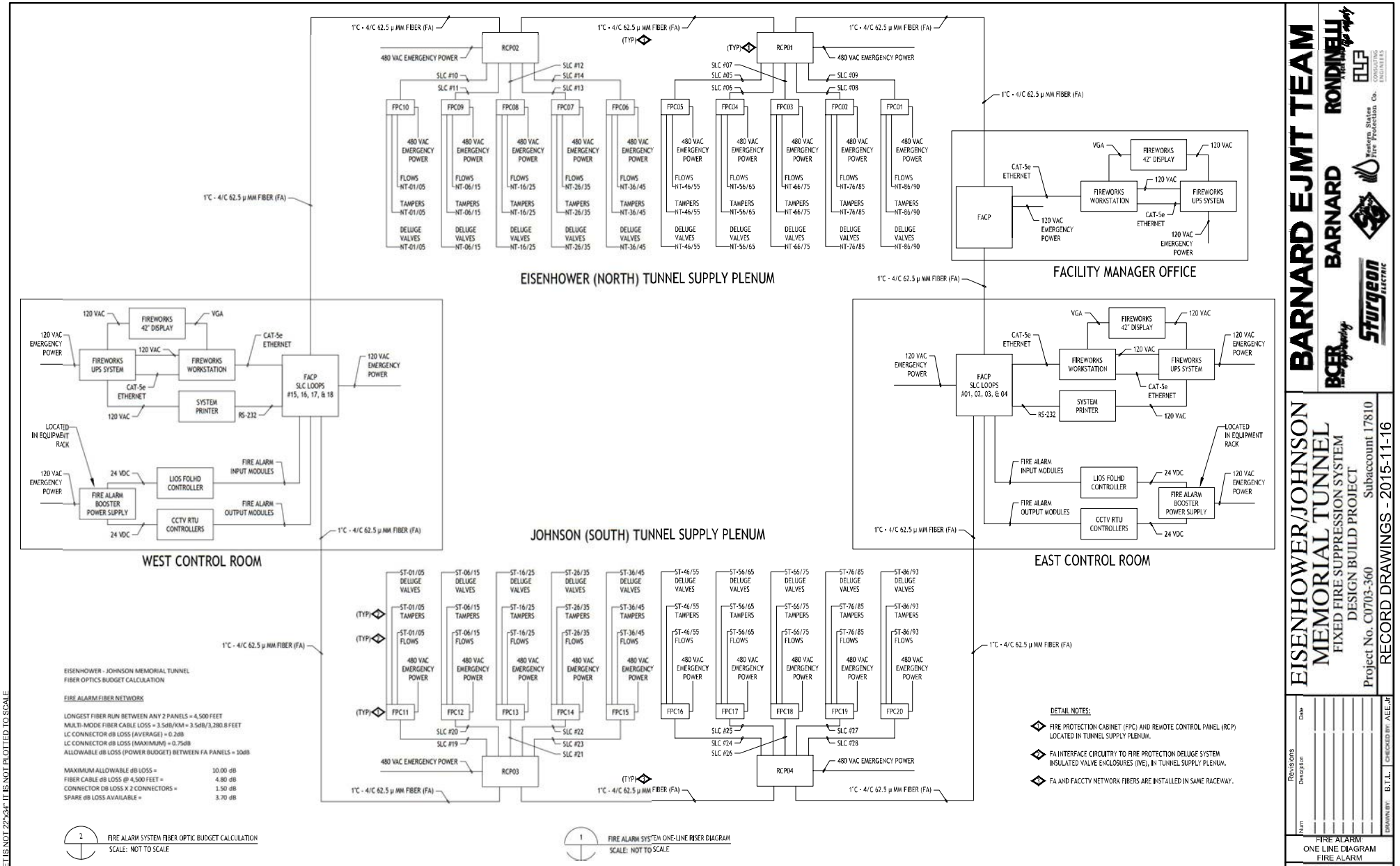

BARNARD EJMT TEAM

RONDINELLI · BARNARD · ALF CONSULTING ENGINEERS · Tedrow Stokes Fire Protection Co. · BCER Engineering · Sturgeon Electric

EISENHOWER/JOHNSON MEMORIAL TUNNEL
FIXED FIRE SUPPRESSION SYSTEM
DESIGN BUILD PROJECT
Project No. C0703-360 Subaccount 17810
RECORD DRAWINGS - 2015-11-16

Num	Revisions Description	Date	DRAWN BY	B.T.L.	CHECKED BY	A.E.E.Jr.

FIRE ALARM
ONE LINE DIAGRAM
FIRE ALARM

Drawing Number
FA3.01

IF THIS SHEET IS NOT 22"X34" IT IS NOT PLOTTED TO SCALE

EST3
System Operation Manual

P/N 270382 • REV 9.0 • ISS 13APR12

DEVELOPED BY	UTC Fire & Security 8985 Town Center Parkway Bradenton, FL 34202 (941) 739-4300
COPYRIGHT NOTICE	© 2011 UTC Fire & Security. All rights reserved. This manual is copyrighted by UTC Fire & Security (UTCFS). You may not reproduce, translate, transcribe, or transmit any part of this manual without express, written permission from UTCFS. This manual contains proprietary information intended for distribution to authorized persons or companies for the sole purpose of conducting business with UTCFS. Unauthorized distribution of the information contained in this manual may violate the terms of the distribution agreement.
TRADEMARKS	Microsoft, Microsoft Mouse, and Windows are all trademarks of Microsoft Corporation.

Content

About this manual • iii
The EST3 library • iv
Important information • v

Chapter 1 **Introduction • 1.1**
Introduction • 1.2
Display operation • 1.5
Message processing • 1.11
Optional features • 1.13
Entering logical addresses • 1.17

Chapter 2 **3-LCD and 3-LCDXL1 operating instructions • 2.1**
Controls and indicators • 2.2
Creating a status report • 2.9
Disabling groups • 2.10
Enabling groups • 2.11
Disabling hardware components • 2.12
Enabling hardware components • 2.13
Arming security partitions • 2.14
Disarming security partitions • 2.16
Resetting security partitions • 2.17
Bypassing security devices • 2.18
Removing bypasses from security devices • 2.19
Guard patrol groups • 2.20
Changing the smoke detector sensitivity level • 2.21
Changing event message routing • 2.22
Changing the output state of a relay or LED • 2.23
Creating reports • 2.24
Setting the system time and date • 2.27
Changing user access level passwords • 2.28
Restarting a panel • 2.29
Scheduling holidays • 2.30
Clearing the panel history file • 2.31
Testing alarm input devices • 2.32
Testing security input devices • 2.33
Testing Signature devices • 2.34
Testing the panel lamps and panel sounder • 2.35

Chapter 3 **3-ASU operating instructions • 3.1**
Controls and indicators • 3.2
Operation the Audio Source Unit • 3.4
Optional audio zone controls • 3.7

Chapter 4 **3-FTCU operating instructions • 4.1**
Controls and indicators • 4.2
Operation • 4.4

Appendix A **System addresses • A.1**
Address format • A.2

LRM addresses • A.4
Control / display module addresses • A.8
Device addresses • A.10

Appendix B **Operation sequence charts • B.1**

Z **Index • Z.1**

About this manual

This manual provides information on how to operate an EST3 integrated system. The information presented here is of a general nature, since each site and system is unique. The EST3 system at your site has been designed by professionals to meet the specific requirements of the fire and security codes in your location. Please refer to the site-specific instructions, provided by your UTCFS representative, to determine the exact operation of your system.

Model number JB-TBZL-EST3, used to describe the EST3 life safety system in the Chinese marketplace, carries the same UL listings and approvals as EST3 when installed and configured using the subcomponents and methodologies described in this manual.

Organization

The manual contains the following chapters:

- *Chapter 1: Introduction:* gives you a general description of system functions and operations.
- *Chapter 2: 3-LCD and 3-LCDXL1 operating instructions:* provides detailed operating instructions for the primary control module, the 3-LCD(XL1) module.
- *Chapter 3: 3-ASU operating instructions:* provides detailed operating instructions for the 3-ASU audio source unit.
- *Chapter 4: 3-FTCU operating instructions:* provides detailed operating instructions for the 3-FTCU firefighter telephone control unit.
- *Appendix A: System addresses:* contains figures that show you how to determine various device addresses.
- *Appendix B: Operation sequence charts:* contains tables or charts that show the sequence of events, actions, and displays for the most common panel operations.

The EST3 library

EST3 documents

A library of documents and multi-media presentations supports the EST3 life safety system. A brief description of each is provided below.

EST3 Installation and Service Manual (P/N 270380): Gives complete information on how to install and service the EST3 hardware. The manual also includes installation information on selected Signature Series components.

SDU Online Help (P/N 180653): Provides full online support for configuring and programming a system using the EST3 System Definition Utility program.

EST3 System Operation Manual (P/N 270382): Provides detailed information on how to operate the system and system components.

EST3 Smoke Management Application Manual (P/N 270913): Provides information for designing, programming, and testing an EST3 smoke control system

EST3 Users Self-Study Course (P/N 270684): Contains a self-paced manual and accompanying video. The course is designed for building personal, security guards, firefighters, and other individuals that may be required to operate the system.

Other documents

In addition to documents in the *EST3* library, you may find the following documents useful.

Signature Series Intelligent Smoke and Heat Detectors Applications Bulletin (P/N 270145): Provides additional applications information on the Signature series smoke and heat detector applications.

Signature Series Component Installation Manual (P/N 270497): Contains detailed mounting and wiring information for all Signature series devices.

Speaker Application Guide (P/N 85000-0033): Provides information on the placement and layout of speakers for fire alarm signaling and emergency voice communications.

Strobe Applications Guide (P/N 85000-0049): Provides information on the placement and layout of strobes for fire alarm signaling.

Important information

Limitation of liability

This product has been designed to meet the requirements of NFPA Standard 72; Underwriters Laboratories, Inc., Standard 864; and Underwriters Laboratories of Canada, Inc., Standard ULC S527. Installation in accordance with this manual, applicable codes, and the instructions of the Authority Having Jurisdiction is mandatory. UTCFS shall not, under any circumstances, be liable for any incidental or consequential damages arising from loss of property or other damages or losses owing to the failure of UTCFS products beyond the cost of repair or replacement of any defective products. UTCFS reserves the right to make product improvements and change product specifications at any time.

While every precaution has been taken during the preparation of this manual to ensure the accuracy of its contents, UTCFS assumes no responsibility for errors or omissions.

FCC warning

This equipment can generate and radiate radio frequency energy. If this equipment is not installed in accordance with this manual, it may cause interference to radio communications. This equipment has been tested and found to comply within the limits for Class A computing devices pursuant to Subpart B of Part 15 of the FCC Rules. These rules are designed to provide reasonable protection against such interference when this equipment is operated in a commercial environment. Operation of this equipment is likely to cause interference, in which case the user at his own expense, will be required to take whatever measures may be required to correct the interference.

Industry Canada information

Note: The Industry Canada label identifies certified equipment. This certification means that the equipment meets certain telecommunications network protective, operational, and safety requirements. Industry Canada does not guarantee the equipment will operate to the user's satisfaction.

Before installing this equipment, users should ensure that it is permissible to be connected to the facilities of the local telecommunications company. The equipment must also be installed using an acceptable method of connection. The customer should be aware that compliance with the above conditions may not prevent degradation of service in some situations.

Repairs to certified equipment should be made by an authorized Canadian maintenance facility designated by the supplier. Any repairs or alterations made by the user to this equipment, or equipment malfunctions, may give the telecommunications company cause to request the user disconnect the equipment.

Users should ensure for their own protection that the electrical ground connections of the power utility, telephone lines, and internal metallic water pipe system, if present, are connected together. This precaution may be particularly important in rural areas.

Caution: Users should not attempt to make such connections themselves, but should contact the appropriate electric inspection authority, or electrician, as appropriate

---

Note: The Load Number (LN) assigned to each terminal device denotes the percentage of the total load to be connected to a telephone loop which is used by the device, to prevent overloading. The termination on a loop may consist of any combination of devices subject only to the requirements that the sum of the Load Numbers of all the devices does not exceed 100.

Chapter 1

Introduction

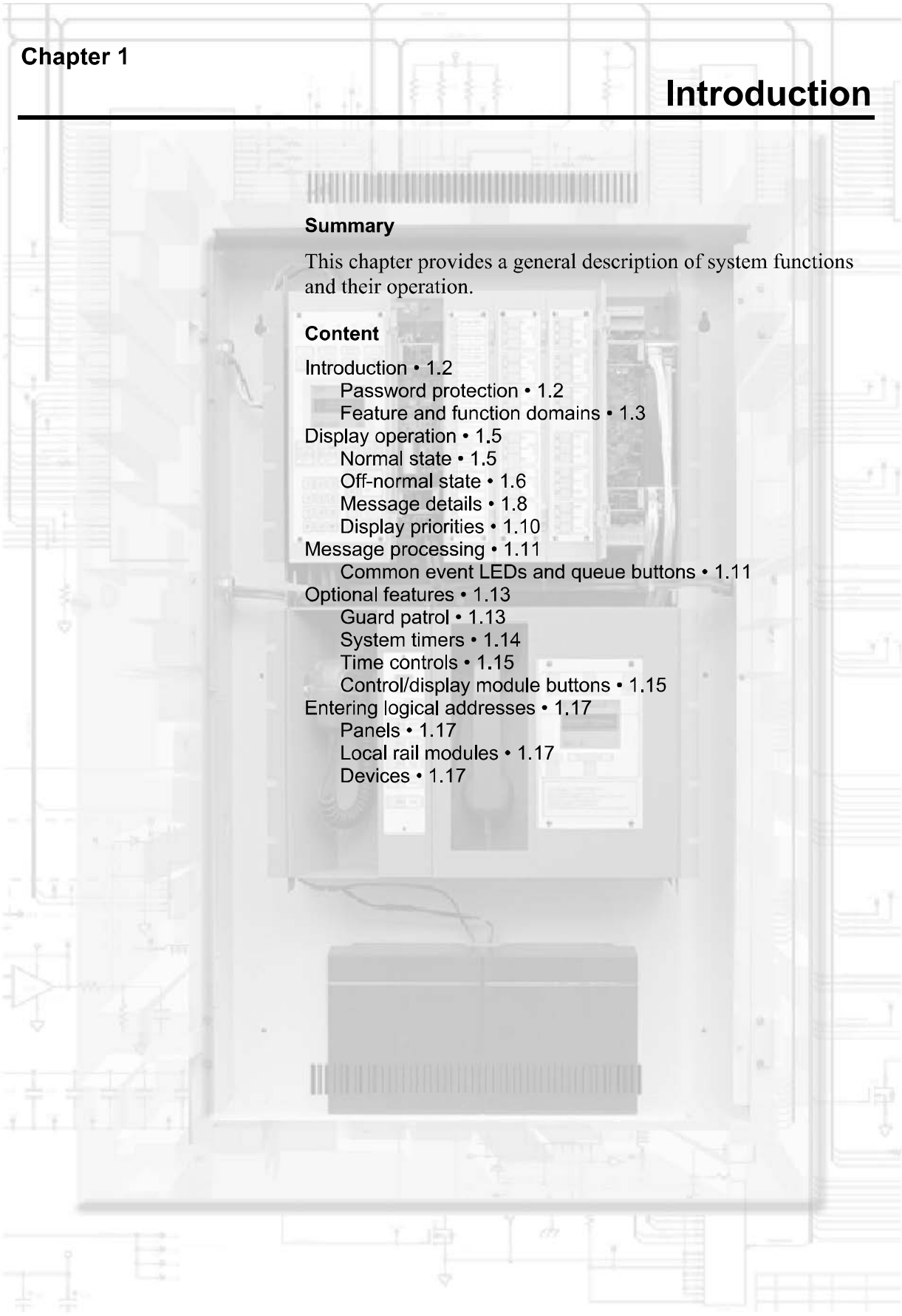

Summary

This chapter provides a general description of system functions and their operation.

Content

Introduction • 1.2
- Password protection • 1.2
- Feature and function domains • 1.3

Display operation • 1.5
- Normal state • 1.5
- Off-normal state • 1.6
- Message details • 1.8
- Display priorities • 1.10

Message processing • 1.11
- Common event LEDs and queue buttons • 1.11

Optional features • 1.13
- Guard patrol • 1.13
- System timers • 1.14
- Time controls • 1.15
- Control/display module buttons • 1.15

Entering logical addresses • 1.17
- Panels • 1.17
- Local rail modules • 1.17
- Devices • 1.17

Introduction

System operating requirements can be configured based on geographic location and protected premises ownership.

In North America, systems can be configured as protected premises (local) systems or as proprietary systems, both in compliance with NFPA 72.

In the local mode, there is no requirement to acknowledge each individual event. Each event message can be reviewed using the Previous and Next buttons. System events that automatically restore will automatically be removed from the message queue, without requiring the operator to view a restored message.

In the proprietary mode, each event must be individually acknowledged by pressing the respective message acknowledge button. The Previous and Next button functions are not available in the proprietary mode. Operators are required to acknowledge both an event and its restoration to remove it from a message queue.

Note: Alarm and supervisory events do not automatically restore. They remain in their respective message queues until the system is manually reset.

Password protection

Certain front-panel controls and command menu functions are password-protected and have a user access level that is determined by the marketplace setting. The four user access levels are detailed in Table 1-1.

Each access level is given a default password that should be changed once the panel is put into service. See Chapter 2: *Changing user access level passwords* for more information.

Table 1-1: Password privileges

Password Level	Privileges
Default No password required	• Status • Revision level report • Output selection • Display/printer selection • Printer selection • Reset function • Alarm silence function • Drill function
User access level 1	All default privileges, plus: • Sensitivity reports • Guard patrol routes (activate/restore)

Table 1-1: Password privileges

Password Level	Privileges
User access level 2	All default and User 1 privileges, plus: • History reports • Devices (enable/disable) • Zone groups (enable/disable) • Alternate sensitivity (activate) • Alternate message route (activate) • Primary sensitivity (restore) • Primary message route (restore) • Change time (program) • Change date (program) • Security devices (bypass/unbypass) • Partitions (arm/disarm) • Change password for level 1
User access level 3	All default, User 1 and 2 privileges, plus: • AND group (enable/disable) • Matrix group (enable/disable) • Service group (enable/disable) • Guard patrol group (enable/disable) • Instruction text (enable/disable) • Time control (enable/disable) • Switch (enable/disable) • LED (enable/disable) • Relay (activate/restore) • LED (activate/restore) • Audio amp (activate/restore) • Audio message (activate/restore) • Holiday list (program) • Change password for level 2
Service access level 4	All default, User 1, 2, and 3 privileges, plus: • Security functions: NONE • Output: Primary printer select • Card (LRM)(enable/disable) • Restart by panel (program) • Restart all panels (program) • Clear history (program) • Test (start/cancel) • Signature Device Test • Change password for level 3

Feature and function domains

The *domain* of a feature or function is the group of cabinets on the network that are affected when the feature or function is activated. Three domains are available:

- Local: The feature/function affects only the cabinet on which the 3-LCD or 3-LCDXL1 display module is installed
- Group: The feature/function affects a pre-defined group of cabinets on the network
- Global: The feature/function affects all the cabinets on the network

A network cabinet may be a part of one or more groups. Multiple control locations are permitted for any group.

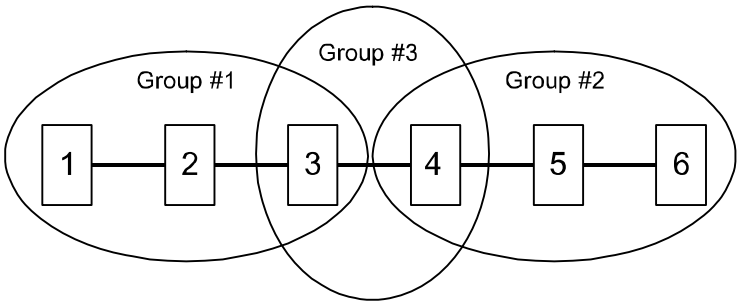

The configuration of features and functions varies with each installation. Please consult your site-specific documentation to determine if any custom features or functions have been designed into your system.

Display operation

The information presented on the main display depends on the operating condition of the panel: normal state (no events present) or off-normal state (at least one event).

Normal state

Figure 1-1 shows the information presented on the main display when the panel is in a normal operating condition.

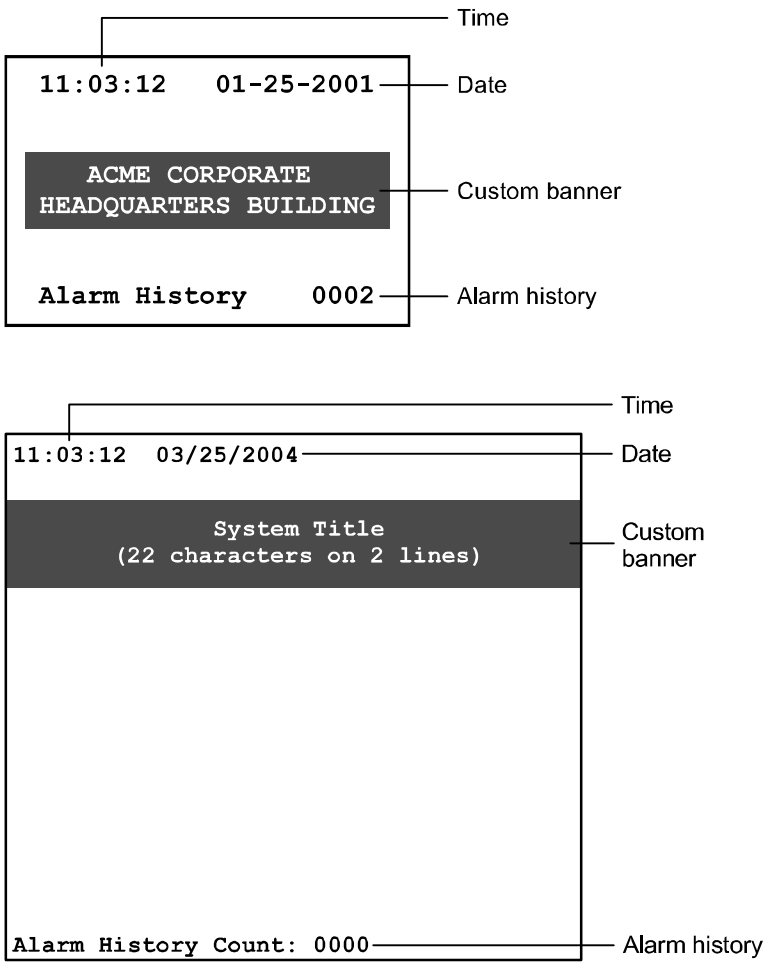

Figure 1-1: Main 3-LCD (top) and 3-LCDXL1 (bottom) display screens when the panel is in a normal state

- The top of the screen displays the system time and date. The time is in 24-hour format. The project configuration settings determine the date format.

- The middle of the screen displays an optional custom banner message, if programmed into the system. Otherwise, this area is left blank.
- The bottom of the screen displays the total number of times that the panel has gone into alarm since the last time the alarm history was cleared.

Off-normal state

Figure 1-2 and Figure 1-3 show the information presented on the main display when the panel is in an off-normal operating condition.

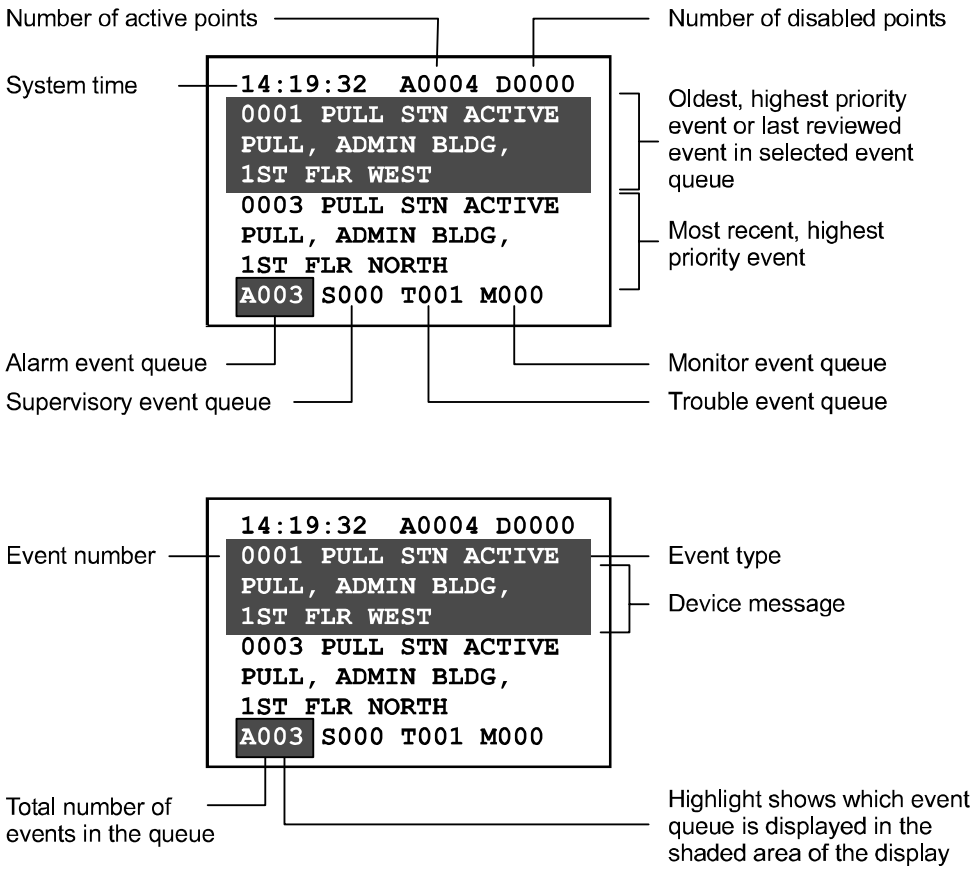

Figure 1-2: Main 3-LCD display screen when the panel is in an off-normal state

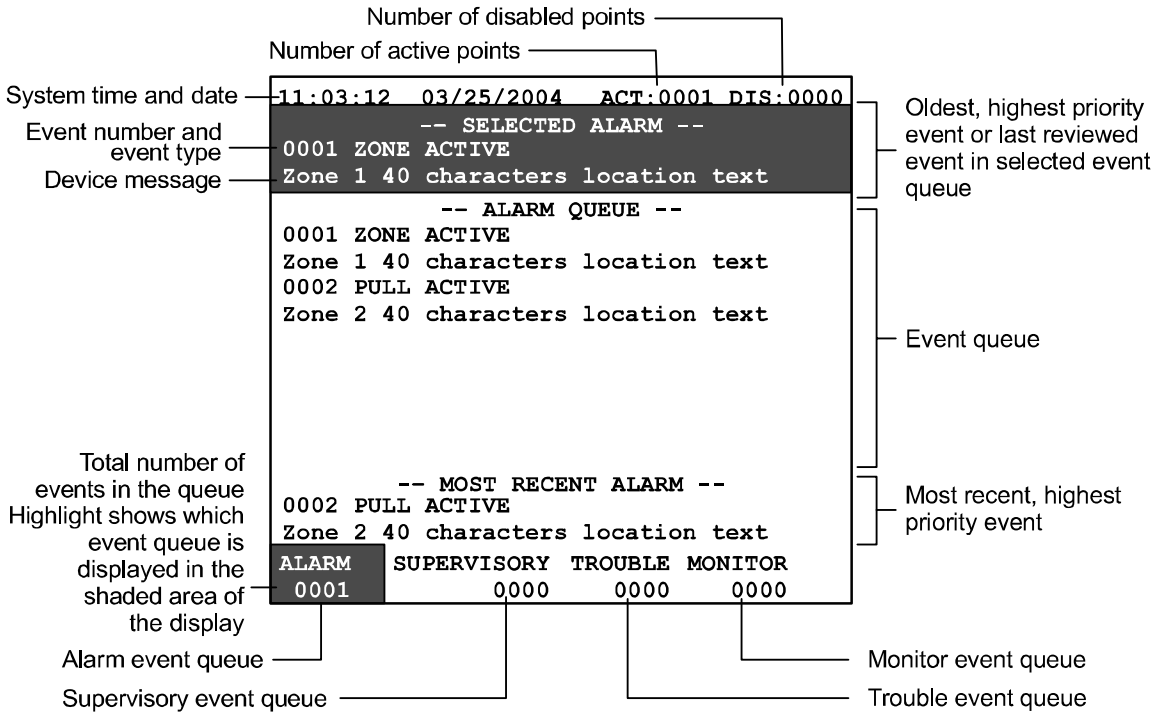

Figure 1-3: Main 3-LCDXL1 display screen when the panel is in an off-normal state

- The top line of the screen displays the system time in 24-hour format, the number of active points in the system, and the number of disabled points.
- The shaded area displays the oldest, highest priority, event received by the panel, or the last reviewed event in the selected event queue, depending on whether the display is in unattended mode (regular off-normal operation) or in attended mode. In either case, the display shows the event number, the event type, and the active device's message.

  Note: Pressing any one of the queue select buttons places the display in the attended mode for reviewing or acknowledging events and prevents the shaded area from being updated by an event with a higher priority. The display automatically returns to the unattended mode after the user timeout period has expired.
- The area immediately below the shaded area on the 3-LCD always displays the most recent, highest priority event in an event queue. This area on the 3-LCDXL1 displays the event queue and the area below the event queue displays the most recent, highest priority event in an event queue.

  Note: Cabinet configuration option settings determine which events are routed to the main display and placed in an event queue.

- The bottom line of the display shows the number of events in each event queue. The highlight around the event counter indicates which event queue is displayed in the shaded area.

  Note: The event counter stops at 999. It is possible for an event queue to hold more than 999 events. If an event queue holds more than 999 events, "***" is displayed.

Message details

Pressing the Details button displays additional information about the event displayed on the LCD. Different detail information is displayed for each of the following:

- Device
- Group
- Guard patrol
- Instruction text

Device details

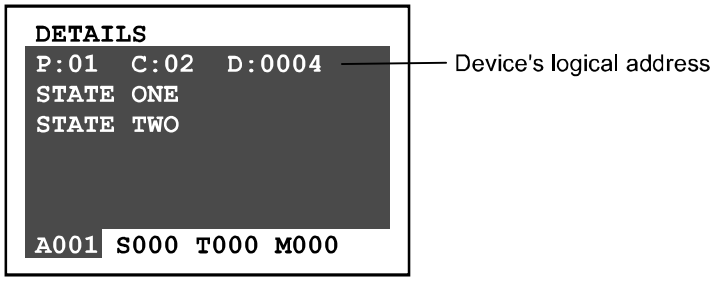

If a device activation causes the event, pressing Details displays the active device's logical address in the following format:

`P:99 C:99 D:9999`

Where:

- P:99 = panel address
- C:99 = rail module address
- D:9999 = device address

Lines below the device address list the off-normal states the device is currently in.

Group details

If a group activation causes the event, pressing Details displays a series of descriptions, one for each device in the group.

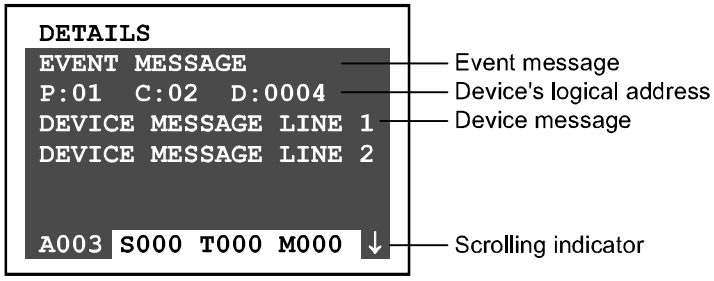

Each device panel shows the event message or state of the device, the device address, and the device message (usually the device location) which can be one or two lines long.

Guard patrol details

When a guard patrol route goes active, pressing Details displays information about the station (device) that is in alarm.

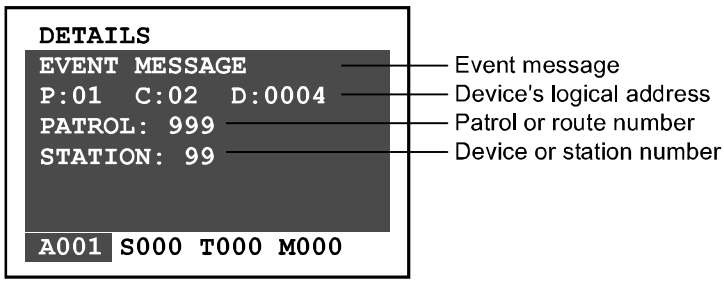

The Details panel shows the event or state of the off-normal station, as well as the logical address, patrol or route number, and station number of the device.

Instruction text details

Your system may be programmed to include detailed instructions for certain events. When specific devices go into alarm, the system generates a related monitor event. If you select the monitor event, then press Details, the instruction text is displayed.

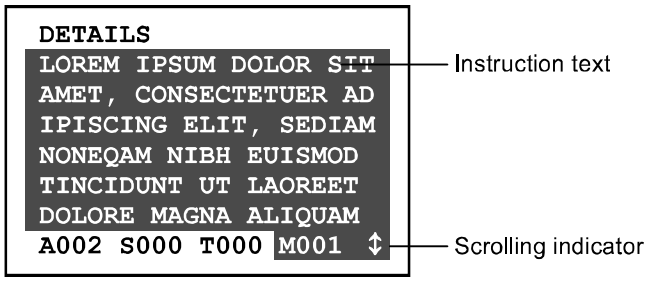

Normally, systems are designed so that instruction text is sent directly to a printer. While accessible, instruction text is not formatted for the display.

Display priorities

The panel controller places all events into one of five categories:

- Fire alarms - life safety related events, e.g. smoke detector, sprinkler system waterflow, manual pull station, etc.
- Security alarms - include burglar and holdup alarms, as generated by security devices
- Supervisory events - off normal conditions of a related fire protection system, e.g. sprinkler system valve closed.
- Trouble events - faults within the system
- Monitor events - changes in the status of an ancillary system

Because events can happen at random, the system prioritizes which event is the most critical and displays its information first. Alarm events have the highest priority and monitor events have the lowest priority.

In the U.S. Local and Proprietary market place, security events have a higher priority than monitor events and are stored in the supervisory queue. For all market place settings other than the U.S. (except the Middle East and Asia, which is the same as the U.S.) Local and Proprietary, security events, and monitor events have equal priority and are stored in the monitor queue.

Message processing

When an event occurs, the system categorizes the event as a fire alarm, security alarm, supervisory event, trouble event, or monitor event. Information about the event is added to a corresponding message queue on the 3-LCD or 3-LCDXL1 display module. The information available in each queue is displayed using the event queue buttons on the front of the LCD.

Note that for display purposes, security alarms and supervisory events are both stored in the supervisory queue.

A panel can store up to 2,000 event messages.

Common event LEDs and queue buttons

The event queue LEDs act as a common event indicator, flashing any time a new event is added to the queue.

Flashing LED indicates that an event is in the queue that has not been reviewed or acknowledged

□ LED on steady indicates that all events in the queue have been reviewed or acknowledged

■ LED off indicates that no events are in the queue

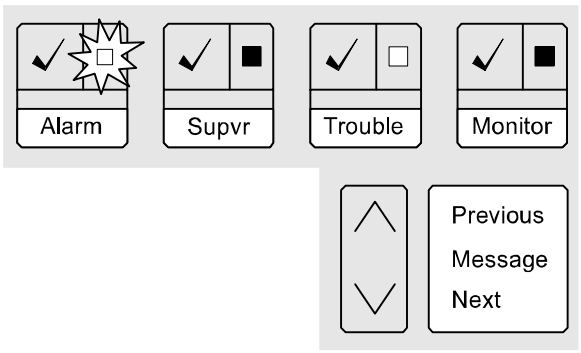

When an event is received, the respective event queue LED flashes, indicating that the event has not been reviewed or acknowledged.

1. Select the highest priority active queue by pressing the respective queue button.
2. Scroll through all available event messages using Previous/Next buttons.

You may use the Previous and Next Message or the queue buttons to scroll through the activation messages at any time after a queue is selected.

Flashing LED indicates that an event is in the queue that has not been reviewed or acknowledged

LED on steady indicates that all events in the queue have been reviewed or acknowledged

LED off indicates that no events are in the queue

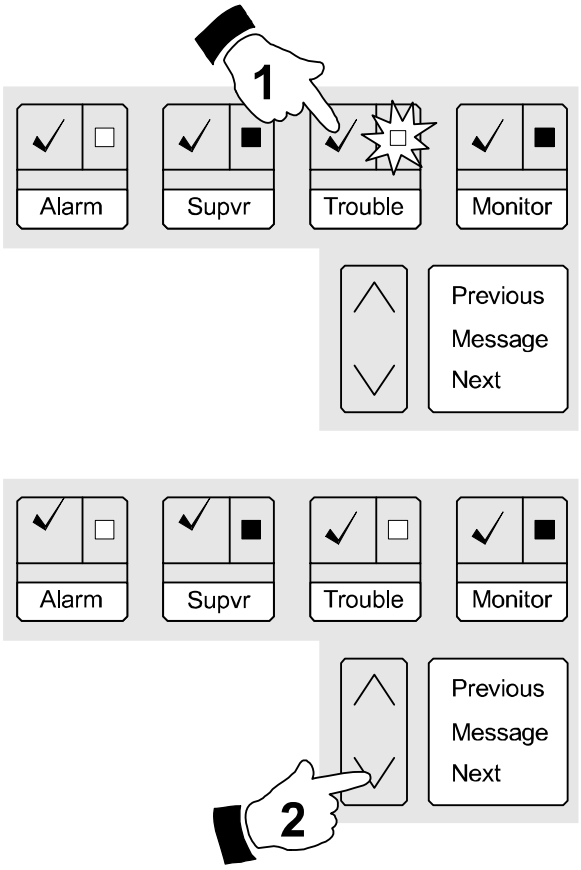

Optional features

The EST3 system can be configured with many optional features that provide additional capabilities. Your system may include some or all of these options, depending on the needs of your facility. See the site-specific information provided by your system installer to determine which options are installed.

Guard patrol

The guard patrol feature is used to monitor the activities of security guards. Guards are required to walk any one of a number of predetermined routes called tours. During each tour, the guard must activate guard patrol stations that are strategically located along the route. Should a guard activate a station too early, too late, or out of sequence, an active guard patrol message will be displayed on the panel LCD.

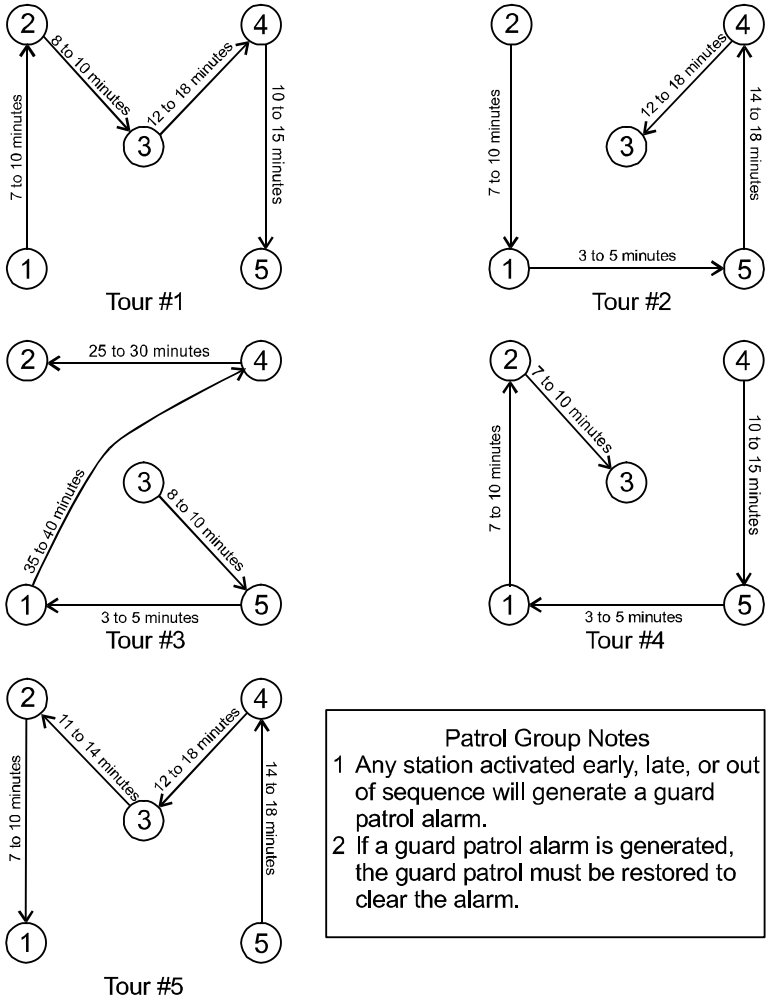

Figure 1-4: Sample guard patrol route assignments

Figure 1-4 shows five guard patrol routes consisting of five stations. The system designer has assigned a minimum and maximum time allowance for the guard to go between any two guard stations. If the guard arrives too early, too late or at the wrong station, an active guard patrol event is generated.

Starting a tour

There are three ways to start a guard patrol tour:

- Activate the first guard patrol station on the route
- Enable the Guard Patrol group from the LCD module (either 3-LCD or 3-LCDXL1)
- Press a control/display panel button programmed to turn on the Guard Patrol group

Note: A guard patrol station designated as the first station in one guard patrol route cannot be the first station in another route.

Ending a tour

A guard patrol tour is automatically ended when all stations on the route have been successfully operated within the allowable time period and in the proper sequence.

Should a tour end with an active guard patrol response, the system must be reset to clear the guard patrol response.

Press the Details button to reveal the stations reporting in.

Clearing a guard patrol alarm

When a guard patrol alarm is generated, you must restore the guard patrol route to clear the alarm. The steps are detailed later in this manual.

System timers

The system has a number of optional timers that are required by certain jurisdictions to comply with fire codes. Most of these timer functions do not require operator action, however, understanding the function of these optional timers (if enabled) will improve your understanding of why the system functions as it does.

Alarm silence/reset inhibit timer

The alarm silence/reset inhibit timer is used to guarantee that the notification appliances will sound for the minimum specified period. This timer effectively disables the alarm silence and reset buttons for a predetermined period. While the timers are active, pressing the alarm silence and reset buttons has no effect.

Notes

- Your system may be equipped with notification appliances associated with the fire sprinkler system, which cannot be silenced.
- Visual notification appliances can be configured *not* to turn off when the audible notification appliances are silenced.

Automatic alarm silence timer

The automatic alarm silence timer is used to automatically silence the notification appliances after a preset period, if they have not been silenced using the alarm silence button. Typical timer settings silence the signals from 5 to 30 minutes after operation.

Automatic general alarm (GA) timer

Some systems can be used to implement a positive alarm sequence. They are designed to permit a short investigation period between the detection of a fire and sending a general alarm to the entire facility. The automatic general alarm timer is used to initiate the general alarm after a predetermined time period, if no action has been taken by the operator to prevent the general alarm from being sent.

Time controls

Time controls provide for the automatic starting and stopping of system events based on time and date. Time controls run in the background and do not require any operator action.

Setting holidays

The system provides for special time controls, referred to as holiday time controls. Holiday time controls supersede the normal time controls on dates that are designated as holidays. The list of dates that are defined as holidays is entered into the system from the 3-LCD or 3-LCDXL1 display module.

Control/display module buttons

The buttons on a control/display module use one of three available operating modes.

- Toggle - The state of the button changes each time the button is pushed, i.e. “off” to “on” or “on” to “off.”
- Interlocked - Three adjacent toggle buttons that operate as a group. Pushing any button in the group turns the output of the other two buttons “off” and turns its own output “on.”
- Momentary - The button is “on” only while pressed by the operator.

You may find multiple button modes on a single control/display module. Consult your site-specific documentation for additional information.

Toggle buttons

Toggle buttons are commonly used to control two state operations such as on/off, open/close, speaker select, telephone select, etc. The output of an "on" button remains "on" during panel reset, and must be manually turned "off" when no longer required.

Interlocked buttons

The interlocked mode is commonly used for *hands-off auto* control of HVAC systems. An interlocked button in the "on" state can be turned "off" without activating a second button by pressing the "on" button a second time. The output of the "on" button remains on, during panel reset, and must be manually returned to "Auto" when no longer required.

Momentary buttons

Momentary buttons are typically to issue brief commands. Example uses for momentary buttons: lamp tests, function reset, and test sequences. The command is issued only while the button is pressed.

Entering logical addresses

Each addressable device or circuit in the system has a logical address. This includes panels, local rail modules, and devices. Depending on the operation you are performing, you will be prompted to enter a logical address in one of several formats.

Tip: Get an SDU Objects report for your system and keep it with this documentation. The SDU Objects report lists all of the addressable devices or circuits in the system and shows their logical addresses.

Panels

The logical address format for a panel is PP, where PP is the cabinet number (01 to 64). For example, enter 01 for the panel designated as Cabinet 1.

(System-wide events that are not related to a particular cabinet use panel number 00.)

To determine a cabinet's panel number, use the Command Menus to request a Status report. Choose any type of list. The system displays the cabinet's panel number as the default panel number. Once you've noted the panel number, press the Backspace key to exit from the function.

Local rail modules

Local rail modules include the rail modules that connect to the local rail bus and the control/display modules. The logical address format for a local rail module is PPCC, where:

- PP is the cabinet number of the panel containing the rail module
- CC is the address of the rail module
- CC+32 is the address of the control/display module connected to the rail module at slot address CC

For example, enter 0102 for the rail module installed in chassis rail 1, slot 4 of Cabinet 1. Enter 0134 for the control/display module connected to the rail module installed in chassis rail 1, slot 4 of Cabinet 1.

Note: The rail-slot number and the slot address are not the same. Slot addresses vary with the cabinet configuration. Refer to *Appendix A: System addresses*.

Devices

Devices include the circuits, buttons, or LEDs that exist on the local rail module and all addressable devices connected by the

field wiring. The address format for a device is PPCCDDDD, where:

- PP is the cabinet number of the panel containing the rail module
- CC is the address of the rail module responsible for the device
- DDDD is the address of the individual component or circuit

For example, Enter 01340129 for the first LED on the control/display module connected to the rail module installed in chassis rail 1, slot 4 of Cabinet 1.

The CRC Card Reader Controller and KPDISP Keypad Display are devices supported by a 3-SAC module. However, they also act as independent processors, and have their own points and pseudo points. For this reason, their device numbers are further subdivided.

You can think of a SAC device as having this address format: PPCCSSDD: SS is the CRC or KPDISP device number, as assigned during LRM configuration. DD is a point or pseudo point within the device.

Chapter 2

3-LCD and 3-LCDXL1 operating instructions

Summary

This chapter provides a functional description of the controls and indicators provided on the 3-LCD and 3-LCDXL1 display modules.

Content

Controls and indicators • 2.2
Creating a status report • 2.9
Disabling groups • 2.10
Enabling groups • 2.11
Disabling hardware components • 2.12
Enabling hardware components • 2.13
Arming security partitions • 2.14
Disarming security partitions • 2.16
Resetting security partitions • 2.17
Bypassing security devices • 2.18
Removing bypasses from security devices • 2.19
Guard patrol groups • 2.20
    Starting a guard patrol • 2.20
    Restoring a guard patrol • 2.20
Changing the smoke detector sensitivity level • 2.21
Changing event message routing • 2.22
    Activating event alternate message routing • 2.22
    Restoring event primary message routing • 2.22
Changing the output state of a relay or LED • 2.23
Creating reports • 2.24
Setting the system time and date • 2.27
Changing user access level passwords • 2.28
Restarting a panel • 2.29
Scheduling holidays • 2.30
Clearing the panel history file • 2.31
Testing alarm input devices • 2.32
Testing security input devices • 2.33
Testing Signature devices • 2.34
Testing the panel lamps and panel sounder • 2.35

Controls and indicators

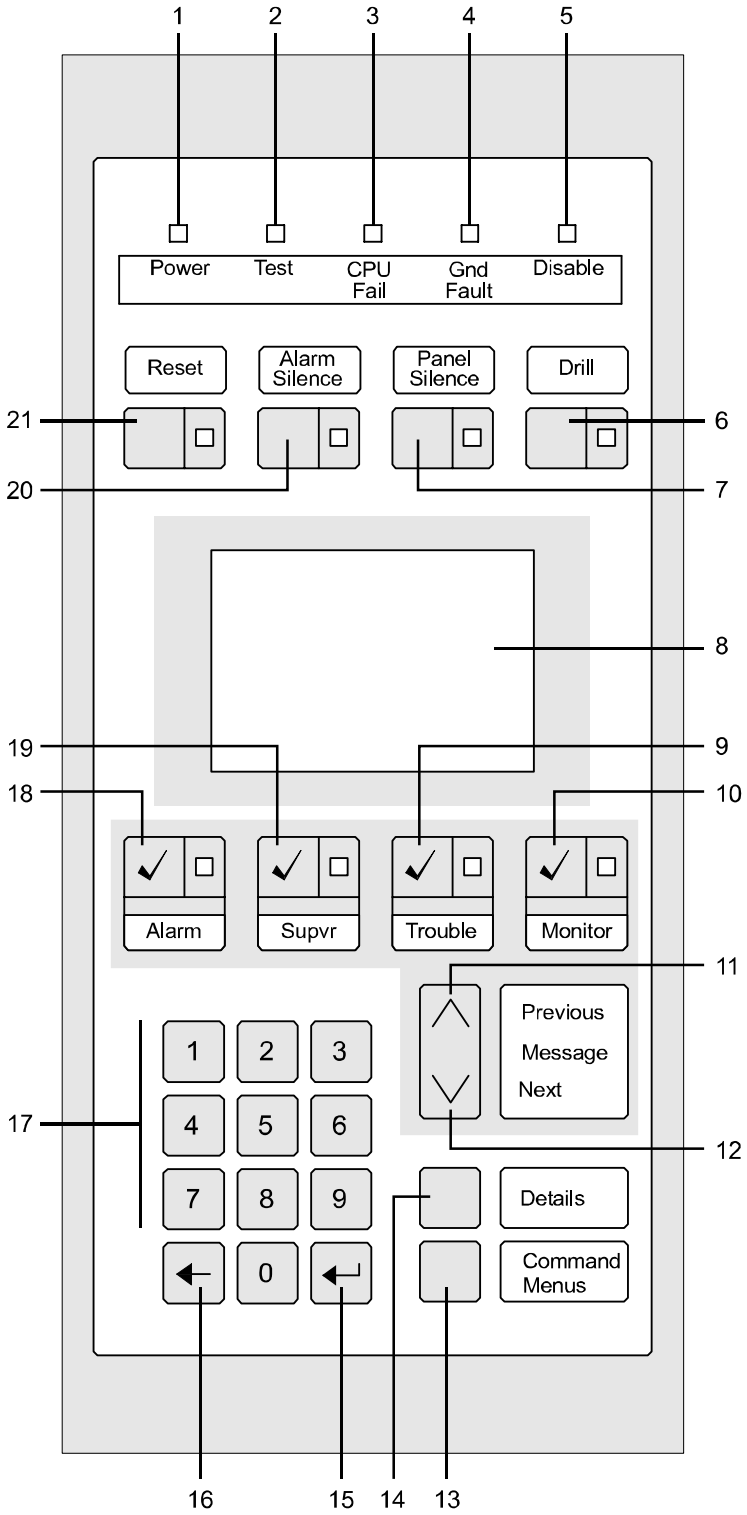

Figure 2-1: 3-LCD controls and indicators

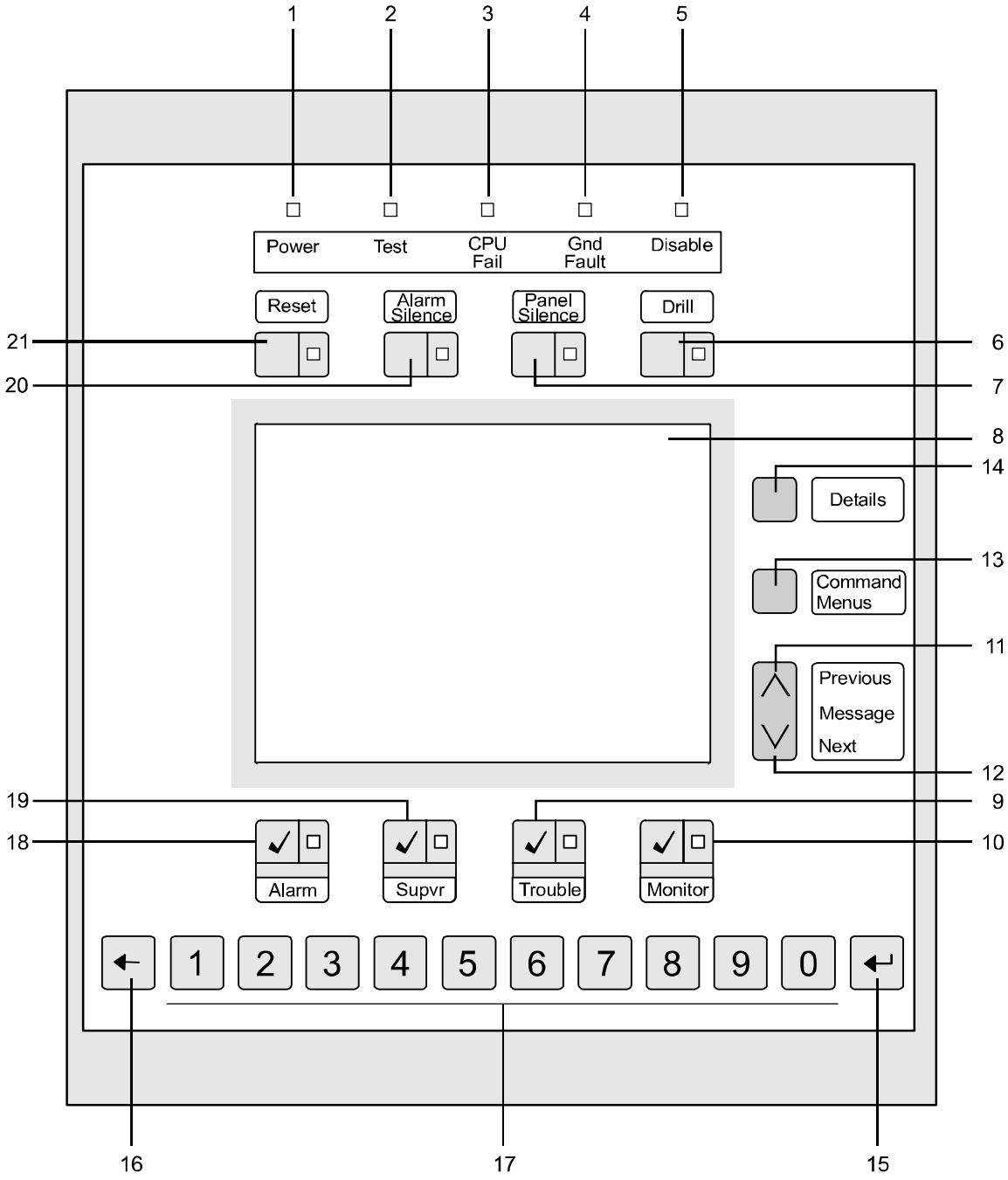

Figure 2-2: 3-LCDXL1 controls and indicators

3-LCD and 3-LCDXL1 controls and indicators (see Figure 2-1 and Figure 2-2)

Index	Control or indicator	Functional description
1	Power LED	The Power LED indicates that mains AC is applied to the panel.
2	Test LED	The Test LED indicates that a part of the system is in test mode. A programmable timer automatically exits the test mode after a period of system inactivity.
3	CPU Fail LED	The CPU Fail LED indicates the CPU module has detected a processor failure. Processor failures must be reset manually.
4	Gnd Fault LED	The Gnd Fault LED indicates that the CPU module has detected a ground fault.
5	Disable LED	The Disable LED indicates that a point or zone has been disabled using the Disable command.
6	Drill Button / LED	Pressing the Drill button activates the Drill command function. The Drill LED, when lit, indicates that the Drill command function is active.
7	Panel Silence Button / LED	For U.S. Local and Canadian Local systems, pressing the Panel Silence button turns the CPU buzzer off. The Panel Silence LED, when lit, indicates the panel is in an off-normal condition and the panel has been placed in Panel Silence mode. For U.S. Proprietary and Canadian Proprietary systems, the Panel Silence button is not operational. The panel buzzer only silences after all events have been acknowledged. **Note:** The CPU buzzer can be configured to resound at a regular interval to remind the operator that the panel has been silenced.
8	Liquid crystal display screen	168 character, backlit alphanumeric display of system status.
9	Trouble Button / LED	Pressing the Trouble button places the contents of the Trouble queue onto the display screen for review. Active trouble events are displayed in the order in which they are received. When a trouble event is highlighted on the display, pressing the Trouble button acknowledges the event and advances the display to the next event. The Trouble LED serves as a common trouble event indicator. The LED, when flashing, indicates that there is an event in the queue that has not been reviewed (local systems) or acknowledged (proprietary systems). When on steady, the LED indicates that all events in the queue have been reviewed or acknowledged.

3-LCD and 3-LCDXL1 controls and indicators (see Figure 2-1 and Figure 2-2)

Index	Control or indicator	Functional description
10	Monitor Button / LED	Pressing the Monitor button places the contents of the Monitor queue onto the display screen for review. Active monitor events are displayed in the order in which they are received. When a monitor event is highlighted on the display, pressing the Monitor button acknowledges the event and advances the display to the next event. The Monitor LED serves as a common monitor event indicator. The LED, when flashing, indicates that there is an event in the queue that has not been reviewed (local systems) or acknowledged (proprietary systems). When on steady, the LED indicates that all events in the queue have been reviewed or acknowledged.
11	Previous Message Button	For U.S. Local and Canadian Local systems, pressing the Previous Message button scrolls the display to show the preceding event in the selected event queue. Reviewing events using the Previous Message button does not acknowledge the event. For U.S. Proprietary and Canadian Proprietary systems, the Previous event button is not operational. Events must be acknowledged in order of their occurrence. **Note:** Press and hold for auto-scroll.
12	Next Message Button	For U.S. Local and Canadian Local systems, pressing the Next Message button scrolls the display to show the following event in the selected event queue. Reviewing events using the Next Message button does not acknowledge the event. For U.S. Proprietary and Canadian Proprietary systems, the Next Message button is not operational. Events must be acknowledged in order of their occurrence. **Note:** Press and hold for auto-scroll.
13	Command Menus Button	Pressing the Command Menus button displays the system command menu to access the following system functions: Status, Enable, Disable, Activate, Restore, Control Output, Reports, Program, and Test Pressing the button a second time returns the user to the current event window.

3-LCD and 3-LCDXL1 controls and indicators (see Figure 2-1 and Figure 2-2)

Index	Control or indicator	Functional description
14	Details Button	Pressing the Details button displays additional information about the event highlighted on the display screen. • For Zone Groups, pressing the Details button displays a list of the active devices in the zone group. • For Instruction Text Groups, pressing the Details button displays the entire instruction text. • For Maintenance Alerts, pressing the Details button displays a list of the dirty devices. • For Common Troubles, pressing the Details button displays a list of the specific troubles for the selected device. • For Guard Patrols, pressing the Details button displays the offending station and indicates whether the activation was caused because of an early, late, or out of sequence condition.
15	Enter key	Pressing the Enter key selects the highlighted menu option or causes the system to start processing the information shown in the display.
16	Delete / Backspace key	Pressing the Delete / Backspace key moves the cursor to the left of the current position and removes the character from the display. The Delete / Backspace key is also used to cancel functions and move the operator back through the menus.
17	Numeric Keypad	Pressing any number key selects the menu item or enters the respective number into the system for use in conjunction with other system functions.
18	Alarm Button / LED	Pressing the Alarm button places the contents of the Alarm queue onto the display screen for review. Active alarm events are displayed in the order in which they are received. When an alarm event is highlighted on the display, pressing the Alarm button acknowledges the event and advances the display to the next event. The Alarm LED serves as a common alarm event indicator. The LED, when flashing, indicates that there is an event in the queue that has not been reviewed (local systems) or acknowledged (proprietary systems). When on steady, the LED indicates that all events in the queue have been reviewed or acknowledged.

3-LCD and 3-LCDXL1 controls and indicators (see Figure 2-1 and Figure 2-2)

Index	Control or indicator	Functional description
19	Supvr Button / LED	Pressing the Supervisory button places the contents of the Supervisory queue onto the display screen for review. Active supervisory events are displayed in the order in which they are received. When a supervisory event is highlighted on the display, pressing the Supervisory button acknowledges the event and advances the display to the next event. The Supervisory LED serves as a common supervisory event indicator. The LED, when flashing, indicates that there is an event in the queue that has not been reviewed (local systems) or acknowledged (proprietary systems). When on steady, the LED indicates that all events in the queue have been reviewed or acknowledged. **Note:** Security events allow for multiple activations from the same point. It is not uncommon for this to happen.
20	Alarm Silence Button / LED	Pressing the Alarm Silence button turns off the EVAC and ALERT channels, and all active audible and visible notification appliance circuits. Pushing the button a second time turns the notification appliance circuits back on. This button may be used to cancel the drill signal. The Alarm silence LED, when lit, indicates that the active notification appliance circuits have been silenced. **Note:** Project configuration settings affect the operation of the Alarm Silence function
21	Reset Button / LED	Pressing the Reset button activates the system's reset sequence to restore the system to normal. The Reset LED flashes quickly during the smoke power-down phase, flashes slowly during the power-up phase, is on steady during the restoral phase, and is off when the system has reset. **Notes** • The Reset button is disabled as long as the alarm silence inhibit timer is running • The Reset button does not affect disabled points or manually overridden functions • The Reset button may not affect security or access control devices. These points may be included in the supervisory or monitor display queues.

3-LCD and 3-LCDXL1 controls and indicators (see Figure 2-1 and Figure 2-2)

Index	Control or indicator	Functional description
n/a	Buzzer	The buzzer on the CPU sounds to alert the operator to off-normal system conditions, such as: • Active alarms • Active test or disabled zones • Active fault conditions • Active monitor conditions The buzzer sounds a pattern associated with each event as determined by the market place settings. Alarm: 3-3-3 pattern Supervisory: 2-2 pattern Trouble: 15 pulses per minute Monitor: 3-3-3 pattern

Creating a status report

Use the Status command to create reports of off-normal points, or to determine the status of points in a security partition. The Status command generates a list that you can view on the LCD module or print on a local printer.

The Status Menu lets you choose the following reports:

- All active points
- Alarm points
- Supervisory points
- Trouble points
- Monitor points
- Test points
- Disabled points
- Output points
- Security points

On the Security Status Menu, you can choose between Partition and Holdup status reports.

To create a status report:

1. Press the Command Menus button, then choose Status.
2. Choose the type of list you want to generate.
3. Enter the target panel's 2-digit address (PP).
   —or—
   Choose a partition from the Partition List.
4. Do one of the following:

   Choose Display if you want to view the list on the LCD module (either 3-LCD or 3-LCDXL1).

   Choose Print Locally, then select a printer, if you want to send the list to a printer connected to the local panel.

Disabling groups

A *group* is an object created during system programming. Groups are required in order to execute certain system functions, but groups bear no physical relationship to the system.

For example, smoke detectors can be assigned to the same *zone group* even though they are not attached to the same wire run.

Disabling a group isolates the group from the system just as if it were a hardware component. Disabling a zone group disables each of the devices in the group individually. Disabling other groups only disables the group response.

There are several types of group:

- And group
- Matrix group
- Service group
- Guard patrol group
- Zone group
- Instruction text group

When you disable a group, the CPU lights the Disable LED on the LCD module and places a *Disabled Active* event in the trouble queue.

Note: Before disabling a group, you need to know which devices are included in the group. You should be able to get a list of logical groups and their members from the company that installed the system.

To disable a group:

1. Press the Command Menus button, then choose Disable.
2. Choose Group.
3. Choose the group type.
4. Select the group from the list.
5. If prompted, enter a valid user access level password.

Enabling groups

A *group* is an object created during system programming. Groups are required in order to execute certain system functions, but groups bear no physical relationship to the system.

For example, smoke detectors can be assigned to the same *zone group* even though they are not attached to the same wire run.

Enabling a group establishes the group as part of the system just as if it were a hardware component. When enabled, any changes in state that occurred while the group was disabled are processed. Enabling a zone group enables each of the devices in the group individually. Enabling other groups only enables their group response.

There are several types of group:

- And group
- Matrix group
- Service group
- Guard patrol group
- Zone group
- Instruction text group

To enable a group:

1. Press the Command Menus button, then choose Enable.
2. Choose Group.
3. Choose the group type.
4. Select the group from the list.
5. If prompted, enter a valid user access level password.

Disabling hardware components

Disabling a hardware component isolates the component from the system. While disabled, a component's state changes are not processed. For example, if a disabled smoke detector changes to the alarm state, the panel will not go into alarm. The panel will go into alarm if you enable the disabled smoke detector and the smoke detector is still in the alarm state.

Hardware components include:

- Devices (input and output circuits, detectors, and modules)
- Rail modules
- Buttons
- LEDs

When you disable a hardware component, the CPU lights the Disable LED on the LCD module and places a *Disabled Active* event in the trouble queue.

Note: To disable a component you need the component's logical address. You can get component's logical addresses from an SDU Objects report.

To disable a hardware component:

1. Press the Command Menus button, then choose Disable.
2. Do one of the following:

- Choose Device to disable: input circuits, output circuits, detectors, or modules
- Choose Card to disable: rail modules or control / display modules
- Choose Button to disable: control / display module buttons
- Choose LED to disable: control / display module LEDs

3. Enter the target component's logical address.
4. If prompted, enter a valid user access level password.

Enabling hardware components

Enabling a hardware component re-establishes a disabled component as part of the system. When enabled, any changes in state that occurred while the component was disabled are processed. For example, if you enable a smoke detector that changed to the alarm state while it was disabled the panel will go into alarm.

Hardware components consist of:

- Devices (input and output circuits, detectors, and modules)
- Rail modules
- Buttons
- LEDs

To enable a disabled component you need the component's logical address. You can get a disabled component's logical address from the disabled points list.

Note: All components are enabled at startup, unless programmed otherwise. The LCD module does not indicate a trouble for any points disabled at startup and points disabled at startup are not listed on the disabled points list.

To enable a hardware component:

1. Press the Command Menus button, then choose Enable.
2. Do one of the following:

- Choose Device to enable: input circuits, output circuits, detectors, or modules
- Choose Card to enable: rail modules or control / display modules
- Choose Button to enable: control / display module buttons
- Choose LED to enable: control / display module LEDs

3. Enter the component's logical address.
4. If prompted, enter a valid user access level password.

Arming security partitions

A 'Partition' can comprise any combination of security, fire, supervisory, and monitor device types as well as system pseudo points. Note that only security device types will generate security alarm events. Partition alarm events are not annunciated on the 3-LCD, they only get annunciated in FireWorks, Keypad Display units, or as activated LEDs on 3-ANNs and Envoy. Non-security device types will not trigger Partition Alarm events. There is virtually no limit on the number of 'objects' that can be assigned to a single partition.

A security partition is a group of devices intended to secure a physical area. When you arm a partition, you instruct the system to monitor those devices for armed alarm events.

Partitions can be armed for two states: *Stay* and *Away*. Arming to Stay causes the system to monitor only those devices on the perimeter of the protected area. This leaves you free to move about inside the partition. Arming to Away causes the system to monitor all devices, both perimeter and interior.

Before arming the partition, the system checks all the devices in the partition to ensure that they're in the normal state. Typically, if a device is off-normal it may prevent the partition from being armed. However, you can elect to disable the off-normal device and arm the remaining devices in the partition.

When commanded to conditionally arm, the partition may arm directly or may generate an error or warning under the following conditions:

- The Partition is configured to issue a warning (not error) for non-security objects that are "off-normal". If non-security objects are configured to issue an error on Partition arming, then the Partition will always issue an error message and will not arm conditionally when any one single error device is "off-normal". When this occurs, the Partition can only be 'forced' into an arm state.
- The total number of "off-normal" non-security devices plus the total number of bypassed or disabled regular security devices do not exceed the maximum number of bypassed/disabled devices (as set in the 3-SDU.)
- When security devices are in a "Test" condition (see Testing Security Devices), the Partition will arm with no warning even if the number of devices in "Test" exceed the 3-SDU setting for maximum number of bypassed/disabled devices.

Partitions can be commanded to arm unconditionally (i.e., forced arm) irrespective of the error or warning conditions presented, via the following methods:

- An SDU Rule activated by a switch on an EST3 panel.
- An unconditional arm command is issued via FireWorks. This also requires the proper user access level.

Note: Issuing an unconditional forced arm command to a Partition may result in undesirable false security alarm events.

After choosing to arm the partition, the system displays a list of partitions. Scroll through this list and select the partition you wish to arm.

Note: 3-LCD and 3-LCDXL1 security commands are optional. Cabinet configuration settings determine whether security commands appear on the panel menus.

To arm a security partition:

1. Press the Command Menus button, then choose Security.
2. Choose Partition.
3. Choose the type of arming you want: Partition Away or Partition Stay.
4. Scroll through the Partition List and choose the partition you want to arm.
5. If prompted, enter a valid user access level password.

Disarming security partitions

A security partition is a group of devices intended to secure a physical area. When you disarm a partition, you instruct the system to stop monitoring those devices for armed alarm events.

When a partition is disarmed the system generates disarmed alarm events, except for 24Hour security devices which always generate armed alarm events.

When you choose the disarm command, the system checks all the devices in the partition to ensure that they're in a normal state. If a device is in an off-normal condition while the partition is armed, the panel will restore the armed event and activate the disarmed event.

After you choose the disarm command, the system displays a list of partitions. You scroll through this list and select the partition you wish to disarm.

Note: Security commands are optional. Project configuration settings determine whether security commands appear on the panel menus.

To disarm a security partition:

1. Press the Command Menus button, then choose Security.
2. Choose Partition.
3. Choose Partition Disarm.
4. Scroll through the Partition List and choose the partition you want to disarm.
5. If prompted, enter a valid user access level password.

Resetting security partitions

A security partition is a group of devices intended to secure a physical area. When you reset a partition, you instruct the system to update the status of the devices, then update the event messages in all annunciator message queues.

When you choose the reset command, the system checks all the devices in the partition to determine their current state. Event messages previously stored in message queues are deleted, and new event messages are added as required by the current state of the devices.

After you choose the reset command, the system displays a list of partitions. Only disarmed partitions can be reset. You scroll through this list and select the partition you wish to reset.

Note: Security commands are optional. Cabinet configuration and card access settings determine whether security commands appear on the panel menus. The Partition Reset command has no effect on fire alarm devices.

To restore a security partition:

1. Press the Command Menus button, then choose Security.
2. Choose Partition.
3. Choose Partition Reset.
4. Scroll through the Partition List and choose the partition you want to reset.
5. If prompted, enter a valid user access level password.

Bypassing security devices

When you *bypass* a security device, the system suppresses the device's security alarm events, but continues to process all other events (e.g. Tamper, Fault, and Maintenance). For example, say a loading bay door is damaged so that the door contact cannot be closed. This prevents arming of the partition. As a temporary measure you can bypass the door contact to make it possible to arm the partition.

Devices can only be bypassed and unbypassed while the partition is disarmed. When armed, you cannot bypass or remove bypasses.

While bypassed, the device's alarm events are not processed. The panel will go into alarm if you unbypass the device while it is still in an alarm state.

Security points may be bypassed and disabled at the same time. In this state, the disable takes priority and only the disable state is annunciated. When the point becomes enabled, the bypass indication will once again be displayed.

Note: To bypass a device you need the device's logical address. You can get device's logical addresses from an SDU Objects report. In addition, the SDU includes a setting that defines how many points in a partition can be bypassed and still allow arming of that partition.

To bypass a security device:

1. Press the Command Menus button, then choose Security.
2. Choose Device.
3. Choose Bypass.
4. Enter the logical address of the device.
5. If prompted, enter a valid user access level password.

Removing bypasses from security devices

When you remove a bypass from a security device, the system resumes processing the device's alarm events. The panel will go into alarm if you remove a bypass from a device while it is in an active state (i.e., in its otherwise alarm position).

To unbypass a device, you need the device's logical address. You can get the logical address from the Disabled Points list.

To remove a bypass from a security device:

1. Press the Command Menus button, then choose Security.
2. Choose Device.
3. Choose Remove Bypass.
4. Enter the logical address of the device.
5. If prompted, enter a valid user access level password.

Guard patrol groups

Guard patrol groups are used to monitor the activities of security guards. A security guard can be required to walk any one of a number of predetermined tours. During each tour, the guard must activate guard patrol stations that are located along the tour.

When a guard activates a station too early, too late, or out of sequence, the LCD module displays a *Guard Patrol Active* message in the alarm message queue. The operator can press the Details button to determine which station reported in.

Starting a guard patrol

Activating a guard patrol group starts the system's early, late, and out of sequence sensing mechanisms. If a station reports in early, late, or out of sequence, the guard patrol sensing mechanisms stop and the tour is ended.

To activate a guard patrol:

1. Press the Command Menus button, then choose Activate.
2. Choose Guard Patrol Route.
3. Select the guard patrol route from the list.
4. If prompted, enter a valid user access level password.

Restoring a guard patrol

When a guard patrol tour ends because a guard patrol station was not activated at the proper time, you must restore the Guard Patrol group to which the station belonged.

To restore a guard patrol:

1. Press the Command Menus button then choose Restore.
2. Choose Guard Patrol Route.
3. Select the guard patrol route from the list.
4. If prompted, enter a valid user access level password.

Changing the smoke detector sensitivity level

Smoke detectors can operate using two levels of sensitivity, called *primary sensitivity* and *alternate sensitivity*. The system configures smoke detectors to use their primary sensitivity level (typically, less sensitive) during normal business hours. A time control then reconfigures the smoke detectors to use their alternate sensitivity level (typically, more sensitive) after hours when the premises are unoccupied.

You can use menu commands to manually switch between sensitivity levels as required. To change to the alternate sensitivity level, you activate alternate sensitivity. To change to primary sensitivity level, you restore primary sensitivity.

Note: You should be able to get a list of the primary and alternate sensitivity setting for each smoke detector from the company that installed the system.

To change to alternate sensitivity level:

1. Press the Command Menus button, then choose Activate.
2. Choose Alt. Sensitivity.
3. If prompted, enter a valid user access level password.

To change to primary sensitivity level:

1. Press the Command Menus button, then choose Restore.
2. Choose Primary Sensitivity.
3. If prompted, enter a valid user access level password.

Changing event message routing

Each device in the system is configured with a primary and alternate message routing. When a device in the system changes state, the panel connected to the device produces an event. The panel distributes the event according to the active message routing setting that is active at the time.

Activating event alternate message routing

Activating the alternate event message routing directs the panel to use the alternate routing destinations for any device that changes state.

To activate event alternate message routing:

1. Press the Command Menus button, then choose Activate.
2. Choose Alt Message Route
3. If prompted, enter a valid user access level password.

Restoring event primary message routing

Restoring the primary message directs the panel to use the primary routing destinations for any device that changes state.

To restore event primary message routing:

1. Press the Command Menus button, then choose Restore.
2. Choose Primary Msg Route
3. If prompted, enter a valid user access level password.

Changing the output state of a relay or LED

Use the Control Output command to change the output state of a relay or LED.

- A relay module can be On (energized) or Off (deenergized). In the energized state, the relay module's normally-open contacts are held closed and the normally-closed contacts are held open.
- An LED can be off, on, blink slow, or blink fast. The fast and slow blinking rate is determined by the marketplace.

Changing the output state of a relay or LED requires entering a command priority level.

Priority	Description
Set	This priority overrides low, medium, and high priority instructions and forces the device to the desired state. The set priority does not reset the device's priority counters.
Latch	This priority overrides low, medium, and high priority instructions and forces the device to the desired state. The latch priority does reset the device's priority counters.
Low	This priority forces the device to the desired state and adjusts the low priority counter accordingly.
Medium	This priority forces a device to the desired state and adjusts the medium priority counter accordingly.
High	This priority forces a device to the desired state and adjusts the high priority counter accordingly.

To change the output state of a relay or LED:

1. Press the Command Menus button, then choose Activate.
2. Choose the device type.
3. Select the desired output state.
4. Select the priority this command has over other commands affecting the same device.
5. Enter the target device's 8-digit logical address (PPCCDDDD).
6. If prompted, enter a valid user access level password.

Creating reports

The Reports command generates a report that you can view on the LCD module (either 3-LCD or 3-LCDXL1) or print on the local printer. Three types of report are available:

- Device Maintenance
- History
- Revisions
- Modcom Compliance

Device Maintenance: a list of detectors and the amount of environmental compensation they have used. You can choose to list devices in several ways.

History: a chronological list of events that have occurred on a panel since the panel was placed into service or since the last time the history was cleared.

Two versions of the History report are available: History With Text, and History Without Text. History With Text only includes devices for the targeted panel in the report. History Without Text includes devices for all panels in the report.

Revisions: a list of all the hardware and software components installed in a panel and their revision levels.

Modcom Compliance: lists the NFPA 72 compliance level of all 3-MODCOM modules in a given panel.

To create a Device Maintenance report:

1. Press the Command Menus button, then choose Report.
2. Choose device maintenance.
3. Do one of the following:

- Choose Dirty Devices >80% then enter the target panel address (PP).
- Choose Dirty Devices >20% then enter the target panel address (PP).
- Choose Single Device then enter the target device address (PPCCDDDD).
- Choose Devices On A Card to get the compensation level for all the detectors on a single loop then enter the target loop's logical address (PPCCL).

4. Send the list to the display or to the printer. If you choose to send the list to the printer, choose Printer 1 if the printer is connected to port 1 or Printer 2 if connected to port 2.

Note: If the device maintenance report is being run on a Addressable Analog Driver Controller, use the following table to determine sensitivity levels.

Addressable Analog Driver Controller device maintenance report sensitivity levels

Type	Trouble	Normal	Alarm level 1	Alarm level 2	Alarm level 3	Trouble short
Photo	400	520 - 1610	1710	2050	2390	N/A
Ion	400	600 - 1710	1810	1960	2110	N/A
Thermal	400	500 - 1900	N/A	N/A	2000	N/A
Monitor	600	750 - 1300	N/A	N/A	1400	1800
Control	600	750 - 1300	N/A	N/A	N/A	1400

For additional information, refer to the device's installation sheet.

To create a History report:

1. Press the Command Menus button, then choose Report.
2. Choose History.
3. Choose History With Text or History Without Text.
4. Enter the target panel's 2-digit address (PP).
5. Send the list to the display or to the printer. If you choose to send the list to the printer, choose Printer 1 if the printer is connected to port 1 or Printer 2 if connected to port 2.

To create a Revisions report:

1. Press the Command Menus button, then choose Report.
2. Choose Revision Levels.
3. Enter the target panel's 2-digit address (PP).
4. Send the list to the display or to the printer. If you choose to send the list to the printer, choose Printer 1 if the printer is connected to port 1 or Printer 2 if connected to port 2.

To create a Modcom Compliance report:

1. Press the Command Menus button, then choose Report.
2. Choose Modcom Compliance.
3. Enter the target panel's 2-digit address (PP).
4. Send the list to the display or to the printer. If you choose to send the list to the printer, choose Printer 1 if the printer is connected to port 1 or Printer 2 if connected to port 2.

Setting the system time and date

Set the system time and date to configure the panel's time of day and date reference. Set the system time and date when the panel is first placed in service.

The system time of day is set in 24-hour format (HHMMSS), where: HH is the hour, MM is the minutes, and SS is the seconds.

For example:

Enter this value (HHMMSS)	To set this time
000000	12 midnight
010000	1 a.m.
115900	11:59 a.m.
120000	12 noon
130000	1 p.m.
235930	11:59:30 p.m.

To set the system time of day reference:

1. Press the Command Menus button, then choose Program.
2. Choose Change Time.
3. Enter the time in 24-hour format (HHMMSS)
4. If prompted, enter a valid user access level password.

The system date is set in a month/date/year format (MMDDYYYY), where: MM is the month number, DD is the date, and YYYY is the year. For example, to set the date for January 1, 1999, enter 01011999.

To change the system date reference:

1. Press the Command Menus button, then choose Program.
2. Choose Change Date.
3. Enter the date (MMDDYYYY).
4. If prompted, enter a valid user access level password.

Changing user access level passwords

You should change the access level passwords from their default values to prevent unauthorized access to system. You may not use the same password for more than one access level. The system default passwords are as follows:

Access Level	Default password	Access level required to change
Level 1	1111	Level 2
Level 2	2222	Level 3
Level 3	3333	Level 4
Level 4	4444	Level 5

Caution: Before changing a password, be sure to write it down on a sheet of paper and store it in a safe place.

To change a user access level password:

1. Press the Command Menus button, then choose Program.
2. Choose Edit Password.
3. Select the user access level password you want to change.
4. Enter the new 4-digit password.
5. If prompted, enter a valid user access level password.

Restarting a panel

Restarting a panel initiates the panel's start up processes without first turning off the operating power.

To restart a panel:

1. Press the Command Menus button, then choose Program.
2. Choose Restart.
3. Choose whether to restart a single panel or all panels on the network. If you choose to restart a single panel, then enter the target panel's 2-digit address (PP).
4. If prompted, enter a valid user access level password.

Scheduling holidays

Holidays vary from installation to installation and may change from year to year. By scheduling holidays, a panel can activate a time-controlled event based on whether the day is a scheduled holiday.

Note: Each panel can store up to 255 holidays.

To schedule a holiday:

1. Press the Command Menus button, then choose Program.
2. Choose Edit Holiday List.
3. Choose Add Holiday.
4. Enter the holiday's month and date (MMDD).
5. If prompted, enter a valid user access level password.

To delete a holiday from the list:

1. Press the Command Menus button, then choose Program.
2. Choose Edit Holiday List.
3. Select Delete Holiday.
4. Select the holiday from the list.
5. If prompted, enter a valid user access level password.

To change a holiday:

1. Press the Command Menus button, then choose Program.
2. Choose Edit Holiday List.
3. Choose Edit Holiday.
4. Select a holiday from the list.
5. Enter the new month and date (MMDD).
6. If prompted, enter a valid user access level password.

Clearing the panel history file

Clearing the panel's history file:

- Resets the alarm history counter on the LCD module
- Erases the list of events that occurred on the panel since the panel was placed into service or the last time the history file was cleared.

Caution: Clearing the panel history file means that all history data for the panel is permanently deleted. Entering panel 99 clears history on *all* panels in the network. This command requires a level 4 password, and is for use by an authorized service technician only.

To clear the alarm history:

1. Press the Command Menus button.
2. Choose Program, then choose Clear History.
3. Enter the panel number.
4. If prompted, enter a valid user access level password.

Testing alarm input devices

In order to test an alarm input device, the device must be part of a service group. Service groups allow alarm input devices to be activated without placing the system into alarm. The protected premises may be divided into more than one service group to make testing possible without leaving the entire premises unprotected.

Without any additional programming, you can test alarm input devices by:

- Putting the service group into test
- Activating each of the devices in the service group
- Verifying each of the devices show up on the active points list
- Canceling the test

Note: Putting a service group into test introduces a Service Group Active event in the trouble queue. You can press the Details button to verify which service group is in test.

To put a service group into test:

1. Press the Command Menus button, then choose Test.
2. Choose Start Test.
3. Select the service group.
4. If prompted, enter a valid user access level password.

To cancel the test:

1. Press the Command Menus button, then choose Test.
2. Choose Cancel Test.
3. Select the service group that is in test.
4. If prompted, enter a valid user access level password.

Note: A service group will automatically time-out and cancel after approximately 1 hour of inactivity.

Testing security input devices

The information provided in section "Testing alarm input devices" applies equally to all security input devices. However, there are certain nuances that apply to security devices only.

With the service group activated, security devices will generate Test Events only in accordance with their expected operation relative to their armed conditions.

The following example applies equally for all security device types:

For Security Interior devices, if the partition is disarmed or armed stay, Test Events will not be generated on the activation of the device. If the partition is armed away, Test Events will be generated on the activation of the device. However, there is a slight exception. If, after activating the Service Group, the Security Interior device is activated (and not restored) while the partition is disarmed, a Test Event will be generated immediately when the partition is armed even if the armed state is stay.

The exception in the above example happens as a result of a status update that occurs for all partition devices when partitions are armed. On evaluating the results of the status update, EST3 generates the Test Events after recognizing the active state of the security device with respect to the active state of the Service Group irrespective of the device type and armed conditions. This applies to all security device types.

Another rule that applies for security devices is that partitions must be disarmed and reset in order to clear all security Test Events from the Monitor queues in both EST3 and FireWorks. Canceling the service group test is not sufficient.

Testing Signature devices

From the LCD module you can place a Signature device into the alarm, prealarm, or trouble condition for testing. Signature devices include all sensors, modules, and security devices. To test a Signature device, the device must be connected to a 3-SSDC1 or 3-SDDC1.

For latching devices, you must reset the panel to restore the tested device to its normal state. Nonlatching devices restore automatically without resetting the panel.

WARNING: The AlarmTest command puts the device into alarm condition and activates its programmed alarm responses.

To test a Signature device:

1. Press the Command Menus button, then choose Test.
2. Choose Signature Device Test.
3. Choose Alarm, etc, Prealarm, etc, or Trouble.
4. Enter the device address and press the enter button.
5. When prompted, enter a valid user access level password.

Testing the panel lamps and panel sounder

From the LCD module you can test all the LEDs on the panel and the panel sounder. Performing a lamp test lights all LEDs on the panel and turns on the panel sounder for 10 seconds. After the test is finished, the LCD returns to its normal state display.

To perform a lamp teat:

1. Press the Command Menus button, then choose Test.
2. Choose Lamp Test.

Chapter 3

3-ASU operating instructions

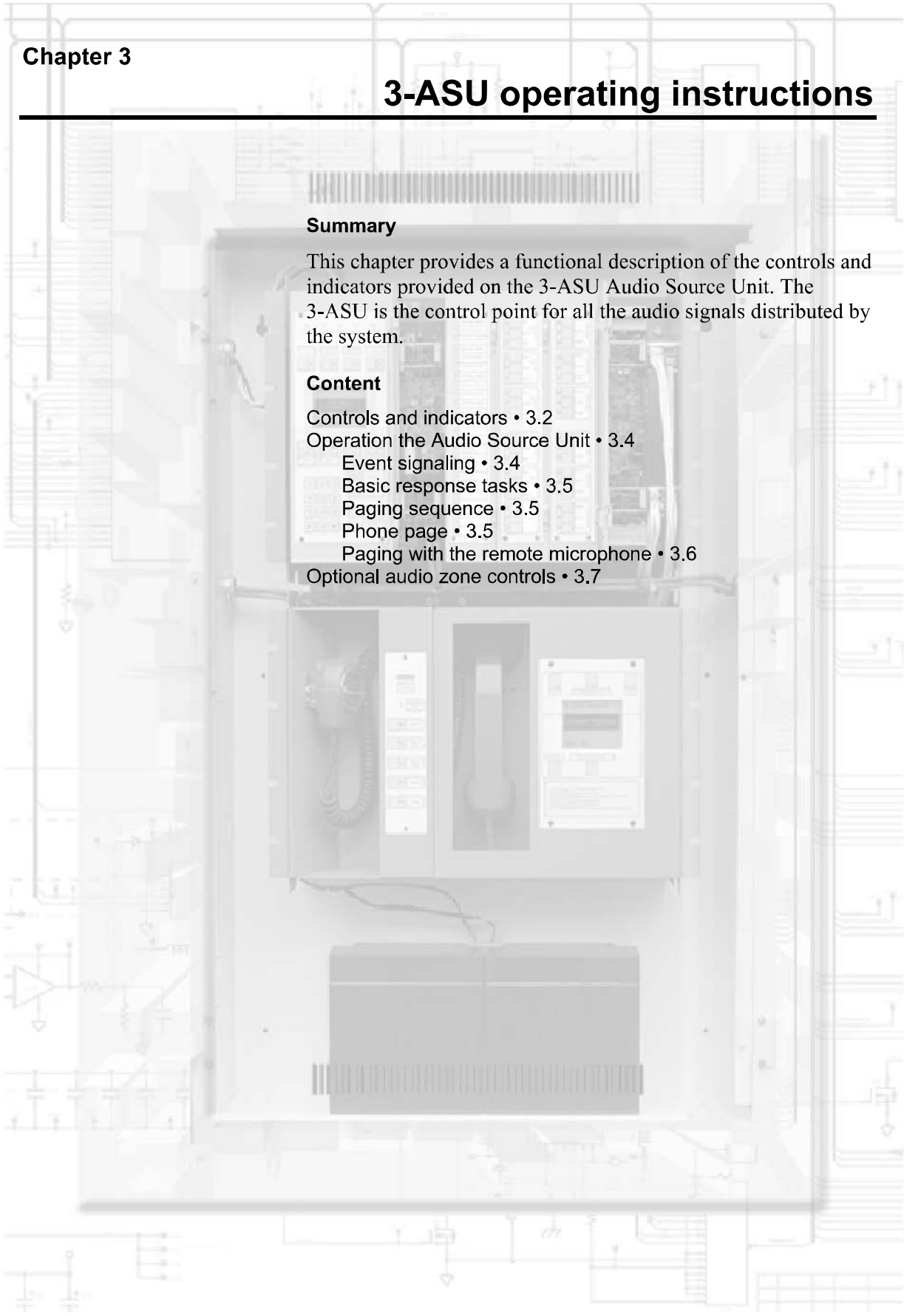

Summary

This chapter provides a functional description of the controls and indicators provided on the 3-ASU Audio Source Unit. The 3-ASU is the control point for all the audio signals distributed by the system.

Content

Controls and indicators • 3.2
Operation the Audio Source Unit • 3.4
- Event signaling • 3.4
- Basic response tasks • 3.5
- Paging sequence • 3.5
- Phone page • 3.5
- Paging with the remote microphone • 3.6

Optional audio zone controls • 3.7

Controls and indicators

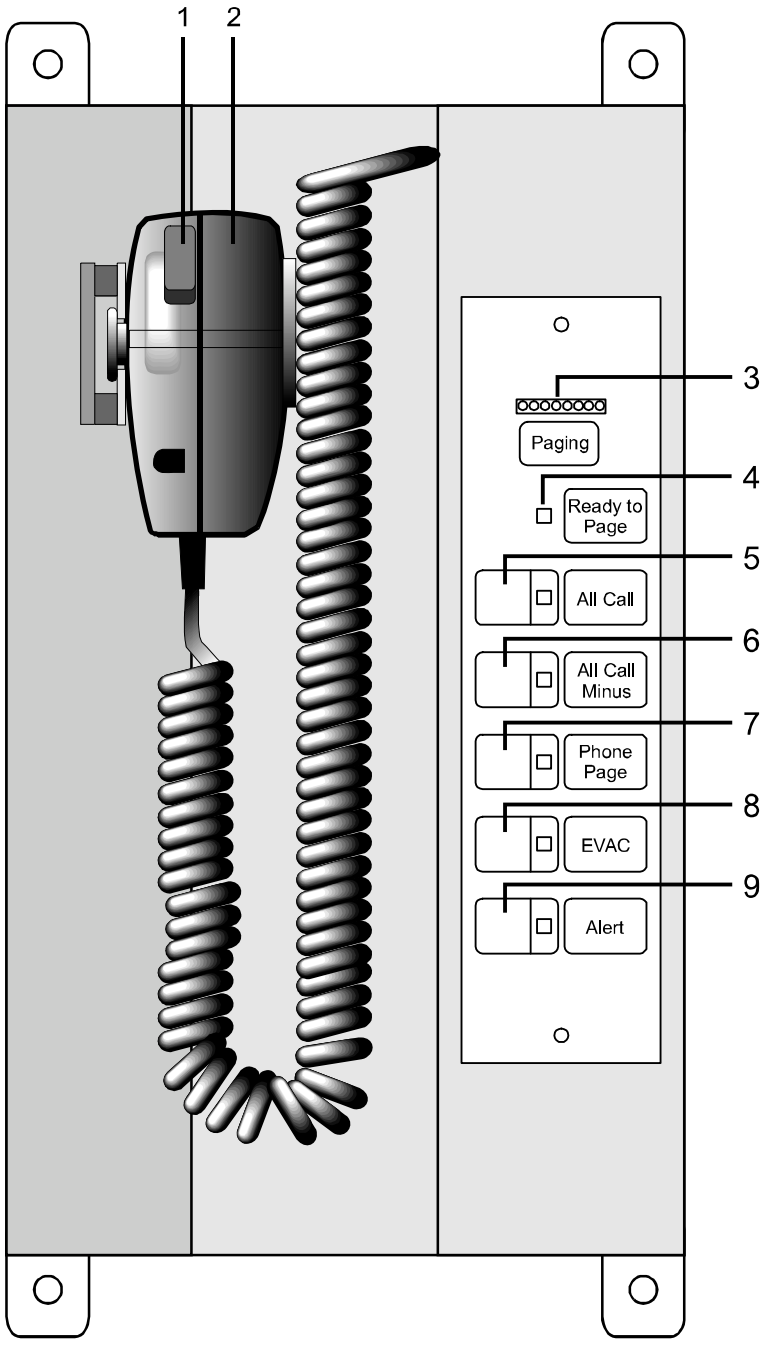

Figure 3-1: 3-ASU controls and indicators

3-ASU controls and indicators (see Figure 3-1)

Index	Control or Indicator	Functional Description
1	Push-To-Talk (PTT) Switch	Push the PTT switch and wait for the Ready to Page LED (item 4) to light steadily before making an announcement.
2	Paging Microphone	Speak into the microphone to make an announcement.
3	Page Level Meter	Indicates paging volume. When paging, speak at a level that causes the far right LED to only flicker occasionally.
4	Ready to Page LED	Green LED flashes during pre-announcement tone, then is on steady when the system is ready to page.
5	All Call Switch/LED	Green LED on indicates the 3-ASU is in the All Call mode. Pressing the All Call switch directs the page to all areas of the facility. To exit the All Call mode, press the switch a second time or press the All Call Minus, EVAC, or Alert switches.
6	All Call Minus Switch/LED	Green LED on indicates the 3-ASU is in the All Call Minus mode. Pressing the All Call Minus switch directs the page to the areas of the facility which have not been automatically selected to receive the EVAC or Alert tone/message. To exit the All Call Minus mode, press the switch a second time or press the All Call, EVAC, or Alert switches.
7	Phone Page Switch/LED	Green LED on indicates the 3-ASU is in the Phone Page mode. Pressing the Phone Page switch replaces the paging microphone (item 2) with the firefighter's telephone system. Individuals in remote areas of the facility can then issue a page via the firefighter's telephone system. All phone paging is under the direct control of the 3-ASU operator. Press the switch a second time to disconnect the Phone Page mode.
8	EVAC Switch/LED	Green LED on indicates the 3-ASU is in the EVAC mode. Pressing the EVAC switch directs the page to areas of the facility which are automatically receiving the evacuation tone/message. To exit the EVAC mode, press the switch a second time or press the All Call, All Call Minus, or Alert switches.
9	Alert Switch/LED	Green LED on indicates the 3-ASU is in the Alert mode. Pressing the Alert switch directs the page to areas of the facility which are automatically receiving the Alert tone/message. To exit the Alert mode, press the switch a second time or press the All Call, All Call Minus, or EVAC switches.

Operation the Audio Source Unit

The function of a life safety system is to alert people occupying a facility of an emergency. The Audio Source Unit is designed to permit rapid selection and paging to the affected areas of the facility. For example, the page signal automatically overrides any other signals.

Event signaling

In large facilities, the people most effected by an emergency should be instructed to evacuate the area immediately, and people not in immediate danger should receive an alert signal. Since most large facilities have a significant number of transient occupants, the most effective signaling is a combination of attention getting tones, followed by instructional messages.

The information provided here is general in nature. Each facility is unique. The life safety system in your facility has been designed by fire safety professionals to meet the specific requirements of the fire codes in your location. Please refer to the site-specific instructions provider by the installer to determine the exact operation of your system.

Evacuation (EVAC) Signaling

The evacuation signal notifies facility occupants that they are in immediate danger, and must evacuate the area. Evacuation signals can take the form of bells, horns, tones, and audio messages. Accompanying the audio message is a visual notification appliance, typically a flashing strobe light.

The system automatically activates all the evacuation signals in the affected areas of the facility.

Alert Signaling (optional)

The alert signal notifies the occupants of a facility that: an emergency event is in progress; they are not in immediate danger; and they should prepare to evacuate, but not to evacuate at this time. Alert signals are typically tones or audio messages.

The system automatically activates the alert signals (if programmed in your system) in the affected areas of the facility.

Page Messages

The most reliable source of information about an emergency event comes from the individual who is in charge of the facility during the emergency. This individual is typically the fire chief or facility manager. The page function permits the individual in charge to make announcements to selected portions of the

building, advising occupants of what actions to take for safe egress, etc.

Basic response tasks

The basic tasks in responding to an emergency event are:

1. Use the All Call function to announce the arrival of the fire department, making any necessary announcements.
2. Use the Page to Evac function to reinforce the evacuation of the occupants in areas receiving the evacuation signal. As an example, occupants may be directed to follow the evacuation plan, not to use the elevators, etc.
3. Use the Page to Alert function to notify the areas not in immediate danger to prepare to evacuate, or that people in the evacuation area may be entering their area as an area of refuge.
4. Use the All Call Minus switch to make announcements to areas of the facility not receiving the Evac or Alert signals, as required. Stairwells are typical areas accessed using the All Call Minus page function.
5. The zone page controls may be used to manually select paging areas.

Paging sequence

Select the areas to receive the page by pressing the appropriate page function switch(s). The switch's integral LED will be on steady when the system is ready to receive the page.

Press the PTT switch on the microphone. The Ready to Page LED will flash while the pre-announcement tone is sounding. Begin the announcement once the Ready to Page LED is on steady. Adjust your voice level so that the far right LED on the volume meter only flickers occasionally. Release the PTT switch when the announcement is finished. The system will turn off the page, and return to its pre-page condition after a short delay.

Note: The local microphone has priority over a telephone page, which has priority over a remote microphone page.

Each installation is customized. Please refer to your site-specific documentation to determine which areas of your facility automatically receives the page, or how to select the areas to receive the page.

Phone page

If your system is equipped with a firefighter's telephone circuit, you can connect the telephone circuit to the page function by

pressing the Phone Page switch. This permits an individual talking on the firefighter's telephone system to make announcements over the paging system.

Establish the phone connection over the Firefighter's Telephone Control Unit. Select the areas to receive the page the same way as if it were to be originated using the microphone. Instruct the individual who is remote paging to begin speaking after the pre-announcement tone has finished. Press the Phone Page Switch and begin the phone page. The phone page is under complete control of the 3-ASU/FT, and may be interrupted at any time by pressing the Phone Page switch a second time.

Paging with the remote microphone

If your system is equipped with the remote paging microphone, it may be used to issue pages throughout the facility. The remote microphone page is automatically overridden by any pages issued by the local microphone in the Audio Source Unit or a phone page.

Each remote microphone installation is customized. Please refer to your site-specific documentation to determine which areas of your facility automatically receives the page, or how to select the areas to receive the page.

Optional audio zone controls

The system can provide total manual control of the paging signals. This permits the individual in charge to extend the coverage area of the page beyond the pre-programmed areas. Your system may have the option of manually directing the page message using one of the types of control/display modules shown in Figure 3-2. The specific type and location of these displays will vary, however the basic functions are similar.

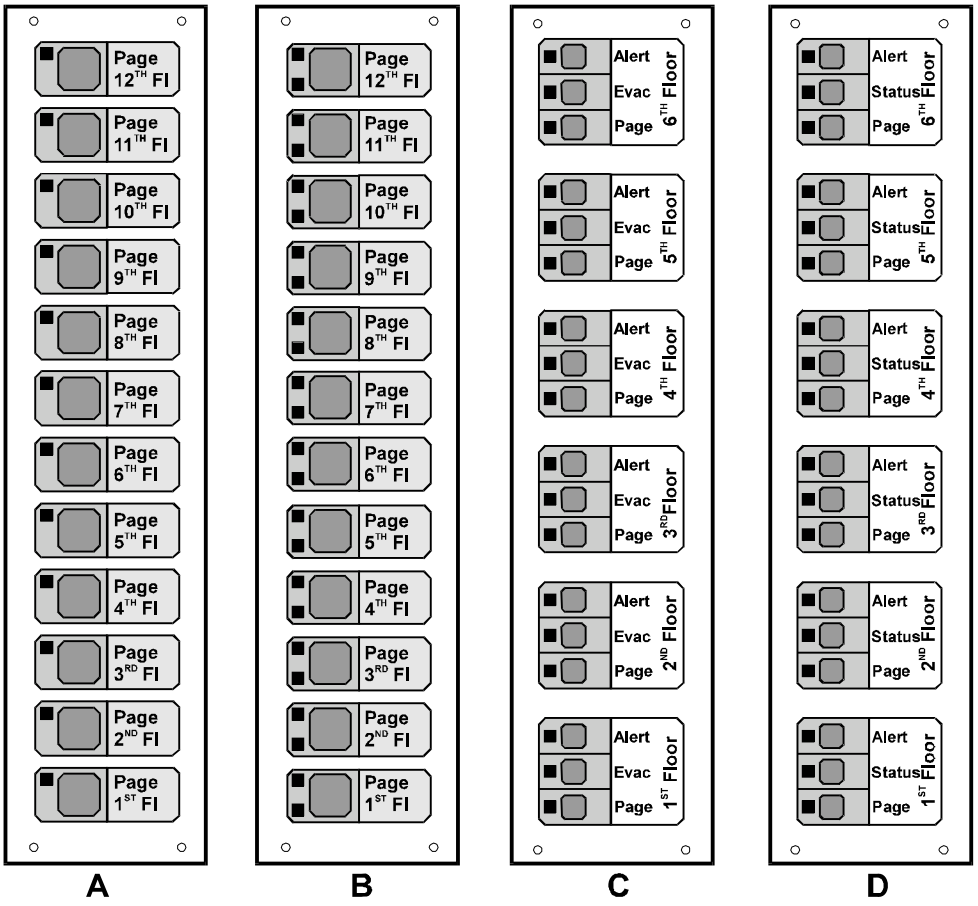

Figure 3-2: Control/display module options

Pressing a zone select switch on the displays shown in Figure 3-2A and Figure 3-2B adds that zone to any zones selected by the page function switches on the Audio Source Unit. The LED in the upper left corner of each floor's control/display module is on when the floor is selected. The LED in the lower left corner on display B is used to annunciate trouble on an amplifier or notification appliance circuit associated with the zone.

The control/display module shown in Figure 3-2C is used to manually direct the Evac and Alert signals as well as the page

message to individual areas of the facility. The LEDs can be programmed to follow any automatic system responses as well as manual audio zone selections.

The control/display module shown in Figure 3-2D is used to manually direct the Evac signal and pages to individual areas of the facility. The center switch is inoperative. This configuration is typically used in facilities where the alert signal is automatically sent to all areas not receiving the evacuation signal. The LEDs follow any automatic system responses as well as manual audio zone selections. The Status LED can be programmed to indicate the trouble state of the zone amplifier.

Chapter 4

3-FTCU operating instructions

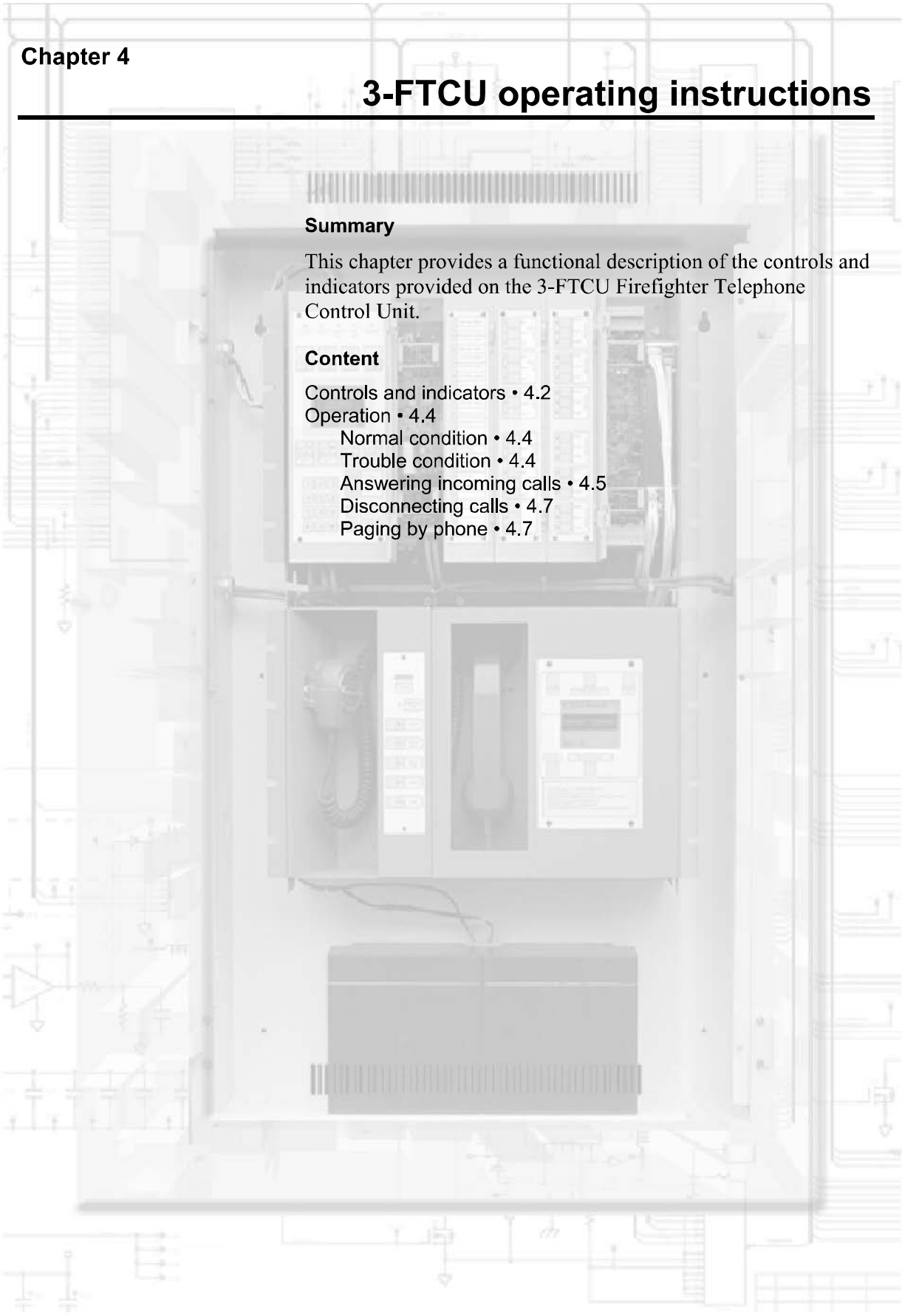

Summary

This chapter provides a functional description of the controls and indicators provided on the 3-FTCU Firefighter Telephone Control Unit.

Content

Controls and indicators • 4.2
Operation • 4.4
- Normal condition • 4.4
- Trouble condition • 4.4
- Answering incoming calls • 4.5
- Disconnecting calls • 4.7
- Paging by phone • 4.7

Controls and indicators

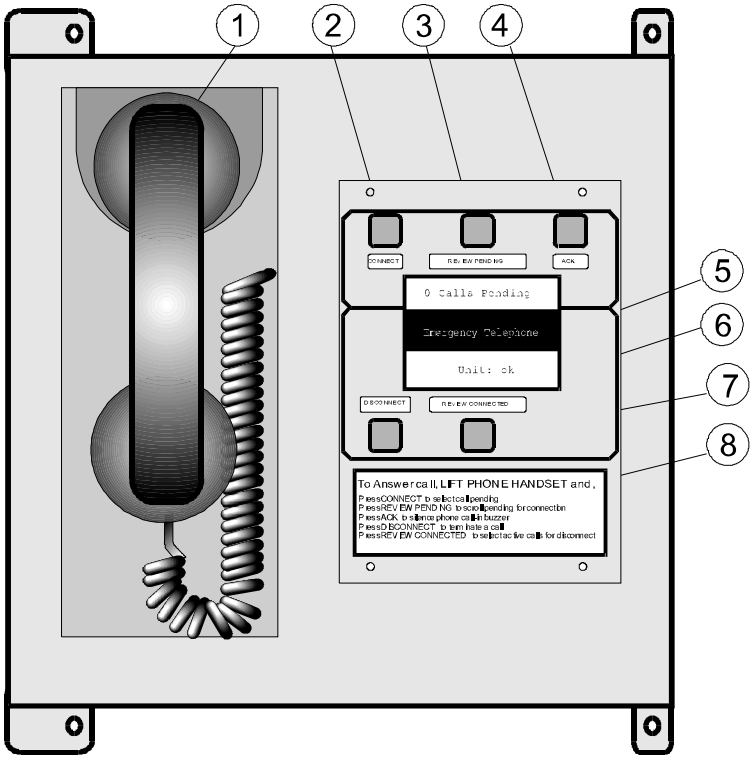

Figure 4-1: 3-FTCU controls and indicators

3-FTCU controls and indicators (see Figure 4-1)

Index	Control or indicator	Functional description
1	Master telephone handset	The master telephone handset permits the operators to communicate with dedicated firefighter telephone stations which are strategically located throughout the facility.
2	Connect switch	The connect switch connects the incoming calls to the master telephone handset.
3	Review pending switch	The review pending switch scrolls the list of pending incoming calls.
4	ACKnowledge switch	The acknowledge switch silences the call-in buzzer.
5	LCD display	The LCD display shows the status of the firefighter telephone system. The display is backlit in the alarm mode and when an incoming call is received.
6	Disconnect switch	The disconnect switch is used to remove the connected phone which is shown in reversed text on the bottom of the display.
7	Review connected switch	The review connected switch scrolls the list of connected calls on the bottom of the display.
8	Instruction placard	This card is a set of phone operating instructions.

Operation

The operational status of the phone system can be determined by using the 3-FTCU LCD display.

Normal condition

When there is no activity on the system the screen appears as shown in Figure 4-2. The top line indicates that there are no incoming calls pending.

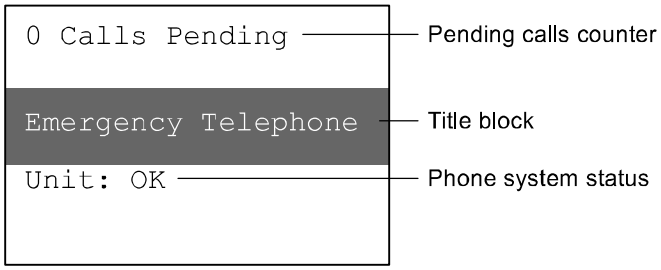

Figure 4-2: Normal display

The bottom line indicates the 3-FTCU unit status. “OK” means that there are no troubles with the phone system.

Trouble condition

When there is a fault on the firefighter telephone system, a fault indication will appear on the bottom of the display, as shown in Figure 4-3. Local faults may appear on the second line of the display. Circuit faults require the use of a 3-LCD or 3-LCDXL1 module to find the specific cause of the problem.

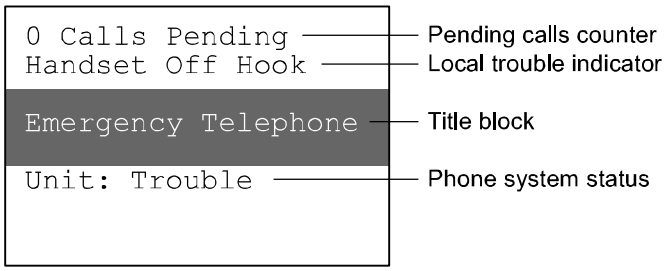

Figure 4-3: Trouble display

Answering incoming calls

An incoming call is initiated when a firefighter telephone is taken off-hook or plugged into a remote telephone jack. The caller hears a tone, indicating the connection is good, and the call-in buzzer is activated at the 3-FTCU.

Display

The number of incoming calls is always listed on the top line of the display. The identification of the incoming call appears in reversed text on the second line of the display, as shown in Figure 4-4. Should multiple calls be pending, the reversed text display will slowly sequence through the incoming calls.

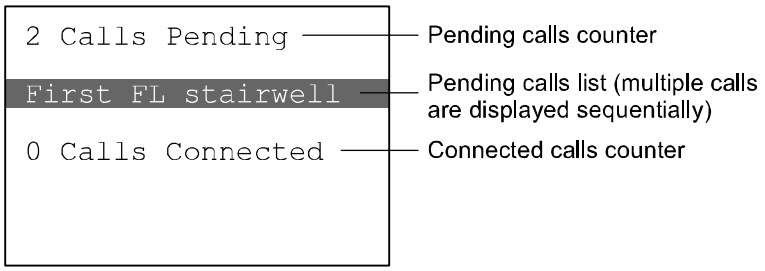

Figure 4-4: Incoming call display

To answer an incoming call

1. Silence the call-in buzzer by pressing the ACK (acknowledge) switch. The buzzer will re-sound each time a new incoming call is received.
2. If multiple calls are shown in the display, stop the call identifier sequencing by pressing the Review Pending switch once. Each additional activation of the Review Pending switch manually steps the display through the list of incoming calls. When the desired call appears on the pending calls identification line, stop stepping through the calls.
3. To answer the selected call, press the Connect switch. The call identifier will move from the pending calls identification line of the display to the connected call list at the bottom of the display, as shown in Figure 4-5. Once connected, you may begin your conversation.

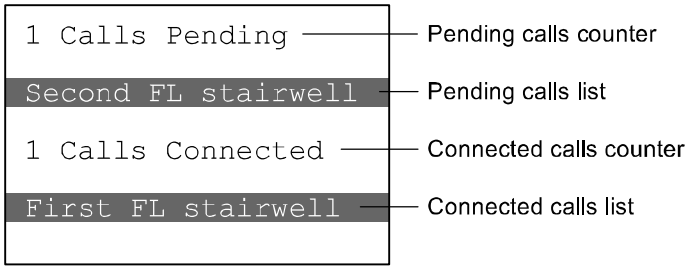

Figure 4-5: One connected call and one pending call

Notice in Figure 4-5 that the calls connected counter indicates one call connected, the first floor stairwell phone, and the pending call counter decremented to show the one remaining incoming call from the second floor stairwell phone.

4. To add the second floor stairwell phone to the conversation, press the Connect switch again. Because there is only one call pending, there is no need to scroll through incoming calls.

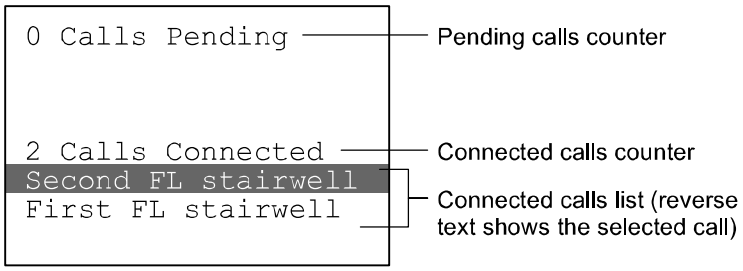

Figure 4-6: Two connected calls

The connected calls counter indicates that two phone circuits are connected, and both calls now appear in the connected calls identification list. The two stairwell phones and the 3-FTCU master handset are connected together in a party line connection, and may communicate with each other.

Up to five phone circuits can be connected in a party line connection. A full complement of connected circuits is shown in Figure 4-7.

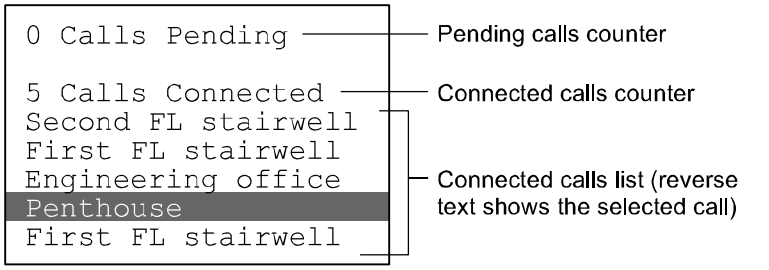

Figure 4-7: Five connected calls

Disconnecting calls

When a calling party is ready to hang up or remove a phone from its jack, the operator should disconnect the call as described below.

To disconnect a call

1. Press the Review Connected switch until the call to be disconnected is displayed in reversed text. In Figure 4-7, the Penthouse phone is selected.
2. Press the Disconnect switch. The call will be removed from the connected calls list and added to the pending calls list as shown in Figure 4-8 below. When the remote phone is hung up or removed from the phone jack, it will be removed from the calls pending list.

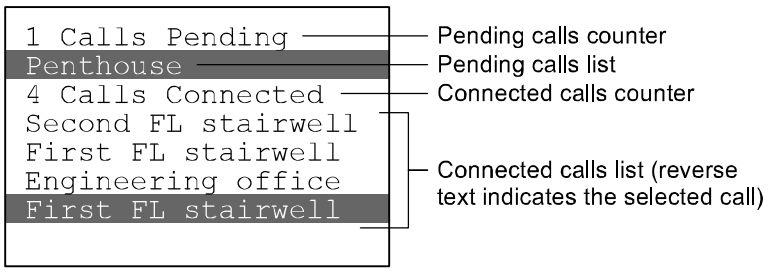

Figure 4-8: One pending call and four connected calls

3. Hanging up the master handset in the 3-FTCU transfers all connected calls to the calls pending list. If the remote phones have not been hung-up within 20 seconds, the call in buzzer will resound.

Paging by phone

The phone page feature of the 3-ASU audio source unit permits individuals with access to a remote firefighter telephone to make announcements over the emergency voice/alarm

communications system, under the supervision of the Audio Source Unit operator.

1. Establish a phone connection with the remote phone which is to issue the page.
2. Set up the areas to receive the page using one of the ASU page area functions and/or manual switch selection of additional audio zones.
3. When ready to begin the paging sequence, the ASU operator should press the Phone Page switch.
4. Begin the announcement. The 3-ASU operator can monitor the page using the master handset.

Appendix A

System addresses

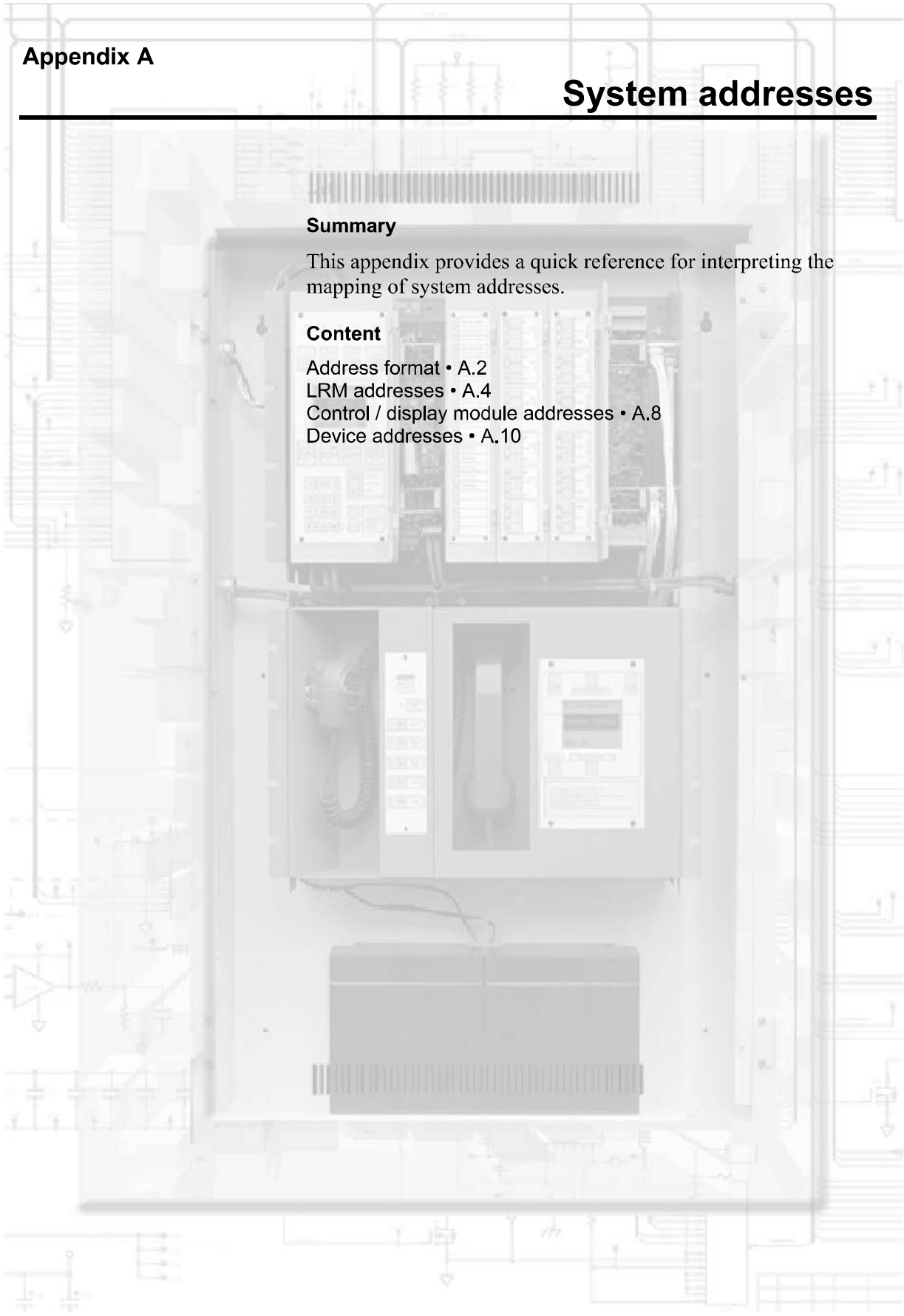

Summary

This appendix provides a quick reference for interpreting the mapping of system addresses.

Content

Address format • A.2
LRM addresses • A.4
Control / display module addresses • A.8
Device addresses • A.10

Address format

Tip: To determine a local panel's cabinet number, use the 3-LCD command menu to get the status on all the active points on the panel. When prompted for a panel number, enter 00. The panel returns the startup response point's logical address. The first two numbers of the logical address is the cabinet number.

The system derives the addresses it assigns from the panel's cabinet number and the LRM's location within the panel (see Figure A-1). The basic address format is PPCCDDDD, where:

PP is the panel's cabinet number. The cabinet number is assigned when the installer downloads the CPU database into the panel.

CC is the LRM's slot address. The cabinet number and the slot address make up the LRM's logical address.

DDDD is the device's point address. The LRM's logical address and device's point address make up the device or circuit's logical address.

The CRC Card Reader Controller and KPDISP Keypad Display are devices supported by a 3-SAC module. However, they also act as independent processors, and have their own points and pseudo points. For this reason, their device numbers are further subdivided.

You can think of a SAC device as having this address format: PPCCSSDD: SS is the CRC or KPDISP device number, as assigned during LRM configuration. DD is a point or pseudo point within the device.

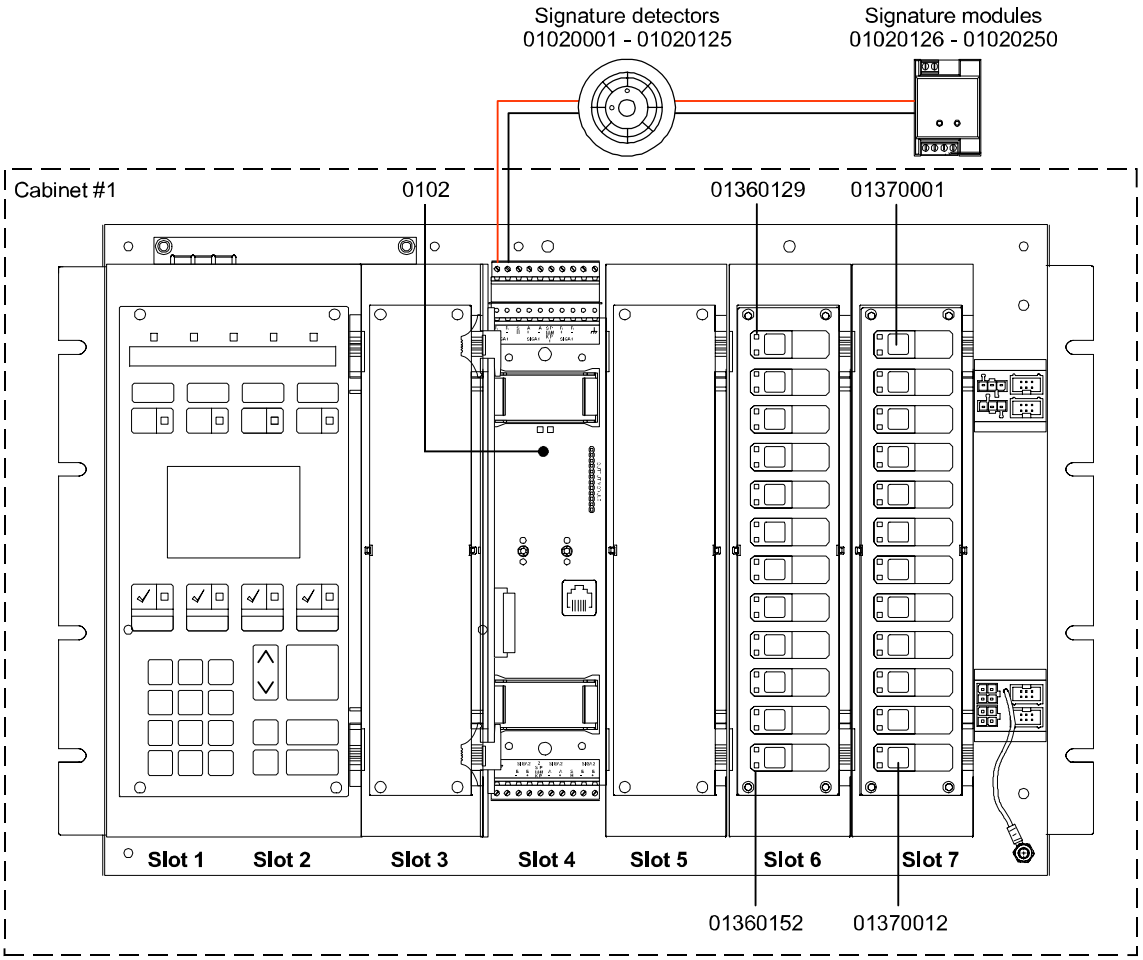

Figure A-1: Addressing example

LRM addresses

Figure A-2, Figure A-3, and Figure A-4 show the logical addresses that the system assigns to LRMs based on the panel configurations.

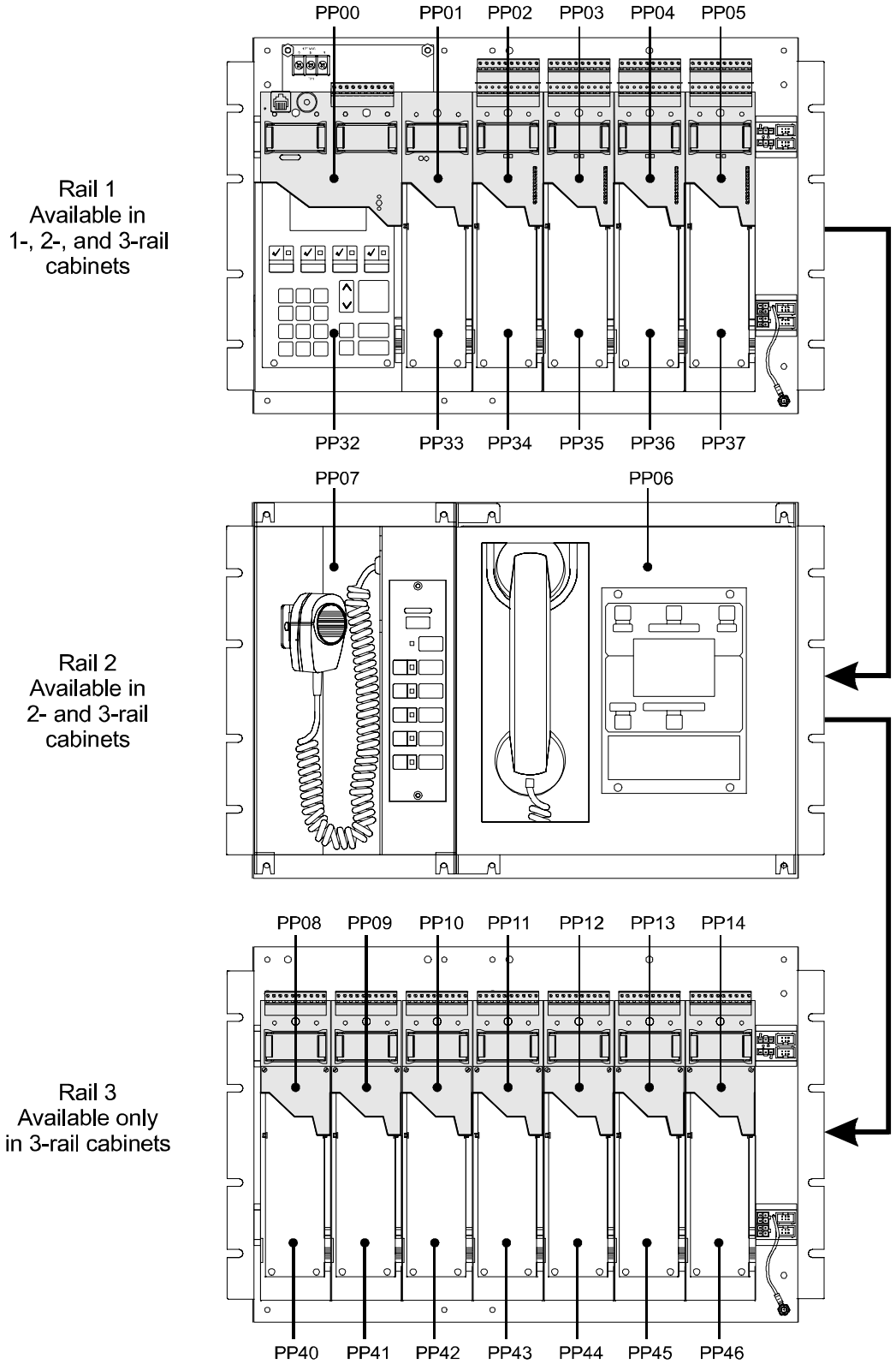

Figure A-2: LRM addresses for 3-CHAS7, 3-ASU/FT, 3-CHAS7 configuration

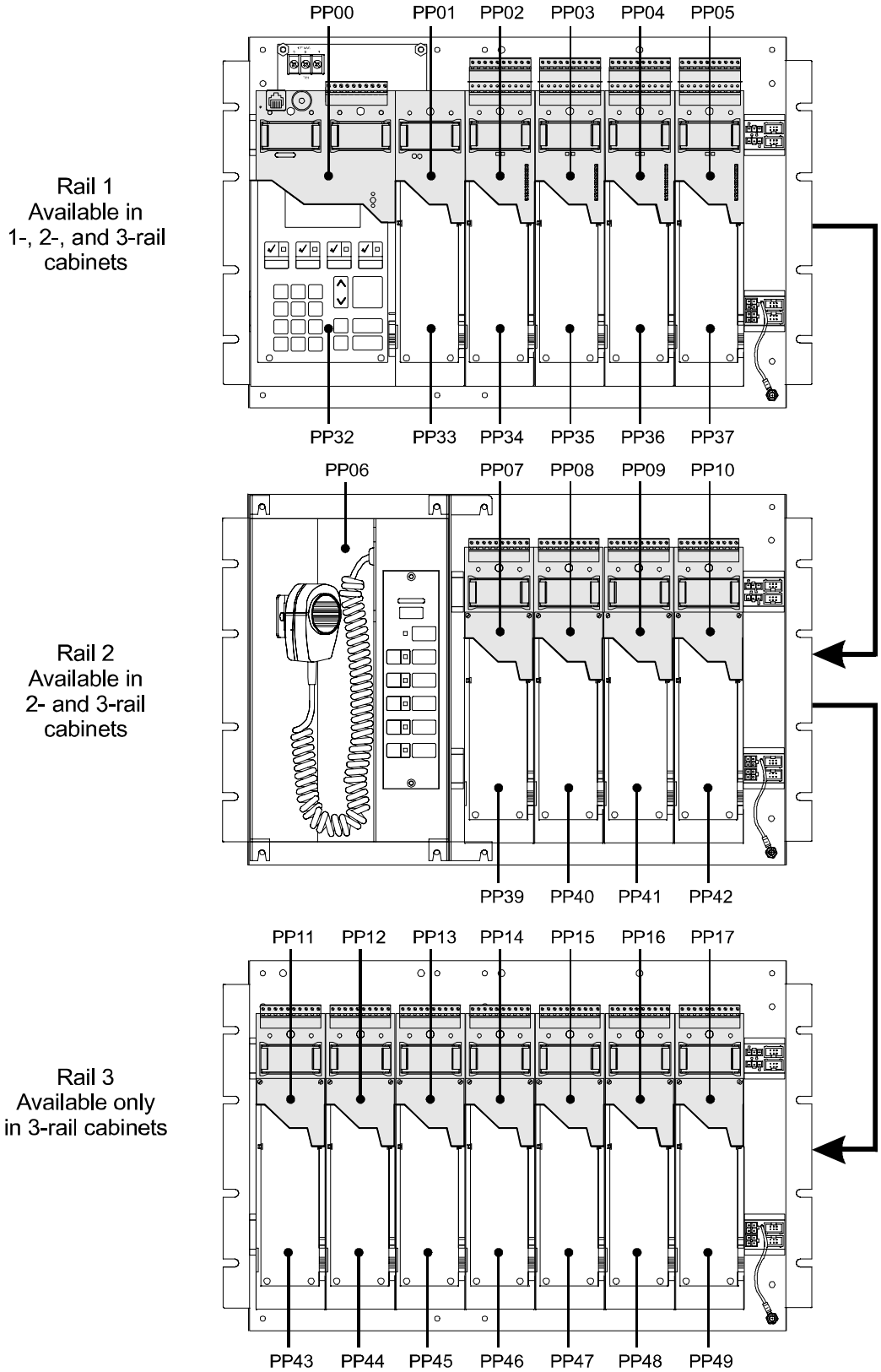

Figure A-3: LRM addresses for 3-CHAS7, 3-ASU/CHAS4, 3-CHAS7 configuration

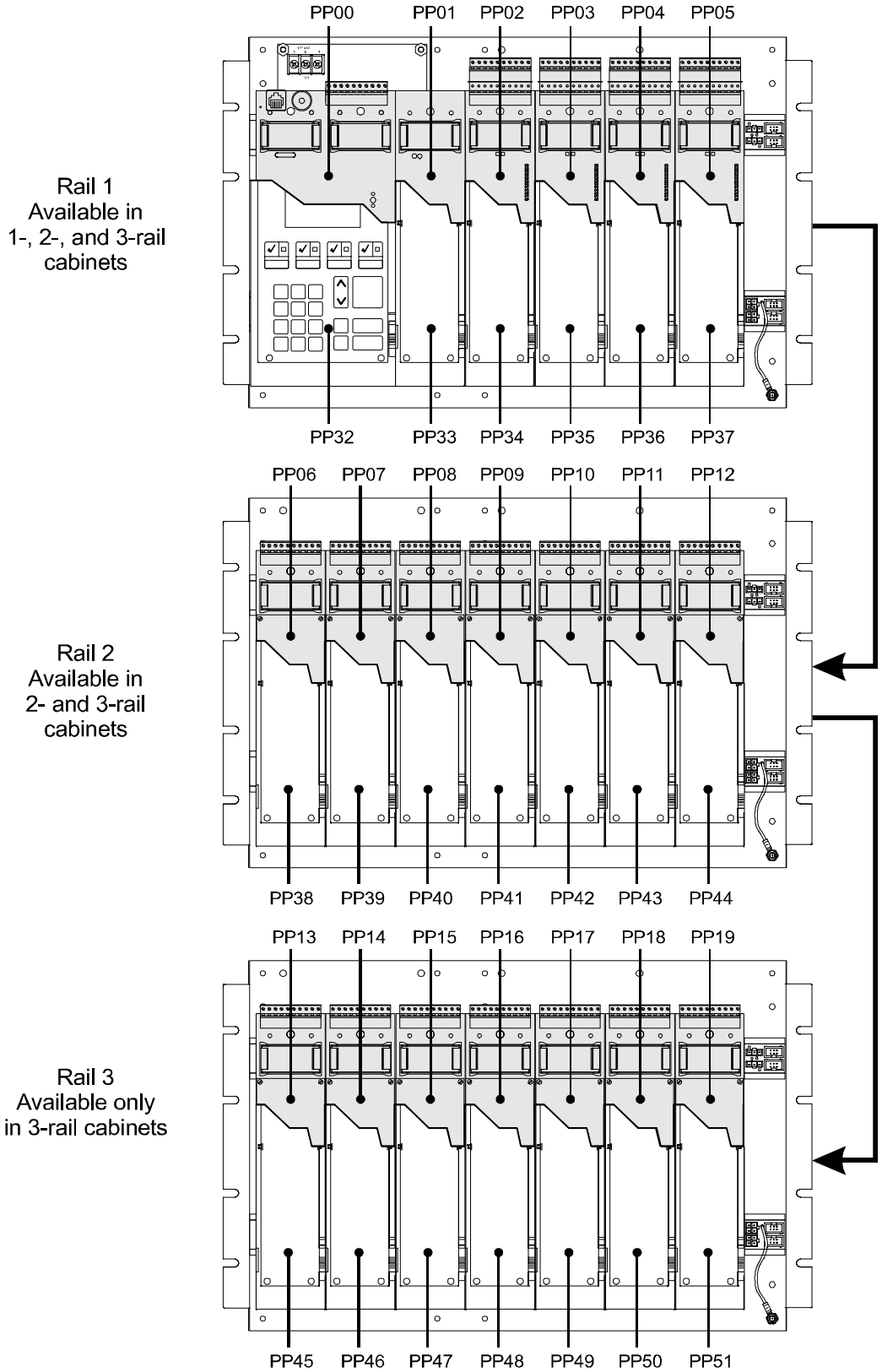

Figure A-4: LRM addresses for 3-CHAS7, 3-CHAS7, 3-CHAS7 configuration

Control / display module addresses

Figure A-5 shows the device logical addresses that the system assigns the control/display modules.

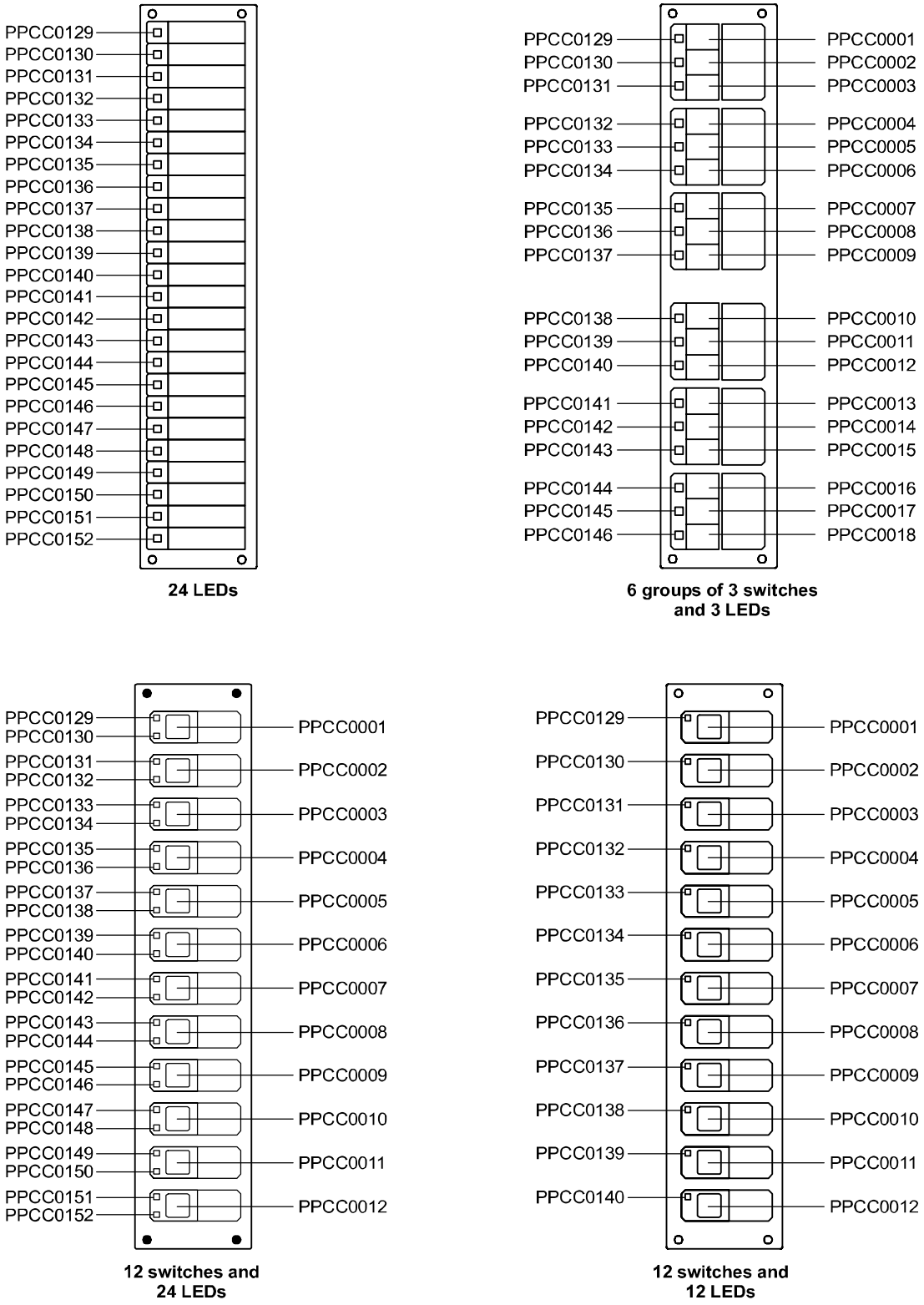

Figure A-5: Control/display module switch and LED device addresses

Device addresses

Figure A-6 shows the device logical addresses that the system assigns to various rail modules.

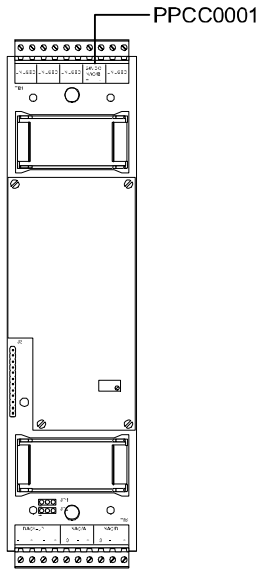

Zoned amplifier modules

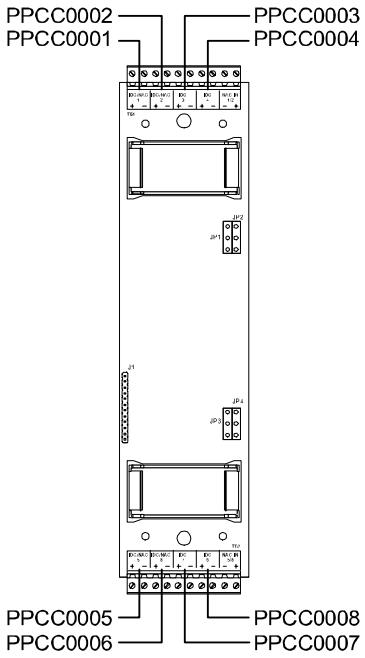

Initiating device circuit module

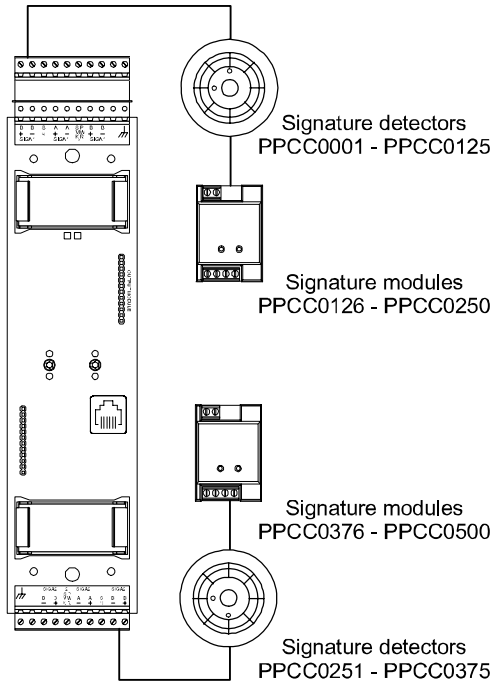

Signature controller module

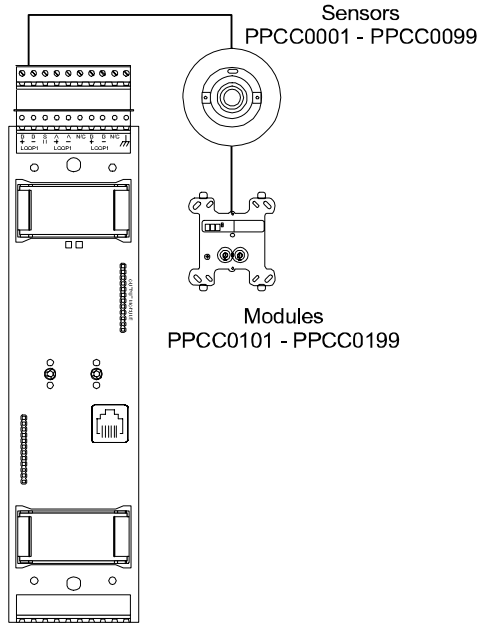

Addressable analog controller module

Figure A-6: Rail module device addresses

Appendix B

Operation sequence charts

Summary

This appendix summarizes the operation of the system in a series of convenient charts.

Content

Table B-1: Fire alarm sequence - LCD response • B.2
Table B-2: Fire alarm sequence - common feature response • B.2
Table B-3: Fire alarm sequence - zone annunciation • B.3
Table B-4: Fire alarm sequence - notification appliance circuits (default operation) • B.3
Table B-5: Fire alarm sequence - off premises connection • B.3
Table B-6: Trouble sequence - LCD response [1] • B.4
Table B-7: Trouble sequence - common feature response • B.4
Table B-8: Trouble sequence - annunciation • B.4
Table B-9: Trouble sequence - annunciation • B.5

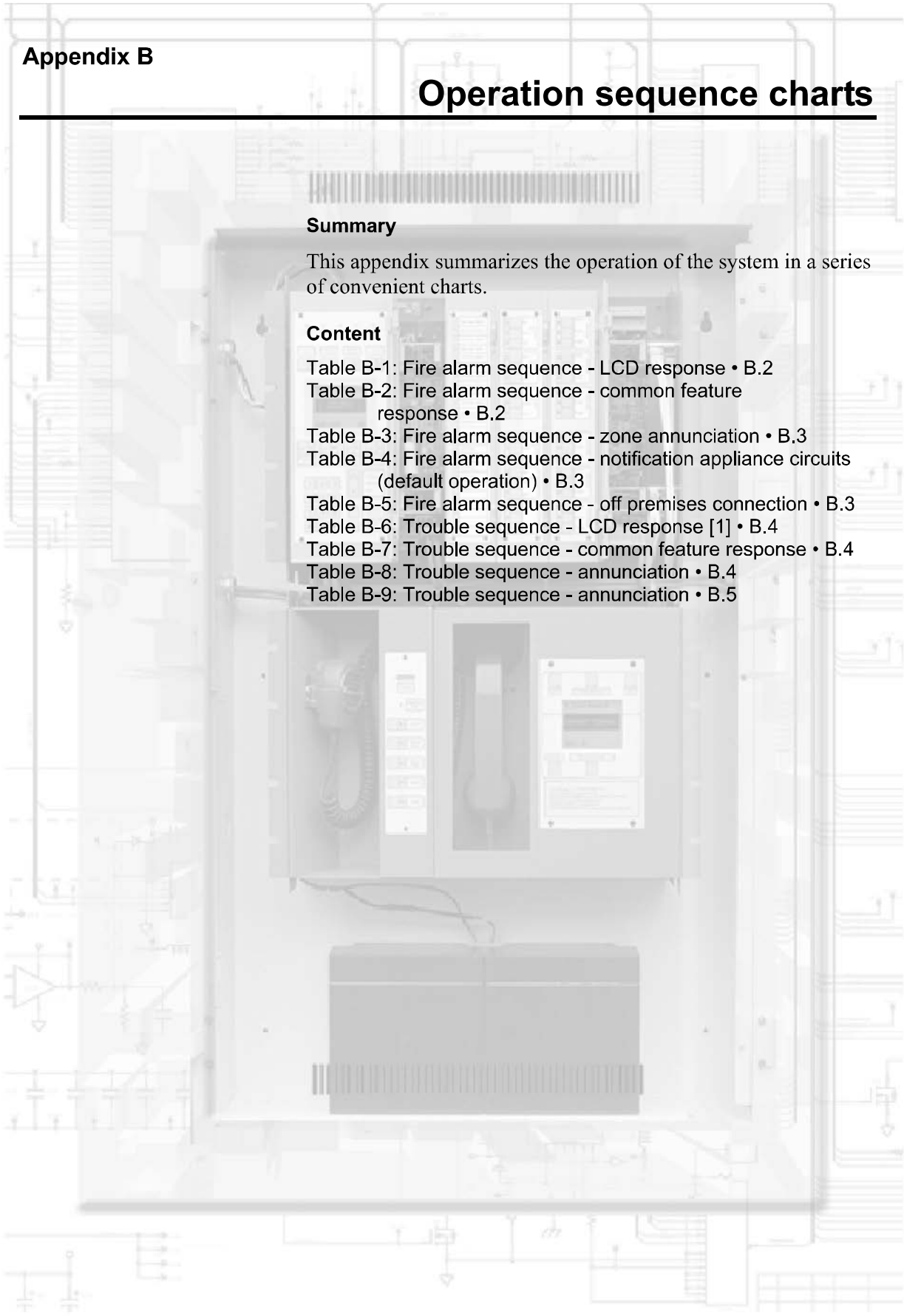

Table B-1: Fire alarm sequence - LCD response

Event ► / LCD display ▼	Normal	First alarm	Subsequent alarm	Alarm restore	Reset
Power LED	On	On	On	On	On
Alarm LED	Off	Flashing	Flashing	Flashing	Off
Trouble LED	Off	Off	Off	Off	Off
Panel buzzer	Off	On	On	Off	Off
LCD text display	Title screen	Current event and last window	Updates last event window	No change event latched until reset	Title screen
Alarm counter on LCD	0000	0001	0002	0002	0000
Alarm history counter on LCD	0000	0000	0000	0000	0001
Reset switch	Enabled	Disabled for silence Inhibit period	Enabled after Inhibit period expires	No change	Disabled

Table B-2: Fire alarm sequence - common feature response

Event ► / LCD display ▼	Normal	First alarm	Subsequent alarm	Alarm restore	Reset
Alarm silence inhibit timer	Off	Timer starts	Runs until expired	No change	Off
Alarm silence LED	Off	Yellow after silence	Yellow after silenced	No change	Off
Alarm silence timer	Off	Timer starts, alarm silenced if timer expires	Restarts, alarm silenced if timer expires	No change	Off
Page inhibit timer	Off	Timer starts, prohibits paging until timer expires	No change	No change	Off
Auto general alarm signal timer (recycle)	Off	Timer starts, total EVAC if timer expires	No change unless canceled by user	No change	Off

Table B-3: Fire alarm sequence - zone annunciation

Event► LCD display▼	Normal	First alarm	Subsequent alarm	Alarm restore	Reset
Panel annunciator	Off	On red	On red	No change	Off
Printers	Ready	Prints event	Prints event	Prints on restoration	Off
History logger	Ready	Logs event	Logs event	Logs restoration	Ready

Table B-4: Fire alarm sequence - notification appliance circuits (default operation)

Event► LCD display▼	Normal	First alarm	Subsequent alarm	Alarm restore	Reset
General alarm audible notification circuits	Off	Sounds alarm	No change, resounds alarm if silenced	No change	Off
General alarm visual notification circuits	Off	Displays alarm indication	Displays alarm indication	Displays alarm indication	Off

Table B-5: Fire alarm sequence - off premises connection

Event► LCD display▼	Normal	First alarm	Subsequent alarm	Alarm restore	Reset
Reverse polarity alarm output	Off	Reverses polarity	No change	No change	Reverses polarity back to normal
Common alarm relay	Off	On	No change	No change	Off
Auxiliary control relays	Off	On as programmed	On as programmed	No change	Off

Table B-6: Trouble sequence - LCD response [1]

Event ► LCD display ▼	Normal	First trouble - trouble queue	First alarm w/active trouble - alarm queue	Notes
Current event window	Off	Trouble message	Alarm message	Alarm has priority
Last event window	Off	Trouble message	Alarm message	Alarm has priority
Queue LED	Off	Flashes yellow	Flashes red	

[1] 3-LCD and 3-LCDXL1 modules

Table B-7: Trouble sequence - common feature response

Event ► LCD display ▼	Normal	First trouble	First alarm w/active trouble	Notes
Panel buzzer	Off	Sounds trouble	Sounds alarm	Alarm has priority
Panel Silenced LED	Off	Off	Off	Yellow when local buzzer silenced
3-CPU3 Trouble Relay	On	Off	Off	Relay powered in normal state
3-CPU3 Alarm Relay	Off	Off	On	Remains on until panel reset

Table B-8: Trouble sequence - annunciation

Event ► LCD Display ▼	Normal	First trouble	First Alarm w/Active trouble	Notes
Panel zone LED	Off	On yellow	On red	
Remote annunciator alarm zone LED	Off	On yellow	Steady red	Alarm has priority if same LED is also used to annunciate trouble
Printers	Ready	Prints trouble message	Prints alarm message	Time, date, event message, & device data
History logger	Ready	Logs event	Logs event	Time, date, event message, & device data

Table B-9: Trouble sequence - annunciation

Event ► LCD display ▼	Normal	First trouble	First Alarm w/active trouble	Notes
Off premises module (3-OPS) 3 circuit configuration	All circuits normal polarity	Trouble circuit reverses polarity, module trouble relay operates	Alarm and trouble circuits reverse polarity	
Off premises module 1 circuit configuration	Normal polarity	Circuit opens, (module trouble relay operates)	Circuit reverses polarity (trouble relay restores)	Alarm has priority
Auxiliary control relays	Off	On as programmed	On as programmed	

Index

3

3-ASU
  controls and indicators • 3.2
  operating • 3.4
3-FTCU
  controls and indicators • 4.2
  operation • 4.4
3-LCD controls and indicators • 2.2

A

Active points
  identifying • 2.9
Alarm silence/reset inhibit timer • 1.14
Alternate message routing
  activating • 2.22
Alternate sensitivity
  changing to primary • 2.21
And groups
  disabling • 2.10
  enabling • 2.11
Arming security partitions • 2.14
Audio Source Unit
  paging sequence • 3.5
  paging with remote microphone • 3.6
  phone page • 3.5
Automatic alarm silence timer • 1.15
Automatic general alarm (GA) timer • 1.15

B

Button
  operation • 1.15
Buttons
  disabling • 2.12
  enabling • 2.13
Bypassing security devices • 2.18

C

Canceling the test • 2.32, 2.34
Changing holidays • 2.30
Changing the output state of a relay or LED • 2.23
Changing the smoke detector sensitivity level • 2.21
Changing user access level passwords • 2.28
Clearing the panel history file • 2.31

D

Date
  entering • 2.27
Default passwords • 2.28
Deleting holidays • 2.30
Device Maintenance report
  creating • 2.24
  description • 2.24
Devices
  disabling • 2.12
  enabling • 2.13
Dirty head report
  creating • 2.24
Disabled points
  identifying • 2.9
Disabling hardware components • 2.12
Disabling logical devices • 2.10
Disarming security partitions • 2.16

E

Enabling hardware components • 2.13
Enabling logical devices • 2.11

G

Guard patrol • 1.13
Guard Patrol groups
  disabling • 2.10
  enabling • 2.11
Guard patrols
  activating • 2.20
  restoring • 2.20

H

Hardware components
  disabling • 2.12
  enabling • 2.13
High priority
  description • 2.23
History report
  creating • 2.24
Holidays • 1.15
  scheduling • 2.30

I

Identifying active or disabled points • 2.9

L

Lamp test • 2.35
Latch priority
  description • 2.23
LEDs
  changing the state of • 2.23
  disabling • 2.12
  enabling • 2.13
Logical devices
  disabling • 2.10
  enabling • 2.11
Low priority
  description • 2.23

M

Matrix groups
disabling • 2.10
enabling • 2.11
Medium priority
description • 2.23
Modcom Compliance report
creating • 2.24
description • 2.24

P

Panel sounder test • 2.35
Password protection • 1.2
Passwords
changing • 2.28
default • 2.28
Primary message routing
restoring • 2.22
Primary sensitivity
changing to alternate • 2.21
Putting a service group into test • 2.32
Putting a Signature device into test • 2.34

R

Rail modules
disabling • 2.12
enabling • 2.13
Relays
changing the state of • 2.23
Removing bypasses from security devices • 2.19
Reports • 2.24
Restarting a panel • 2.29
Restoring security partitions • 2.17
Revisions report
creating • 2.24
description • 2.24

S

Scheduling holidays • 2.30
Security devices
bypassing • 2.18
removing bypass • 2.19
Security partitions
arming • 2.14
disarming • 2.16
restoring • 2.17
Service groups
disabling • 2.10
enabling • 2.11
Set priority
description • 2.23
Setting the system time and date • 2.27
Signature devices, testing • 2.34
Smoke detector sensitivity
description • 2.21
Smoke detector sensitivity level
changing • 2.21
System timers • 1.14

T

Testing alarm input devices • 2.32
Testing Signature devices • 2.34
Testing, lamp • 2.35
Testing, LEDs • 2.35
Testing, panel sounder • 2.35
Time controls • 1.15
holidays • 1.15
Time Controls
disabling • 2.10
enabling • 2.11
Time of day
entering • 2.27

Z

Zone groups
disabling • 2.10
enabling • 2.11

EST3
Installation and Service Manual

P/N 270380 • REV 12.0 • ISS 26APR12

DEVELOPED BY	UTC Fire & Security 8985 Town Center Parkway Bradenton, FL 34202
COPYRIGHT NOTICE	© 2012 UTC Fire & Security. All rights reserved. This manual is copyrighted by UTC Fire & Security. You may not reproduce, translate, transcribe, or transmit any part of this manual without express, written permission from UTC Fire & Security. This manual contains proprietary information intended for distribution to authorized persons or companies for the sole purpose of conducting business with UTC Fire & Security. Unauthorized distribution of the information contained in this manual may violate the terms of the distribution agreement.
TRADEMARKS	Microsoft, Microsoft Mouse, Microsoft Windows, Microsoft Word, and Microsoft Access are either registered trademarks or trademarks of Microsoft Corporation.

Content

Important information • iv
UL 864 programming requirements • vi
About this manual • viii
The EST3 library • x
Related documentation • xi

Chapter 1 **System overview • 1.1**
System description • 1.2
Audio subsystem description • 1.6
Digital network subsystem • 1.16
Foreign language support • 1.22
Signature series devices • 1.26
Network applications • 1.29
Audio applications • 1.33
Firefighter phone system • 1.42

Chapter 2 **Security applications • 2.1**
Security equipment • 2.2
Certificate installations • 2.8
Multiple 3-MODCOM modules • 2.13
Multiple site security and access • 2.14
Multiple tenant security • 2.17
Secure access • 2.21

Chapter 3 **Access control applications • 3.1**
Access control equipment • 3.2
Anti-passback • 3.11
Central monitoring station • 3.14
Common door access • 3.16
Delayed egress • 3.18
Elevator control • 3.21
Emergency exit door • 3.24
Handicap access door • 3.26
Maglock peripherals • 3.28
Multiple card readers • 3.30
Muster • 3.32
Power for continuous locks • 3.35
Power for intermittent locks • 3.37
Power from an AC source • 3.39
Power from a remote source • 3.42
Remote controls • 3.45
Two-person rule • 3.47

Chapter 4 **Centralized audio applications • 4.1**
Equipment required • 4.2
ATPC Amplifier Terminal Panel Cabinet • 4.3
ATP Amplifier Terminal Panel • 4.6
Audio amplifiers • 4.8
URSM Universal Riser Supervisory Module • 4.10

ATP external battery charger • 4.20
Amplifier backup • 4.22
Branch speaker wiring • 4.25
Troubleshooting • 4.27

Chapter 5 **Installation • 5.1**
Installation overview • 5.3
UL 864 NAC signal synchronization • 5.6
Creating an initial startup version of the project database • 5.16
System installation sequence • 5.18
Preliminary field wiring testing • 5.19
Chassis installation in EIA 19-inch racks • 5.22
ATCK Attack Kit for cabinets • 5.23
Local rail module installation • 5.24
3-MODCOM Modem Communicator module • 5.26
3-SAC Security Access Control module • 5.40
3-AADC1 Addressable Analog Driver Controller and IRC-3 • 5.41
AC power and DC battery wiring • 5.42
Connecting auxiliary/booster power supplies • 5.44
Connecting the PT-1S impact printer • 5.46
Adjusting amplifier output levels • 5.49
Connecting a CDR-3 Zone Coder for coded tone output • 5.50
Connecting an external modem for use with the Remote Diagnostics Utility • 5.53
Running the RPM and distributing profiles • 5.55

Chapter 6 **Power-up and testing • 6.1**
Cabinet power-up procedure • 6.3
Runtime and system errors • 6.4
Initial and reacceptance test procedures • 6.6
Control and emergency communications equipment testing • 6.7
Detector, input module, and output module testing • 6.18
Initiating device testing • 6.21
Notification appliance testing • 6.23
Record of completion • 6.24

Chapter 7 **Preventive maintenance • 7.1**
General • 7.2
Preventive maintenance schedule • 7.3
Signature device routine maintenance tips • 7.8
Signature detector cleaning procedure • 7.10
SIGA2 replacement procedures • 7.13
System trouble and maintenance log • 7.14

Chapter 8 **Service and troubleshooting • 8.1**
Overview • 8.3
Hardware problems • 8.5
Modules • 8.7
Audio components • 8.20
Pseudo point descriptions • 8.24
Signature data circuit (SDC) operation • 8.35
Basic Signature data circuit troubleshooting • 8.37
Signature controller modules • 8.47
Device troubleshooting • 8.49

Signature diagnostic tools • 8.51
DSDC status • 8.65
Addressable analog diagnostic tools • 8.70
3-AADC1 Addressable Analog Driver Controller • 8.74
Addressable analog device troubleshooting • 8.75
Wiring problems • 8.77

Appendix A **System addresses • A.1**
Address format • A.2
LRM addresses • A.4
Control / display module addresses • A.9
Device addresses • A.10

Appendix B **System calculations • B.1**
Network data riser limits • B.2
Signature data circuit wire length • B.5
Notification appliance circuit calculations • B.11
25 or 70 Vrms NAC wire length • B.17
Addressable analog circuit wire length • B.19
Cabinet battery • B.20
SAC bus power • B.21
CPU memory • B.26
Fiber optic cable worksheet • B.28

Appendix C **Listing requirements • C.1**
NFPA standards • C.2
Minimum requirements for UL security applications • C.3
UL and ULC requirements • C.10

Y **Glossary • Y.1**

Z **Index • Z.1**

Important information

Limitation of liability

This product has been designed to meet the requirements of NFPA Standard 72; Underwriters Laboratories, Inc., Standard 864; and Underwriters Laboratories of Canada, Inc., Standard ULC S527. Installation in accordance with this manual, applicable codes, and the instructions of the Authority Having Jurisdiction is mandatory. UTC Fire & Security shall not under any circumstances be liable for any incidental or consequential damages arising from loss of property or other damages or losses owing to the failure of UTC Fire & Security products beyond the cost of repair or replacement of any defective products. UTC Fire & Security reserves the right to make product improvements and change product specifications at any time.

While every precaution has been taken during the preparation of this manual to ensure the accuracy of its contents, UTC Fire & Security assumes no responsibility for errors or omissions.

FCC warning

This equipment can generate and radiate radio frequency energy. If this equipment is not installed in accordance with this manual, it may cause interference to radio communications. This equipment has been tested and found to comply within the limits for Class A computing devices pursuant to Subpart B of Part 15 of the FCC Rules. These rules are designed to provide reasonable protection against such interference when this equipment is operated in a commercial environment. Operation of this equipment is likely to cause interference, in which case the user at his own expense, will be required to take whatever measures may be required to correct the interference.

Industry Canada information

Note: The Industry Canada label identifies certified equipment. This certification means that the equipment meets certain telecommunications network protective, operational, and safety requirements. Industry Canada does not guarantee the equipment will operate to the user's satisfaction.

Before installing this equipment, users should ensure that it is permissible to be connected to the facilities of the local telecommunications company. The equipment must also be installed using an acceptable method of connection. The customer should be aware that compliance with the above conditions may not prevent degradation of service in some situations.

Repairs to certified equipment should be made by an authorized Canadian maintenance facility designated by the supplier. Any repairs or alterations made by the user to this equipment, or equipment malfunctions, may give the telecommunications company cause to request the user disconnect the equipment.

Users should ensure for their own protection that the electrical ground connections of the power utility, telephone lines, and internal metallic water pipe system, if present, are connected together. This precaution may be particularly important in rural areas.

Caution: Users should not attempt to make such connections themselves, but should contact the appropriate electric inspection authority, or electrician, as appropriate

---

Note: The Load Number (LN) assigned to each terminal device denotes the percentage of the total load to be connected to a telephone loop that is used by the device, to prevent overloading. The termination on a loop may consist of any combination of devices subject only to the requirements that the sum of the Load Numbers of all the devices does not exceed 100.

UL 864 programming requirements

NOTICE TO USERS, INSTALLERS, AUTHORITIES HAVING JURISDICTION, AND OTHER INVOLVED PARTIES

This product incorporates field-programmable software. In order for this product to comply with the requirements in the *Standard for Control Units and Accessories for Fire Alarm Systems* (UL 864) certain programming features or options must be limited to specific values or not used at all as indicated below.

Programmable feature or option	Permitted in UL 864? (Y/N)	Possible settings	Settings permitted in UL 864
Telephone line supervision	Y	No Yes	Yes
Second telephone line	Y	No Yes	No [1] Yes
Trouble Resound	Y	00:00:00 to 99:59:59	00:00:00 [2] to 24:00:00
AC Power Delay	Y	Disabled 01:00 to 45:00	01:00 to 03:00
Event message routing	Y	All Cabinets No Cabinets User defined routes (1 to 15)	All Cabinets No Cabinets [3] User defined routes (1 to 15) [4]
Event message display filtering: Alarm, Supervisory, and Trouble options	Y	Enabled Disabled	Enabled Disabled [5]
Delays (programmed in rules)	Y	0 to 240 seconds	0 to 240 seconds [6]
CMS event reporting priority (programmed in rules)	Y	1 to 255	1 to 255 [7]
CMS activate and restore messages (programmed in rules)	Y	Send on activation Send on restoration	Activation and restoration triggers must match the message type
AND Group member device types, Activation event: Q1 - Alarm	Y	GENALARM SMOKE SMOKEVFY HEAT PULL STAGEONE STAGETWO WATERFLOW	GENALARM SMOKE SMOKEVFY [9] HEAT PULL STAGEONE [9] STAGETWO [9] WATERFLOW
AND group device activation count	Y	1 to 255	1 to 255 [10]

Programmable feature or option	Permitted in UL 864? (Y/N)	Possible settings	Settings permitted in UL 864
SIGA-IO(-MIO) modules: Personality codes 35 and 36	N	N/A	N/A
CO Supervisory	N	Latching / nonlatching	N/A
CO Monitor	N	Latching / nonlatching	N/A
Matrix groups: Device activation count	Y	3 to 10	3 to 10 [10]

[1] Allowed only when the supervising station supervises the telephone line and annunciates fault conditions within 200 seconds.

[2] Allowed only on control panels that transmit trouble event signals off premises.

[3] Allowed only with monitor device types and switches.

[4] Allowed only if user route includes the control panel.

[5] Allowed only on nonrequired remote annunciators.

[6] Allowed only when setting does not prevent the activation or transmission of alarm or supervisory signals within 10 seconds or trouble signals within 200 seconds.

[7] When priorities are used, alarm events must have a higher priority than supervisory and trouble events.

[8] Not allowed in Zone groups that are used to initiate the release of extinguishing agent or water.

[9] Not allowed in AND groups that are used to initiate the release of extinguishing agent or water.

[10] A minimum device activation count of 2 is required if the group is used to initiate the release of extinguishing agent or water.

About this manual

This manual provides information on how to properly install, wire, and maintain the EST3 integrated system and related components. This manual applies to the following EST3 models:

- EST3
- EST3R
- EST3-230
- EST3R-230

Model number JB-TBZL-EST3, used to describe the EST3 life safety system in the Chinese marketplace, carries the same UL listings and approvals as EST3 when installed and configured using the subcomponents and methodologies described in this manual.

Organization

Chapter 1: System overview: a descriptive overview of the components and subsystems that comprise an EST3 system.

Chapter 2: Security applications: covers security applications. This chapter contains block diagrams that show the components required to create specific security systems.

Chapter 3: Access control applications: covers access control applications. Like Chapter 2, this chapter contains block diagrams and descriptions of specific access control systems.

Chapter 4: Centralized audio applications: describes the equipment and configuration required to create centralized audio for a site.

Chapter 5: Installation: installation information for system components and applications that supplement the instructions provided on individual component installation sheets.

Chapter 6: Power-up and testing: information and procedures necessary to perform initial system power-up and acceptance testing.

Chapter 7: Preventive maintenance: lists the required scheduled maintenance items and procedures.

Chapter 8: Service and troubleshooting: a comprehensive set of procedures and tables to aid certified technical personnel in servicing and troubleshooting the system.

Appendices A, B, and C provide supplementary information about system addressing, calculations, and compatibility.

Safety information

Important safety admonishments are used throughout this manual to warn of possible hazards to persons or equipment.

WARNING: Warnings are used to indicate the presence of a hazard which will or may cause personal injury or death, or loss of service if safety instructions are not followed or if the hazard is not avoided.

Caution: Cautions are used to indicate the presence of a hazard which will or may cause damage to the equipment if safety instructions are not followed or if the hazard is not avoided.

The EST3 library

EST3 documents

A library of documents and multimedia presentations supports the EST3 life safety system. A brief description of each is provided below.

EST3 Installation and Service Manual (P/N 270380): Gives complete information on how to install and service the EST3 hardware. The manual also includes installation information on selected Signature Series components.

SDU Online Help (P/N 180653): Provides full online support for configuring and programming a system using the System Definition Utility program.

EST3 System Operation Manual (P/N 270382): Provides detailed information on how to operate the system and system components.

EST3 Smoke Management Application Manual (P/N 270913): Provides information for designing, programming, and testing an EST3 smoke control system.

EST3 ULI ULC Compatibility Lists (P/N 3100427): Lists the appliances, devices, and accessories that are compatible with EST3.

Other documents

In addition to documents in the EST3 library, you may find the following documents useful.

Signature Series Detector Application Bulletin (P/N 270145): Provides additional applications information on the Signature series smoke and heat detector applications.

Signature Series Component Installation Manual (P/N 270497): Contains detailed mounting and wiring information for all Signature series devices.

Speaker Application Guide (P/N 85000-0033): Provides information on the placement and layout of speakers for fire alarm signaling and emergency voice communications.

Strobe Applications Guide (P/N 85000-0049): Provides information on the placement and layout of strobes for fire alarm signaling.

Related documentation

National Fire Protection Association
1 Batterymarch Park
P.O. Box 9101
Quincy, MA 02269-9101

- NFPA 70 National Electric Code
- NFPA 72 National Fire Alarm and Signaling Code
- NFPA 11 Low-Expansion Foam Systems
- NFPA 11A Medium- and High-Expansion Foam Systems
- NFPA 12 Carbon Dioxide Extinguishing Systems
- NFPA 13 Sprinkler Systems
- NFPA 15 Water Spray Fixed Systems for Fire Protection
- NFPA 16 Deluge Foam-Water Sprinkler and Foam-Water Spray Systems
- NFPA 17 Dry Chemical Extinguishing Systems

Underwriters Laboratories, Inc.
333 Pfingsten Road
Northbrook, IL 60062-2096

- UL 38 Manually Actuated Signaling Boxes
- UL 217 Single and Multiple Station Smoke Alarms
- UL 228 Door Closers/Holders for Fire Protective Signaling Systems
- UL 268 Smoke Detectors for Fire Alarm Signaling Systems
- UL 268A Smoke Detectors for Duct Applications
- UL 294 Access Control System Units
- UL 346 Waterflow Indicators for Fire Protective Signaling Systems
- UL 365 Police Station Connected Burglar Alarm Units and Systems
- UL 464 Audible Signaling Appliances
- UL 521 Heat Detectors for Fire Protective Signaling Systems
- UL 609 Local Burglar Alarm Units and Systems
- UL 636 Holdup Alarm Units and Systems
- UL 681 Installation and Classification of Burglar and Holdup Alarm Systems
- UL 827 Central-Station Alarm Services
- UL 864 Standard for Control Units and Accessories for Fire Alarm Systems
- UL 1076 Proprietary Buglar Alarm Units and Systems
- UL 1481 Power Supplies for Fire Protective Signaling Systems

UL 1610 Central-Station Burglar-Alarm Units

UL 1635 Digital Alarm Communicator System Units

UL 1638 Visual Signaling Appliances

UL 1971 Standard for Signaling Devices for the Hearing Impaired

UL 2075 Gas and Vapor Detectors and Sensors

Underwriters Laboratories of Canada
7 Crouse Road
Scarborough, ON
Canada M1R 3A9

CSA C22.1 Canadian Electrical Code Part 1

ULC S527 Standard for Control Units for Fire Alarm Systems

ULC S524 Standard for the Installation of Fire Alarm Systems

ULC S536 Standard for the Inspection and Testing of Fire Alarm Systems

ULC S537 Standard for the Verification of Fire Alarm Systems

ULC ORD–C693–1994 Central Station Fire Protective Signaling Systems and Services

CAN/ULC-S301 Standard for Central and Monitoring Station Burglar Alarm Systems

CAN/ULC-S302 Standard for Installation and Classification of Burglar Alarm Systems for Financial and Commercial Premises, Safes, and Vaults

CAN/ULC-S303 Standard for Local Burglar Alarm Units and Systems

PLUS: Requirements of state and local building codes and the local authority having jurisdiction.

Chapter 1

System overview

Summary

This chapter provides a descriptive overview of the components and subsystems that comprise a system.

Content

System description • 1.2
- System features • 1.3
- Minimum system requirements • 1.4
- System construction • 1.4

Audio subsystem description • 1.6
- Network audio riser wiring • 1.6
- Amplifiers • 1.7
- Backup amplifiers • 1.8
- 3-ASU Audio Source Unit • 1.9
- Firefighter phone • 1.15

Digital network subsystem • 1.16
- Network data riser wiring • 1.16
- Class B network data risers • 1.16
- Class A network data risers • 1.17
- Download connections • 1.18
- Downloading database files over the network • 1.19

Foreign language support • 1.22
- Printer use with foreign languages • 1.22
- Bilingual language support • 1.22
- Display device language support • 1.23

Signature series devices • 1.26

Network applications • 1.29
- Network layout • 1.29
- Feature/function domain • 1.30

Audio applications • 1.33
- Audio channels • 1.34
- Manual audio zone selection • 1.38
- Messages • 1.39

Firefighter phone system • 1.42
- Five phone off-hook limit • 1.42
- One phone per circuit • 1.42
- Five phones per circuit • 1.43
- Limited number of portable telephone handsets • 1.43

System description

EST3 is designed using modular hardware and software components to facilitate rapid configuration, installation, and testing. Most network components are provided as local rail modules (LRMs) that plug into the rail chassis assemblies. Rail chassis assemblies are available to meet most any application.

Rail modules are used for data processing, intrapanel communication of command/control data, response data, audio signal processing, and power distribution. Each rail module provides an interface to support a control/display module that can be mounted on the front of the module. Most field wiring is terminated using removable terminal strips for easy installation and servicing of modules.

Cabinets are available in a variety of sizes. The smallest (3-CAB5), in addition to the central processor module and primary power supply module, supports two rail modules and three control/display modules. The largest, the 3-CAB21 supports as many as 18 rail modules and 19 control/display modules.

An EST3 cabinet can be configured as a stand-alone system or as part of a network which supports up to 64 cabinets on a peer-to-peer Class A or B token ring network. Below is a partial list of local rail modules that can be incorporated into a system:

- Central Processor module (CPU). One is required for each panel. Several models of CPU are available. See the current compatibility lists for details.
- Primary Power Supply module (3 PPS/M, 3 BPS/M, or 3 BBC/M). One power supply module is required for each panel.
- Main LCD Display module (LCD). One LCD is required to provide a point of control for the entire network. Additional displays can be added to any CPU module for additional points of control or annunciation. Several LCD models are available. See the current compatibility lists for details.

Additional control/display modules as required by the application:

- 3-BPS/M Booster Power Supply module
- 3-MODCOM Modem Communicator module
- 3-SAC Security Access Control module
- 3-SSDC(1) Signature Driver Controller module
- 3-AADC(1) Analog Addressable Driver Controller module
- 3-IDC8/4 Initiating Device Circuit module
- 3-OPS Off-Premises Signaling module
- 3-ZAxx Zoned Amplifier modules

The audio and firefighter phone functions use a different hardware format, providing operator controls and storage for the microphone and telephone handset in a chassis configuration.

System features

Each cabinet in the system provides local control, display, power supply, and communication functions. Each cabinet has the following capacities:

- 10 addressable device circuits (Signature and addressable analog combined)
- 120 traditional input / output zones
- 4 Class B (2 Class A) security / access control communication (SAC) busses
- 10 modem / dialer cards, each with two telephone lines
- 2 RS-232 external peripheral device ports
- 456 LED annunciation points
- 342 input switches

In addition, the EST3 system has these global features:

- Firefighter telephone
- Custom programmability and user-friendly front panel
- Class B (Style B), initiating device circuits (IDC)
- Event reporting by alarm, trouble, supervisory, or monitor mode and message display routing
- Dead front construction
- Supports networking — up to 64 nodes may be connected in a regenerative Class A or Class B token ring
- Fast response time, less than three seconds from initial alarm to device activation on a fully loaded system over the network
- Flash memory on controller modules to facilitate quick firmware upgrades
- Supports 255 security partitions
- Multiplexed eight-channel digital audio system
- Transient protected field wiring
- Class B (Style Y) or Class A notification appliance circuits
- Ground fault detection by panel, Signature data circuit, and Signature modules
- Switch mode power supply

- Copper or fiber network and audio communications
- Application and firmware downloading over the network or from a single point
- Network-wide control routing
- Form C alarm, supervisory, and trouble relay contacts

Refer to the release notes for the latest information regarding specifications and capabilities.

Minimum system requirements

NFPA 72 system classification	Required control equipment
Protected Premises (Local)	Cabinet with a CPU (Central Processor module), one LCD (Main LCD Display module) one 3-PPS/M Primary Power Supply and Monitor, appropriate batteries, plus appropriate initiating device circuits and notification appliance circuits
Auxiliary —or— Remote Station —or— Proprietary Protected Premises	Add a 3-OPS Off Premises Signal module or a correctly configured and programmed 3-MODCOM Modem Communicator module to the protected premises system

System construction

The EST3 system is assembled in layers as shown in Figure 1-1. The cabinet (1) houses all the system components. A variety of cabinets are available for as few as 5 and as many as 21 modules. A 3-RCC14 cabinet is illustrated in Figure 1-1.

Mounted directly to the cabinets are the rail chassis assemblies (2), of which there are three types: rail, audio, and audio with telephone. The most common chassis is the rail chassis, which provides mounting and electrical connections for the local rail modules (LRMs) (4). Mounted on the rear of the chassis are the cabinet power supplies (3).

The local rail modules (4) are the specialized cards that provide an interface between the CPU and the field wiring. The front of any rail module can support a control/display module (5), providing customized operator controls and annunciators.

Completing the EST3 “CAB” series cabinet assembly are the inner (6) and outer (7) doors. The “RCC” cabinets use a single outer door.

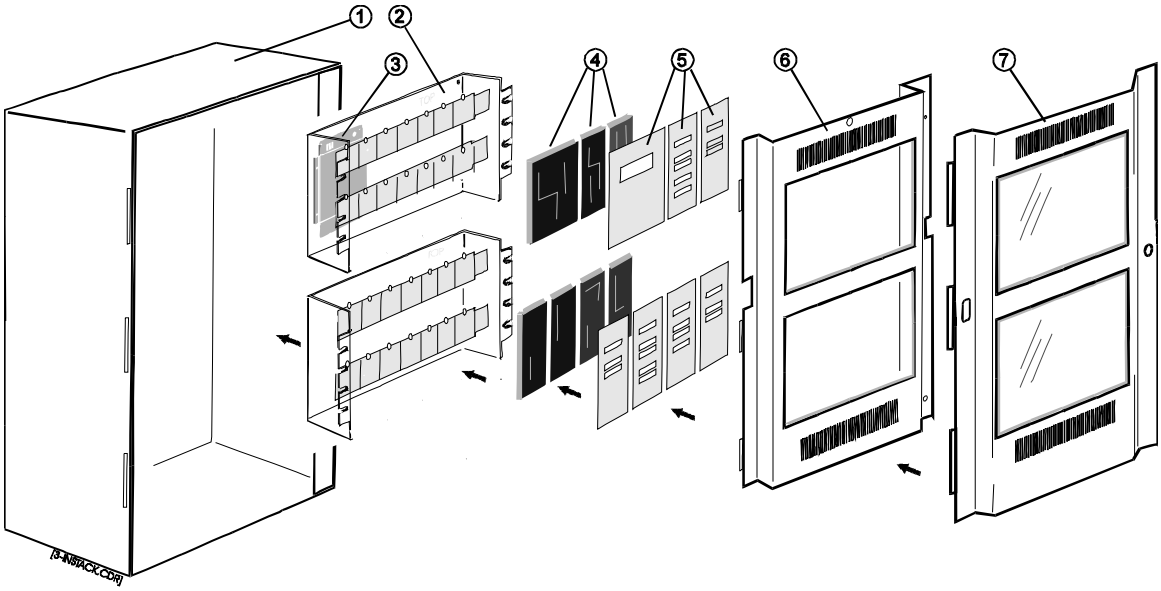

Figure 1-1: Exploded CAB series cabinet equipment installation

Audio subsystem description

The audio subsystem consists of a variety of signal sources, integral amplifiers, and sophisticated control software. The 3-ASU Audio Source Unit is available with the optional 3-FTCU Firefighter Telephone Control Unit as the model 3-ASU/FT. The ASU/FT is the only audio equipment required at the fire command control center. Zoned audio amplifiers are distributed throughout the system and provide the de-multiplexing, switching, amplification and circuit supervision.

Network audio riser wiring

A digital network audio riser consisting of a single pair (Class B) or two pairs (Class A) of wires connect all amplifiers together. Since the digital signals are multiplexed, any of 8 independent audio sources can be directed to any amplifier connected to the network. All command and control signals for the audio system are distributed over the network data riser.

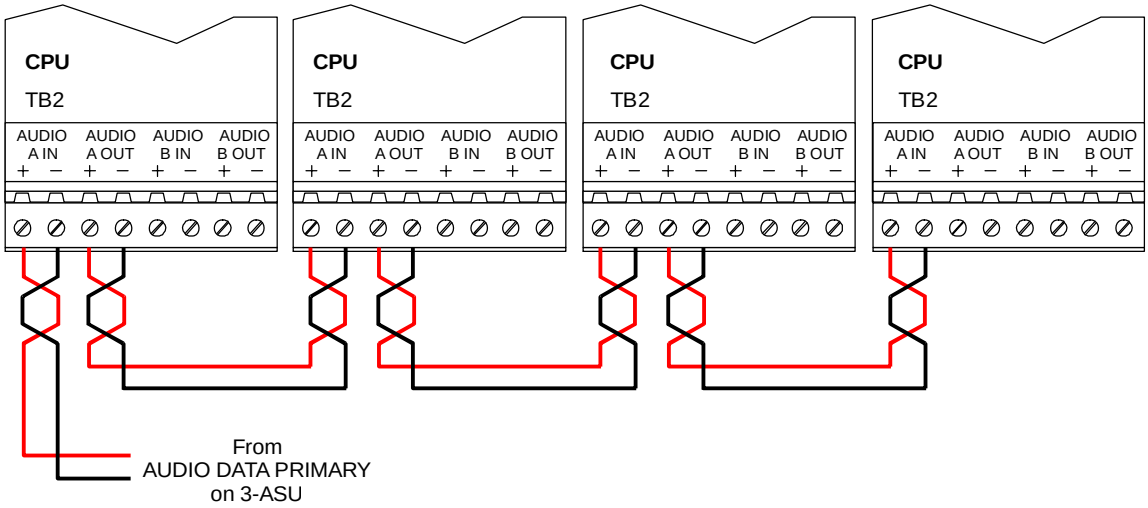

Figure 1-2: Class B network audio riser wiring

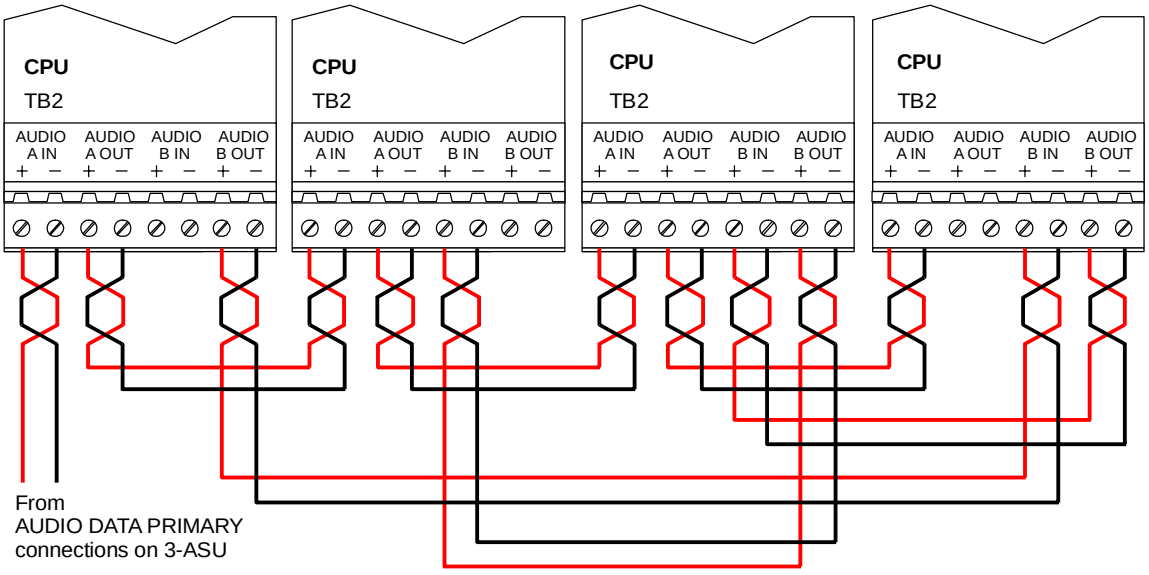

Figure 1-3: Class A network audio riser wiring

Amplifiers

Amplifiers are designed to feed a single audio zone and provide an integral 24 Vdc visual notification appliance circuit. Amplifier modules are available in 20-, 40-, and 95-watt versions, with each amplifier providing a single supervised Class B or A audio output circuit. The amplifier is configurable for either 25 Vrms or 70 Vrms output. An independent supervised Class B or Class A, 24 Vdc, 3.5 Amp notification appliance circuit (NAC) is also provided on the 20- and 40-watt amplifiers to drive notification appliances. In addition, automatic backup amplifiers can be added on a switched common backup configuration.

Each audio power amplifier has an integral demultiplexer, making the 8 audio channels available to the amplifier's input, as directed by the system programming. Each amplifier also contains circuitry that handles routine signal processing functions such as channel priority.

The amplifier's output is a dedicated, supervised, 25-, 70-Vrms speaker circuit, which covers one audio zone in the protected facility. Figure 1-4 is an example of an enclosure with four zone amplifiers and a backup amplifier. In response to an alarm, selected audio amplifiers have been connected to the required audio channels. Note that three different audio signals are being broadcast simultaneously.

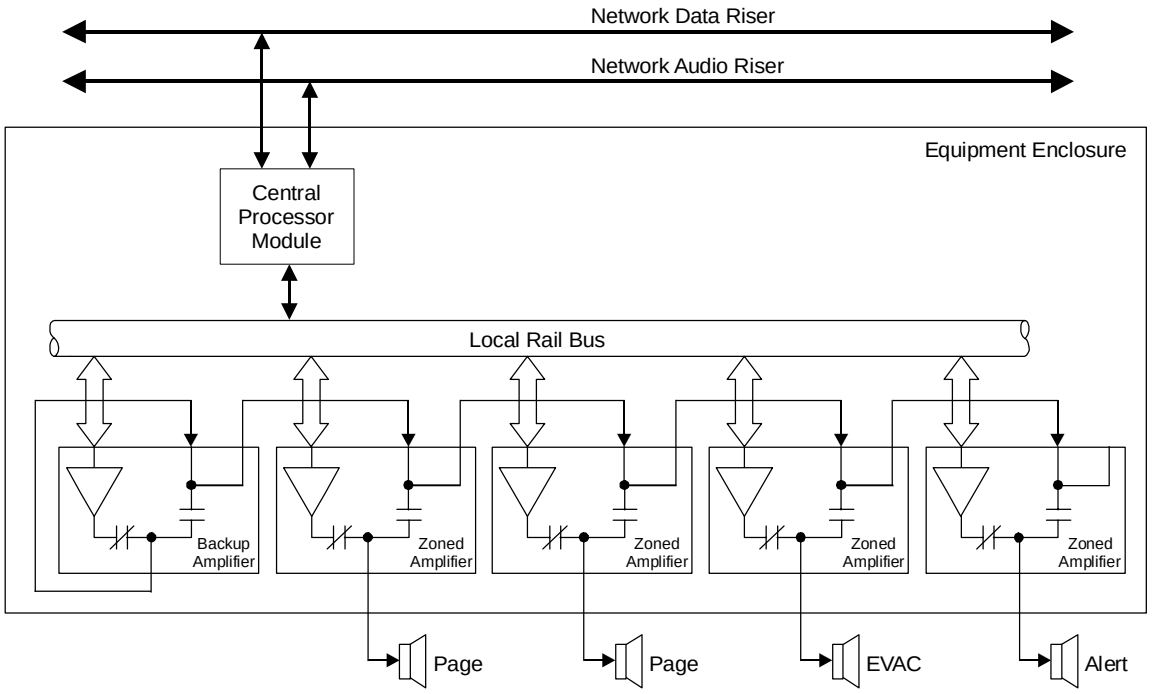

Figure 1-4: Normal amplifier operation

Possible fault condition	Amplifier operation
Amplifier loses communication with Central Processor module	If the panel is configured for stand-alone operation, the amplifier automatically switches to the EVAC channel and outputs its 1 kHz temporal tone when the panel detects an alarm. If the panel is not configured for stand-alone operation, the amplifier will not output any signal.
Panel loses communication with network data riser	Amplifier switches to the EVAC channel only in response to the local panel's programming uses the default EVAC message.
Panel loses communication with network audio riser	Amplifier switches to the EVAC channel in response to the system programming. For EVAC the amplifier uses its 1 kHz temporal tone. For Alert the amplifier uses its 1 kHz 20 bps tone.

Backup amplifiers

In the event of an amplifier failure (not a field wiring problem), the backup amplifier automatically replaces the failed amplifier, as shown in Figure 1-5.

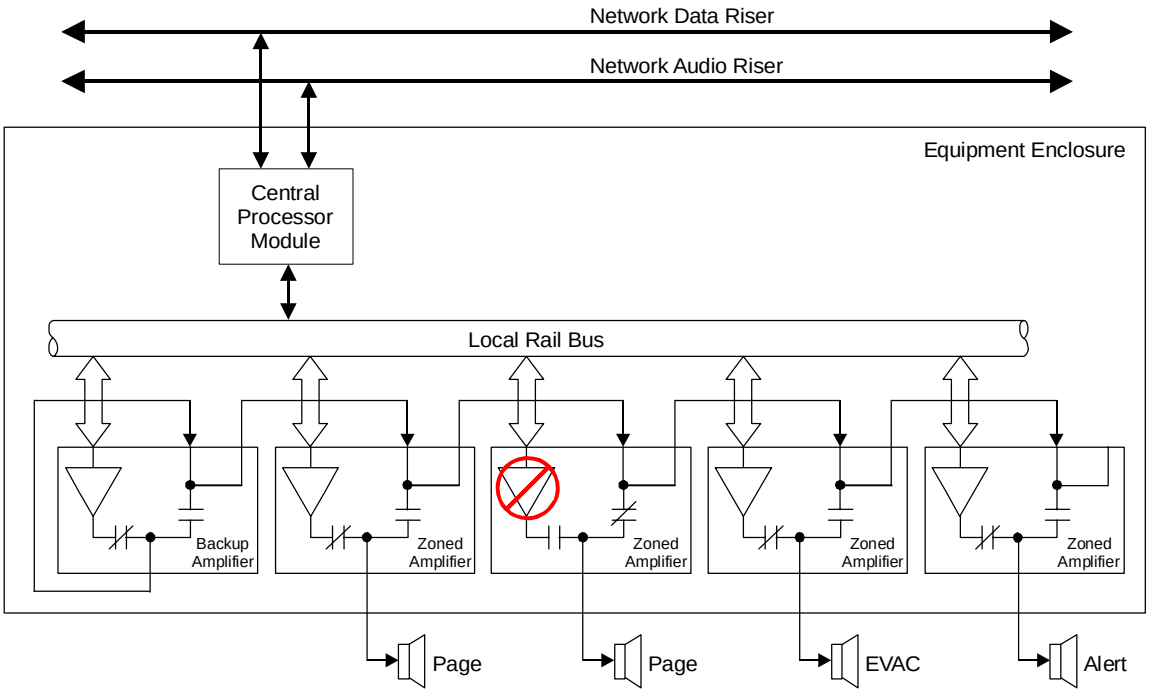

Figure 1-5: Single amplifier failure

Note: The backup amplifier will back up a failed amplifier if it was being used for Page, EVAC, or Alert. It will not back up an amplifier being used on an Auxiliary or General channel.

The amplifier failure caused the backup amplifier to automatically connect to the same audio source as the failed amplifier. The output of the backup amplifier replaced the output of the failed amplifier.

Note: The backup amplifier will not replace an amplifier that has detected a field wiring problem to prevent the amplifier from driving into a shorted circuit.

3-ASU Audio Source Unit

The 3-ASU is the source of the network audio riser. Available audio sources are local and remote voice PAGE functions and the firefighter telephone PAGE function. An integral tone generator database is provided for the EVAC, ALERT and other functions. Alternately, the 3-ASU's integral digital voice message playback unit can simultaneously provide up to 8 different prerecorded audio messages that may be assigned to any channel.

The multiplexer within the 3-ASU converts and compresses the real-time audio signal and converts it to a digital format. The output of the digital message playback unit and the integral tone generator database is already in the digital format. The 8 signal sources in digital format are then combined together as selected by the system designer using a multiplexer. This makes up the network audio riser signal.

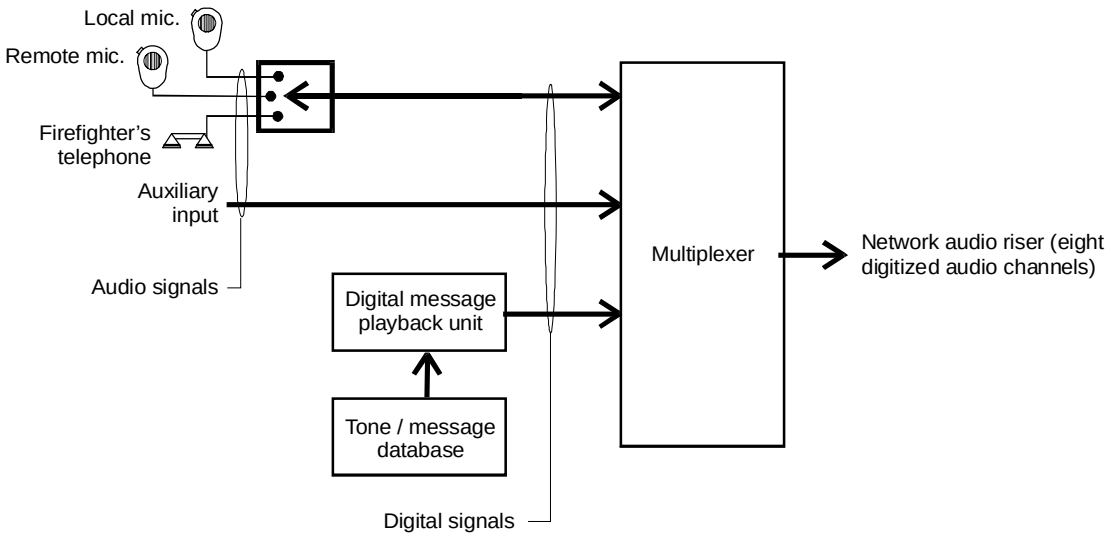

Figure 1-6: ASU Signal Flow

The amplifiers at the remote-panels extract the audio signals from the network riser, amplify it and send it to the speakers.

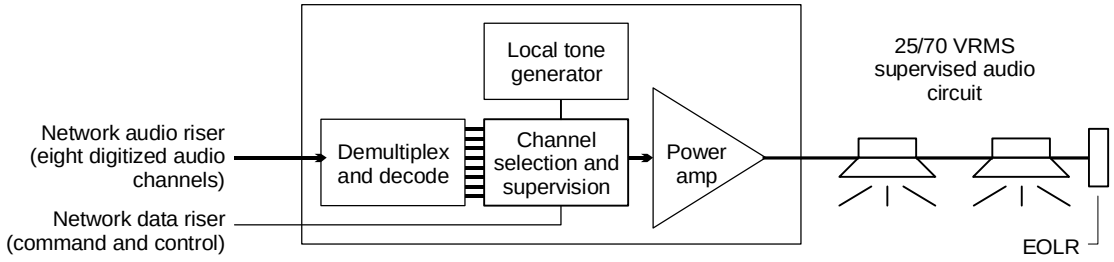

Figure 1-7: Amplifier Signal Flow

Audio signal priority

During system configuration, each of the eight available audio channels is assigned one of the five available attributes listed in Table 1-1. The Page, and Auxiliary attributes may only be assigned to a single channel. The General attribute may be assigned to up to four channels.

Table 1-1: Network audio channel parameters

Channel attribute	Priority
PAGE	1
EVAC	2
ALERT	3
AUXILIARY	4

Table 1-1: Network audio channel parameters

Channel attribute	Priority
GENERAL	5

Each channel attribute has a priority level associated with it. When more than one channel is commanded to source a given amplifier, the amplifier will connect to the source having the highest priority. The Page channel will only go active when the microphone push-to-talk switch is pressed.

Special audio source unit page modes

The front panel of the ASU offers four special page mode switches:

- All Call
- EVAC
- Alert
- All Call Minus

These switches provide instantaneous switching of the page signal to the most frequently contacted areas of the building. The special page modes do *not* require any source switching by the zoned audio amplifiers. When a special page mode switch is activated, the signal content of the eight outgoing audio channels is modified. Figure 1-8 illustrates this principle.

In the *normal page mode*, the eight audio signal sources are each connected to a separate audio channel, as represented by a ■ at the intersection of the signal source and the audio channel, shown at the lower left of Figure 1-8. Each audio channel is represented as a vertical line in this figure. The eight audio channels are actually multiplexed together and distributed over a common pair of wires called the network audio riser. The figure shows the system in the normal page mode, with the zoned audio amplifiers processing EVAC signals on the 1st and 3rd levels, a page signal on the 2nd level, and the alert signal on the 4th level.

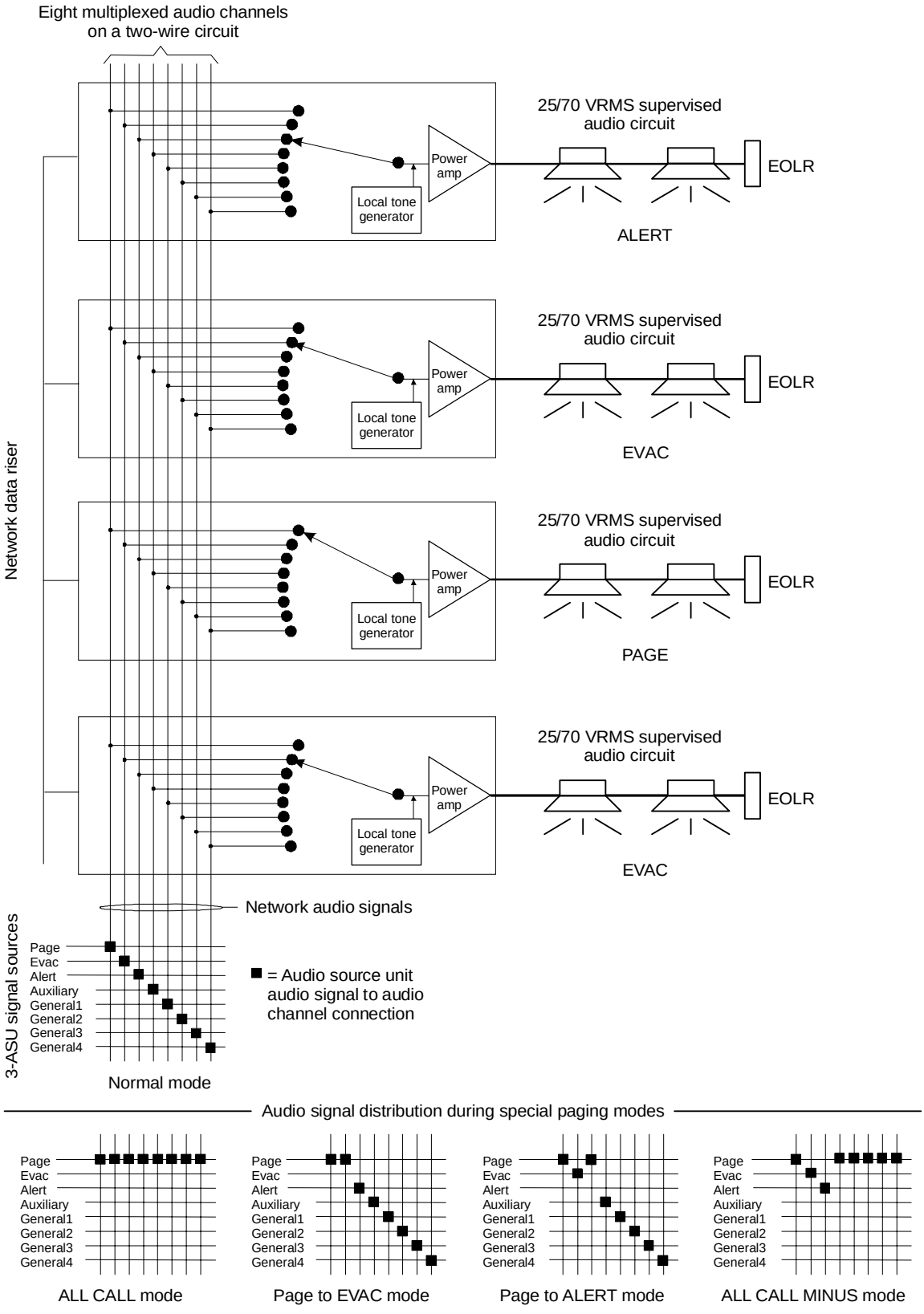

Figure 1-8: Audio Source Unit Special Page Mode Signal Flow

The *All Call* mode is used to send a page to the entire facility. When the All Call switch is activated, the Audio Source Unit is put into the all call mode. In this mode, the zoned audio amplifiers do not all transfer to the page channel. Rather, the Audio Source Unit redirects the page signal source to all the audio channels. Figure 1-8 shows the all call page source to audio channel connections in the lower left corner. Note that all channels receive the same signal. Any amplifier on the system, regardless of the audio channel selected, will receive the page. Any amplifiers that were previously idle will power up and receive the page.

The *Page to EVAC* mode is used to send a page to the areas automatically receiving the evacuation signal. Activating the EVAC switch causes the Audio Source Unit to enter the page to EVAC mode. In this mode, the zoned audio amplifiers connected to the EVAC channel do not transfer to the page channel. Rather, the Audio Source Unit redirects the page signal source to the EVAC channel. Figure 1-8 shows the page to EVAC mode page source to EVAC channel connections. The page and EVAC audio channels both receive the page signal. Any amplifier connected to either the page or EVAC audio channels will receive the page. The alert, auxiliary and general channels are connected to their respective signal sources, as in the normal mode.

The *Page to Alert* mode is used to send a page to the areas automatically receiving the alert signal. Activating the Alert switch causes the Audio Source Unit to enter the page to alert mode. In this mode, the zoned audio amplifiers connected to the alert channel do not transfer to the page channel. Rather, the Audio Source Unit redirects the page signal source to the alert channel. Figure 1-8 shows the page to alert mode page source to alert channel connections. The page and alert audio channels both receive the page signal. Any amplifier connected to either the page or alert audio channels will receive the page. Any amplifiers that were previously idle will power up and receive the page. The EVAC, auxiliary and general channels are connected to their respective signal sources, as in the normal mode.

The *All Call Minus* mode is used to send a page to all areas NOT automatically receiving the EVAC or alert signals. In high rise applications, all call minus is an effective way to quickly select stairwells. Activating the All Call Minus switch causes the Audio Source Unit to enter the all call minus mode. In this mode, the zoned audio amplifiers connected to the auxiliary and general channels do not transfer to the page channel. Rather, the Audio Source Unit redirects the page signal source to the auxiliary and four general channels. Figure 1-8 shows the all call minus mode page source to auxiliary and general channel connections. The

page, auxiliary and four general audio channels all receive the page signal. Any amplifier connected to the page, auxiliary or general audio channels will receive the page. The EVAC and alert channels are connected to their respective signal sources, as in the normal mode.

Automatic messaging

One of the features of the 3-ASU Audio Source Unit is the method used to monitor the integrity of the digital audio system. When an audio messaging system is configured, default audio messages are recorded for the Evacuation and Alert channels. The text of default messages should be generic in nature, and should not include location-specific instructions. When the system is in the normal condition, the 3-ASU continuously transmits default messages over the network audio riser. The zone amplifiers use the default messages to verify their operational integrity, as well as the integrity of the riser wiring.

When an alarm is detected, the evacuation and alert message channels are selected by the amplifiers in the appropriate areas in the facility, as directed by the system rules. If a specific evacuation message has been programmed to play in response to the alarm, it is sent out over the evacuation channel. Location specific evacuation messages contain information and instructions that should only be used for a specific alarm location. Should a second alarm from another location be received, the evacuation message playing as a result of the first alarm may not be appropriate for the second alarm.

Note: In the event of conflicting messaging instructions caused by multiple alarm events, the system will play the default evacuation message, whenever two or more different messages are requested at the same time on the evacuation channel.

Automatic message processing is illustrated in Figure 1-9. By reverting back to the generic default evacuation message in multiple alarm location scenarios, no one can be misdirected by the wrong message. Default messages also play during alarms when no location specific message has been requested.

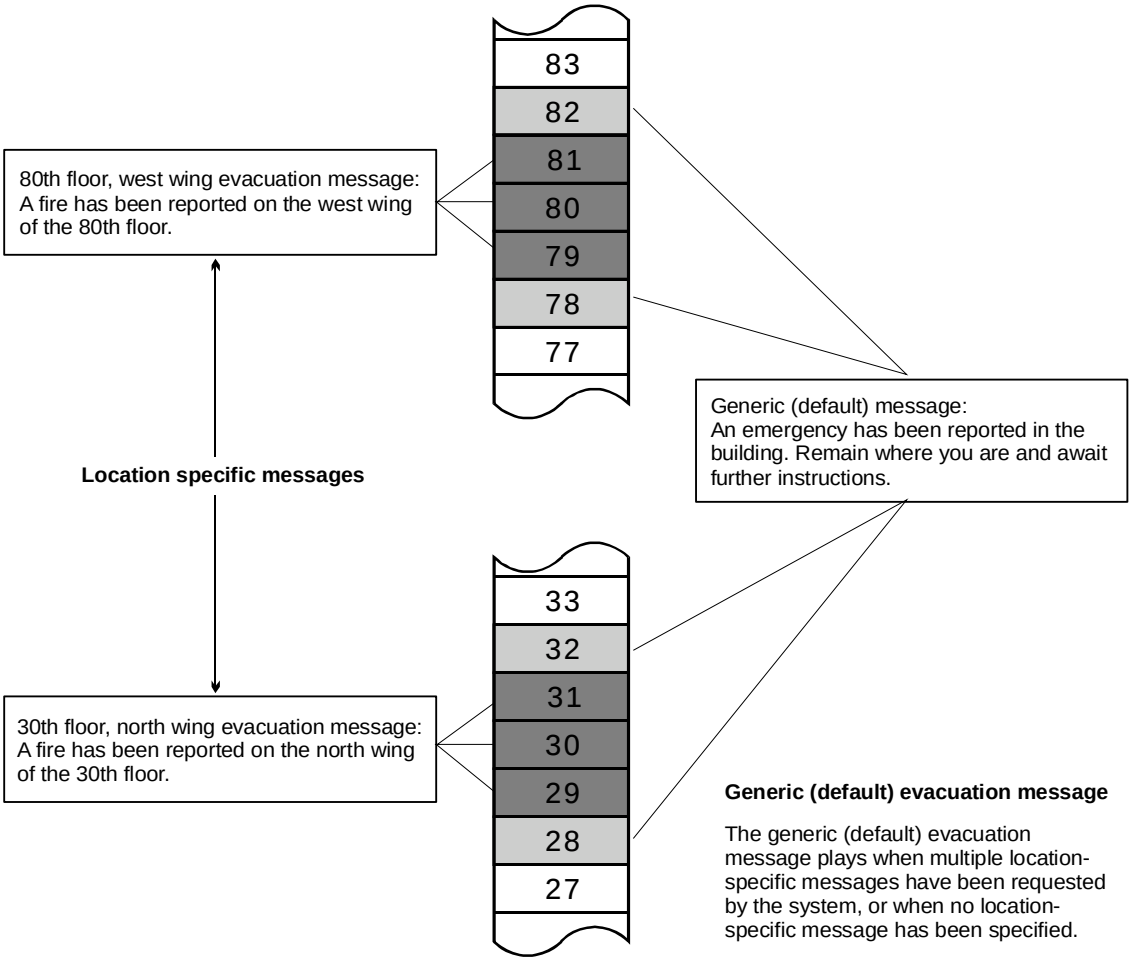

Figure 1-9: Automatic Message Processing

Firefighter phone

The 3-FTCU contains a master telephone handset that provides an analog telephone riser for totally independent 2-way communications between the fire command station and Firefighter telephone stations / jack telephones installed at strategic locations throughout the protected facility.

Taking a telephone off-hook or plugging into a telephone jack generates a visual and audible incoming call signal at the fire command station. The individual originating the call hears a tone until the handset is connected to the system. The fire command station operator manually connects the incoming phone call to the phone riser to complete the call. Up to five remote telephones may be connected to the riser simultaneously. The fire command center operator can also use the telephone circuit as a page source, permitting paging via the telephone system.

Digital network subsystem

Network data riser wiring

The network data riser provides the communication path between each CPU module (3-CPUx or 3-ANNCPUx) installed in the system. Each CPU module has two bi-directional RS-485 ports (Network A and Network B) that are used to connect the network data riser wiring. Network B is isolated from ground and Network A is not.

The correct method for running the network data riser is to connect the isolated Network B port on one CPU module to the non-isolated Network A port on another. Any remote CPU modules connected to a local CPU module's Network B port is considered to be *downstream* from the local CPU module. Any remote CPU modules connected to a local CPU module's Network A port is considered *upstream* from the local CPU module.

Additionally, *next* and *previous* refer to the order in which remote CPU modules are electrically connected to a local CPU module. *Previous* refers to the remote CPU module whose isolated Network B port connects to the local CPU module's non-isolated Network A port. *Next* refers to the remote CPU module whose non-isolated Network A port connects to the local CPU module's isolated Network B port.

Note: Since the data traveling the network data riser is bi-directional, *out* and *in* references are used to direct wire connections.

Class B network data risers

In a Class B network, a break or short in the network data riser wiring divides the network into separate independent networks. Panels on the same side of the line fault will communicate with each other but not with panels across the line fault. Figure 1-10 shows the wiring for a Class B network.

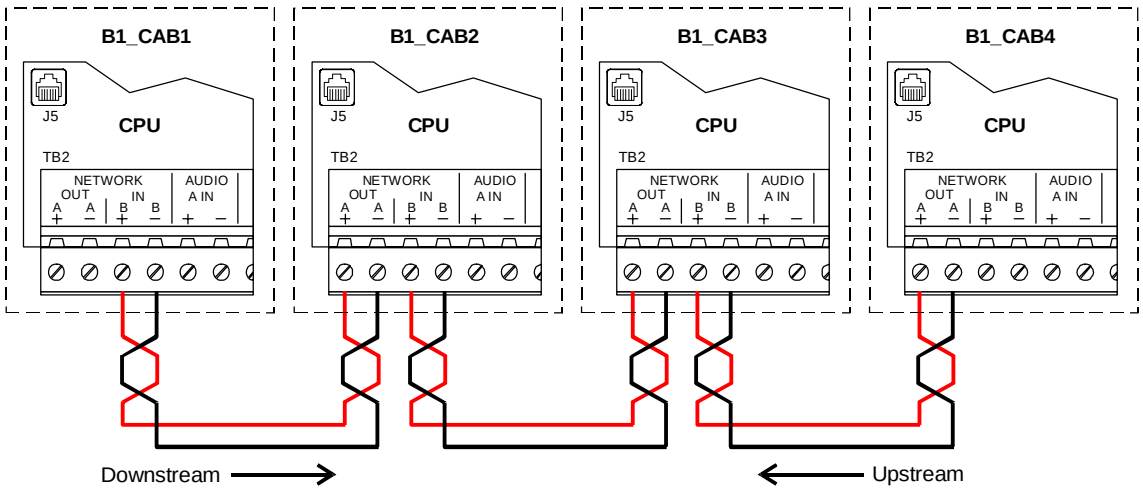

Figure 1-10: Class B network data riser wiring using copper wire

Note: As a matter of convention, a Class B network data riser should start at the CPU module that does not have wires connected to its Network A port.

When wiring a Class B network, give careful consideration as to the location of the service panel. The service panel provides a single point from which you can download files to all other panels on the network. For this function to work properly you must use the panel at the start of the network data riser as the service panel. See “Downloading data files” for more information.

Class A network data risers

In a Class A network, a single break or short in the network data riser wiring does not interrupt communications between panels. Figure 1-11 shows the wiring for a Class A network.

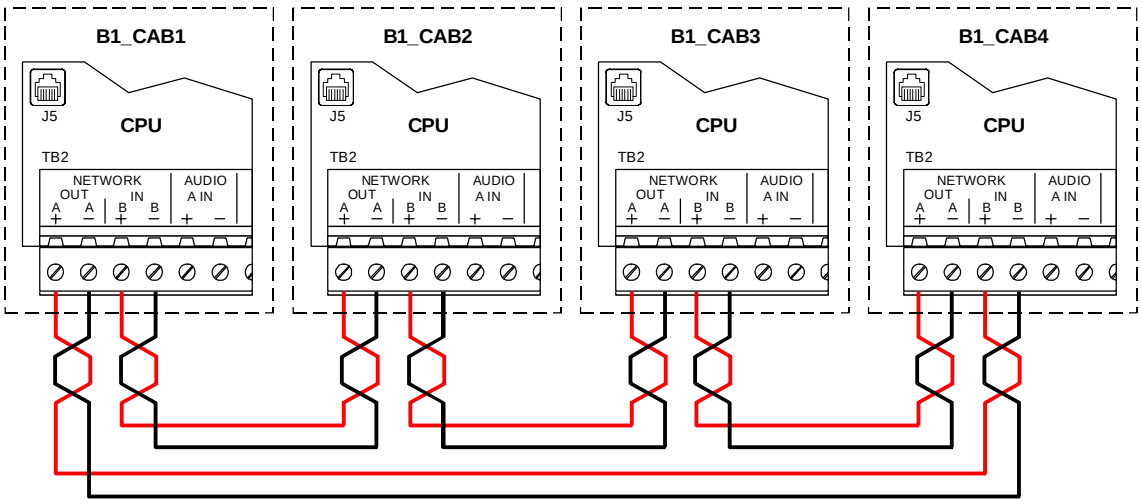

Figure 1-11: Typical Class A network data riser wiring using copper wire

Download connections

Each programmable rail module has a modular phone jack to use for downloading data directly from the SDU computer. The modular phone jack on any CPU module can also be used to download data to other programmable rail modules in the same panel over the rail bus, or to other panels over the network data riser.

In addition to the modular phone jack, the CPU module has two serial communication ports that can be used to download data, provided both of these conditions are met:

- A 3-RS232 option card is installed
- The serial port used to download data is not configured for gateway or coder applications

Tip: To download data over the network without having to reconfigure the system, temporarily install a 3-RS232 option card on any CPU module in the system and connect the SDU computer to serial port 1.

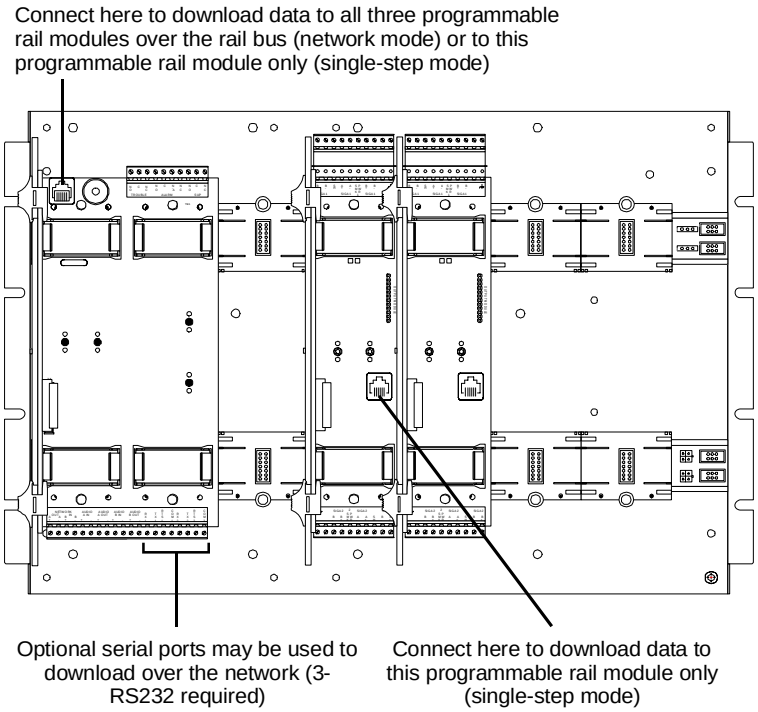

Figure 1-12: Potential connection points for downloading data

Downloading database files over the network

A CPU module's Network A port and its modular phone jack share an interrupt with the module's microprocessor. As such, the microprocessor disables the Network A port whenever you connect the SDU computer to the modular phone jack. Consequently, download options differ for Class A and Class B networks.

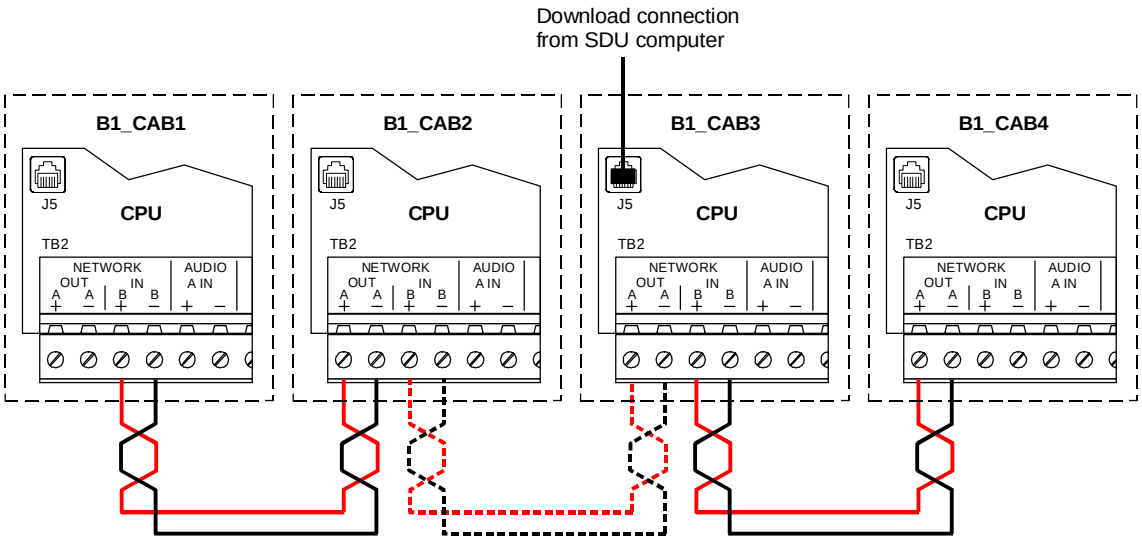

Figure 1-13: Impact of disabling Network A terminal connection on Class B networks during a download

Figure 1-13 shows how connecting the SDU computer to the modular phone jack affects downloading data over a Class B network. Connecting the SDU computer to the modular phone jack on the CPU module installed in panel B1_CAB3, disables that CPU module's Network A port. Downloading data to panels B1_CAB2 and B1_CAB1 from panel B1_CAB3 is no longer possible but downloading to B1_CAB4 still is.

Since the microprocessor disables only the Network A port, the CPU module that doesn't have a Network A port connection should be used as the service panel. It is the only panel that is capable of downloading to every panel on the network using the modular phone jack.

Note: Connecting the SDU computer to an optional serial communications port does not affect the Network A port. If a 3-RS232 option card is connected to the CPU, you can download data to any panel on a Class B network regardless of where the panel physically connects to the network data riser.

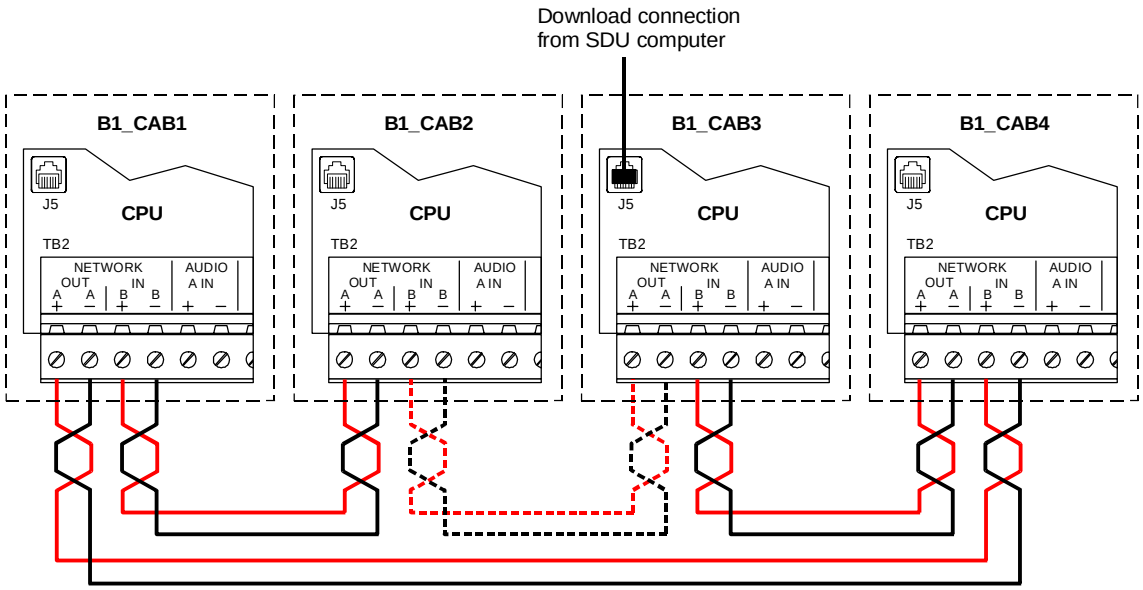

Figure 1-14: Impact of disabling Network A terminal connection on Class A networks during a download

On Class A networks however, see Figure 1-14, disabling the Network A port on panel B1_CAB3 does not prevent the other panels from receiving data through B1_CAB3's Network B port. Connecting the SDU computer to the modular phone jack does cause the panel to report a Network Class A Failure trouble. When the network data riser is configured for Class B, connecting to the panel modular phone jack causes the local CPU module to report a communications fault with every panel upstream of the local CPU module.

Tip: To download data to every panel across the Class B network data riser, connect to the first connection on the network data riser as the download panel — the panel with no connections on its Network A terminals.)

Foreign language support

Printer use with foreign languages

When supporting a single-byte character set language, your printer must be able to support the appropriate DOS code page. To support a double-byte character set language, your printer must be able to support the appropriate Windows code page. The required code pages are listed below.

Remember that not all Windows characters are available on DOS printers, so some characters are not supported on these printers.

Language	Code page
Chinese simplified	Windows Page Code 936 (GB)
Chinese traditional	Windows Code Page 950 (Big 5)
Korean	Windows Code Page 949 (Extended Wansung)
Hebrew	DOS Code Page 862
Turkish	DOS Code Page 857
Dutch, French, Italian, Portuguese, Spanish, English	DOS Code Page 850
Polish, Slovak	DOS Code Page 852
Russian	DOS Code Page 866

Bilingual language support

EST3 display modules (all LCD models and the KPDISP) feature bilingual operation. For two languages to be supported simultaneously, they must appear on the same code page. Refer to the table below to determine the system bilingual capabilities. Bilingual operation is not supported for Chinese and Korean.

Windows code page	Languages supported
1250 (Eastern Europe)	English, Polish Slovak
1251 (Cyrillic)	English, Russian
1252 (Western Europe)	Dutch, English, French, Italian, Portuguese, Spanish
1254 (Turkish)	English, Turkish
1255 (Hebrew)	English, Hebrew

Example: Bilingual operation between Polish and Slovak is supported (code page 1250). Bilingual operation between Polish and Russian is not supported, as no code page has both.

Display device language support

LCD language support

Language	Marketplace				
	US	European	Asian	Canadian	Mideast
Chinese, traditional (Taiwan)			X		
Chinese, simplified (PRC)			X		
Dutch		X			
English (UK)		X			
English (US)	X	X	X[1]	X	X
French Canadian	X			X	
Hebrew	X			X	X
Italian	X	X		X	
Korean, Extended Wansung			X		
Polish		X			
Portuguese (Brazil)	X			X	
Russian	X	X		X	
Slovak		X			
Spanish (South America)	X			X	
Turkish	X			X	

[1] For testing and support purposes only

3-FTCU language support

Language	Marketplace				
	US	European	Asian	Canadian	Mideast
Chinese, traditional (Taiwan)			[1]		
Chinese, simplified (PRC)			[1]		
Dutch		X			
English (UK)		X			
English (US)	X	X	X	X	X
French Canadian	X			X	
Hebrew	X			[1]	[1]
Italian	X	X		X	
Korean, Extended Wansung			[1]		
Portuguese (Brazil)	X			X	
Spanish (South America)	X			X	
Turkish	[1]			[1]	
Russian	[1]	[1]		[1]	
Polish		[1]			
Slovak		[1]			

[1] Only Western European character set is supported

KPDISP language support

Language	Marketplace				
	US	European	Asian	Canadian	Mideast
Chinese, traditional (Taiwan)					
Chinese, simplified (PRC)					
Dutch		X			
English (UK)		X			
English (US)	X	X		X	X
French Canadian	X			X	
Hebrew	X			X	X
Italian	X	X		X	
Korean, Extended Wansung					
Polish		X			
Portuguese (Brazil)	X			X	
Russian	X	X		X	
Slovak		X			
Spanish (South America)	X			X	
Turkish	X	X		X	

Signature series devices

The Signature series family consists of intelligent smoke and heat detectors, carbon monoxide (CO) sensor detectors, bases, input/output modules, and ancillary devices. The EST3 network supports Signature series devices using several models of the Signature Driver Controller module. Up to 125 detectors and 125 modules can be connected to the Signature Data Circuit on these modules.

The Signature series smoke, heat and CO sensor detectors contain their own microprocessors. This allows the devices to make alarm decisions based on the information gathered by the sensing elements incorporated in the device. Signature series detectors can be installed in any of four detector bases:

- The Standard Base provides wiring terminals for connection to a remote LED.
- The Relay Base provides a detector activated, pilot-duty dry contact relay used to control external appliances.
- The Sounder Base incorporates a sounder horn that can be controlled by the detector, by a special Signature module, by the control panel, or by programmed rules. The CO compatible sounder base is specifically designed for use with CO sensors and requires a temporal pattern generator (TCDR) to add the audible output function to any Signature Series detector. This CO sounder base is not compatible with a coded system.
- The Isolator Base protects the Signature Data Circuit from wiring shorts.

Signature modules interface and support the operation of initiating devices, conventional 2-wire smoke and heat detectors, manual pull-stations, strobes, bells, etc. The actual functions of each Signature module is determined by a personality code downloaded to the module through the System Definition Utility (SDU) program.

Signature series manual pull-stations (1-stage and 2-stage) feature an integral Signature module that monitors the station. One-stage stations are monitored by a single input module that sends an alarm signal to the loop controller when the station is activated. Two-stage stations are monitored by a dual input module which sends two independent alarm events to the control panel; one when the pull-switch is activated, and the second when the key switch is activated.

Alarm sensitivity setting

Alarm sensitivity refers to the primary threshold (expressed in percent smoke obscuration) at which the smoke detector will go

into alarm. The alarm sensitivity setting for smoke detectors can be set to one of five sensitivity levels. When smoke detectors having both ionization and photoelectric elements are used, the sensitivity setting applies to both elements. Reduced sensitivity settings are used to reduce the occurrence of nuisance alarms. The alarm sensitivity setting may be individually set for each detector using the SDU program.

Alternate alarm sensitivity setting

Alternate alarm sensitivity refers to the secondary threshold (expressed in percent smoke obscuration) at which the smoke detector goes into alarm. The alternate alarm sensitivity setting for smoke detectors can be set to one of the same five sensitivity levels as the primary alarm. When smoke detectors having both ionization and photoelectric elements are used, the sensitivity setting applies to both elements. This feature permits increasing or reducing an individual detector's sensitivity at various times of the day, dependent upon, environmental conditions, occupancy, manufacturing processes, etc. Increased sensitivity is typically used when a facility is unoccupied. Reduced sensitivity is typically used to reduce the occurrence of nuisance alarms when occupancy or environmental conditions may create prealarm conditions. An alternate alarm sensitivity setting for each detector can be set using the SDU program.

Alarm verification

Upon receipt of the initial alarm signal from a verified detector, the EST3 panel issues a detector reset command. After a programmable reset/retard period, if the detector continues to generate an alarm during the fixed confirmation period, the alarm is considered valid and processed by the EST3 control panel. Alarm verification reduces the occurrence of nuisance alarms, as it provides a time frame in which the cause of the alarm can be investigated to determine whether an actual alarm condition exists. The alarm verification period can be increased or decreased through the SDU program, as limited by the listing agencies.

Alternate alarm verification

The alternate alarm verification feature operates the same way the alarm verification feature operates using a second, alternate, programmed reset/retard period.

Prealarm setting

Signature smoke detectors can be configured to enter a prealarm state, which generates a monitor event message. Detectors configured for prealarm have a prealarm pseudo point for which rules can be written.

During configuration, you specify a percentage of the alarm sensitivity setting that will generate a prealarm event.

Alternate prealarm setting

The alternate prealarm setting is similar to the prealarm setting, but it represents a percentage of the alternate alarm sensitivity that will generate a prealarm event.

Network applications

This section deals with the initial layout of the network cabinets as well as application configurations for the basic network modules.

Network layout

The first task for the system designer is locating the equipment cabinets throughout the project. The objective when locating cabinets is to maximize the per cabinet coverage of the facility while minimizing hardware cost. The following general information should be used as a guide to designing the system.

The per cabinet coverage is, in some part, based upon the type of project being designed. In a high rise building installation that requires an audio emergency voice communication system, the problem becomes how many floors can be served by a single cabinet. In a campus style installation, there may be one or more cabinets per building, depending on building size.

Cabinet coverage

The following factors govern how much area a single cabinet can cover:

Cabinet capacity: Depending on the installed equipment, the largest backbox available can have 21 module spaces and 3 chassis spaces. Is this enough cabinet capacity to house the equipment required to cover the proposed area?

Available current per cabinet: Does the proposed number of large current components (audio amplifiers and 24 Vdc notification appliance circuits), in addition to the required module currents, exceed the available 28 amps per cabinet or 60-Ah battery capacity?

Notification Appliance Circuit voltage drop: Does the distance from the cabinet to the last strobe, horn, speaker, etc. exceed the acceptable limits?

User interface requirements: Depending on the installed equipment, the largest backbox available can have 19 module displays installed. Will this provide enough capacity for the required control/display module functions?

Distance between cabinets: Does the wiring length between any three cabinets exceed 5,000 ft. (1,524 m)?

System capacity of 64 cabinets per network: Does the proposed system require more than 64 cabinets?

Cost of installation labor and materials: Is it cheaper to install a smaller cabinet and service the floor above and below the floor

of installation, or install a larger cabinet with more equipment, and wire two floors above and two floors below the cabinet floor?

Feature/function domain

The EST3 life safety system utilizes peer-to-peer networking technology. No single cabinet is in control of the network. Peer-to-peer networking permits multiple control locations within a single network. The feature/function domain is defined as the group of cabinets that are affected when the feature or function is activated. A network cabinet may be a part of one or more groups. Multiple control locations are permitted for any group.

Three types of domains are available.

Local: The feature/function affects only the cabinet on which the LCD module is installed.

Group: The feature/function affects a predefined group of cabinets on the network.

Global: The feature/function affects all the cabinets on the network.

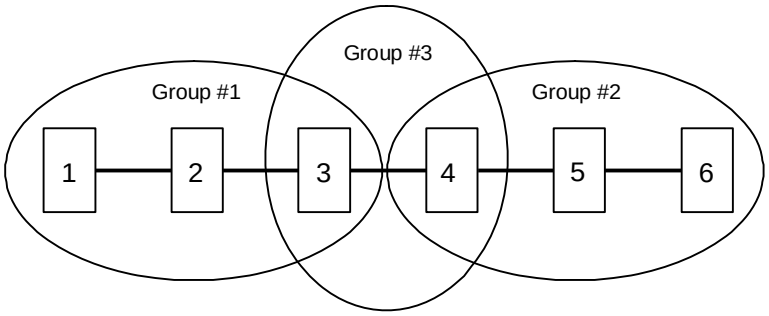

Figure 1-15: Sample domain consisting of three groups

Using the System Definition Utility (SDU), you can configure the system so that information from any cabinet can be selectively sent to any combination of other cabinets on the network.

Each cabinet may selectively transmit the following information to other cabinets on the network:

- Reset commands
- Alarm Silence commands
- Trouble Silence commands
- Drill commands
- Acknowledge commands

A cabinet can also be configured to receive state changes (Alarm, Supervisory, Trouble, Monitor, firefighter telephone incoming calls), logicals, events, audio controls, and so forth, from a select group of cabinets.

Feature/function domains are associated with the cabinet providing the operator controls. In Figure 1-15, the feature/function domain for Cabinet 1, which has the operator controls for the first subnet, is groups 1 and 3. The feature/function domain for Cabinet 6, which has the operator controls for the second subnet is groups 2 and 3.

Two subnetworks, with operator controls at cabinets 1 and 6.
Cabinets 3 and 4 are common to both subnetworks.

Sending cabinet		Commands					
		Cabinet state	Reset	Alarm silence	Trouble silence	Drill	Acknowledge
Group 1	Cabinet 1	1, 2, 3, 4	1, 2, 3, 4	1, 2, 3, 4	1, 2, 3, 4	1, 2, 3, 4, 5, 6	1, 2, 3, 4
	Cabinet 2	1, 2, 3, 4	N/A	N/A	N/A	N/A	N/A
Group 3	Cabinet 3	1, 2, 3, 4, 5, 6	N/A	N/A	N/A	N/A	N/A
	Cabinet 4	1, 2, 3, 4, 5, 6	N/A	N/A	N/A	N/A	N/A
Group 2	Cabinet 5	3, 4, 5, 6	N/A	N/A	N/A	N/A	N/A
	Cabinet 6	3, 4, 5, 6	3, 4, 5, 6	3, 4, 5, 6	3, 4, 5, 6	1, 2, 3, 4, 5, 6	3, 4, 5, 6

Legend
1 through 6 = Cabinets that receive commands from the sending cabinet
N/A = Not applicable

Figure 1-16: Routed network commands for the domain illustrated in Figure 1-15

In Figure 1-16, the Cabinet 1 entry under the Cabinet State column indicates that Cabinet 1 should receive from cabinets 1, 2, 3, and 4 all information about changes of state. Because Cabinet 1 is the location of the operator controls it should send information about reset, alarm silence, trouble silence, drill, and acknowledgments to all the cabinets in the domain, which are cabinets 1, 2, 3, and 4. In this example, the drill command is common to both systems. Note, that the drill command is also sent to cabinets 5 and 6 by Cabinet 1.

The Cabinet 2 entry under the Cabinet State column indicates that Cabinet 2 receives its change of state information from cabinets 1, 2, 3, and 4. Because there are no operator controls located at cabinet 2, there is no need to send reset, alarm silence, trouble silence, drill, and acknowledgment information to other cabinets. As an alternative, the table could show these commands sent to other cabinets, because they can never be issued due to the lack of an LCD module in the cabinet.

Cabinets 3 and 4 receive their change of state information from all cabinets on the network, as indicated in the cabinet state column. This is necessary as cabinets 3 and 4 are part of both domains. Again, there is no need to send reset, alarm silence, trouble silence, drill, and acknowledgment information to other cabinets from cabinets 3 and 4.

The Cabinet 5 entry under the Cabinet State column indicates that Cabinet 5 receives its change of state information from cabinets 3, 4, 5, and 6.

Cabinet 6 information indicates that Cabinet 6 should receive from cabinets 3, 4, 5, and 6 all information about changes of state. Because cabinet 6 is the location of the operator controls it should send information about reset, alarm silence, trouble silence, drill, and acknowledgments to cabinets 3, 4, 5, and 6, (all the cabinets in the domain.) In this example, the drill command is common to both systems. Note, that the drill command is also sent to cabinets 1 and 2 by Cabinet 6.

Audio applications

Amplifier selection

The EST3 system provides amplifiers with 20-, 40-, and 95-watt output ratings to meet any project requirement. Selection of the proper amplifiers requires an understanding of the amplifier characteristics and application related information that follows.

Audio zoning

The output of each amplifier usually covers a single audio zone, typically a floor of a high rise building. Using the appropriate Signature modules, the amplifier's output can be divided into several zones. The output circuit can be configured for either Class A or Class B wiring.

Output wattage

The output rating of an amplifier is determined by the speaker load it is required to drive, and any expansion or safety factor required. The speaker load is determined by adding up the value of all the wattage taps selected on each speaker connected to the amplifier. For a conservative approach, use the highest wattage tap available on each speaker. This insures there is enough head room to adjust speaker taps to compensate for any installation variables such as sound absorbing furniture, etc.

Output voltage

Zoned amplifiers are available with either a 25 Vrms or 70 Vrms output. The 25 Vrms output amplifiers are primarily used in retrofit applications that previously had 25 Vrms speakers installed. 70 Vrms output amplifiers are recommended for new installations. The output circuits of a 70 Vrms amplifier can be run eight-times farther than a 25 Vrms amplifier, given the same load.

Note: If all the system wiring is required to be power limited, you may use any 20-, 40-, or 95-watt amplifier with either a 25 Vrms or 70 Vrms output.

Wiring considerations

Refer to Appendix B of this manual for wire distance calculations and other wiring considerations.

Backup amplifiers

Each cabinet can contain 1 zoned amplifier module to use to back up the remaining primary zoned amplifier modules installed in the same cabinet with the following restrictions:

- All the amplifiers must have the same output voltage rating.
- If the cabinet contains older amplifier modules (15- and 30-watt) and newer amplifier modules (20- and 40-watt), the amplifier used to back up the primary amplifier modules must be of the older type.

Note: In cases where older and newer zoned amplifiers exist in the same cabinet, the older modules should be replaced with newer modules for optimum results.

- The backup amplifier must have an output wattage rating equal to or greater than the largest primary amplifier it is backing up. If not, the output capacity of the speaker circuit is diminished proportionately.
- The wire used to wire the backup amplifier to the other amplifiers must be the same size or greater than that used to wire the speaker circuit.

Cabinet space

The 20- and 40-watt amplifiers each require one space on the rail assembly. The 95-watt amplifier requires two rail spaces.

The number of zoned amplifier modules that can be installed in a single cabinet is limited by the number of available rail spaces, the number of power supplies installed in the cabinet, and battery limits, if any.

Audio channels

The EST3 audio system provides eight (8) simultaneous channels for distribution of audio signals. The functions of four of these channels are fixed by the system. These four channels are referred to by their functions: *Page*, *EVAC*, *Alert*, and *Auxiliary Input* channels. The four remaining channels are referred to as general channels 1 to 4.

Under manual or automatic network control, each amplifier's input can be connected to either the Alert channel, the Evacuation (EVAC) channel, the Page channel, the Auxiliary Input channel, or one of four (4) general input channels. Should conflicting commands be issued to a single amplifier, the amplifier responds to the channel with the highest priority. The eight channels are prioritized as follows, with the Page channel having the highest priority

Page channel

Paging is a manual function. An operator is required to select a destination for the page, and then make an announcement. The Page channel is never automatically selected by the EST3 system.

The page channel always carries a live page signal, regardless of its source. There are three sources which can supply the paging signal: 1) the local 3-ASU microphone, 2) the remote microphone, and the 3) the firefighter telephone system. These sources are automatically prioritized as shown in Table 1-2.

Table 1-2: Page priorities

Priority	Page signal source
1 (highest)	Local microphone
2	Firefighter phone
3 (lowest)	Remote microphone

The page command is a non-latching function. When the page command ends, amplifiers automatically switch back to the source channel that was active (if any) prior to the page command.

Five types of page commands are available on the network. The first four page commands are available simply by pressing a single switch on the front of the 3-ASU. These are the paging functions most commonly used in an emergency situation.

1. The All Call command temporarily transfers all amplifiers to the Page channel while the page is active. All Call distributes the page signal to every amplifier in the system.
2. The Page to EVAC command temporarily transfers the Page signal to all amplifiers actively connected to the EVAC channel. All “EVAC” amplifiers then receive and distribute the Page signal.
3. The Page to Alert command temporarily transfers the Page signal to all amplifiers actively connected to the Alert channel. All Alert amplifiers then receive and distribute the page signal.
4. The All Call Minus command temporarily transfers the page signal to all amplifiers except those connected to the EVAC and Alert channels.
5. A Selective Page temporarily transfers the selected amplifiers to the Page channel while the page is activate, distributing the page signal only to selected audio zones

(amplifiers). Audio zones are selected manually by the operator using the LED/Switch displays.

An example of how the page commands work is illustrated in Figure 1-17. This figure shows a nine story high rise building, with a fire on the 6th floor. The fire plan requires the evacuation signal to be sounded on the fire floor, floor above the fire, and floor below the fire. The alert signal is required to sounded in all other areas of the building except the stairwells. The first column (Fire Alarm) shows the automatic responses on the affected floors according to the fire plan.

Floor	Fire Alarm	ASU page commands				
		Page to Evac	Page to Alert	All Call Minus	All Call	Zoned Paging
Stairwells				*Page*	*Page*	
9th floor	Alert	Alert	*Page*	Alert	*Page*	Alert
8th floor	Alert	Alert	*Page*	Alert	*Page*	Alert
7th floor	Evac	*Page*	Evac	Evac	*Page*	Evac
6th floor	Evac	*Page*	Evac	Evac	*Page*	*Page*
5th floor	Evac	*Page*	Evac	Evac	*Page*	Evac
4th floor	Alert	Alert	*Page*	Alert	*Page*	Alert
3rd floor	Alert	Alert	*Page*	Alert	*Page*	Alert
2nd floor	Alert	Alert	*Page*	Alert	*Page*	Alert
1st floor	Alert	Alert	*Page*	Alert	*Page*	Alert

Legend
Fire floor
Floor above or floor below fire

Figure 1-17: ASU Page Command Example

The Page to EVAC command replaces the EVAC signal with the Page signal, as shown in the figure's second column.

The third column shows the Page to Alert command response, all the Alert signals have been replaced by the Page signal.

The All Call Minus command directs the Page to the areas which are not receiving the EVAC or Alert signals, i.e. the stairwells. In the fourth column of Figure 1-17, the stairwells receive the Page signal when the All Call Minus command is used and do not automatically receive either the EVAC or Alert signals.

The All Call command directs the page signal to all areas of the building, as illustrated in the last column of Figure 1-17.

Any combination of floors and stairwells could be selected to receive the page by manually selecting the audio zones on the audio zone select control/display module. Notice that at no time does any area receiving a signal have its signal interrupted by any page command function.

Evacuation (EVAC) channel

The EVAC channel always carries a signal designed to notify the occupants they must leave the facility. The evacuation signal may take the form of a textual message, a variety of audio tones, or an audio tone modulated by the standard 3-3-3 evacuation pattern, or any combination of these signals.

The EVAC channel is preprogrammed, and activated by the system in response to an alarm. The EVAC signal is automatically sent to the areas that are in danger and require immediate evacuation.

The EVAC channel has priority over all channels signals except for the Page channel. The alarm silence function automatically silences the EVAC channel when an operator presses the Alarm Silence switch.

Alert channel

The Alert channel always carries a signal designed to notify the occupants that an emergency situation exists in the facility. Occupants hearing the alert signal are not in immediate danger, but should prepare to evacuate. In some installations, the alert signal advises occupants that persons evacuating the danger area will be entering the area for safety.

The Alert channel is preprogrammed, and activated by the system in response to an alarm. The Alert signal is automatically sent to areas that are not in immediate danger and do not require immediate evacuation.

The Alert channel has priority over all other channels except the Page and EVAC channels. The alarm silence function automatically silences the Alert channel when an operator presses the Alarm Silence switch.

General channel

The General channel is used to distribute special purpose signals to special areas in the facility. Typically these areas include elevator cabs, stairwells, and areas in less peril than those areas receiving the Alert signal.

The general channel signals can be preprogrammed in response to an alarm, or they may be manually activated.

General channels have a lower priority than the Alert channel. The alarm silence function does not automatically silence the Alert channel unless programmed to do so.

Manual audio zone selection

If manual audio zone selection is required on the system, the appropriate control/display modules must be mounted on modules in the same cabinet as the Audio Source Unit. Typical configurations of control/display modules is shown in Figure 1-18. Exact operation of each display is dependent on system programming. Typical operation is described below.

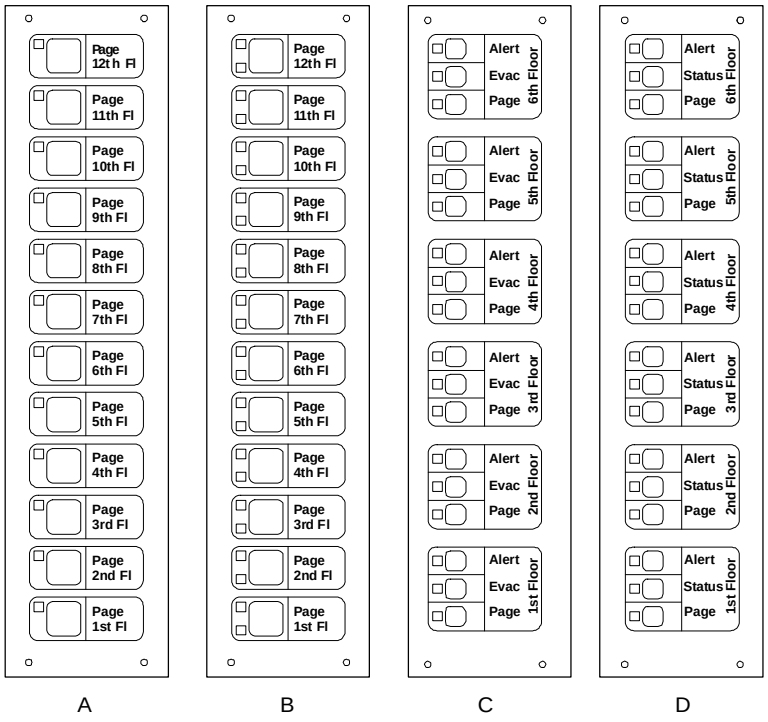

Figure 1-18: Audio zone selection displays

Display A is a model 3-12SG. Each floor switch provides audio zone selection for the Page signal, and the integral green LED indicates the audio zone is selected.

Display B is a model 3-12GY. Each floor switch provides Page audio zone selection. The green LED to the upper left of the switch indicates the audio zone is selected. The yellow LED to the lower left of the switch indicates audio circuit trouble.

Displays C and D are model 3-6/3Sxxx. The display C configuration permits manual selection of the Alert, EVAC, and Page signals by floor. This configuration is well suited for systems which do not sound signals through the entire facility during an alarm. Responsible authorities can then manually add EVAC and Alert signals to other floors of the facility. Display configuration D is used in facilities which sound the Alert signal in all areas not receiving the EVAC signal. This eliminates the need to switch the Alert signal. The middle switch is not used, the middle LED indicates amplifier status.

Messages

General

While there is no standardization on message content, messages must tell the occupant what is happening, why it is happening, and what actions they should take.

As a rule, each message should be repeated three times. If there is more than one language spoken in the area, the messages should be provided in each language.

A male voice has been demonstrated to be more authoritative than a female voice, and should be used where urgency is required. A female voice has been shown to initially gain the public's attention quicker than a male voice.

Alarm message format

The basic alarm message format consists of an alarm tone followed by an evacuation message repeated three times. The suggested alarm tone can take the form of a 1000 Hz tone modulated by the standard 3-3-3 evacuation pattern, a slow whoop, an electronic bell, a constant tone, or a constant tone modulated at a 120 pulse per minute rate. Please refer to the Authority Having Jurisdiction for specific requirements.

Typical Alarm Message text:

> Female Voice: "May I have your attention please. May I have your attention Please." Male Voice: "There has been a fire reported in the building." "Proceed to the nearest stairwell and exit the building." "Do not use the elevators." "Repeat, do not use the elevators."

Note: The EST3 amplifiers operate in a stand-alone mode should they lose communication with the Audio Source Unit. The alarm tone used in the alarm message should be the same tone used by the amplifier for stand alone alarm signaling.

Alert message format

The basic alert message consists of an alert tone followed by an advisory message. The suggested alert tone should be easily differentiated from the alarm tone and can take the form of a constant tone, or a constant tone modulated at a 20 pulse per minute rate. Please refer to the Authority Having Jurisdiction for specific requirements.

Typical Alert message text:

> Female Voice: “May I have your attention please. May I have your attention Please.” Male Voice: “There has been an emergency reported in the building.” “Your area is in no immediate danger.” “People from other areas of the building may be entering your area.” “Be prepared to leave the building if you hear the evacuation signal.” “Repeat, you are in no immediate danger.”

Informative messages

Informative messages are those special purpose signals to areas of the facility which may have special concerns during an emergency situation. Typically these areas include elevator cabs, stairwells, and areas in less peril than those areas receiving the Alert signal. Some sample informative messages appear below.

Elevator message text:

> Female Voice: “May I have your attention please. May I have your attention Please.” Male Voice: “There has been an emergency reported in the building.” “The building manager has directed the elevators to the lobby.” “Please exit the building when you reach the lobby.”

Stairwell message text:

> Female Voice: “Please continue down the stairs to your assigned re-entry floor or the lobby.” “Do not attempt to use the elevators.”

Do Not Enter message text:

> Male Voice: Do not enter this area.” “This is not an exit.” “An emergency has been reported in this section of the building.” “Please exit the building using a marked fire exit.”

Message and tone storage

The prerecorded messages and tone sequences are stored in a digital format in the 3-ASU Audio Source Unit internal memory. When the message and tone library exceeds two minutes in total length, a 3-ASUMX/32 Expansion Memory card must be installed in the 3-ASU. The 3-ASUXM/32 provides additional storage space for up to 32 minutes of messages.

Messages and tone sequences are created and downloaded directly into the Audio Source Unit using the SDU and a computer equipped with a compatible sound card.

Firefighter phone system

Five phone off-hook limit

The circuitry on the 3-FTCU Firefighter Telephone Control Unit can support up to five telephones off-hook in addition to the master handset at the 3-FTCU at any one time. The flexibility of the EST3 system permits any number of phones to be wired on a single phone circuit, as long as they are not all used simultaneously. There are a number of different designs which can be used to insure that no more than five phones are active at any one time.

One phone per circuit

The advantages of installing a single firefighter phone station or jack on a SIGA-CC1 Signature module (personality code 6) are numerous. The system provides complete control and annunciation phone/circuit. Installing a single phone on a circuit permits the operator to immediately identify the exact location of the calling party. Because the 3-FTCU will only permit five circuits to be connected simultaneously, the maximum number of off-hook handsets can never be exceeded. Should a branch telephone circuit be damaged during a fire, the fault will not affect other phone circuits. When there is only one phone per circuit, troubleshooting of faults is simplified.

The largest disadvantage of installing one phone per branch telephone circuit is cost. Each phone location requires a separate SIGA-CC1 module.

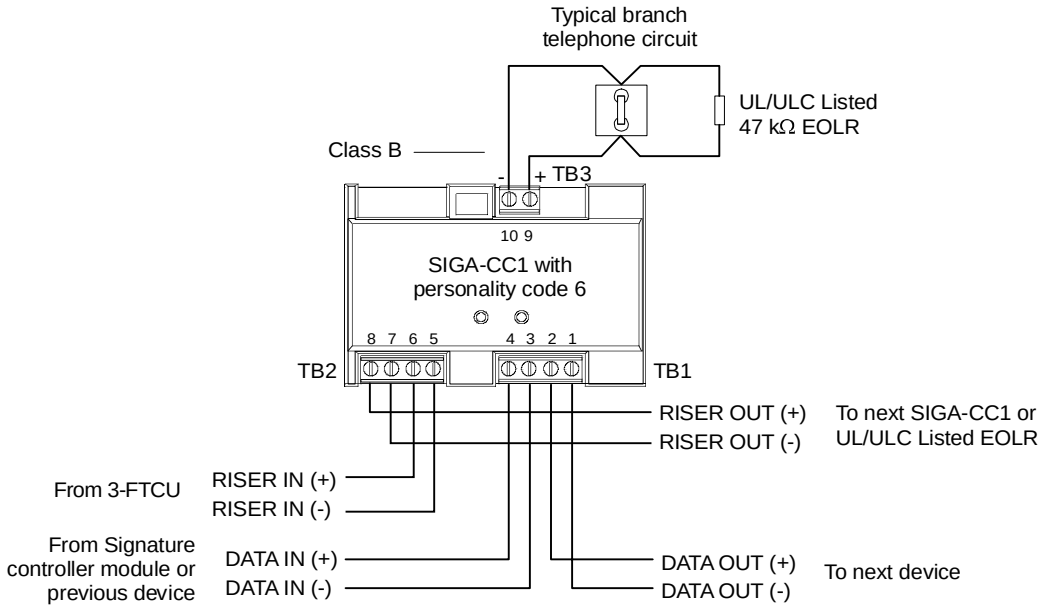

Figure 1-19: SIGA-CC1 with one phone installed

Five phones per circuit

Installing up to five phones per branch circuit is a realistic compromise between installing a single phone per circuit and more than five phones per circuit. In the rare instance that all five phones are off-hook and a need to communicate with a sixth remote phone arises, the 3-FTCU operator can temporarily disconnect the entire branch circuit. Then the second branch circuit can be connected to complete the conversation.

The advantages of installing up to five telephone stations or jacks on a SIGA-CC1 Signature module (personality code 6) are: a reasonable balance between cost and performance; and the system maintains the high quality voice circuit at all times because the maximum number of off-hook handsets can never be exceeded.

The main disadvantage of installing up to five phones per branch telephone circuit is that a circuit failure can render the entire branch circuit useless. Additionally, the location of the incoming caller is not precisely known, and troubleshooting is more difficult.

Limited number of portable telephone handsets

Another method of limiting the number of off-hook phones to five limits the number of available portable phones available to the fire department to five. The biggest advantage of this method

is low cost, as multiple remote telephone jacks can be installed on a single branch circuit.

The main disadvantage of this method are: that five phones may not be adequate to properly cover the facility; a circuit failure can render many of the phone jacks useless; the location of the incoming caller is not precisely known; and troubleshooting is more difficult.

Chapter 2

Security applications

Summary

EST3 has powerful and flexible security capabilities. This chapter introduces you to the equipment required for security systems.

This chapter also illustrates and describes several security applications. Each application is presented as a separate topic that includes a block diagram and description. These give you an overview of the application, and show the components required and their interconnection.

Refer to the *EST3 Installation Sheets* for specific component settings and terminal connections.

Content

Security equipment • 2.2
Certificate installations • 2.8
Multiple 3-MODCOM modules • 2.13
Multiple site security and access • 2.14
Multiple tenant security • 2.17
Secure access • 2.21

Security equipment

Introduction

The equipment required for a general security system is shown in Figure 2-1. We'll discuss each item shown in the drawing, plus the *other factors* called out on the drawing.

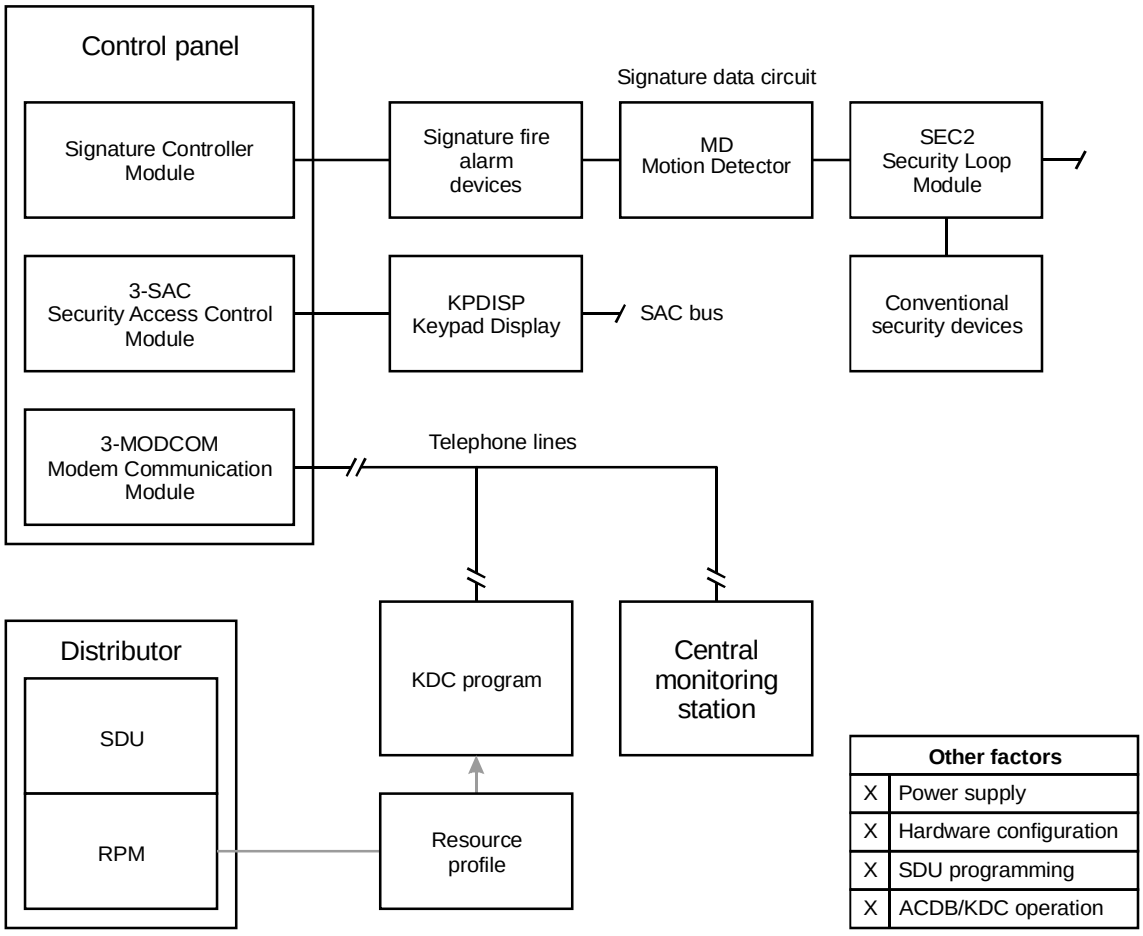

Figure 2-1: Equipment required for a basic security system

Equipment

The equipment used in security applications includes:

- Control panel
- Signature Controller module
- SIGA-MD Motion Detector module
- SIGA-SEC2 Security Loop module
- 3-SAC Security Access module
- SAC bus

- KPDISP Keypad Display
- 3-MODCOM Modem Communication module
- RPM Resource Profile Manager tool
- KDC Keypad Display Configuration program

Control panel

It is a UL listing requirement that all cabinets in a system that includes security functions must have a tamper switch. The control panel must include a 3-TAMP, 3-TAMP5, or 3-TAMPRCC Cabinet Tamper Switch.

Signature Controller module

The Signature data circuit plays a dual role in integrated systems. First, it supports devices and modules belonging to the fire alarm system. Second, it supports security devices that are part of the security system.

Figure 2-1 shows a Signature Controller module with a Class B Signature data circuit. Shown on this circuit are Signature fire alarm devices, plus two security devices, the SIGA-MD and the SIGA-SEC2.

Several Signature Controller models are available, and can be used with integrated systems.

Note: Security devices can also be installed on the SAC bus via CRCs, or on an analog device loop.

SIGA-MD Motion Detector module

The SIGA-MD is a passive infrared motion detector that connects to the Signature loop. The detector has alarm and tamper output monitoring capability. A contact closure causes an alarm but does not latch at the module.

The SIGA-MD provides six separate curtain coverage patterns with a 34-foot range. The detector can be mounted in flat corners or on walls up to a height of ten feet.

SIGA-SEC2 Security Loop module

The SIGA-SEC2 Security Loop Module is an intelligent analog addressable device that connects one or two security loops to a Signature data circuit. In Figure 2-1 this is indicated by the conventional security devices connected to the SIGA-SEC2.

The operation of the SIGA-SEC2 is determined by its device type and personality code. These are assigned during system design and configuration.

3-SAC Security Access Control module

The 3-SAC Security Access Control rail module controls a high-speed RS-485 circuit called the Security Access Control (SAC) bus. The SAC bus supports fire, security, and access control devices.

The 3-SAC handles message traffic for these devices, interfacing them with the CPU as required. Events are passed from the devices to the 3-SAC module, then to the CPU for alarm processing.

The 3-SAC has two sets of circuit terminals, and is capable of Class A or Class B configuration. Each Class B circuit can include 31 devices, for a total of 62 devices per module. Class A circuits can include 30 devices total. In the figure, we show a Class B bus with a KPDISP Keypad Display control and display module.

SAC bus

Since our security and access control devices require 24 Vdc, we suggest that you always use a four-wire cable (two twisted-pairs) for the SAC bus and a 24 Vdc power supply.

For the data wires we suggest unshielded, twisted pair, with greater than 6 twists per foot, in 14 to 22 AWG (1.50 to 0.25 sq mm).

For the power wires, we recommend 14 or 16 AWG.

KPDISP Keypad Display

Tip: To improve system performance in systems with a high number of partitions or cardholders, limit the volume of network messages. To do this, create partition routing groups so that only essential messages are sent to each KPDISP. In practice, limit the average number of partitions in a partition routing group to 10 or less.

The KPDISP Keypad Display is a control and display module for security and fire alarm systems. The KPDISP has an LCD display and a telephone-style keypad. It operates on the 24 Vdc power supplied with the SAC bus.

The KPDISP is completely menu-driven. It lets the system user:

- Arm and disarm partitions
- Review off-normal points
- Bypass or disable points
- Execute fire alarm panel commands

Each KPDISP stores its portion of the security database.

You can create a security system that is operated via the LCD module alone, or in combination with any Control/LED display module. See the topic “Secure access.”

3-MODCOM Modem Communicator module

The 3-MODCOM Modem Communicator module has both modem and dialer functions. It can transmit and receive information.

The 3-MODCOM can transmit alarm, supervisory, or trouble messages to a remote central monitoring station using one or two telephone lines. A variation of the module (3-MODCOMP) can transmit pager messages to a paging company using the TAP protocol. The 3-MODCOMP remote paging feature is supplemental and is not supervised.

The module can also receive information sent over telephone lines by the Keypad Display Configuration program.

RPM Resource Profile Manager tool

The Resource Profile Manager (RPM) tool is part of the SDU. It uses the project database to let you create a separate resource profile for each company that will be using the security system.

The resource profile defines the security system for the KDC program. It includes such information as:

- The KPDISPs in the system
- The routing required to access each KPDISP for downloads
- Which KPDISPs can execute fire alarm system commands

The resource profile is imported into the KDC program during installation.

KDC Keypad Display Configuration program

The Keypad Display Configuration (KDC) program lets the system user define and maintain a database of information about KPDISPs, users, and access levels. This is part of the overall security database.

The KDC program runs on the user's PC. Additions or updates to the security database can be transmitted to the KPDISP units in two ways.

The first method is via modem and dial-up telephone line to the3-MODCOM. The information is then routed to the CPU, through the correct 3-SACs, and finally to the affected KPDISP units.

The second method is by connecting the user's PC directly to the CPU using an RS-232 cable. The connection is made between the PC's COM1 port and any of the RS-232 terminals on the CPU. As in the first method, after reaching the CPU additions and changes are routed through the correct 3-SACs to the affected KPDISPs.

Note: Fire and security functionality cannot be programmed into a control panel from a remote location. You must perform all panel programming on site. Changes to the security database have no impact on the parameters or operations of listed fire system equipment.

When the site includes an access control system, the Access Control Database (ACDB) program is used in place of the KDC. The ACDB includes the required KDC functionality.

Other factors

Next, we'll cover the additional factors listed on the drawing:

- Power supply
- Hardware configuration
- SDU programming
- ACDB/KDC operation

These factors are called out on each application diagram given in this chapter.

Power supply

The KPDISP is designed to operate on 24 Vdc. For this reason, we recommend that you include power from the panel with the SAC bus cable. You can use the panel 3-PPS/M, 3-BPS/M, or 3-BBC/M power supplies.

Note that additional power supplies must be listed for the application.

Hardware configuration

The KPDISP does not have any switch or jumper settings. All configuration is done with the SDU program.

SDU programming

While the KDC program controls a small portion of the security database, all other definition, configuration, and programming for the security system happens in the SDU.

The SIGA-MD and SIGA-SEC2 are both treated as modules on the Signature data circuit. You configure each security module using the SDU.

The SDU controls the general configuration of the 3-SAC modules, plus the configuration of all CRC or KPDISP devices on the SAC busses.

KPDISP modules can be configured to execute a specific, predefined command list when a specific security or access

control event occurs. You write the command lists in the SDU, and assign them to KPDISP events when you configure the KPDISP module.

Partitions are fundamental groups used with security systems. A partition is a group of devices intended to provide security for a given area of the site. Partitions can be armed and disarmed separately.

All partitions are created and defined in the SDU, and each CRC, CRC input circuit, KPDISP, SIGA-SEC2 circuit, and SIGA-MD circuit can be assigned to a partition. Partitions also play a role in KPDISP message routing.

For the 3-MODCOM module, the SDU determines the dialer and modem parameters, defines the receivers and accounts, and assigns each account to the correct receiver.

Finally, the SDU includes the RPM tool, described earlier in this topic.

ACDB/KDC operation

The Keypad Display Configuration (KDC) program runs on the end-user's PC. It lets him create and maintain a database of information about KPDISPs, users, and access levels. This is part of the overall security database.

During setup of the program, the user imports the resource profile created by the RPM during system programming.

Once installed, the user can create and revise his KDC database. Changes and additions are transmitted via modem to the 3-MODCOM or via direct RS-232 connection to the CPU. The data is then routed to the correct 3-SAC and KPDISP units.

Security applications

The remaining topics in this chapter cover specific security applications. Each topic gives you an overview of the application, and shows you the components required and their interconnection.

Each topic has a block diagram and general description of the application. Other factors (as called out on the drawings) are discussed under separate headings in each topic.

Certificate installations

Description of the applications

An installation company can be listed to install burglar alarm systems that are covered by UL under its Follow-Up Service. The listed company issues a certificate of the appropriate class, grade, and type.

This topic does not detail the steps required for certificate installations. You must follow UL 681 to determine the exact requirements for a given installation. Here, we simply list special EST3 equipment that can be used in the following applications:

- Central Station Alarm Certificate
- Police Station Connect Certificate
- Local Mercantile Alarm Certificate

Refer to Appendix C, “Listing requirements” for additional information.

Special equipment

Certificate installations require the use of specialized attack and tamper equipment. Here are brief descriptions of the special parts. The diagrams for each application show which parts are required.

ATCK Attack Kit: a replacement cover kit for the 3-RCC7 cabinet. The kit provides a two-minute attack delay time. It includes a red, overlapping box cover for the cabinet. The cover attaches to the backbox sides using sheet metal screws and four locks. The kit also includes special knockout plugs that secure the unused knockout holes.

3-TAMPRCC Cabinet Tamper Switch: a switch that detects removal of the cover.

Central station alarm certificate (UL Applications Only)

Figure 2-2 shows the equipment that can be used as part of a Central Station Alarm Certificate installation. Note that this is the same equipment used for a Police Station Connect Certificate installation.

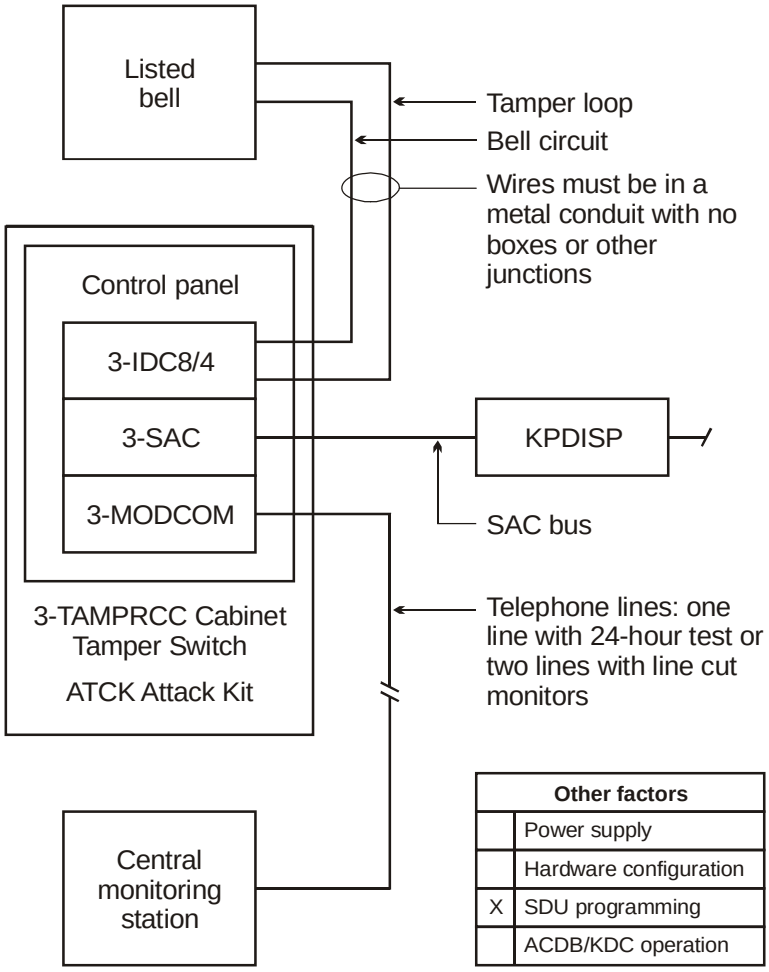

Figure 2-2: Components used with a central station certificate application

For this certificate, the control panel cabinet must be fitted with an ATCK Attack Kit and a 3-TAMPRCC Cabinet Tamper Switch. In addition, a listed local bell is required.

The bell must be positioned where it can be heard from every arming station in the system. You can use multiple bells if required.

The bell requires a tamper detection loop. Both the bell circuit and the tamper detection loop can be supported by a 3-IDC8/4 module.

A single phone line that is tested at least once in every 24-hour period can be used. Alternately, two lines with line cut monitoring can be used in place of a line with 24-hour testing.

If the central monitoring station (CMS) does not have testing services, the SDU can program the system to issue tests on a fixed or relative basis to meet this requirement.

The CMS must have a maximum response time of 30 minutes.

When this application includes partitions, the partition that contains the EST3 panel equipped with the 3-MODCOM and local bell must be armed 24 hours a day, and have limited, high-level access.

Police station connect certificate

The equipment, installation requirements, and application restrictions for a Police Station Connect Certificate installation are the same as for a Central Station Alarm Certificate installation, as described above.

Central station alarm certificate (UL Applications Only)

Figure 2-3 shows the equipment that can be used as part of a Central Station Alarm Certificate installation.

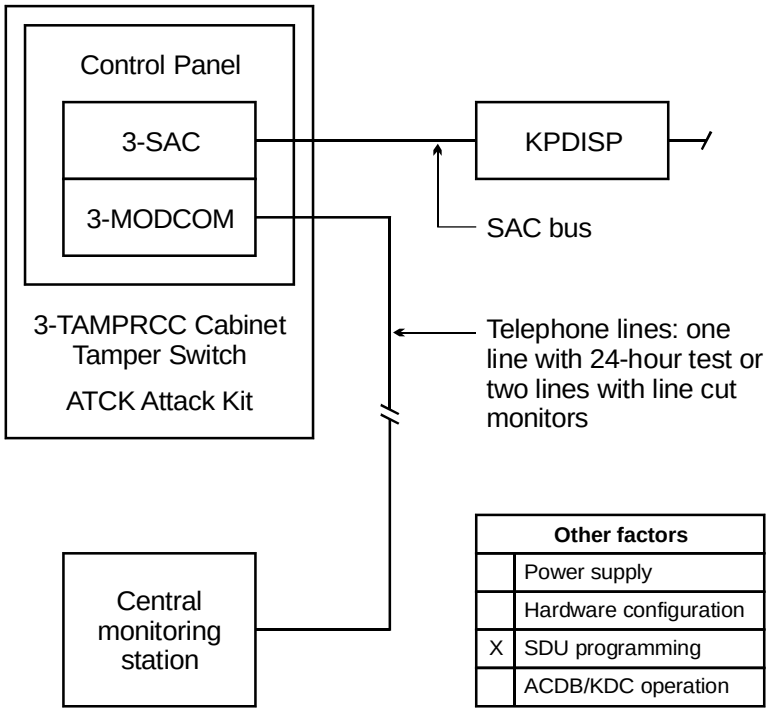

Figure 2-3: Central station certificate

This certificate requires that the control panel be fitted with an ATCK Attack Kit and a 3-TAMPRCC Cabinet Tamper Switch. No local bell is required.

A single phone line that is tested at least once in every 24-hour period can be used. Alternately, two lines with line cut monitoring can be used in place of a line with 24-hour testing.

When this application includes partitions, the partition that contains the EST3 panel equipped with the 3-MODCOM must be armed 24 hours a day, and have limited, high-level access.

In mercantile burglar alarm systems, you can locate an alarm sounding device outside the protected area, provided the sounding device is located inside the building, is rated for outside service, and you transmit alarm conditions to one of the following:

- The dispatch location of the law enforcement agency having jurisdiction over the protected property
- A central station or residential monitoring station complying with the Standard for Central Station Alarm Services, UL 827

You can also locate an alarm sounding device within the area of greatest protection, or outside the area of greatest protection within an area protected by an alarm system that shares a common control unit with the alarm system installed in the area of greatest protection, provided the sounding device is rated for inside service and you transmit alarm conditions to one of the following:

- The dispatch location of the law enforcement agency having jurisdiction over the protected property
- A central station or residential monitoring station complying with the Standard for Central Station Alarm Services, UL 827

In either case above, mount alarm sounding devices located inside building at least 10 feet (3.05 m) above the floor or at the surface of the ceiling. When there is fixed construction within the area that could provide access for an intruder, mount the alarm sounding device at least 4 feet (1.2 m) away from the edges of the fixed construction along the surface of the ceiling or at least 10 feet (3.05 m) above it so as to minimize access by an intruder.

Local mercantile alarm certificate

Figure 2-4 shows the equipment that can be used as part of a Local Mercantile Alarm Certificate installation. The control panel cabinet must be fitted with an ATCK Attack Kit and a 3-TAMPRCC Cabinet Tamper Switch. A listed local bell is also required.

The bell requires a tamper detection loop. Both the bell circuit and the tamper detection loop can be supported by a 3-IDC8/4 module.

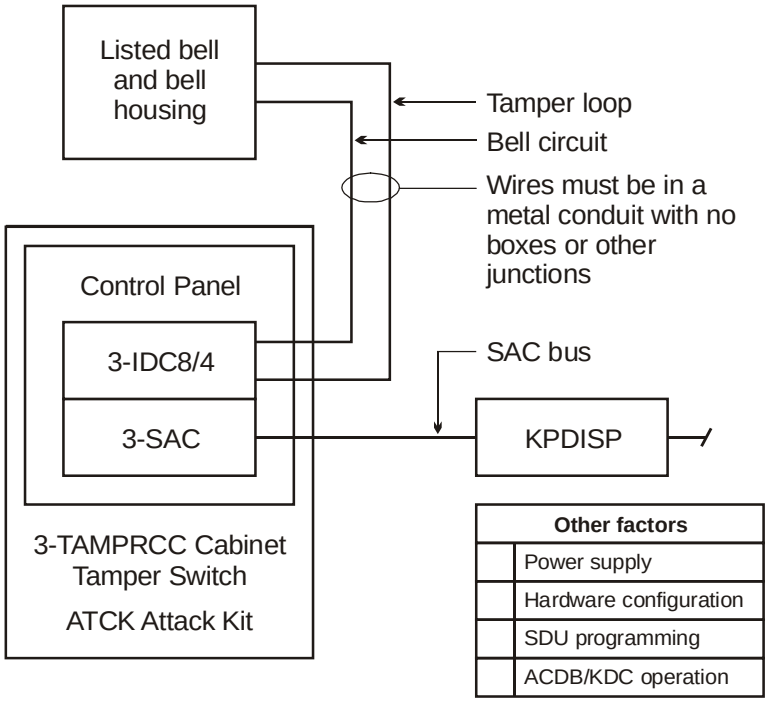

Figure 2-4: Local certificate

The bell must be positioned where it can be heard from every arming station in the system. You can use multiple bells if required.

In mercantile alarm systems that do not provide a remote alarm transmission connection, you must mount the alarm housing on the outside of the building in a location that is accessible, is not more than four stories above street level, and is visible from the public street or highway.

You may locate the alarm housing as high as the seventh floor, provided you do one of the following:

- Mount a second alarm sounding device and housing intended for outside service adjacent to the premises or area of the building in which the alarm system is installed
- Mount a second alarm sounding device and housing intended for inside service within the premises

Multiple 3-MODCOM modules

You can install more than one 3-MODCOM Modem Communicator module in a system. Two or more 3-MODCOM modules can be installed in the same cabinet. Two or more cabinets can contain 3-MODCOM modules.

There are several reasons for using multiple 3-MODCOMs:

- Redundant communication to a CMS
- Backup of critical communication links
- Dedicated security transmission hardware

In a redundant communication system both 3-MODCOMs are programmed to transmit the same message to different receivers at the CMS or at different CMS installations.

One 3-MODCOM can be programmed to back up another. This guarantees CMS communication (or TAP paging) should one panel in the system become disabled.

In a multiple tenant application, there may be a high volume of ACDB/KDC program traffic. You can design such systems with a second 3-MODCOM, dedicating the first module to ACDB/KDC traffic, and the second module to CMS transmissions. This prevents contention for communication channels.

Overall limits for the number of 3-MODCOM modules are:

- 10 modules per node
- 10 modules total per network

Multiple site security and access

Description of the application

Figure 2-5 shows how a company with multiple sites can centralize security and access control functions for all sites. This means an employee only needs to carry a single access card to gain appropriate access to any company site.

The figure shows a company with three plants, designated sites A, B, and C. Site C is chosen as the company headquarters for security and access control purposes.

Each site is a separate SDU project. At each site, the Resource Profile Manager (RPM) tool is used to create a profile for that site. This includes site C, the headquarters plant.

All the profiles are sent to the security office at site C for import into the Keypad Display Configuration (KDC) or Access Control Database (ACDB) program. This means that the programs will present all resources at all sites in a single hierarchy, as shown by the tree diagram.

The security personnel at site C can create global access groups. This means that they can assign an employee the correct security and access privileges for all sites from one central location. The employee can carry a single access card that will grant him the correct security and access privileges at each site.

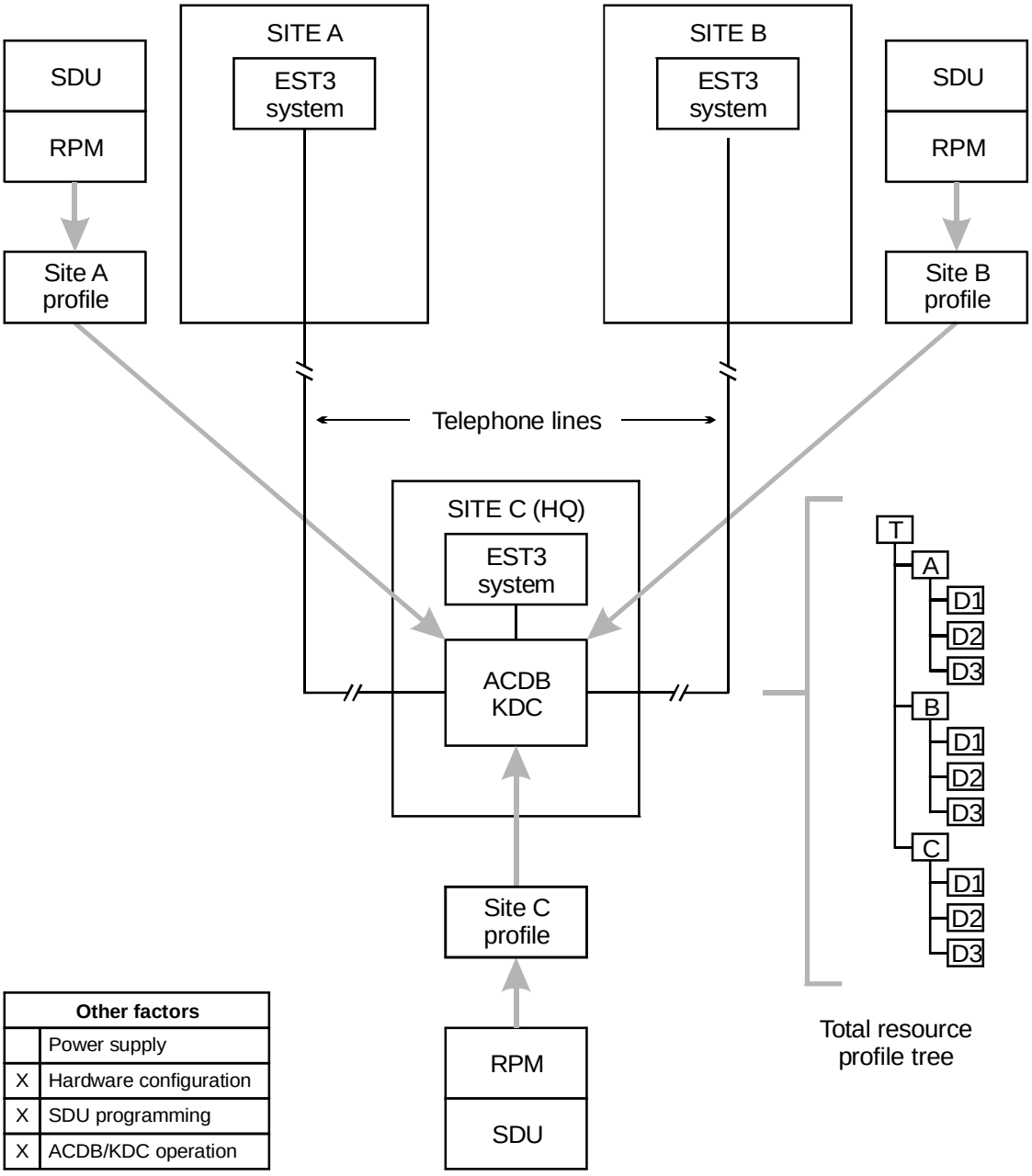

Other factors	
	Power supply
X	Hardware configuration
X	SDU programming
X	ACDB/KDC operation

Figure 2-5: Multiple site security and access control system

Hardware configuration

Each site must have an EST3 system. In each EST3 system, at least one panel must include a 3-MODCOM module to support modem communication between headquarters and sites A and B.

The KDC and ACDB programs can communicate with the EST3 system either by modem, or by direct connection to an RS-232 port on the CPU module.

Each system includes 3-SAC modules as required to support the security and access control systems implemented.

Rules covering installation and classification (of extent) of alarm equipment at individual locations are published in the *Standard for Installation and Classification of Burglar and Holdup Alarm Systems* UL681.

SDU programming

No special project programming is required to enable multiple site security and access control systems. When running the RPM tool, each site receives 100% of the resources for that site.

Note that all profiles must be sent to the site C headquarters when the project is finished.

ACDB/KDC operation

At the headquarters site, all three profiles are imported into the ACDB/KDC program. The result is a global tree of resources that includes each KPDISP and CRC device in each site.

Importing all the profiles into one ACDB/KDC program creates the global database.

When additions or changes to the KPDISP database are made, headquarters can transmit the changes to the affected sites.

Multiple tenant security

Description of the application

Figure 2-6 illustrates a simple strip mall security application. The mall consists of three identical stores and an electrical room.

The control panel supports a SIGA data circuit and a SAC bus. The panel also supports modem communications via telephone lines.

The SIGA circuit has pull stations and smoke detectors. In addition, the SIGA circuit has two security devices, the motion detector and the SIGA-SEC2 security loop module. The SIGA-SEC2 connects a conventional door contact to the SIGA circuit.

The SAC bus is used exclusively for the KPDISP devices.

Each company owner has a Keypad Display Configuration (KDC) program. The program runs on a computer equipped with a modem, and uses the modem and a dial-up telephone line to communicate with the control panel.

Each company owner can use the KDC to download changes to that company's portion of the security database. The changes are routed through the panel to the appropriate KPDISP unit.

Note: Fire and security functionality cannot be programmed into a control panel from a remote location. You must perform all panel programming on site. Changes to the security database have no impact on the parameters or operations of listed fire system equipment.

The control panel can be configured to provide telephone connection to a central monitoring station (CMS). Each tenant company can have a separate account at the same CMS, or can use the services of a separate CMS.

Refer to Appendix C, "Listing requirements" for additional information.

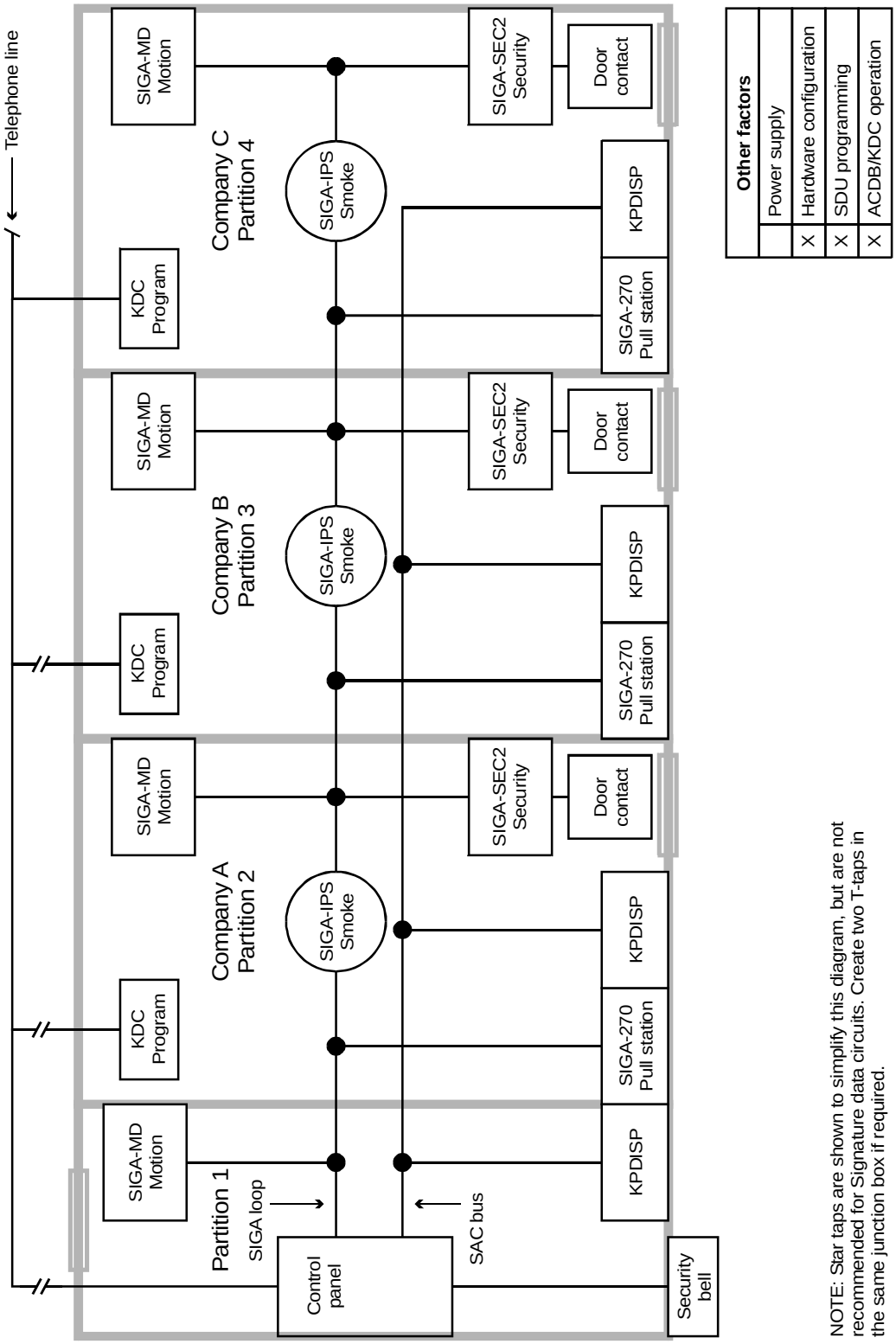

Figure 2-6: Multiple tenant security in a strip mall

Hardware configuration

The control panel contains the following rail modules:

- Signature Controller module
- 3-SAC Security Access Control module
- 3-MODCOM Modem Communicator module

The Signature Controller module supports the SIGA loop.

The 3-SAC module supports the SAC bus. Power for the KPDISP can be taken from the 3-PPS/M and routed with the data lines in a cable composed of two twisted-pair wires.

The 3-MODCOM module supports modem communication between the control panel and the KDC programs via telephone lines.

In the Class B configuration illustrated, an appropriate RS-485 line terminating resistor is required in the KPDISP located in partition 4.

The electrical room, partition 1, must be armed 24 hours a day, and have limited, high-level access.

SDU programming

When programming the system for this application, you define the required partitions and assign the correct partition number to each security device.

Part of the programming effort includes using the Resource Profile Manager (RPM) tool to create resource profiles for the site owner and for each company owner.

Since none of the devices are shared, each company should receive 100% of the resources of their KPDISP. A small percentage may be set aside for use of the site owner, depending on the owner’s policy.

Programming for the 3-MODCOM module determines the dialer and modem parameters, defines the receivers and accounts, and assigns each account to the correct receiver.

Finally, when running the RPM tool, you specify which, if any, of the KPDISP modules can execute fire system commands. Typically, this privilege is reserved for the site owner or site security staff.

Refer to the *SDU Online Help* for more information.

KDC operation

Each company owner must import the resource profile output from the RPM. After importing this resource data, each company

owner can create his portion of the security database, according to the instructions included with the KDC program.

Changes to the tenant portion of the security database can be made at any time, and from any location.

Note: Fire and security functionality cannot be programmed into a control panel from a remote location. You must perform all panel programming on site. Changes to the security database have no impact on the parameters or operations of listed fire system equipment.

Secure access

Description of the application

Secure access is a simplified type of security application. Typical secure access applications are operated from a secured control panel, and use partitions with no entry or exit delay timers.

Secure access applications often use the control panel LCD module (or dedicated Control/LED display modules) to control the security partitions. Partitions can be armed or disarmed using any of the following:

- LCD menus
- EST3 Control/LED modules
- FireWorks interface
- ENVOY annunciators
- KPDISP

A secure access system can be implemented using either Signature or Analog Addressable security devices. Signature devices are less prone to false alarms, and are more resistant to tampering, since they cannot be swapped with deliberately compromised devices.

SDU programming

When you create a secure access application, use the SDU to create partitions as required. When configuring the partitions, set the Entry Delay Timer and Exit Delay Timer values to zero. When configuring SIGA-SEC2 and SIGA-MD devices, set the Delay to None.

You can use LCD menu commands to arm and disarm the partitions. To do so, you must check the Enable LCD Security Control Functions check box. This is located on the Options tab of the Cabinet Configuration dialog box. Checking this box causes the Security menu to appear in the Command Menus list.

You can use any suitable Control/LED module to arm and disarm partitions. Configure the switches as momentary contact switches, and use them to activate command lists. Program the command lists to perform the desired arm and disarm actions and control the LEDs.

Refer to the *SDU Online Help* for more information on rule programming for secure access applications.

Chapter 3

Access control applications

Summary

EST3 supports rugged and adaptable access control systems. This chapter introduces you to the equipment required for access control applications.

This chapter also illustrates and describes several access control applications. Each application is presented as a separate topic that includes a block diagram and description. These give you an overview of the application, and show the components required and their interconnection.

Refer to the *EST3 Installation Sheets* for specific component settings and terminal connections.

Security applications make use of the CRC Card Reader Controller. Refer to the *CRC and CRCXM—Card Reader Controller Installation Sheet* for specific installation information on this module.

Content

Access control equipment • 3.2
Anti-passback • 3.11
Central monitoring station • 3.14
Common door access • 3.16
Delayed egress • 3.18
Elevator control • 3.21
Emergency exit door • 3.24
Handicap access door • 3.26
Maglock peripherals • 3.28
Multiple card readers • 3.30
Muster • 3.32
Power for continuous locks • 3.35
Power for intermittent locks • 3.37
Power from an AC source • 3.39
Power from a remote source • 3.42
Remote controls • 3.45
Two-person rule • 3.47

Access control equipment

Introduction

The equipment required for a basic networked access control system is shown in Figure 3-1. We'll discuss each item shown in the figure, plus the *other factors* called out on the drawing.

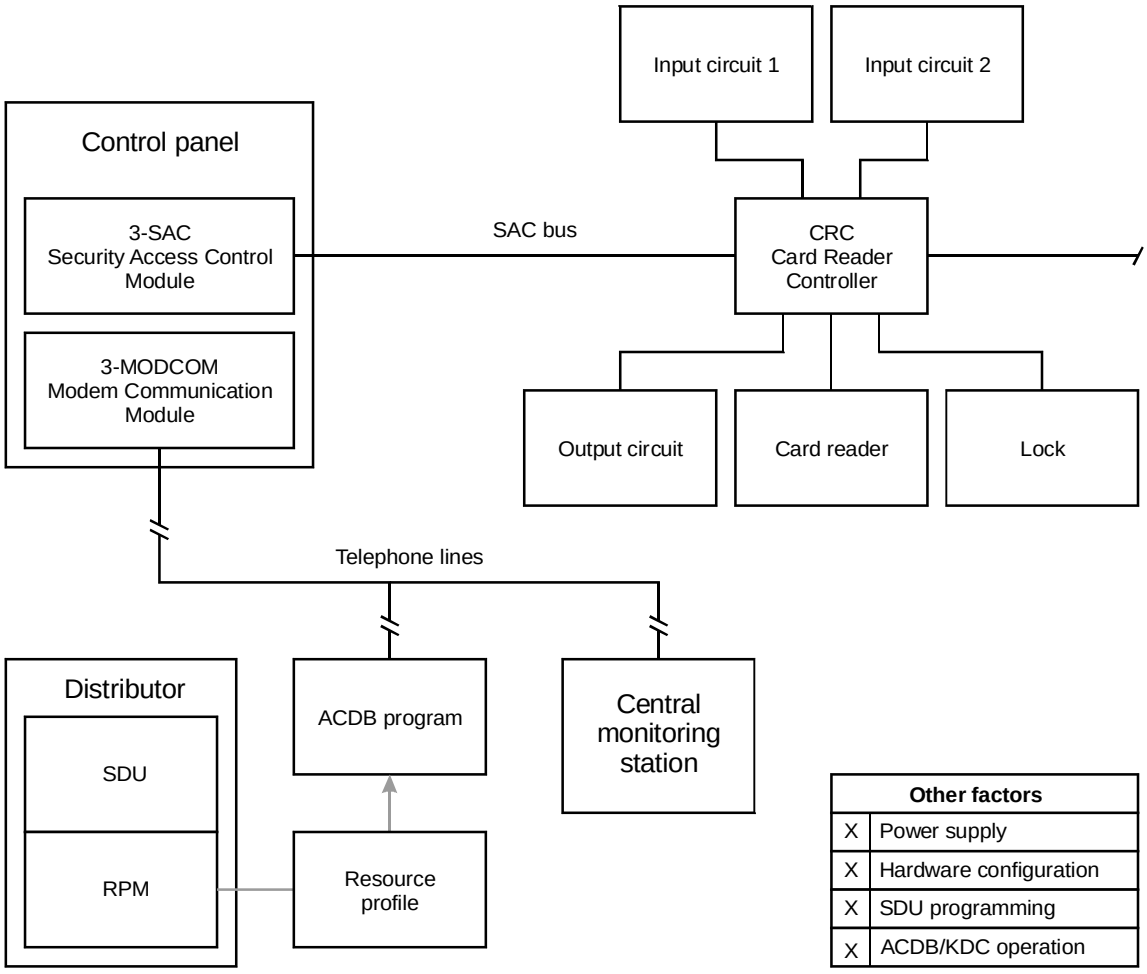

Figure 3-1: Equipment required for a basic access control system

Equipment

Here is a list of the equipment used in a basic networked access control system:

- 3-SAC Security Access Control module
- 3-MODCOM Modem Communication module
- SAC bus
- CRC Card Reader Controller

- Input circuit 1
- Input circuit 2
- Output circuit
- Card reader
- Lock
- RPM Resource Profile Manager tool
- ACDB Access Control Database program

3-SAC Security Access Control module

The 3-SAC Security Access Control rail module controls a high-speed RS-485 circuit called the Security Access Control (SAC) bus. The SAC bus supports fire, security, and access control devices.

The 3-SAC handles message traffic for these devices, interfacing them with the CPU as required. Events are passed from the devices to the 3-SAC module, then to the CPU for alarm processing.

The 3-SAC has two sets of circuit terminals, and is capable of Class A or Class B configuration. Each Class B circuit can include 31 devices, for a total of 62 devices per module. Class A circuits can include 30 devices total. In Figure 3-1, we show a Class B bus with a CRC Card Reader Controller module.

3-MODCOM Modem Communicator module

The 3-MODCOM Modem Communicator module has both modem and dialer functions. It can transmit and receive information.

The 3-MODCOM can transmit alarm, supervisory, or trouble messages to a remote central monitoring station using one or two telephone lines. A variation of the module (3-MODCOMP) can transmit pager messages to a paging company using the TAP protocol.

The module can also receive information sent over telephone lines by the Access Control Database (ACDB) program.

SAC bus

Since our security and access control devices require 24 Vdc, we suggest that you always use a four-wire cable for the SAC bus and a 24 Vdc power supply.

For the data wires, use unshielded, twisted pair, with greater than 6 twists per foot, in 14 to 22 AWG (1.50 to 0.25 sq mm). For the power wires, use 14 or 16 AWG.

You can use a four-conductor cable with an overall jacket containing solid 2-19 AWG and 2-16 AWG for the SAC bus.

The maximum run from a CRC to the 3-SAC is 4,000 ft (1,220 m) at 25 pF/ft. The maximum total capacitance of the run is 0.1 μF, and the maximum total resistance is 52 Ω.

CRC Card Reader Controller

The Card Reader Controller (CRC) module performs all access decision processing. Each CRC stores a database and is capable of granting or denying entry without external communication. If entry is granted, the CRC applies or removes power to the strike or maglock to unlock the door. The CRC is also capable of unlocking a door by activating a manual push button.

Each CRC stores an access database of users and events for the door it controls. The CRCXM model features enhanced storage capacity. (Refer to the product installation sheets for quantities.)

Each CRC has terminals that support:

- Two card readers, typically one inside and one outside the door
- One lock device, either strike or maglock type
- Two input circuits for devices such as request to exit detectors, door contacts, or motion detectors
- One output circuit with N.O and N.C. contacts for auxiliary devices, such as door openers

With the addition of an internal battery, the CRC can continue processing access events even if there is a loss of communication or power.

CRC options

CRCSND CRC Sounder

The CRC Sounder is a small horn that mounts inside the card reader controller module. The sounder operates if an emergency exit door is opened without an exit request and can also indicate that a door has been left open.

The CRC Sounder can be programmed, using rules written in the SDU. Further, the ACDB program can control several operating parameters of the sounder.

CRCRL CRC Accessory Relay

The CRCRL is an accessory relay for the CRC (or CRCXM) Card Reader Controller. Use the CRCRL in conjunction with an external power supply to control a lock which requires voltage or current outside the CRC's operating range.

The CRCRL can be mounted inside the CRC housing when connected to power-limited wiring. The unit includes a hook-and-loop patch which can be attached to the CRC battery strap.

When nonpower-limited wiring is used, the CRCRL must be mounted in a junction box.

The CRCRL is listed as an Access Control Accessory and Control Unit Accessory.

Battery

Each CRC has space for an internal, 1.2 Ah, sealed lead-acid battery. The battery supplies power to the CRC and its peripherals, and provides local standby power.

The CRC battery provides 30 minutes of standby power for access control functions and up to 4 hours for security functions. The battery cannot be used for fire applications.

CRCXF CRC Transformer

The CRCXF CRC Transformer is a 16.5 Vac transformer that can power the CRC or CRCXM. It provides local power for applications requiring additional power at door lock. The CRC has AC load terminals for easy connection to transformer.

Be sure to check the CRC installation sheet for a list of applications that prohibit the use of the CRCXF.

Input circuits 1 and 2

Each CRC supports two input circuits for such devices as:

- Door contacts
- Motion detectors
- Request to exit (REX) switches
- Security devices

A door contact device monitors the door position (open or closed) for various applications.

A motion detector detects a person’s approach and can be used to unlock the door.

A request to exit (REX) push button (or bar) can be used to manually unlock the door.

Security devices, such as glass-break detectors can be associated with the door to enhance its security, or to monitor a nearby window.

Output circuit

Each CRC supports one output circuit in the form of N.O. and N.C. dry contact connections. The output circuit can be used for such devices as:

- Automatic door openers
- Door holder control

Card reader

By *card reader*, we mean any of the different types of credential reader supported by the CRC. A card reader scans a card to determine the card number and passes the card number to the CRC.

A card reader is a self-contained module capable of reading one type of access card and transmitting the card's code to a card reader controller.

All the required electronics are assembled in the card reader housing. The card reader connects directly to the CRC, which processes the card code and grants or denies access.

Each CRC can support several card readers. Typically, a CRC will control an entry and exit card reader for the doorway. It can also support multiple readers for such applications as two-person rule or anti-passback.

Note that the CRC supports any type of reader that uses the industry standard Wiegand output format. These include:

- Proximity
- Wiegand pin
- Magnetic stripe
- Bar code
- Keypad
- Smart card
- Biometric

For simplicity, we present all the applications in this chapter as operating with proximity readers, but other reader types can be used.

Some applications work best with card readers that support dual LED control. The CRC uses two LEDs, or two LED states, to indicate that further actions are required after the initial badging operation, before access is granted. These applications are:

- Two-person rule
- Visitor and escort
- PIN schedule

Some card readers are also equipped with a keypad. The keypad allows for entry of a PIN number in addition to the card code.

The CRC can accommodate any PIN number of 1-4 digits along with the associated card code. The need to enter a PIN is controlled by two factors: whether or not the CRC is armed, and whether or not the access schedule calls for use of a PIN.

Lock

The CRC supports any type of door locking or releasing device. Common lock devices are strikes and maglocks. A strike *opens* the door when power is supplied, while a maglock *secures* the door while power is supplied.

RPM Resource Profile Manager tool

The Resource Profile Manager (RPM) tool is part of the SDU. It uses the project database to let you create a separate resource profile for each company that will be using the access control system.

The resource profile defines the access control system for the ACDB program. It includes detailed information about each CRC used by a given company. For example:

- Communication method
- Primary or secondary control
- Number of cardholders
- Number of schedules
- Number of holidays
- Number of access levels
- Command lists used

ACDB Access Control Database program

The Access Control Database (ACDB) program lets you define and maintain a database of information about CRCs, cardholders, and access levels.

The ACDB program runs on the your PC. Additions or updates to the access control database can be transmitted to the CRC units in two ways.

The first method is via modem and dial-up telephone line to the 3-MODCOM. The information is then routed to the CPU, through the correct 3-SACs, and finally to the CRC units.

The second method is by connecting your PC directly to the CPU using an RS-232 cable. The connection is made between the PC’s COM1 port and any of the RS-232 terminals on the CPU. As in the first method, after reaching the CPU additions and changes are routed through the correct 3-SACs to the CRCs.

Note: Changes to the access control database have no impact on the parameters or operations of listed fire system equipment.

Other factors

Next, we'll cover the additional factors listed on the drawing:

- Power supply
- Hardware configuration
- SDU programming
- ACDB/KDC operation

These factors are called out on each application diagram given in this chapter.

Power supply

The CRC is designed to operate on 24 Vdc. For this reason, we recommend that you include power from the panel with the SAC bus cable. You can use the panel 3-PPS/M or 3-BPS/M power supplies.

When using CRCXF CRC Transformer you must provide a circuit common path between all devices, using the –24 Vdc terminals.

If you use an additional power supply other than the CRCXF, that power supply must be listed for fire alarm applications, must have ground fault detection disabled, and must have a circuit ground (circuit common) that is isolated from earth ground.

Hardware configuration

The CRC has two jumpers that configure the power source and usage for the module. See the CRC installation sheet for details on the jumper settings.

No other configuration settings are made at the device itself. All other configuration is done via SDU or ACDB programming.

The SDU determines site-level configuration and parameters. The ACDB program controls end-user settings.

SDU programming

While the ACDB program defines the access control database, all other definition, configuration, and programming for the access control system happens in the SDU.

The SDU controls the general configuration of the 3-SAC modules, plus the configuration of all CRC devices on the SAC busses.

CRC modules can be configured to execute a specific, predefined command list when a specific access control event occurs. You write the command lists in the SDU, and assign them to CRC events when you configure the CRC module.

Partitions are fundamental groups used with access control systems. To use such access control features as two man rule, muster, or anti-passback, CRCs must belong to the same partition. All partitions are created and defined in the SDU, and each CRC can be assigned to a partition.

For the 3-MODCOM module, the SDU determines the dialer and modem parameters, defines the receivers and accounts, and assigns each account to the correct receiver. These settings control CMS reporting and ACDB download operation.

Finally, the SDU includes the RPM tool, described earlier in this topic.

ACDB operation

The ACDB program lets you create and revise your access control database. Parameters stored in the database identify cardholders, schedules, and holidays, and assign access privileges.

The SDU includes a tool called the Resource Profile Manager (RPM). The RPM lets you create a resource profile for each company using the system for access control purposes. During setup of the ACDB program, you import the resource profile created by the RPM. This defines the system devices for the ACDB program.

The ACDB runs on your computer. You can connect the computer to the access control system in two ways:

- From an RS-232 port on the computer to an RS-232 port on the CPU
- From the computer modem to a 3-MODCOM via telephone lines

The end result is that the ACDB database can be downloaded from your computer to the system. Each CRC stores that portion of the database pertinent to its operation.

Locally defined unlock and open timers

Using the ACDB program, you can control how much time a cardholder has to enter or exit after badging in or pressing a request-to-exit button (REX). The CRC controls both the unlock time and door open time. Both can be set in the ACDB program.

Unlock timers control the number of seconds that the door stays unlocked after a cardholder badges in. When the unlock timer expires, the door locks. The ACDB has four unlock timers:

- Standard unlock
- Handicap unlock

- Manual unlock
- Minimum unlock

The CRC relay can be used to control a door opener. Door open timers control the number of seconds that the relay remains active. The ACDB has two door open timers:

- Manual open time
- Relay open time

Access control applications

The remaining topics in this chapter discuss specific access control applications. Each topic gives you an overview of the application, showing the components required and their interconnection.

Each topic includes a block diagram and general description of the application. Other factors (as called out on the drawings) are discussed under separate headings in the topic.

Anti-passback

Description of the application

Anti-passback is a feature of the access control system that prevents successive use of one card to pass through any door in the same direction. Anti-passback prevents a card from being passed back to another person for the purpose of gaining unauthorized access.

The CRC supports three forms of anti-passback:

- Strict
- Logged
- Timed

Strict anti-passback is the most restrictive form of anti-passback. It requires all personnel to badge in and out, denying them access to an area when they fail to do so.

Logged anti-passback is less restrictive than strict anti-passback. It still requires personnel to badge in and out but does not deny access when anti-passback rules are violated. Rather, such access is logged as an access granted anti-passback event. With logged anti-passback, security staff can work to correct violations, but personnel are not locked out.

Timed anti-passback prevents reuse of a card for a specific period, but does not require personnel to badge out. A timed anti-passback system automatically badges a cardholder out of the controlled partition after a specified time period, allowing the card to be used again.

Note: Timed anti-passback cannot be used with a muster application, since the system automatically logs cardholders out of the partition, defeating muster accounting.

To implement anti-passback, a separate CRC is required at each doorway in the controlled partition. Each doorway requires an outside card reader. Strict and logged anti-passback applications also require an inside reader at every doorway. Timed anti-passback does not require the use of an inside card reader.

A typical anti-passback application is shown in Figure 3-2, below.

The figure shows a building with a perimeter fence. It would be easy for an employee to pass his access card to an unauthorized individual through the fence, thereby allowing access. Configuring the access control system for anti-passback operation can help prevent this from happening.

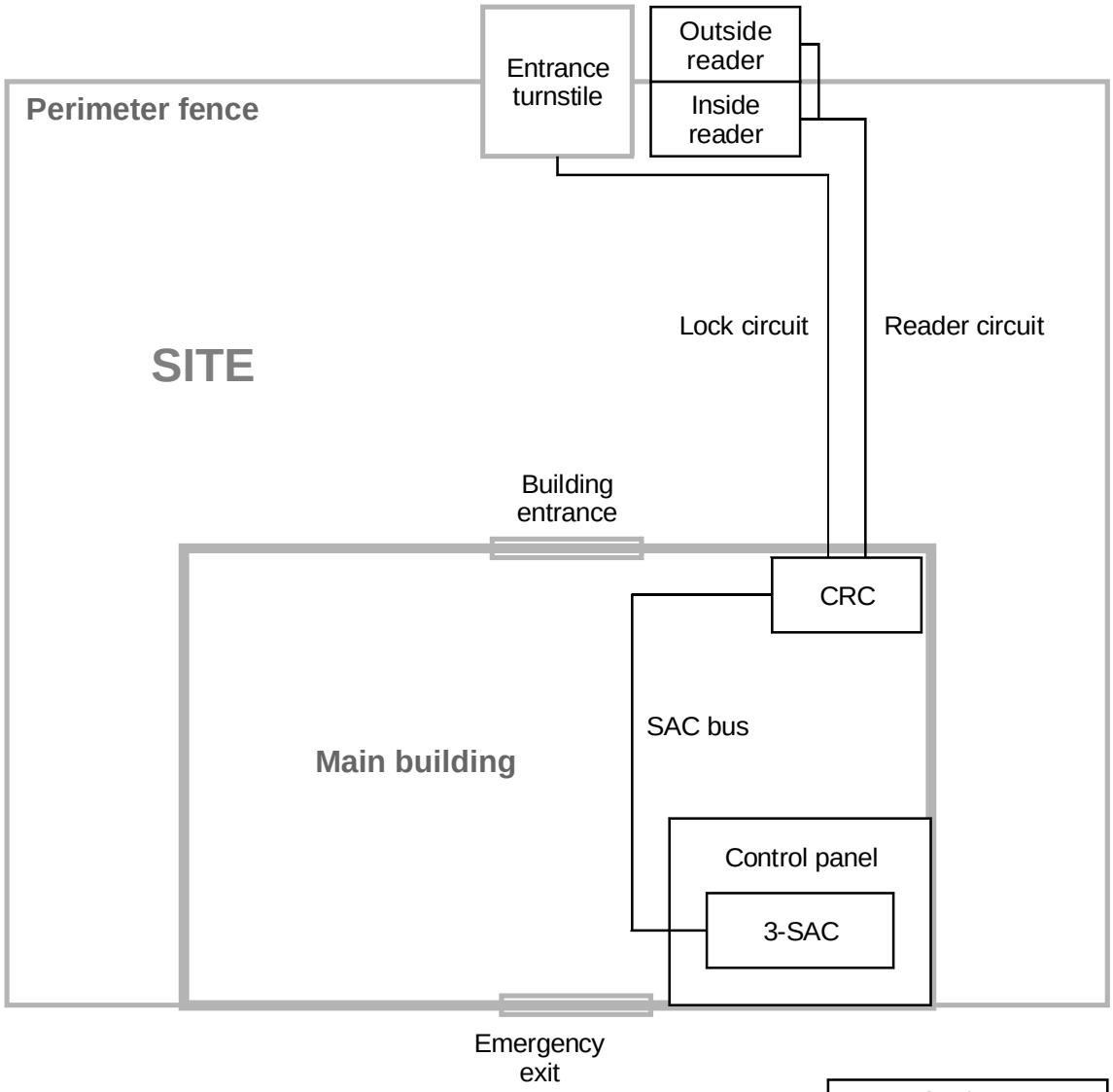

Other factors	
	Power supply
X	Hardware configuration
X	SDU programming
X	ACDB/KDC operation

Figure 3-2: Anti-passback

Hardware configuration

The control panel must contain a 3-SAC Security Access Control module. The 3-SAC module supports the SAC bus. Power for the CRC can be taken from the 3-PPS/M and routed with the data lines in a cable composed of two twisted-pair wires (the SAC bus).

SDU programming

If the CRC is to be used for anti-passback this must be configured using the SDU. The CRC configuration dialogs let you select the type of anti-passback you want to use:

- None
- Logged
- Timed
- Strict

You can also assign a predefined command list to various access granted or access denied events, including the anti-passback events:

- Access granted anti-passback
- Access denied anti-passback

The CPU runs the command list you specify when either of these events occurs.

ACDB programming

With timed anti-passback, the cardholder is automatically marked out after a specified period of time. This period is defined by the ACDB. The period can be set from 0 through 255 minutes (4 hours and 15 minutes).

Central monitoring station

Description of the application

An access control system can transmit different kinds of event information to a central monitoring station (CMS). The basics for such a system are shown in Figure 3-3.

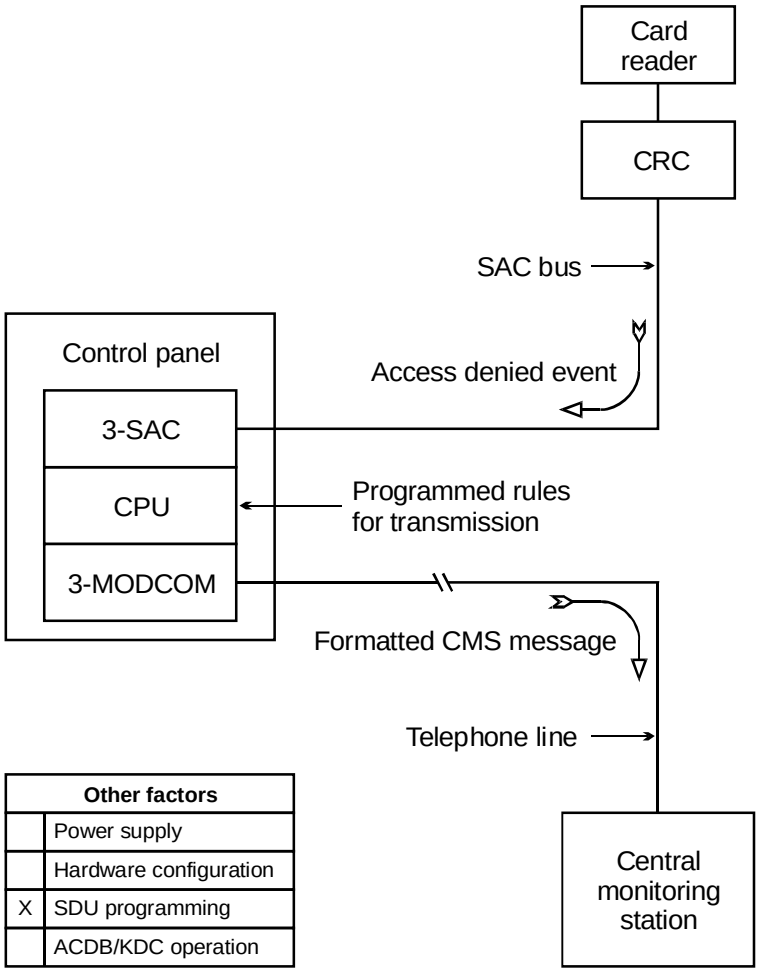

Other factors	
	Power supply
	Hardware configuration
X	SDU programming
	ACDB/KDC operation

Figure 3-3: Access control reporting to a central monitoring station

When a reportable access event occurs, the event message travels from the CRC to the 3-SAC. The 3-SAC passes the message to the CPU which executes a predefined command list. The command list specifies the details of the message that is sent to the 3-MODCOM for transmission to the CMS.

SDU programming

Reporting access control events to a CMS depends entirely on programming and the creation of command lists. In essence, you must assign a command list to each CRC event you want to report. The command list contains the details of the message to be transmitted.

The following CRC events can be assigned command events:

- Access granted
- Access granted irregular
- Access granted anti-passback
- Access granted muster
- Access denied unknown
- Access denied reader disabled
- Access denied access level not active
- Access denied outside schedule 1
- Access denied outside schedule 2
- Access denied partition armed
- Access denied PIN not entered
- Access denied PIN not valid
- Access denied two-person timeout
- Access denied anti-passback
- Access denied escort

Common door access

Description of the application

A site that makes use of a common door is shown in Figure 3-4. Here, the door is the main entrance of an office building, and leads into a common lobby area. Within the building, two companies rent offices, each with controlled access doors.

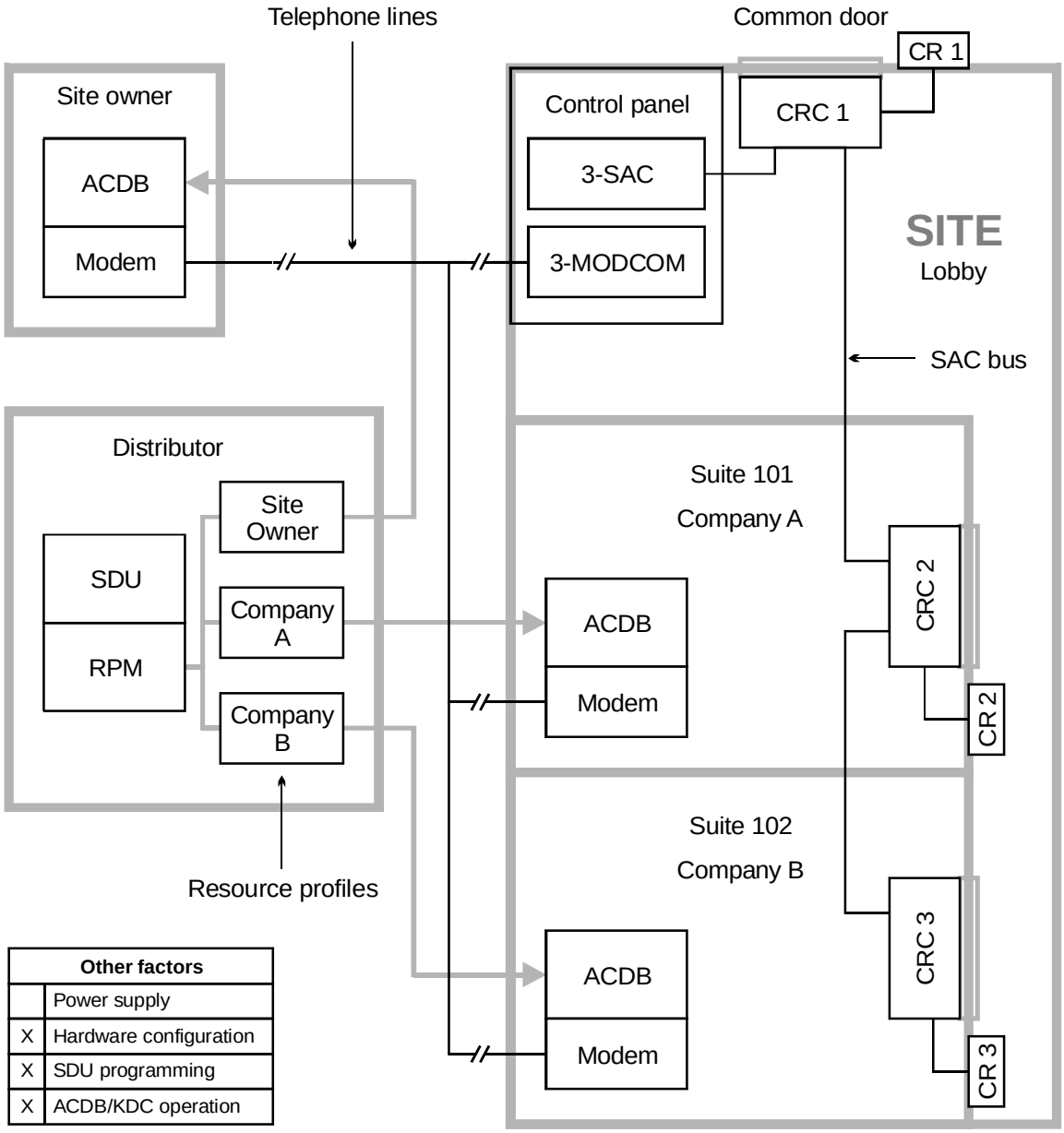

Figure 3-4: Common door in a lobby area

Hardware configuration

The site has an EST3 control panel that includes a 3-SAC and a 3-MODCOM module. The 3-SAC supports the SAC bus. The 3-MODCOM module supports modem communication with the control panel over telephone lines.

SDU programming

As the distributor, you use the SDU to program the control panel for this application. Part of the programming job is to use the Resource Profile Manager (RPM) to create resource profiles for the site owner and for each tenant company.

Resource profiles are imported into the Access Control Database (ACDB) program. They determine which devices the user can see and program. Resource profiles also establish transmission routes that permit modem communication with the EST3 panel.

When a device is shared, the RPM lets you specify how much of the device is allocated to each company. You can allocate resources either by percentages or by actual numbers.

It’s a good idea to hold some allocation in reserve, giving each company only what it needs. It is much easier to allocate additional resources as needed than to reclaim resources that are already allocated.

In our example, the resource profile for company A would contain CRC 1 (the lobby door) and CRC 2 (the suite 101 door). For Company A, you might choose to allocate 80% of CRC 2, and 20% of CRC 1.

Similarly, the resource profile for company B would allocate 80% of CRC 3 and another 20% of CRC 1.

The site owner will need access to the CRC2 and CRC3 doors for cleaning or inspection purposes. The site owner resource profile could allocate 20% of CRC 1, 10 % of CRC 2, and 10% of CRC 3.

This leaves 40% of CRC 1 unallocated, and 10% of CRC 2 and CRC 3 unallocated. The unallocated resources are reserved for future expansion or changes.

ACDB operation

The site owner, the owner of company A, and the owner of company B, can all use telephone lines to communicate with the control panel via the 3-MODCOM module. They can download additions and changes to the CRCs, and upload usage data for various ACDB reports.

Delayed egress

Description of the application

Delayed egress doors help to control shoplifting at retail sites. A delayed egress door has card readers and a request to exit (REX) switch. Employees can badge in and out as they would at any other door. In an emergency, customers must press the REX switch to unlock the door.

When the REX switch is activated, the CRC sounds the CRCSND horn and sends a security alarm event to the panel. It does not unlock the door immediately, thus allowing site staff time to investigate.

The CRC waits for a specific interval of time before unlocking the door. The typical delay time is 15 seconds; however, you may be able to use a delay of up to 30 seconds with the approval of the AHJ. The horn continues to sound for a specific period of time, or until the CRC is reset.

After the delay time passes, the CRC unlocks the door, and latches it in the unlocked state. The CRC must be reset in order to relock the door and silence the horn. To reset the CRC, site staff must use a valid badge at the card reader.

The CRC also activates the CRCSND horn if the door is opened without badging. For example, if the door is forced open from the outside, the CRCSND activates, even though the REX switch has not been pressed.

Many codes require that delayed egress doors unlock during a fire alarm, or when the panel is in trouble. This requirement allows occupants to evacuate the site immediately when a fire is detected, or when the panel loses its ability to detect a fire or sound the alarm.

Figure 3-5 shows a delayed egress door with inside and outside card readers and a request to exit switch. The CRC uses a door contact switch to determine the position of the door, and a maglock to lock the door. The door contact switch and REX switch are connected to the input loops of the CRC.

Note: Refer to NFPA 101 and the local AHJ to determine the requirements for delayed egress applications.

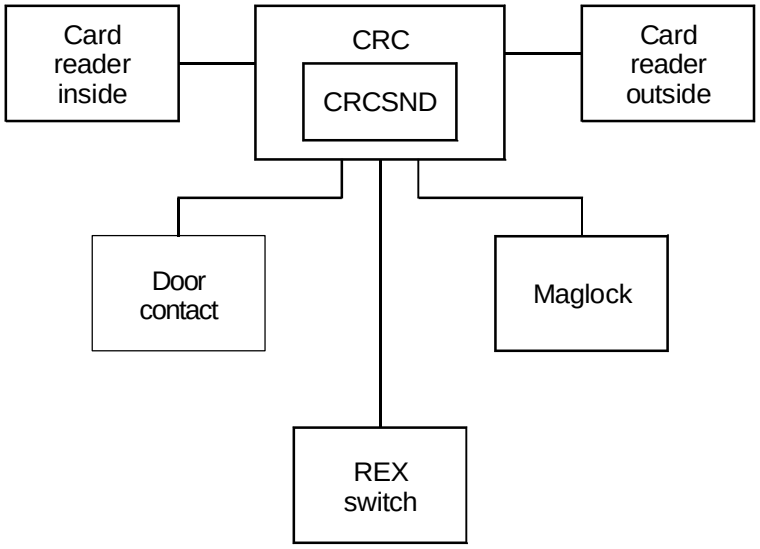

Other factors	
	Power supply
X	Hardware configuration
X	SDU programming
X	ACDB/KDC operation

Figure 3-5: Delayed egress doorway

Hardware configuration

A maglock is most commonly used for delayed egress applications, but you can use any locking device that has no manual override. For example, a strike with no knob could be used.

The door contact is used to detect unauthorized opening of the door. The CRC activates the CRCSND and reports a security alarm event when the door is opened without badging or use of the REX.

The door contact signal is also required to relock the door when the CRC is reset. The lock cannot be reset until the door is closed.

SDU programming

Most codes require you to program rules that unlock the door when the panel goes into alarm or when the panel goes into trouble.

When configuring the CRC, set the Delayed Egress Time field to the value (in seconds) you want to use. Define the input loops as follows.

For the door contact input loop:

- Device Type = Security P Monitor
- Input Circuit Partition = as determined by project
- Max Delta Count = as determined by project
- Delays = None
- Application = Emergency Exit Door Contact
- Personality = Basic

For the request to exit switch:

- Device Type = Monitor
- Input Circuit Partition = None
- Max Delta Count = not applicable
- Delays = None
- Application = Request to Exit with Delayed Egress
- Personality = N.O. with Trouble

ACDB operation

When an employee badges in or out at the door, the CRC bypasses the door contact for a specified period of time. This is called the Bypass Time, and is specified in the ACDB.

The duration of the CRCSND horn is also specified in the ACDB, as the Emergency Exit Sounder Time. This can be set to any value between 0 and 255 seconds.

Setting the value to 0 seconds effectively inhibits the CRCSND. Setting the value to 255 seconds programs the CRC to operate the CRCSND until the CRC is manually reset by badging at the CRC card reader.

Elevator control

Description of the application

An access control system can determine which floors are available to a given cardholder. This application is shown in Figure 3-6.

A CRC and independent power source are installed in the elevator cab. When a cardholder presents his card it is processed by the CRC. If valid, the CRC sends an access granted event and a command list request to the CPU via the 3-SAC.

The command list operates the Signature relay modules attached to the Signature Controller module. The relays are connected to the elevator controller, and turn on or off access to the correct floors, according to the cardholder's access level privileges.

The command list includes timing, so the cardholder has a limited window of opportunity during which he can press the desired floor button. After the time has lapsed, he must present his card again.

Note: This application must be used only for floor access, and *not* for elevator control.

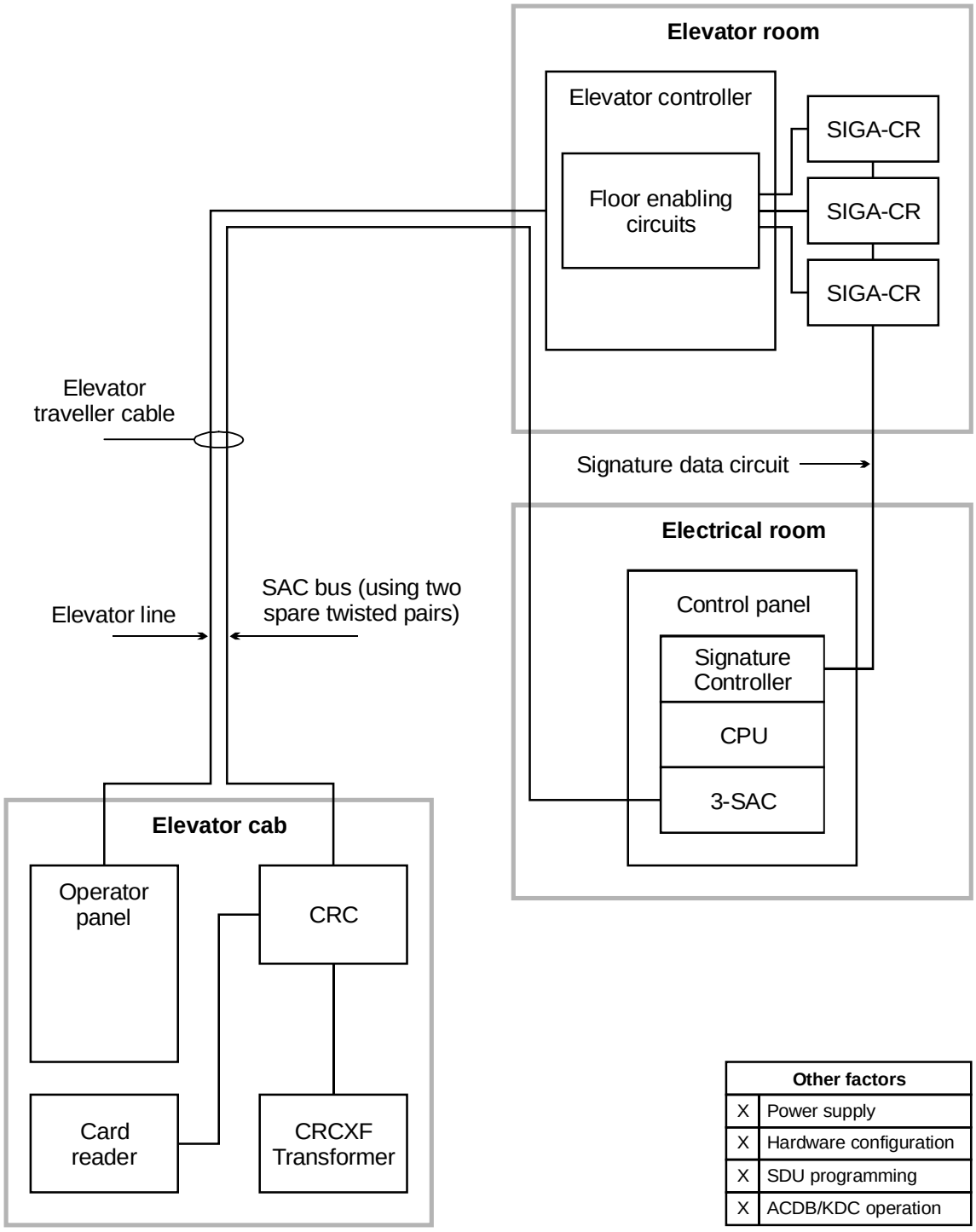

Other factors	
X	Power supply
X	Hardware configuration
X	SDU programming
X	ACDB/KDC operation

Figure 3-6: Access control and elevators

Power supply

The figure shows an independent power source for the CRC. This is suggested due to the length of cable from the cab to the electrical room.

Two pairs of wires are used to connect the CRC to the control panel. The SAC bus requires one pair for data communication. One wire of the second pair is required to maintain a common ground between the control panel and the CRC. For details, refer to the topic “Power from an AC source,” later in this chapter.

If you use an additional power supply other than the CRCXF, that power supply must be listed for fire alarm applications, must have ground fault detection disabled, and must have a circuit ground (circuit common) that is isolated from earth ground.

Hardware configuration

In this application, none of the CRC input circuits or relay contacts are used. The CRC simply reads the card and passes the command list request to the 3-SAC and CPU for processing.

Since the CRC lock and input circuits are not used, you must provide dummy loads to maintain correct supervision currents. See the installation sheet for the correct load values.

SDU programming

The SDU programmer must create a command list for each combination of floors desired.

ACDB operation

The site security officer determines which floors should be accessible for an access level, and assigns the correct command list to the access granted event for that level. The site security officer also determines which cardholders belong to each access level.

Emergency exit door

Description of the application

An *emergency exit door* is a door that is unlocked from the inside either by badging out or by opening the door.

If the door is opened without badging out, it causes an immediate alarm. Badging out bypasses the door for a specific period of time, so no alarm event occurs.

A typical CRC application for emergency exit door is shown in Figure 3-7 below.

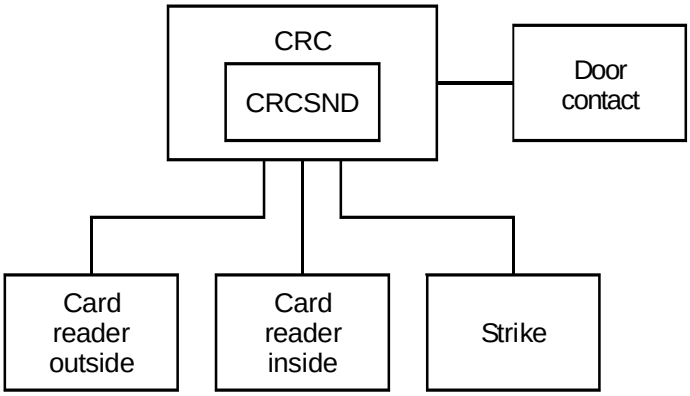

Other factors	
	Power supply
X	Hardware configuration
X	SDU programming
X	ACDB/KDC operation

Figure 3-7: Emergency exit door

Note: Refer to NFPA 101 and the local AHJ to determine the requirements for emergency exit applications.

Hardware configuration

A CRC used for an emergency exit door requires the following additional hardware:

- CRCSND CRC Sounder
- Door contact

The CRCSND is installed inside the CRC. The sounder provides a local sound alarm. Opening the door without badging out activates the CRCSND.

The door contact is connected to the CRC via the input circuit.

SDU programming

In the SDU, you'll need to define the input circuit for the door contact as follows:

- Device type: Security P Monitor
- Delays: None
- Application: Door Contact
- Personality: Basic

ACDB operation

Two time periods are defined in the ACDB: Emergency Exit Sounder Time, and Bypass Time.

Emergency Exit Sounder Time is the number of seconds (0 through 255) the CRC Sounder sounds when an emergency exit door is opened without badging out.

When set to zero, the sounder is disabled. When set to 255, the sounder sounds until manually reset. The sounder is reset when a cardholder badges in at the door.

In all cases badging in on the affected CRC can silence the sounder.

Bypass Time is the number of seconds (0 through 255) that the door is bypassed after a cardholder badges out.

Handicap access door

Description of application

A *handicap access door* is a door that helps a handicapped person enter and exit a door by allowing extra access time and providing an automatic door opener. See Figure 3-8, below.

The door can function for both normal access and handicap access. A person without handicap privileges would operate the door just as any other door.

When a person with handicap privileges badges in, the CRC recognizes that the person has handicap privileges and provides two extra benefits. The first is giving the handicap person extra time to enter or exit the doorway before relocking the door. The second is an automatic door opener.

A second card reader can be installed in parallel to the entry or exit card reader to make it easier for a handicapped person to reach. The second card reader should be placed at a lower level and farther away from the door. The distance from the door should allow the automatic door to open fully without a person needing to move backwards.

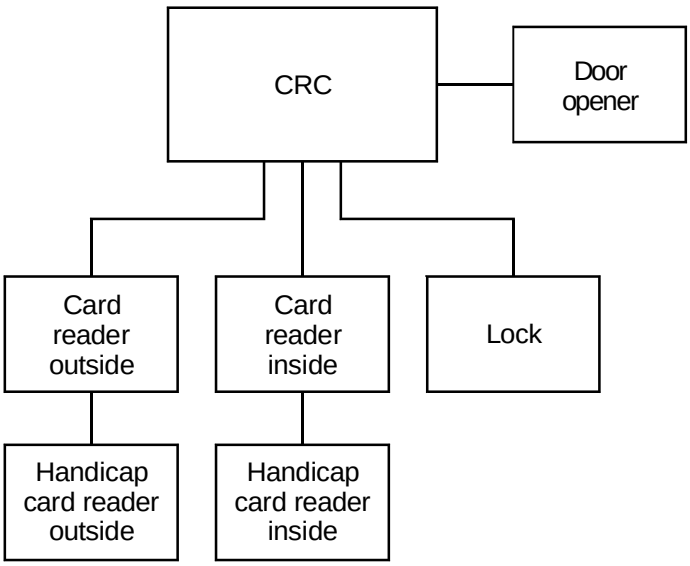

Other factors	
	Power supply
X	Hardware configuration
X	SDU programming
X	ACDB/KDC operation

Figure 3-8: Handicap access door

Note: Refer to the appropriate ADA codes and the local AHJ to determine the requirements for handicap access door applications.

Hardware configuration

A CRC used for a handicap access door may require the following additional hardware:

- Automatic door opener
- Additional card readers

The automatic door opener is installed directly to the access door. The CRC controls the opening of the door with its internal relay.

Caution: The CRC relay is for low-voltage only. Do not exceed the relay limits stated on the installation sheet.

The additional card readers are wired to the standard card readers in parallel.

SDU programming

In the SDU, you'll need to define the CRC relay device type as Access Door Control. This will activate the door opener for the time specified by the ACDB.

ACDB operation

The relay open time needs to be defined in the ACDB. This is the number of seconds (0 through 255) that the CRC will activate the relay that automatically opens the door. The default is 30 seconds.

The handicap unlock time also needs to be defined in the ACDB. This is the number of seconds (0 through 255) that the lock will stay unlocked. The default is 20 seconds The door will relock when the unlock time has expired and the door has closed.

Both of these times can be set to allow a longer access time for a handicapped person.

Maglock peripherals

Description of the application

Maglocks require *maglock peripherals* due to NFPA codes. In general, these devices are intended to ensure that an egress door secured with a maglock can always be opened in an emergency.

Figure 3-9 shows the CRC using a maglock and required peripherals.

Maglock application requires a passive infrared motion detector (PIR) to be mounted above the door. Also required is a request to exit (REX) switch to be mounted within five feet of the door and 40 to 48 inches above the ground. The PIR is connected on the input circuit of the CRC. The REX is connected directly to the maglock so that when activated it unlocks the door independently of the CRC.

The CRC is designed so that on detection of a fault on the input circuit of the PIR, the door will unlock. The PIR detects an approaching body and unlocks the door. Similarly, the REX switch unlocks the door when it is pressed. The REX switch must unlock the door for a minimum of 30 seconds.

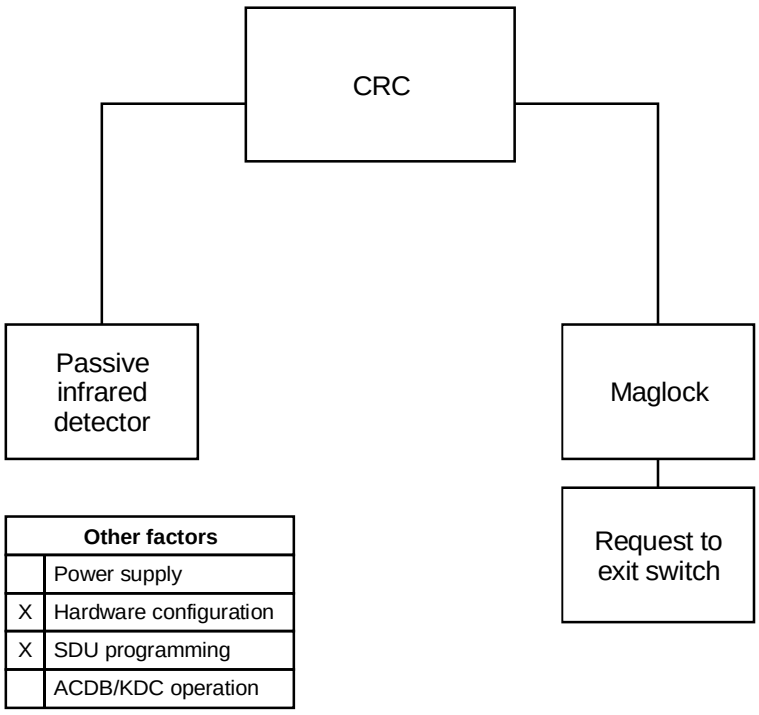

Other factors	
	Power supply
X	Hardware configuration
X	SDU programming
	ACDB/KDC operation

Figure 3-9: Maglock and peripherals

Hardware configuration

The maglock peripherals consist of the following:

- Passive infrared motion detector (PIR)
- Request to exit (REX) switch

The PIR is connected via the CRC input circuit. The REX is connected directly to the maglock instead of the CRC input circuit to meet NFPA requirements.

SDU programming

When programming the system for this application you'll need to configure the CRC, defining the device type. You'll also need to define the input circuits. For this application define the input circuit for the PIR as follows:

- Device type = Security interior
- Application = Request to exit motion detector.

Multiple card readers

Description of the application

Several access control applications require the use of multiple card readers. For example:

- Visitor and escort readers
- High and low position readers

The CRC lets you use multiple card readers of the same technology or of mixed technologies. It can support up to four card readers, provided that the total current draw of the readers does not exceed the limits specified on the CRC installation sheet.

A visitor and escort application using multiple card readers is shown in Figure 3-10, below. In this application, both the escort and visitor must badge in to gain access.

The escort has a permanent, plastic card, and uses the proximity card reader. The visitor is issued an inexpensive paper bar code card, and uses the bar code reader.

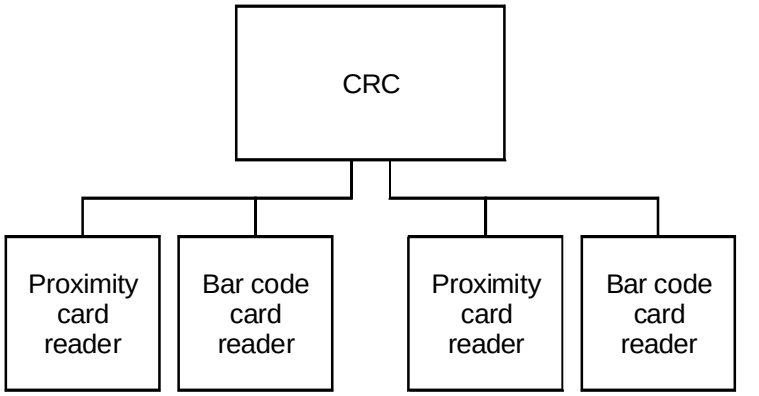

	Other factors
	Power supply
X	Hardware configuration
X	SDU programming
X	ACDB/KDC operation

Figure 3-10: Multiple card readers

Card reader

This application works best with card readers that support dual LED control. The CRC uses the second LED (or LED state) to signal the visitor that the escort must badge in before access is granted.

Hardware configuration

The proximity card reader and barcode card reader are connected to the same terminals of the CRC.

SDU programming

When an escorted visitor tries to enter a controlled area without an employee, the CRC generates an access denied escort event. You can select a predefined command list that the CPU executes in response to this event.

ACDB operation

Like employees, visitors must be assigned an access level using the ACDB. The site security officer can elect to assign the same access level to all visitor cards, or assign different access levels to ranges of visitor cards.

Muster

Description of the application

The *muster* application can be used to determine who has exited the building in the event of an evacuation.

During normal operations, staff badge in and out using the inside and outside readers. Note that muster reporting will only work if all employees badge in and out.

During an evacuation, everyone exits the building immediately and goes to one of the predetermined muster stations. At the muster station personnel badge in using a reader that is attached to a CRC designated as a muster station.

After everyone has badged in at the muster station security staff use the ACDB program to create a muster report. The report lists staff who badged into the building but did not badge out at a muster station.

Figure 3-11 shows a typical muster application. CRCs 2, 3, 5, and 6 are normal access control CRCs. CRCs 1 and 4 are muster station CRCs.

The ACDB computer must be located in a safe area so security staff can create the muster report after the evacuation. This computer can connect to the access control system either via telephone lines and a 3-MODCOM, or by direct connection to the EST3 control panel.

Note: Links between the ACDB computer and the control panel should be tested regularly to ensure correct operation.

Staff must be made aware of the importance of badging in and out at all times. Failure to do so can result in a false muster report, indicating that someone is still in the building. This in turn can result in rescue personnel risking danger to search for someone who is not actually in the building.

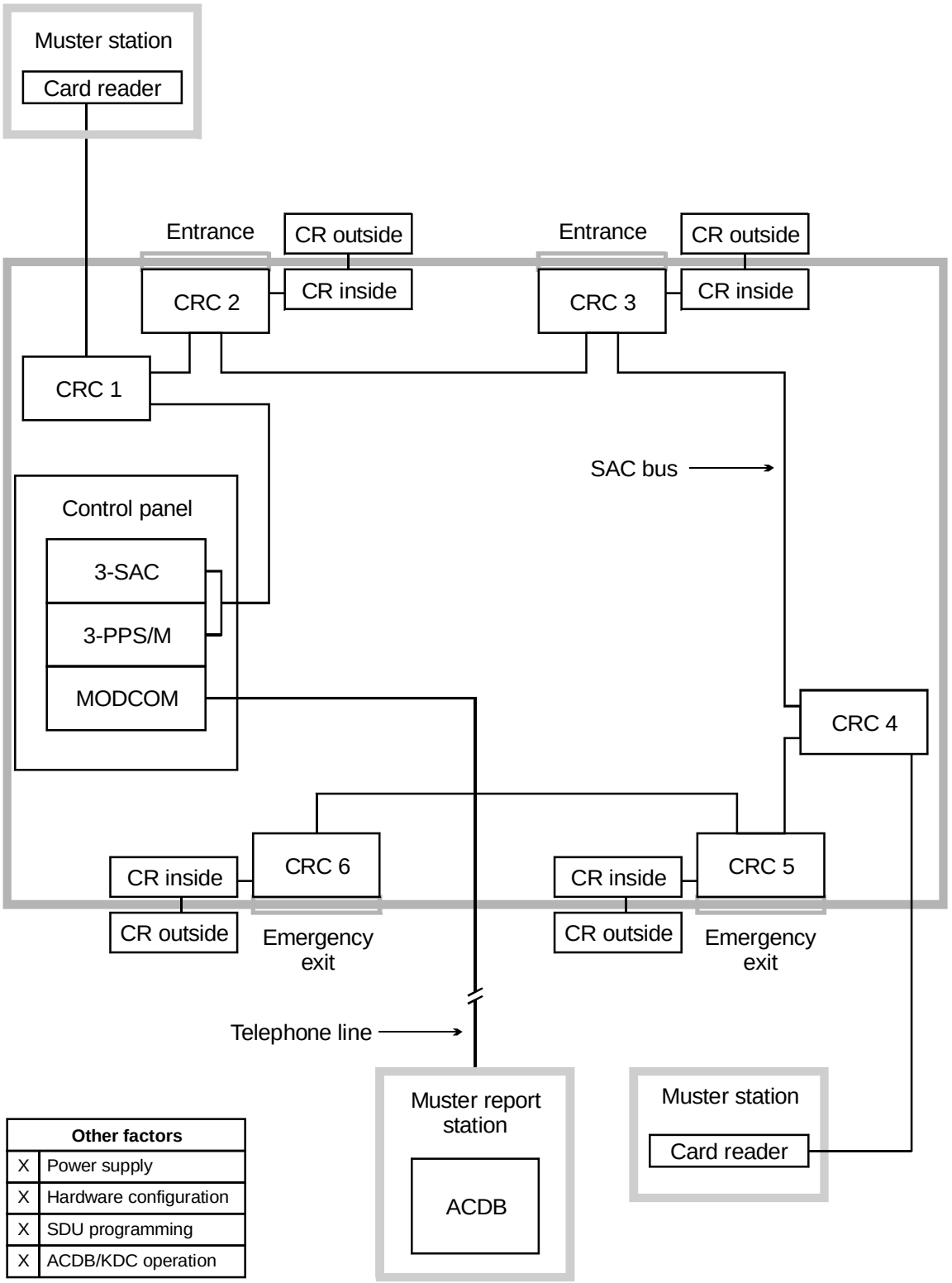

Other factors	
X	Power supply
X	Hardware configuration
X	SDU programming
X	ACDB/KDC operation

Figure 3-11: Muster application

Hardware configuration

The control panel must contain the following rail modules:

- 3-SAC Security Access Control module
- 3-PPS/M Primary Power Supply module
- 3-MODCOM Modem Communication module
  —or—
  3-RS232 Card option installed in the CPU

The 3-SAC module supports the SAC bus. Power for the CRC is normally taken from the 3-PPS/M and is routed with the data lines in a cable composed of two twisted-pair wires.

The 3-MODCOM module supports modem communication between the control panel and the ACDB program via telephone lines. Alternately, the 3-RS232 Card supports RS-232 communications on a cable connected directly to the CPU.

All CRCs controlled by a muster station must be on the same 3-SAC card as the muster station. Badging out at a muster station badges the person out of all partitions for that 3-SAC card. Therefore, a single muster station can serve multiple partitions, provided that they are on the same 3-SAC card.

The system must have at least one muster CRC per 3-SAC module. The system cannot exchange muster information between 3-SAC modules, so each must be handled separately for muster purposes.

A CRC used for a muster station requires the specified dummy load on the lock terminals to maintain supervision. (Refer to the CRC installation sheet for correct resistor values.)

The card reader used for the muster station must be wired as an outside reader.

SDU programming

Each CRC used in a muster application requires specific configuration settings. These are made in the SDU program, on the CRC Configuration tab.

If the CRC is used in a partition that has muster control, check the Muster Support box.

For the CRC designated as the muster station, check the Muster Station box, but leave the Muster Support box clear.

In the SDU, you can also assign a predefined command list to the Access Granted Muster event.

Power for continuous locks

Description of the application

By *continuous locks*, we mean locks that operate, on average, more than 30 seconds in every minute. Normally, power for the lock is taken from the CRC battery. However, for continuous locks there is not enough recharge time for the CRC battery to keep up with the drain. Consequently, the CRC must be configured so that an external power supply operates the lock.

The CRC can be powered by the 3-PPS/M, by a CRCXF (CRC Transformer), or by a remote 24 Vdc power supply. Any of these supplies is suitable for powering continuous locks. (See the topics “Power from an AC source” and “Power from a remote source” for more information about these options.)

A typical application using continuous locks is shown in Figure 3-12, below.

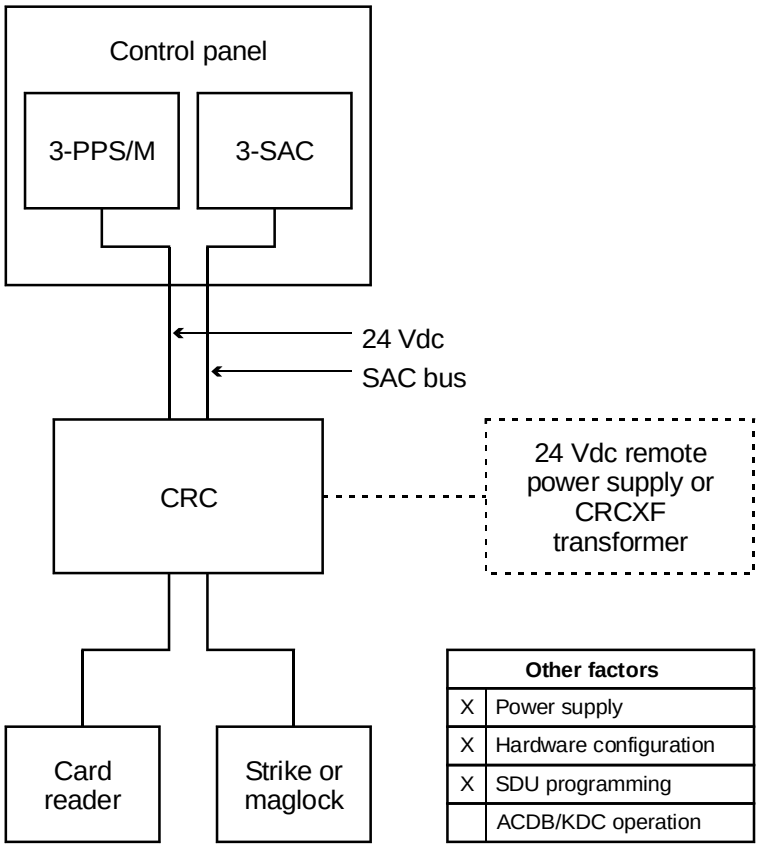

Figure 3-12: CRC controlling a continuous lock

The figure shows the power coming from the 3-PPS/M in the control panel. This power supply could be used to operate the

lock, but use of a CRCXF or remote 24 Vdc supply is recommended to minimize the load on the panel power supply.

During open schedules, or when an authorized card is read at a card reader, the CRC provides power from the 3-PPS/M to the door strike to unlock the door. For maglocks, the CRC provides power from the 3-PPS/M (or CRCXF or 24 Vdc power supply) to activate the lock during closed schedules, or between authorized card accesses.

Power supply

Use power and load calculations to determine the need for remote power supplies or transformers. Refer to *the CRC Technical Reference Manual* for calculation guidelines.

Jumper settings determine the power source and usage for the CRC. Refer to the installation sheet for correct jumper settings. Configure the input power as DC when using power from the control panel or a remote supply. Configure input power as AC when using a transformer.

For this application, configure the output power as continuous.

Hardware configuration

The control panel must contain the following rail modules:

- 3-SAC Security Access Control module
- 3-PPS/M Primary Power Supply module

The 3-SAC module supports the SAC bus. Power for the CRC is taken from the 3-PPS/M and is routed with the data lines in a cable composed of two twisted-pair wires.

SDU programming

When configuring the system for this application, you'll need to configure the CRC and define the appropriate lock type in the SDU. For this application the Lock Type can be either Strike or Maglock as required to match the lock actually used.

Power for intermittent locks

Description of the application

By *intermittent locks*, we mean locks that operate, on average, less than 30 seconds in every minute. In these applications, the CRC battery can provide the power needed to operate the lock.

The CRC can be powered by the 3-PPS/M. It uses this power source to charge an internal 1.2 Ah sealed lead acid battery. The battery then provides the power needed to operate the door lock.

Because the battery powers the door strike, this configuration cannot be used for maglocks or strikes that are active more than 30 seconds in a minute. In these conditions the battery would not have enough time to charge and keep up with the drain. For heavy or continuous duty applications, refer to the topic *Power for continuous locks* presented in this chapter.

A typical application using CRC battery power is shown in Figure 3-13, below.

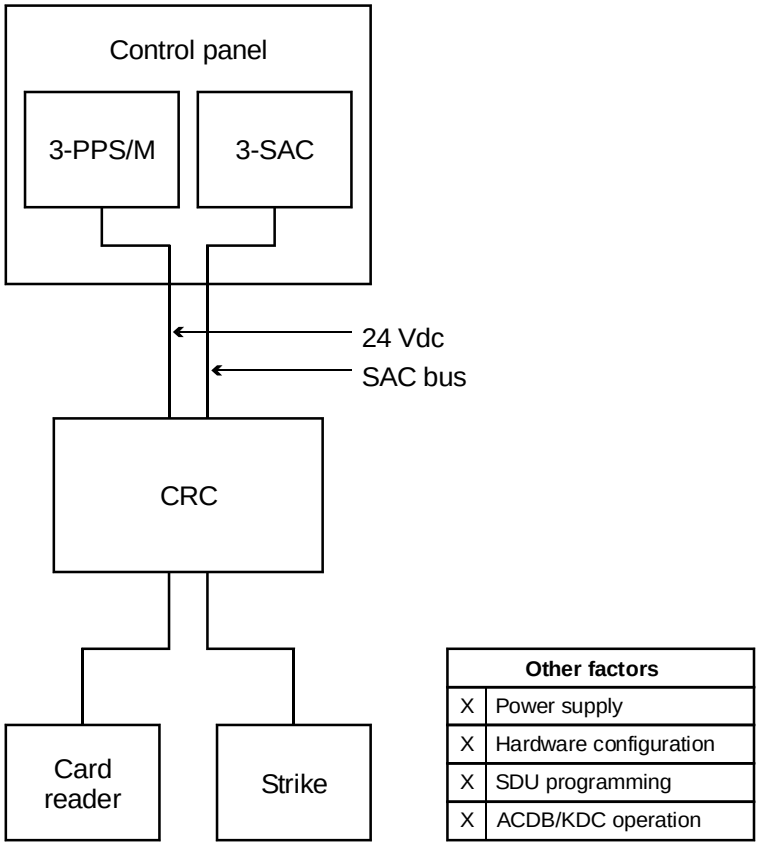

Figure 3-13: CRC controlling an intermittent strike

The figure shows the charging power coming from the 3-PPS/M in the control panel. The access control system requires a 24 Vdc power supply to power the CRC and to charge its battery. The 3-SAC connects to the CRC through the SAC bus.

When an authorized card is read at a card reader, the CRC provides power from its internal battery to the door strike and unlocks the door.

Power supply

Jumper settings determine the power source and usage for the CRC. Refer to the installation sheet for correct jumper settings. Configure the input power as DC. Configure the output power as intermittent.

Hardware configuration

The control panel must contain the following rail modules:

- 3-SAC Security Access Control module
- 3-PPS/M Primary Power Supply module

The 3-SAC module supports the SAC bus. Power for the CRC is taken from the 3-PPS/M and is routed with the data lines in a cable composed of two twisted-pair wires.

SDU programming

When configuring the system for this application, you'll need to configure the CRC and define the appropriate lock type in the SDU. For this application set the Lock Type to Strike.

ACDB operation

Note that a CRC configured and programmed for intermittent lock use cannot support an open schedule (a period when the lock is kept open). Such a schedule would quickly drain the CRC battery and the lock would close.

You should document the CRC configuration and include this in your project plans. Make a copy of this documentation available to the site security staff who will use the ADCB to create and assign schedules.

Power from an AC source

Description of the application

By AC *power*, we mean that the CRC provides the power to operate the electric door strike or maglock by using a 16.5 Vac transformer (model CRCXF). This supply can provide continuous power to the door strike or maglock, and also power the CRC.

Using an AC source:

- Limits power drawn from the control panel
- Supports continuous duty locks
- Supports schedules with unlock periods

Note: Be sure to check the installation sheet for the *CRC and CRCXM—Card Reader Controller Installation Sheet* (P/N 387625) for a list of applications that prohibit the use of the CRCXF.

A typical CRC using AC power is shown in Figure 3-14.

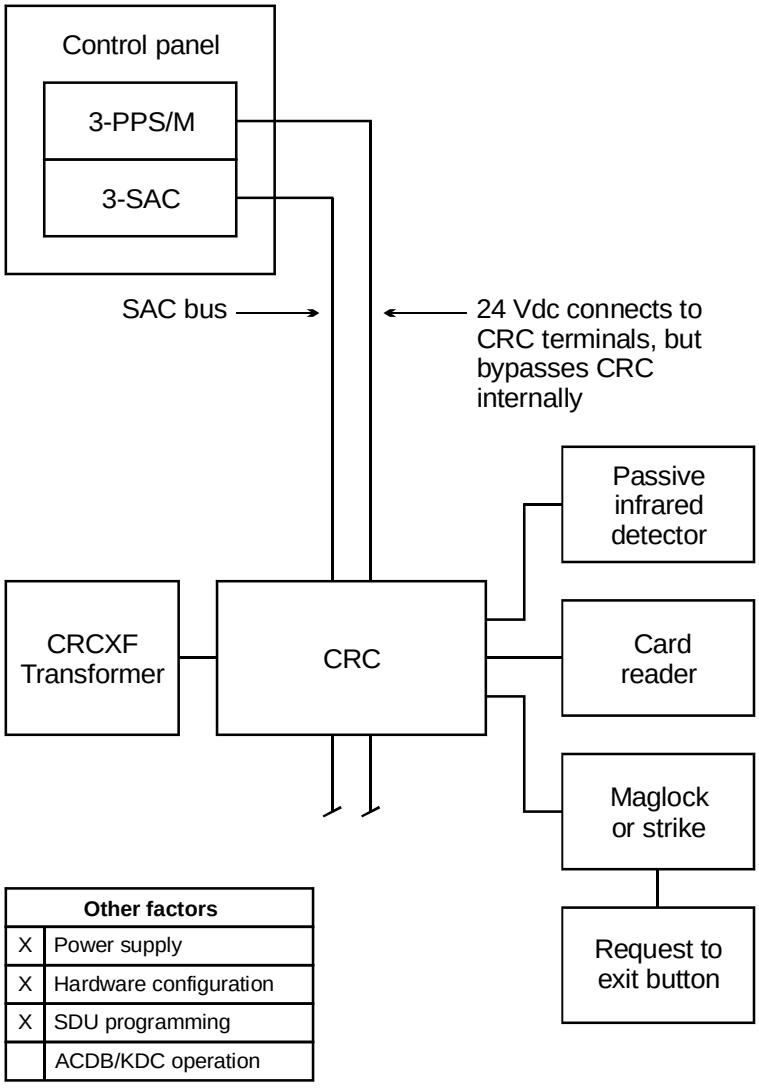

Other factors	
X	Power supply
X	Hardware configuration
X	SDU programming
	ACDB/KDC operation

Figure 3-14: CRC using AC power

The figure above shows the CRC power coming from the 16.5 Vac transformer. The 3-PPS/M power supply coming from the control panel simply passes through the CRC. The 3-SAC connects to the CRC through the SAC bus.

This wiring is shown in Figure 3-15.

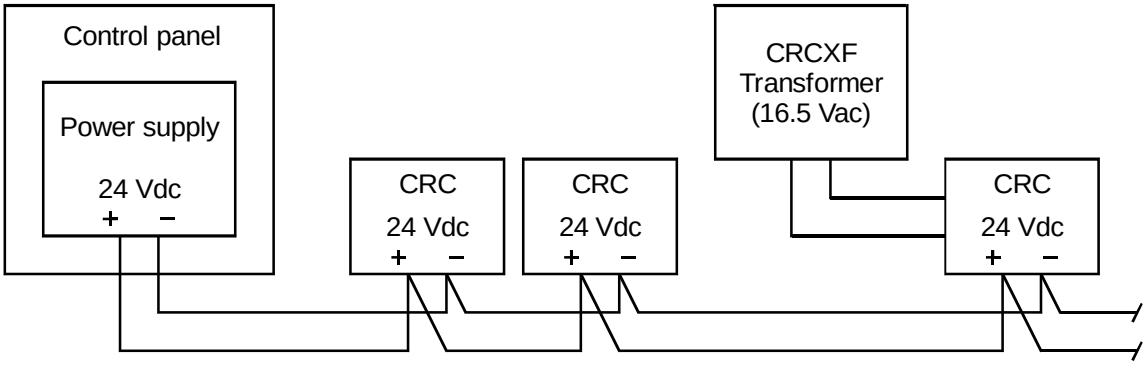

Figure 3-15: Wiring details for transformer supply

Power supply

Jumper settings determine the power source and usage for the CRC. Configure the input power as AC. Configure the output power as continuous.

If you use an additional power supply other than the CRCXF, that power supply must be listed for fire alarm applications, must have ground fault detection disabled, and must have a circuit ground (circuit common) that is isolated from earth ground.

Hardware configuration

The control panel must contain the following rail modules:

- 3-SAC Security Access Control module
- 3-PPS/M Primary Power Supply module

The 3-SAC module supports the SAC bus. Power for the CRC is normally taken from the 3-PPS/M and is routed with the data lines in a cable composed of two twisted-pair wires. In this case the power from the 3-PPS/M is connected to the CRC terminals, but internally bypassed.

The 16.5 Vac transformer should be plugged into a continuously energized AC socket, not one controlled by a switch.

SDU programming

When programming the system for this application, you'll need to configure the CRC and define the appropriate lock type in the SDU. This can be either a strike or maglock.

Power from a remote source

Description of the application

By *remote power*, we mean that the CRC provides the power to operate the electronic door strike or maglock by using a remote DC power supply. This additional power can provide continuous power to the door strike or maglock.

A typical CRC using remote power is shown in Figure 3-16. The additional power is needed because the CRC battery cannot keep up with the power needs of maglocks or strikes with an active duty cycle greater than 30 seconds in a minute. In these conditions the battery does not have enough time to charge and keep up with the drain.

The figure shows power coming from the additional remote power supply to power the CRC and maglock. The supply is supervised by the Signature data circuit derived from the 3-SSDC(1) module. The 3-SAC connects to the CRC through the SAC bus.

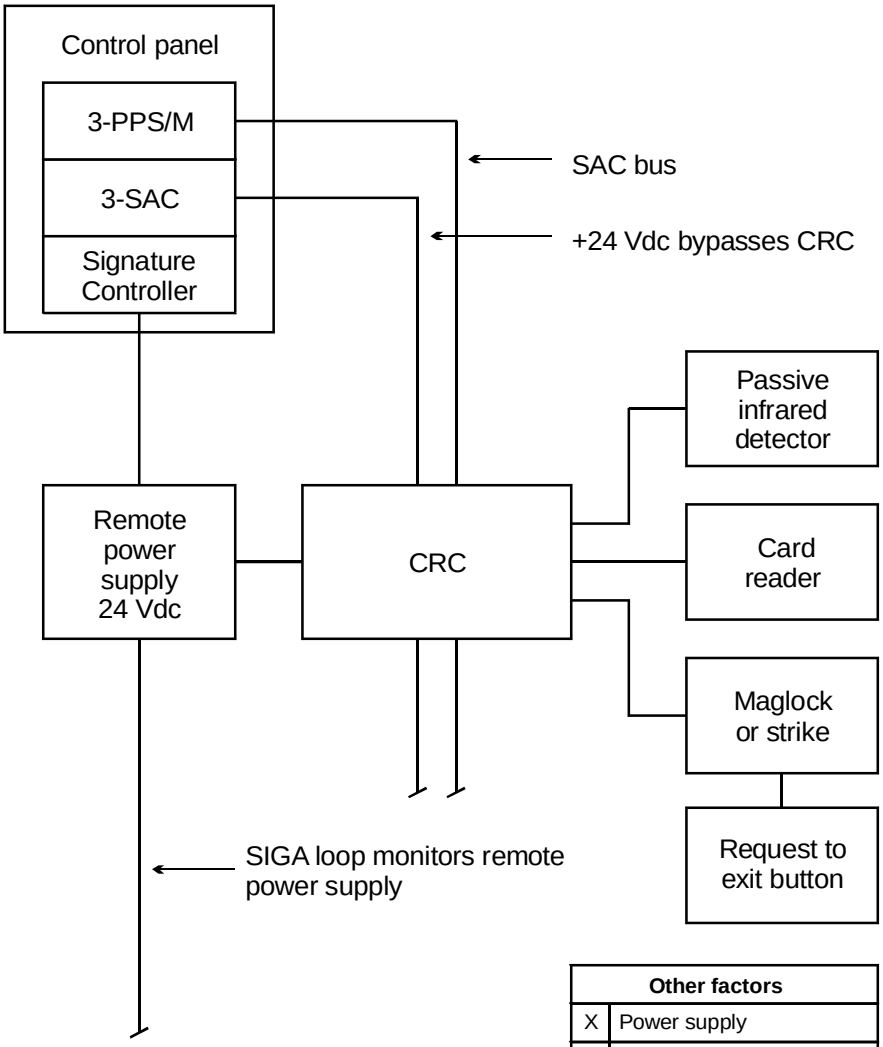

Figure 3-16: CRC using remote power

The negative side of the 3-PPS/M power supply coming from the control panel connects to the CRC (and to all other CRCs). The positive side is broken and the remote power supply picks up the load. This wiring is shown in Figure 3-17.

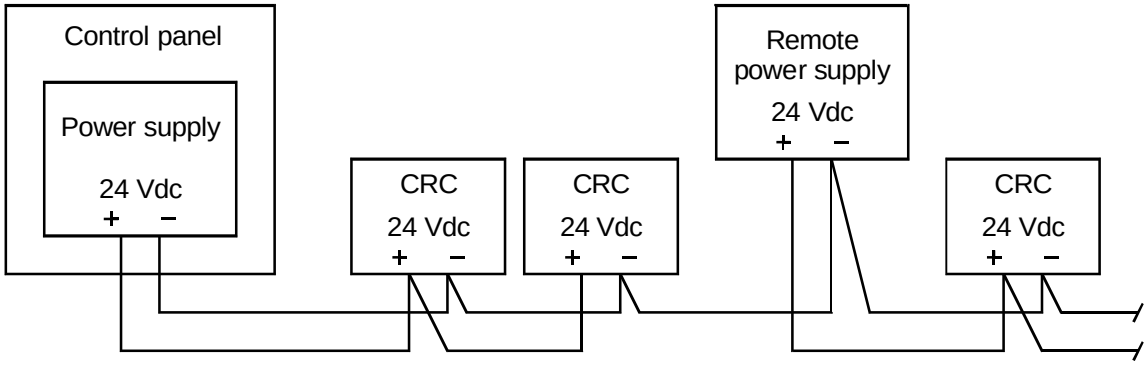

Figure 3-17: Wiring for remote power supply

Power supply

Jumper settings determine the power source and usage for the CRC. Configure the input power as DC. Configure the output power as continuous.

Note that additional power supplies must be listed for fire alarm applications, must have ground fault detection disabled, and must have a circuit ground that is isolated from earth ground.

Hardware configuration

The control panel must contain the following rail modules:

- 3-SSDC(1) Single Signature Controller module
- 3-SAC Security Access Control module
- 3-PPS/M Primary Power Supply module

The 3-SSDC(1) module supports the SIGA loop, which supervises the remote power supply

The 3-SAC module supports the SAC bus. Power for the CRC is normally taken from the 3-PPS/M and is routed with the data lines in a cable composed of two twisted-pair wires. In this case the power from the 3-PPS/M is simply passed through the CRC.

The remote power supply is supervised by the 3-SSDC(1) module via the Signature loop. The remote power supply must share a common ground with the 3-PPS/M.

SDU programming

When programming the system for this application, you'll need to configure the CRC and define the appropriate lock type in the SDU. This can be either a strike or maglock.

Remote controls

Description of the application

In any access control system, a card reader and CRC can be used to operate devices that are completely remote from the CRC. In such cases the CRC simply creates an access event and passes it to the 3-SAC for processing by the CPU. Any device that can be controlled by an EST3 panel can be operated in response to an access event.

As a typical example, Figure 3-18 shows how the entrance devices to a secured parking area could be operated from a remote card reader. Note that any type of CRC input device could be used in place of a card reader.

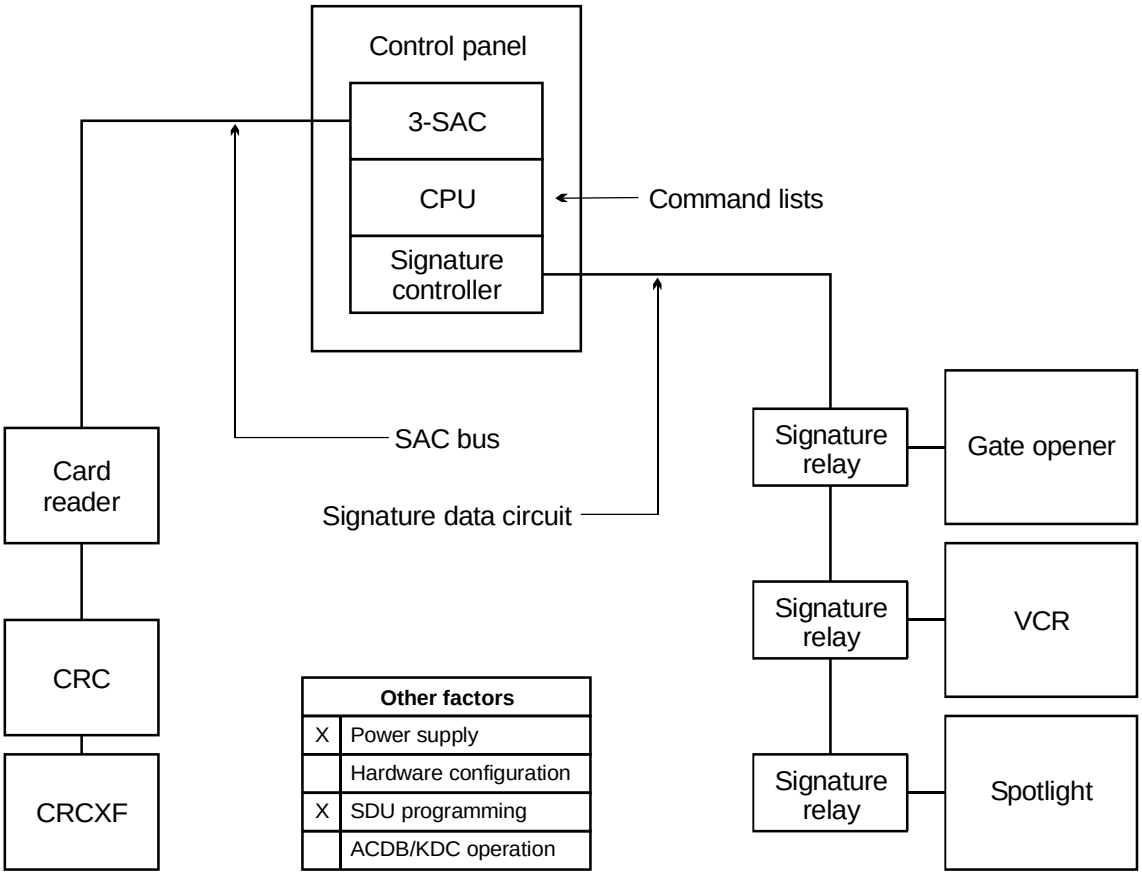

Figure 3-18: Remote control of a parking garage entrance

When the cardholder badges in, the access event is sent from the CRC to the 3-SAC and then to the CPU. At the CPU, the access event activates a predefined command list.

The command list operates the Signature relays on the Signature data circuit supported by the Signature controller module. These relays activate the gate opener, a spotlight, and a VCR image recording system.

An inside card reader and could be used to control exits from the area, but it would be more appropriate to use a motion detector, since egress from the area is not controlled.

Power supply

A CRCXF—CRC Transformer power supply is shown, assuming that the CRC is be located at some distance from the electrical room and control panel.

If you use an additional power supply other than the CRCXF, that power supply must be listed for fire alarm applications, must have ground fault detection disabled, and must have a circuit ground (circuit common) that is isolated from earth ground.

SDU programming

The SDU programmer must create a command list that specifies activation of the correct relays and devices, the delays required, and the deactivation of the devices.

Since there is no restoration phase of access events, the command list should include commands that turn off the devices.

Two-person rule

Description of the application

A *two-person rule* ensures that no staff member can be in a controlled area alone. A CRC operating under two-person rule prevents the entrance of a single person into the controlled area. When two people are present in the area, one cannot exit without the other.

The controlled area can have a single entrance or multiple entrances. The network coordinates user information between the CRCs that serve a common area.

A typical two-person rule application is shown in Figure 3-19, below.

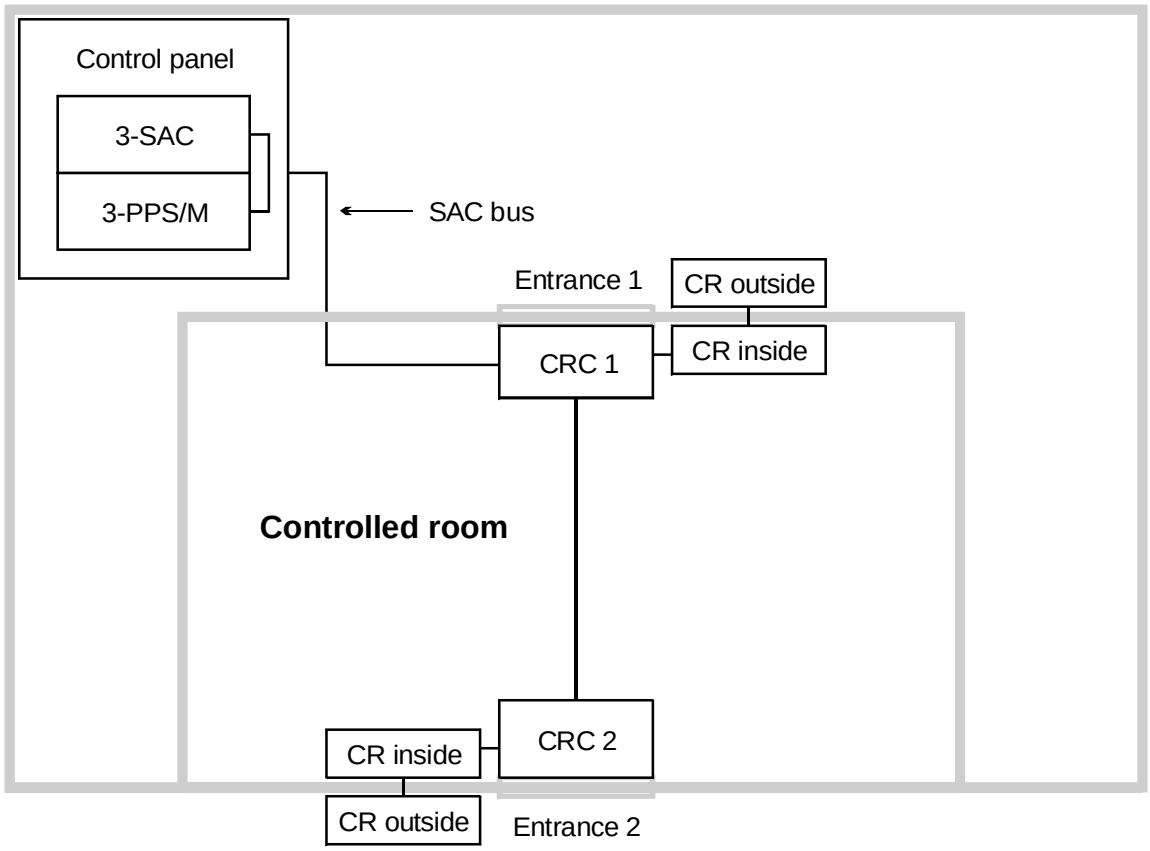

Other factors	
X	Power supply
X	Hardware configuration
X	SDU programming
X	ACDB/KDC programming

Figure 3-19: Two-person rule

Card reader

This application works best with card readers that support dual LED control. The CRC uses the second LED (or LED state) to signal the cardholder that a second person must badge in or out of the controlled area.

Hardware configuration

The control panel must contain the following rail modules:

- 3-SAC Security Access Control module
- 3-PPS/M Primary Power Supply module

The 3-SAC module supports the SAC bus. Power for the CRC is normally taken from the 3-PPS/M and is routed with the data lines in a cable composed of two twisted-pair wires.

SDU programming

If the CRC is to be used for two-person rule it must be configured in the SDU. On the CRC Configuration tab, the 2 Person Rule box must be checked.

You can also assign a predefined command list to the Access Denied 2 Person Timeout event. This setting is found on the CRC Command Lists tab.

Chapter 4

Centralized audio applications

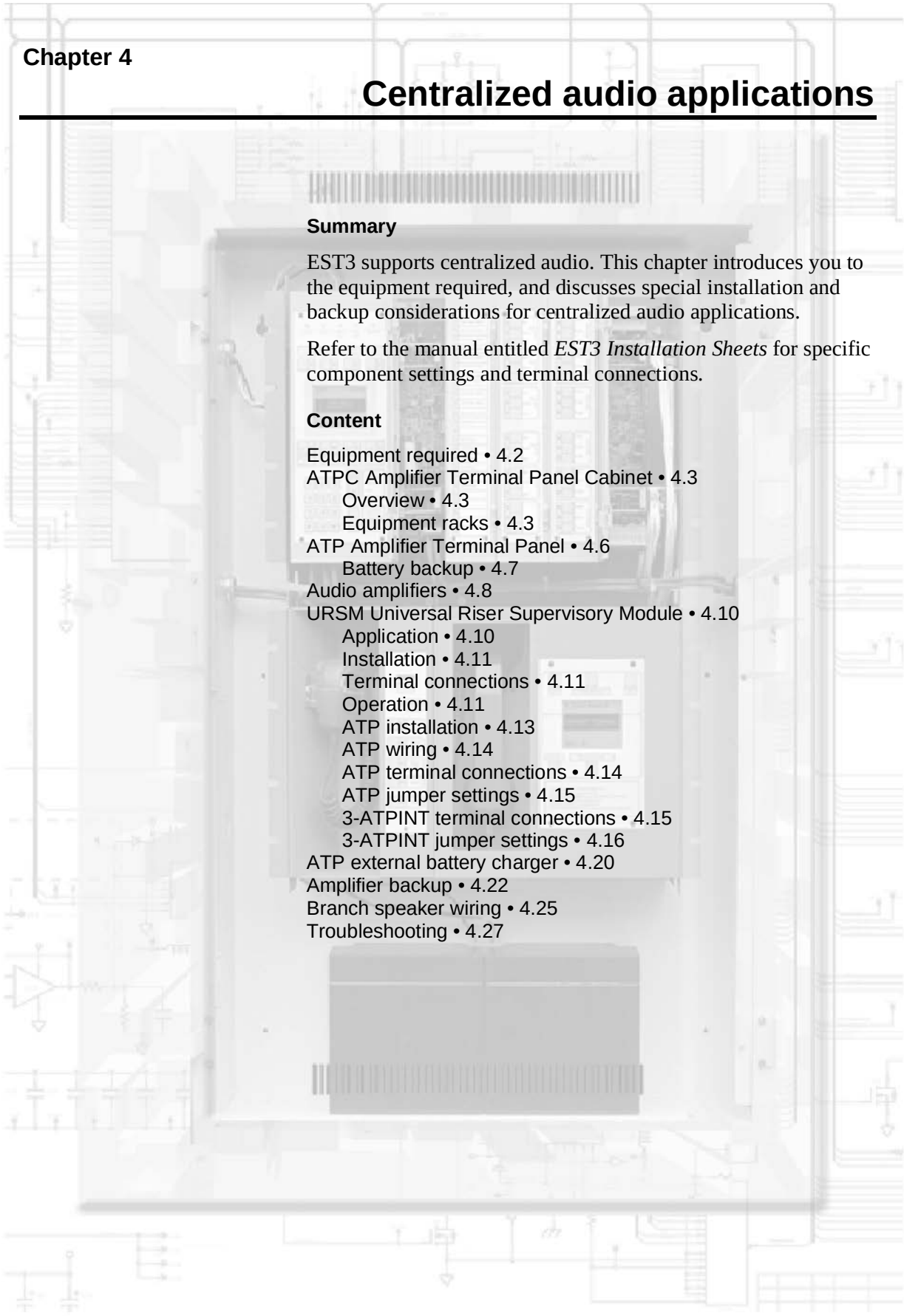

Summary

EST3 supports centralized audio. This chapter introduces you to the equipment required, and discusses special installation and backup considerations for centralized audio applications.

Refer to the manual entitled *EST3 Installation Sheets* for specific component settings and terminal connections.

Content

Equipment required • 4.2
ATPC Amplifier Terminal Panel Cabinet • 4.3
- Overview • 4.3
- Equipment racks • 4.3

ATP Amplifier Terminal Panel • 4.6
- Battery backup • 4.7

Audio amplifiers • 4.8
URSM Universal Riser Supervisory Module • 4.10
- Application • 4.10
- Installation • 4.11
- Terminal connections • 4.11
- Operation • 4.11
- ATP installation • 4.13
- ATP wiring • 4.14
- ATP terminal connections • 4.14
- ATP jumper settings • 4.15
- 3-ATPINT terminal connections • 4.15
- 3-ATPINT jumper settings • 4.16

ATP external battery charger • 4.20
Amplifier backup • 4.22
Branch speaker wiring • 4.25
Troubleshooting • 4.27

Equipment required

The EST3 system requires one 3-ZA20 amplifier for each audio channel to be operated *simultaneously.* The output of each amplifier is reduced from 25 Vrms to the appropriate input level (1 Vrms) using the 3-ATPINT interface, and then fed into the input of the banked amplifiers.

The wiring between the output of each 3-ZA20 and its associated amplifier bank input should be twisted, shielded pair, and can be configured for Class A or Class B integrity monitoring.

The output of the banked amplifiers (the audio riser) is directed to the appropriate areas using Signature Series modules. The SIGA-CC1 module, Figure 4-16, is used for single channel systems and the SIGA-CC2 module, Figure 4-17, is used for two channel systems.

EST3 audio system programming requires that the Signature modules controlling the audio signals be programmed in addition to the programming required for the 3-ZAxx amplifier(s) supplying the audio signal.

Note: Remember to follow power-limited or nonpower-limited wiring practices as determined by the amplifier providing the audio signal.

ATPC Amplifier Terminal Panel Cabinet

Overview

The Amplifier Terminal Panel (ATP), the 3-ATPINT Interface, RKU series enclosures, and Dukane 125 W or 250 W audio power amplifiers are the basic components of the Amplifier Terminal Panel Cabinet (ATPC). Appropriately sized standby batteries, and in some situations an external battery charger, round out the equipment required in the ATPC. The ATPC can be located up to 3,000 ft (914 m) from the 3-ZAxx amplifiers supplying the audio signals.

Equipment racks

RKU-Series Equipment Racks are designed to support standard 19 in (48.26 cm) wide rack-mount components. These UL listed enclosures are constructed of 16 gauge steel, and finished in either white or black enamel.

Interior-facing louvers on the two side panels and the back door provide ventilation for installed equipment, while maintaining a flush outside surface for side-by-side stacking of multiple racks. Six conduit knockouts for 1/2 in or 3/4 in conduit are available on the top end panel (three on top, three on the flange), and six on the bottom end panel (three on the bottom and three on the flange). Three 2.875 in (7.3 cm) diameter cable access holes are located on the bottom end panel for routing wiring to cabinet components. The equipment mounting rails on the front of the rack are recessed 0.625 in (1.59 cm).

The louvered back door attaches to the cabinet with spring hinges allowing easy field access and door removal. A key lock is provided on the door for added security. Multiple racks can be installed side by side where additional cabinet capacity is required.

The RKU series of 19 in (48.3 cm) equipment racks is used to house the banked amplifiers and associated equipment. Five sizes of racks are available to meet all requirements. These are listed in Table 4, below.

Table 4-1: RKU enclosure specifications

Model	Width	Height	Depth	Rack Space
RKU-36(B)	22.31 in (56.7 cm)	41.06 in (104.3 cm)	18.50 in (47.0 cm)	36.75 in (93.3 cm)
RKU-42(B)	22.31 in (56.7 cm)	46.31in (117.6 cm)	18.50 in (47.0 cm)	42.00 in (106.7 cm)
RKU-61(B)	22.31 in (56.7 cm)	65.56 in (166.5 cm)	18.50 in (47.0 cm)	61.25 In (155.6 cm)
RKU-70(B)	22.31 in (56.7 cm)	74.31in (188.7 cm)	18.50 in (47.0 cm)	70.00 in (177.8 cm)
RKU-77(B)	22.31 in (56.7 cm)	81.31 in (206.5 cm)	18.50 in (47.0 cm)	77.00 in (195.6 cm)

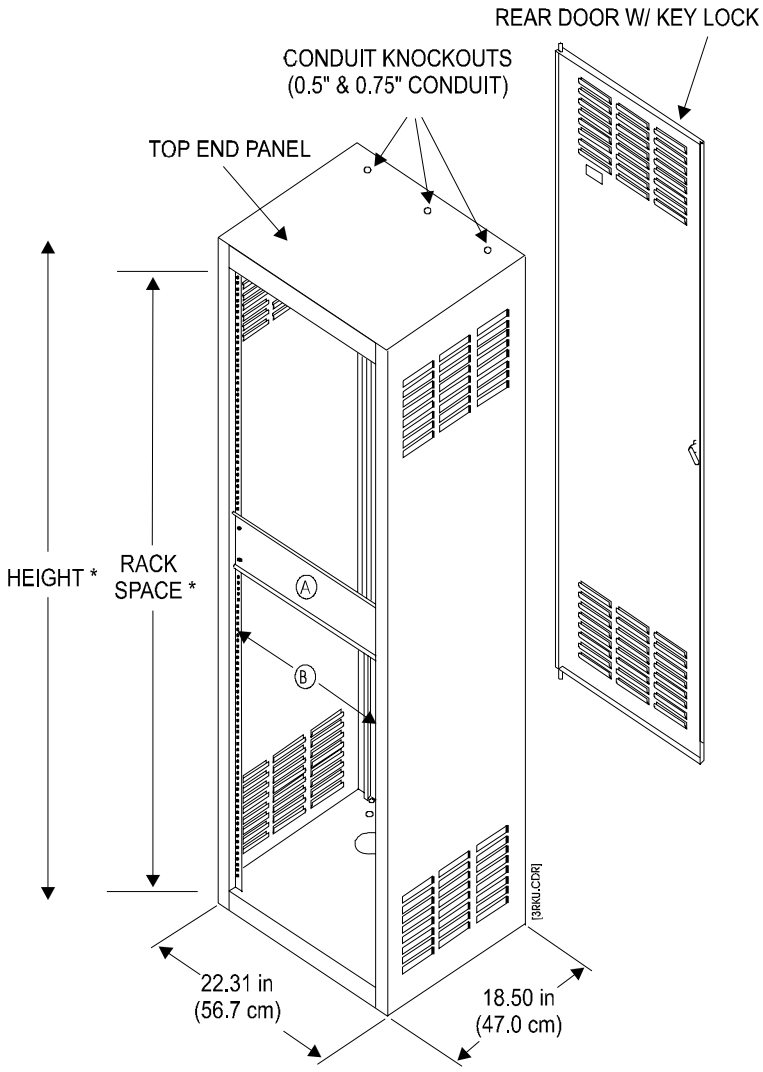

Figure 4-1: RKU Equipment Rack

ATP Amplifier Terminal Panel

A 3-ATPINT Interface must be installed on the ATP when used with the EST3 system.

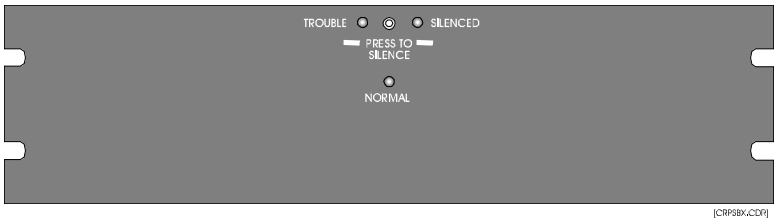

Figure 4-2: 3-ATP, front view

The Amplifier Terminal Panel, is a 5-1/4 inches (13.34 cm) high x 19 inches (48.3 cm) wide unit that senses loss of AC power or brownout conditions affecting the amplifiers. It also provides battery backup to the amplifiers if the audio system is active when the power failure or brownout occurs. The ATP must have a 3-ATPINT interface Card installed in order to work with the EST3 system.

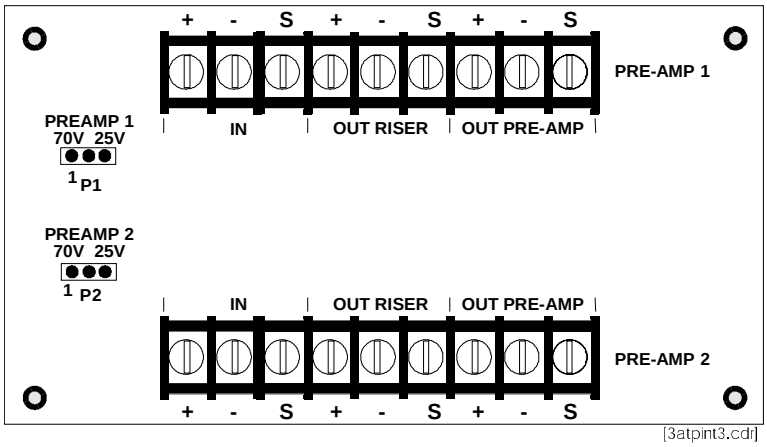

Figure 4-3: 3-ATPINT Interface Card

The ATP with 3-ATPINT installed, is mounted in an RKU rack and provides termination for the power amplifier's audio power and control signals. The panel has an integral battery charger capable of charging a maximum of 40 Ah sealed, lead-acid batteries. The charger is fully supervised and provides a silenceable trouble buzzer and trouble contacts. One ATP is required for every two amplifiers.

When a brownout condition is sensed at the ATP, the trouble contacts and AC fail contacts are closed, and an EST3 supervisory zone reports the condition to the EST3 system. The EST3 system is designed to provide +24 Vdc to the ATP's audio activity input via control relay, enabling backup power only when *both* primary

power to the amplifiers has failed *and* the EST3 audio is active during an alarm condition.

Battery backup

When multiple ATPs share a common battery, an external battery charger must be used.

To charge the batteries, you will use either the ATP's integral battery charger or an external LaMarche model A33-10-24 battery charger.

The internal battery charger is capable of charging 40 Ah batteries.

Caution: Do *not* connect the battery chargers of multiple ATPs in parallel to increase charger current.

When multiple ATPs share a common battery, or when the amplifier backup is to be supplied from a single battery source, a LaMarche model A33-10-24 external battery charger must be used. The Amplifier Terminal Panel switches battery power to the amplifiers.

When calculating the battery size required to support the amplifiers, the alarm current must be known. Each 250 W amplifier connected to the system draws 20 amperes at 24 Vdc at full load; 125 W amplifiers draw 10 amperes at 24 Vdc at full load.

The amplifiers draw no current in the standby mode. NFPA 72 specifies that designing the system to provide 15 minutes of the evacuation alarm at full load is the equivalent of 2 hours of emergency operation. The local authority having jurisdiction or local codes can modify the amount of time for which standby power must be provided.

Audio amplifiers

Two Dukane amplifiers are available. Model 1B3125 is rated at 125 watts output. Model 1B3250 is rated at 250 watts output. Both amplifiers operate from 120 Vac, 50/60 Hz, as well as 24 Vdc battery backup. The amplifiers are mounted in an Amplifier Terminal Panel Cabinet.

Note: The Model 1B3250 amplifier should be loaded to no more than 72% of rated capacity. The amp is derated by 28% to allow for continuous operation and line loss averages.

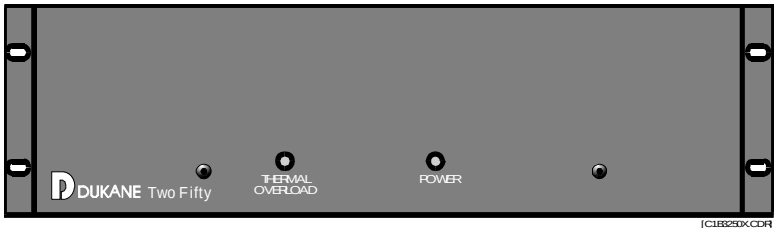

Figure 4-4: Dukane 250-watt Amplifier, Front View

Table 4-2: 1B3125 Amplifier specifications

Rated output power	125 W
Max. signal input	1 Vrms
Input impedance	75 kΩ
Output voltage	25 or 70 Vrms
Primary power	120 Vac, 60 Hz
Battery power	24 Vdc
AC power consumption standby full load	 27 W 360 W
DC power consumption standby full load	 0 W (when using the ATP) 11.5 A
Dimensions (HWD)	5.25 x 19.0 x 6.625 in (13.3 x 48.3 x 16.8 cm)
Weight	22.5 lb (10.1 kg)

Table 4-3: 1B3–250 Amplifier specifications

Rated output power	250 W (180 W max. loaded)
Max. signal input	1 Vrms
Input impedance	75 kΩ

Table 4-3: 1B3–250 Amplifier specifications

Output voltage	25 or 70 Vrms
Primary power	120 Vac, 60 Hz
Battery power	24 Vdc
AC power consumption standby full load	 48 W 700 W
DC power consumption standby full load	 0 W (when using the ATP) 20 A
Dimensions (H×W×D)	8.5 × 19 × 15 in (21.6 × 48.3 × 38.1 cm)
Weight	55 lb (24.9 kg)

URSM Universal Riser Supervisory Module

The Universal Riser Supervisory Module (URSM) provides open and short circuit, and amplifier supervision of two risers, audio (25 or 70 Vrms), and/or firefighter telephone riser. A form C dry relay contact is provided for each riser circuit's trouble annunciation. Ground fault detection is also provided for the risers using a GFD Ground Fault Detector.

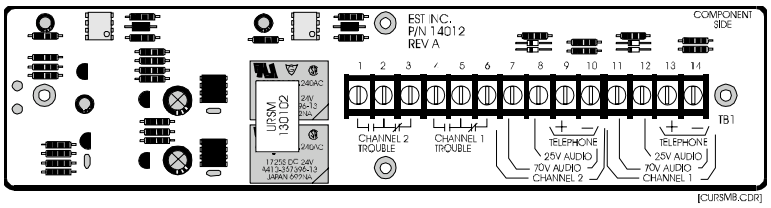

Figure 4-5: URSM

Application

The URSM is required on 70 Vrms audio system risers, and 25 Vrms audio systems. The URSM should be located in an equipment cabinet convenient to the end of the risers, which has 24 Vdc power available. URSM trouble contacts should be monitored with a SIGA-CT2 module to signal riser trouble information back to the network.

The URSM riser inputs should be connected to a GFD, which provides ground fault monitoring. The GFD should be monitored with a SIGA-CT1 module to signal riser ground fault conditions back to the network. The GFD and SIGA-CT1 must be installed in the same enclosure and should be located adjacent to the fire alarm control panel.

Table 4-4: URSM specifications

Voltage	24 Vdc
Standby Current	40 mA
Trouble Contact Rating	30 Vdc @ 2A
Trouble Detection Levels	
25 Vrms audio	10 Vrms
70 Vrms audio	23 Vrms
Firefighter's phone	2.7 Vrms

Installation

The URSM requires one-half of a standard mounting footprint and should be installed where the power pigtails can reach the power supply.

The GFD and CT1 must be installed in the same enclosure, located adjacent to the fire alarm control panel. Jumper JP1 on the GFD should be set to the 2-3 position.

Terminal connections

Refer to Figure 4-6.

Black pigtail = (-)24 Vdc power in

Red pigtail = (+)24 Vdc power in

TB1–1 to 3 = Channel 2, trouble relay contacts

TB1–4 to 6 = Channel 1, trouble relay contacts

TB1–7 = Channel 2, 70 Vrms audio riser input

TB1–8 = Channel 2, 25 Vrms audio riser input

TB1–9 = Firefighter's Telephone riser input, Ch 2

TB1–10 = Channel 2, Riser input, common

TB1–11 = Channel 1, 70 Vrms audio riser input

TB1–12 = Channel 1, 25 Vrms audio riser input

TB1–13 = Firefighter's Telephone riser input, Ch 1

TB1–14 = Channel 1, Riser input, common

Operation

The trouble relay will activate 45–60 seconds after a circuit short, circuit open, or amplifier failure is detected.

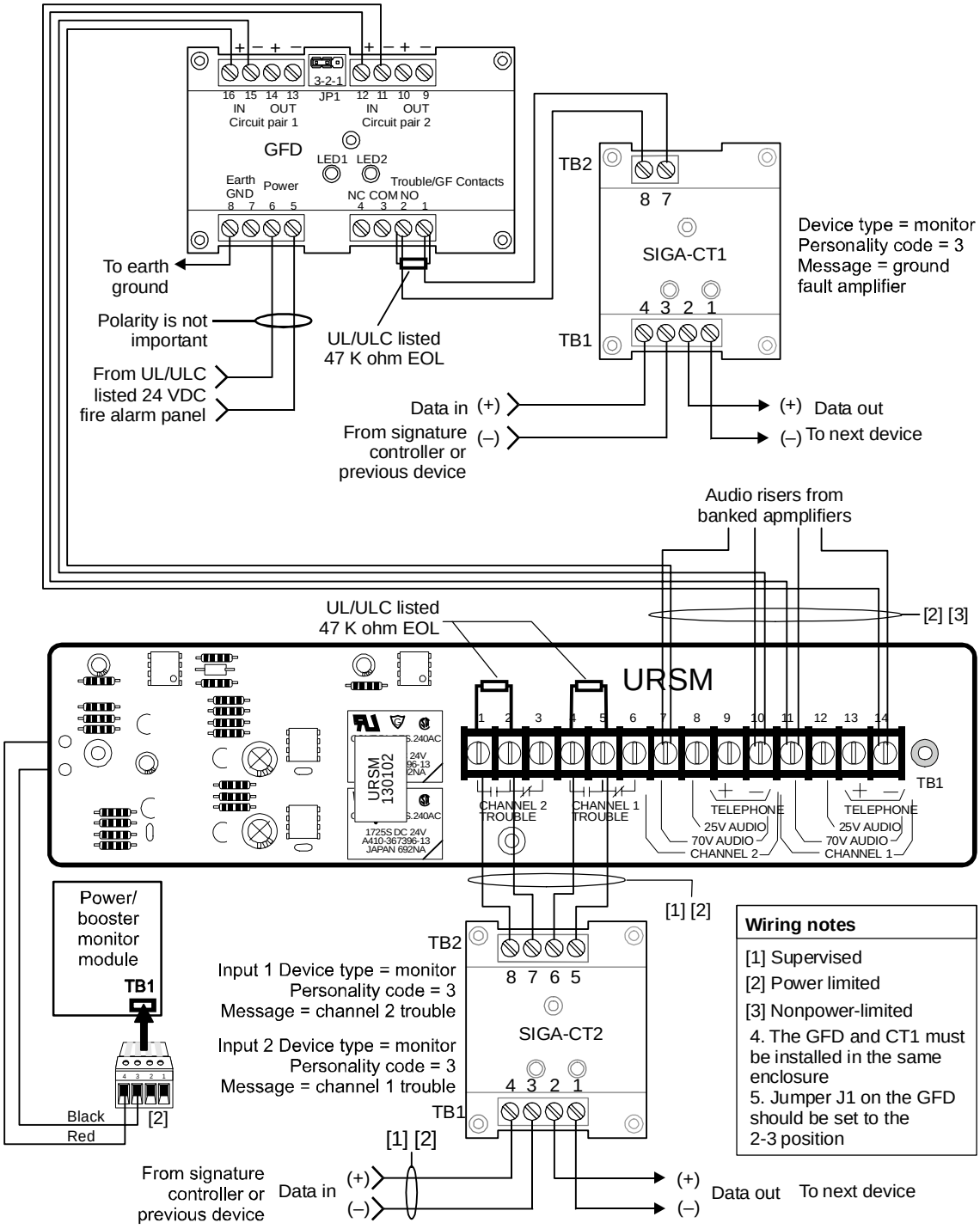

Figure 4-6: URSM wiring

ATP and 3-ATPINT installation

ATP installation

Refer to Figure 4-7.

To install the ATP:

1. Remove the cover plate from the left side of the ATP. The cover plate is held in place by four screws.
2. Install four short spacers [5] in the flanges of the card cage, and secure with nuts [6].
3. Mount the 3-ATPINT board [4] on the four short spacers [5] and secure with four long spacers [3].
4. Install the new cover plate [2] on the long spacers with the screws [1] provided.

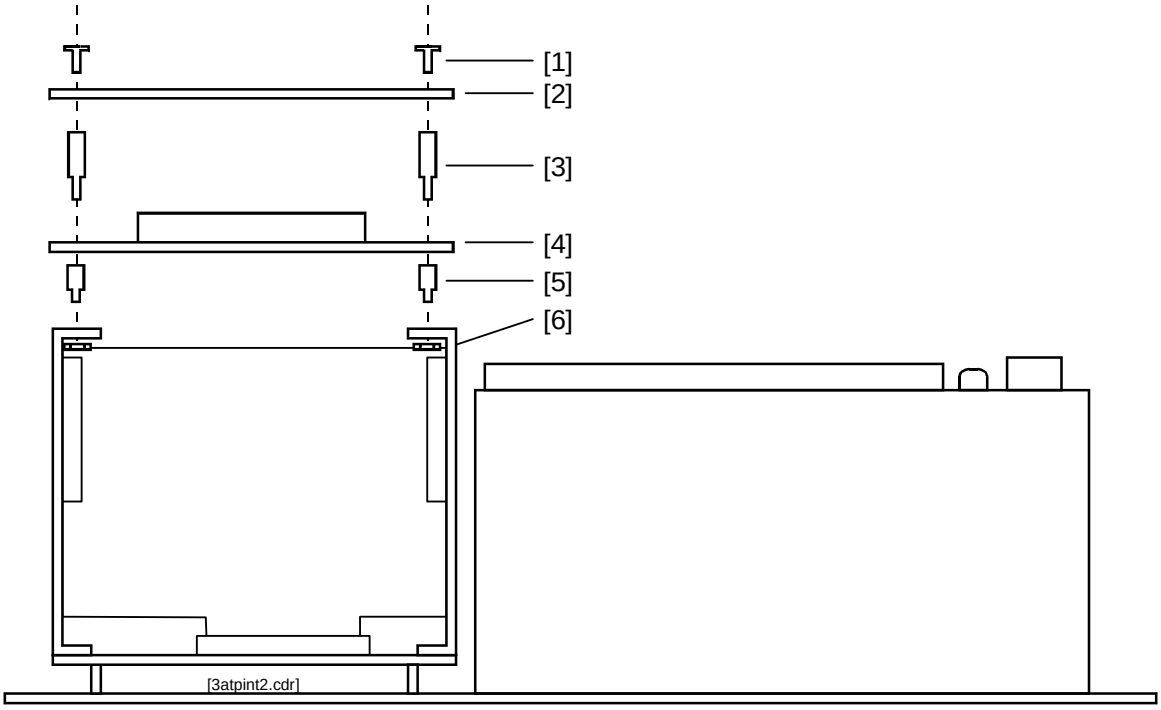

Figure 4-7: 3-ATPINT installation, bottom view

ATP wiring

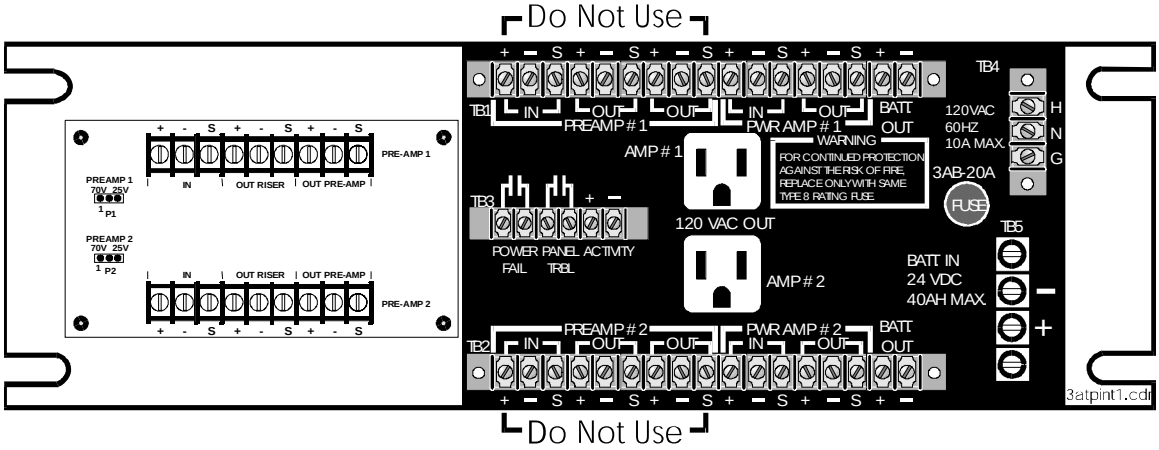

Figure 4-8: ATP with 3-ATPINT installed, rear view

ATP terminal connections

AMP POWER 1 = Type NEMA 5–15p receptacle to plug in one amplifier. Output is rated at 120 Vac, 5 A max.

AMP POWER 2 = Type NEMA 5–15p receptacle to plug in one amplifier. Output is rated at 120Vac 5 A max.

BATT IN - These terminals are for connection of gel cell batteries. When the internal battery charger is enabled (J3 on the APSB terminal board installed) a maximum of 40 Ah of gel cell batteries can be charged.

POWER FAIL - Normally open that activates when primary power to the amplifiers is either lost or in brownout condition. This contact is to be supervised by Signature series input module configured as a supervisory input.

PANEL TROUBLE - Normally open relay contacts that close when any of the following power problems are sensed:

- Loss of 24 Vdc power
- Failure of the battery charger circuit (if enabled)
- Any blown fuse or circuit breaker
- Ground fault, if enabled

ACTIVITY = 24 Vdc should be provided to these terminals through SIGA-CR contacts when either an alarm is present in the system or when the system user activates the paging system. When this input is active and the amplifier is in power fail, power relay contacts will transfer and provide battery power to the terminals marked BATT OUT. Each battery output terminal is capable of providing 20 A of battery current.

In addition to the terminals listed above, two groups of terminals are provided for connection of audio signals, one for each channel

WARNING: Do not use the preamp in and out terminals on the main body of the ATP if the 3-ATPINT Interface is installed. Route *all* preamp wiring to the 3-ATPINT.

The following terminals are provided on the ATP for audio channel 1 and channel 2.

PREAMP IN = Not used. Refer to 3-ATPINT terminal connections.

PREAMP OUT = Not used. Refer to 3-ATPINT terminal connections.

PREAMP OUT = Not used. Refer to 3-ATPINT terminal connections.

AMP IN = From the 70 V or the 25 V output of the power amplifier.

AMP OUT = to be connected to the Signature Series control modules and terminated with a URSM Universal Riser Supervisory Module. The URSM must be monitored by a Signature Series input module configured as a supervisory circuit. Each riser cannot supply a load greater than 180 W.

ATP jumper settings

Refer to Figure 4-9.

Table 4-5: 3-ATP Jumper Settings

Function	Jumper Setting
Ground fault detection	J1 = enable
No ground fault detection	J1 = disable
Internal battery charger operable	J2 = in
Internal battery charger disabled	J3 = in

3-ATPINT terminal connections

Refer to Figure 4-9.

IN RISER = To audio source amplifier 25 or 70 Vrms output, or previous 3-ATPINT riser output.

OUT RISER = 25 or 70 Vrms output to next 3-ATPINT IN RISER or EOL resistor.

OUT PRE-AMP = Low level audio to audio power amplifier input.

3-ATPINT jumper settings

Refer to Figure 4-9.

Table 4-6: 3-ATPINT jumper settings

Input / Voltage	Jumper setting
Pre-Amp #1, 70 Vrms	P1 = 1/2
Pre-Amp #1, 25 Vrms	P1 = 2/3
Pre-Amp #2, 70 Vrms	P2 = 1/2
Pre-Amp #2, 25 Vrms	P1 = 2/3

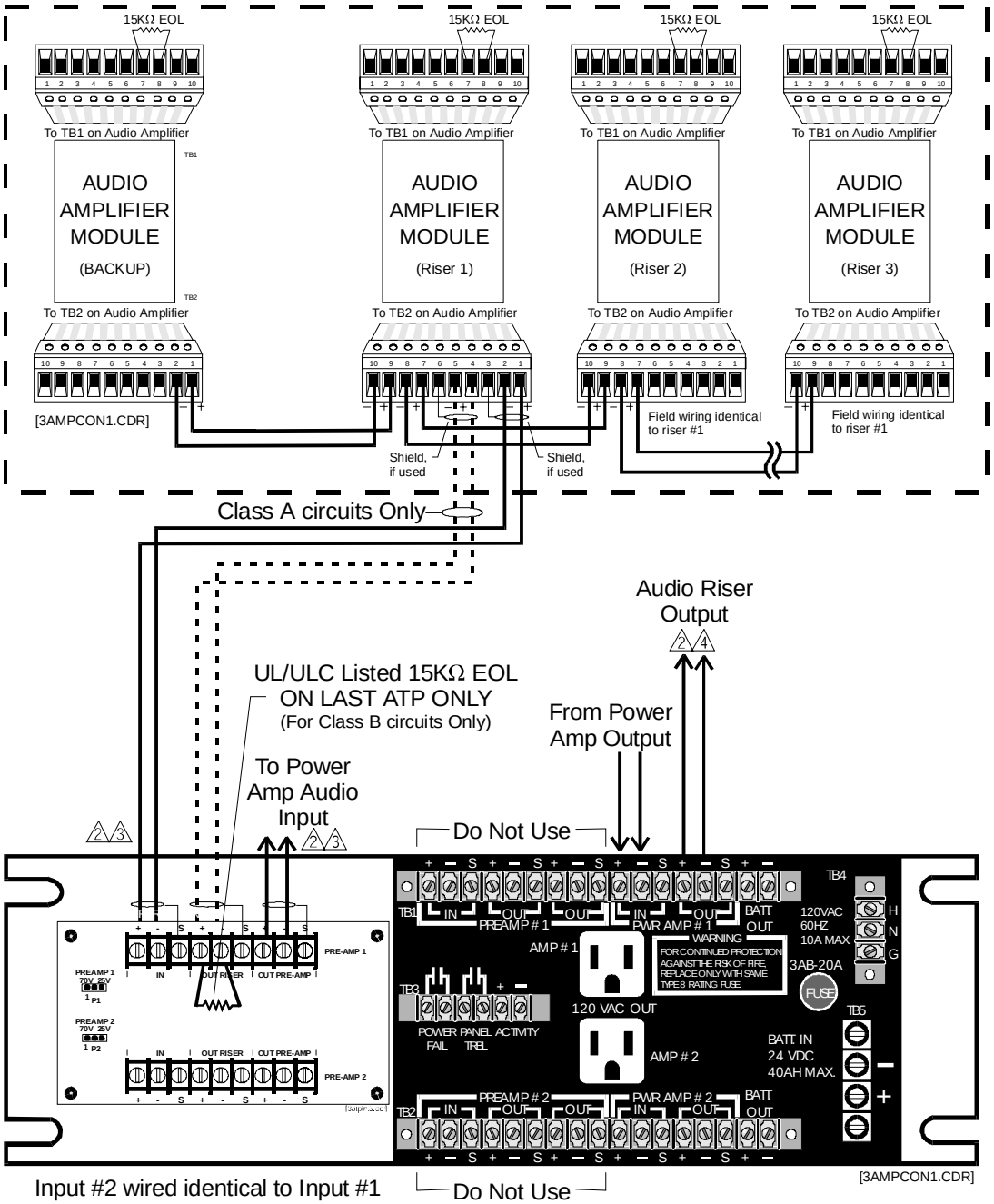

JUMPER SETTINGS

P1 = 1/2, Pre-Amp #1 Input 70 V_{RMS}
P1 = 2/3, Pre-Amp #1 Input 25 V_{RMS}
P2 = 1/2, Pre-Amp #2 Input 70 V_{RMS}
P2 = 2/3, Pre-Amp #2 Input 25 V_{RMS}

Wiring Notes

1. Circuit polarity shown in supervisory condition.
2. Supervised circuit.
3. Power limited circuit.
4. Non-Power limited circuit.
5. Back up amplifier size must equal the wattage of the largest amplifier to be backed up.
6. Set J1 & J2 to match source amplifier output voltage.
7. Additional ATPs may be connected to the same audio source by connecting the ATP pre-amp output to the pre-amp input of the next ATP.

Figure 4-9: ATP with 3-ATPINT wiring

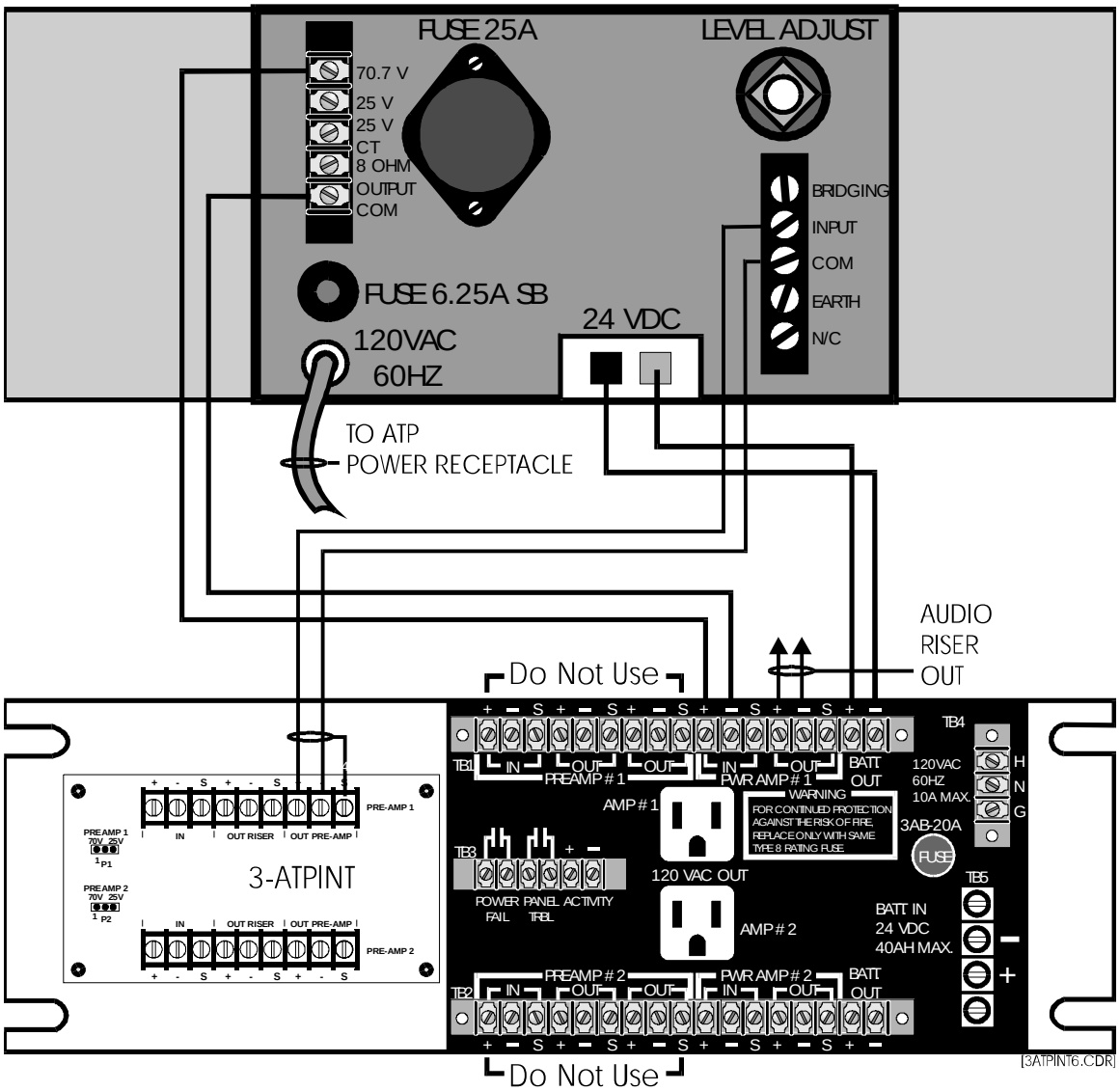

Figure 4-10: Wiring from Dukane amplifier to ATP

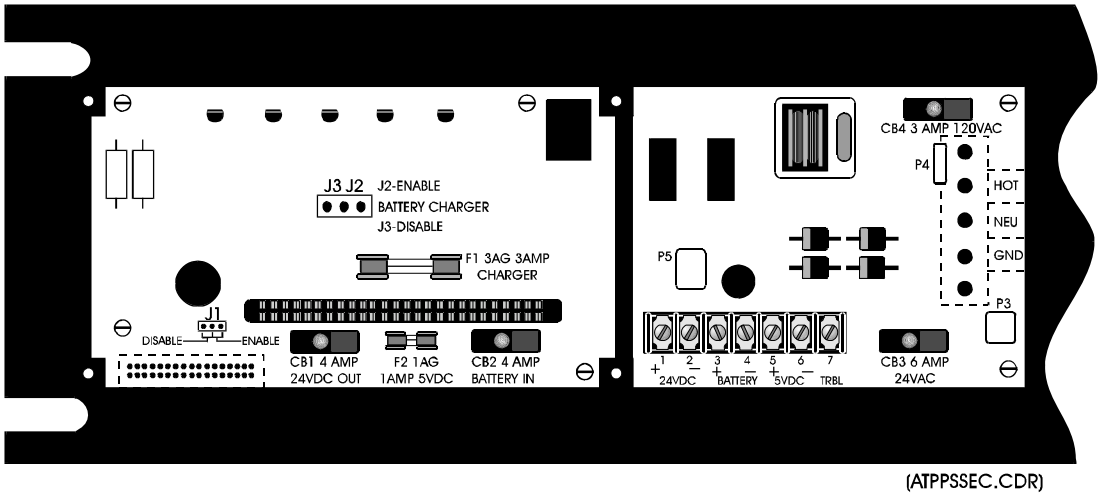

Figure 4-11: Power supply terminal card, with 3-ATPINT, cover removed

The output of the amplifier must be set for the proper value by adjusting the INPUT LEVEL adjustment on the back of the amplifier. With a 1,000 Hz tone generated by the 3-ACPor 3-ZA20, the amplifier must be adjusted for 70 Vrms output using the appropriate RMS voltmeter.

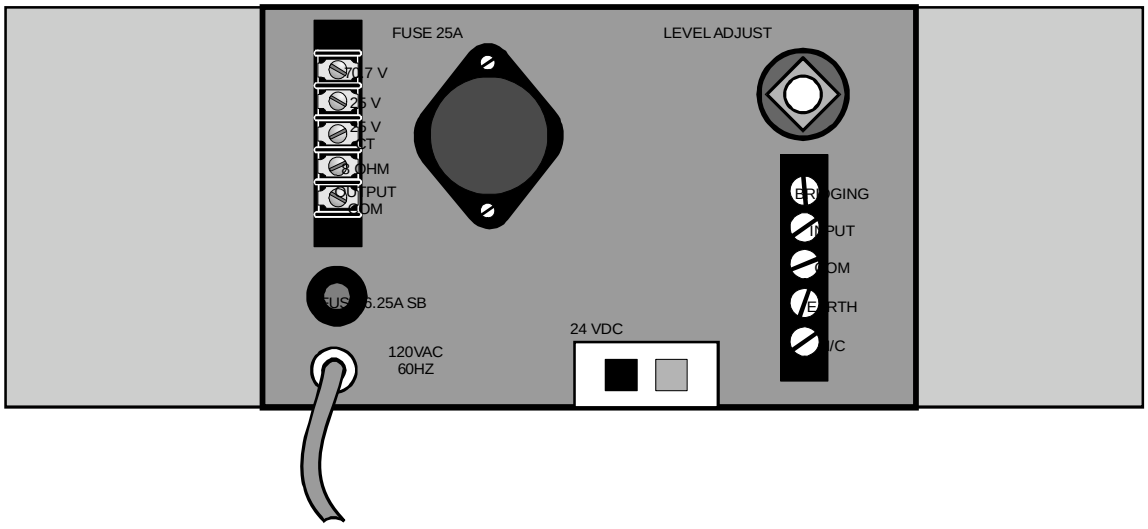

Figure 4-12: Dukane amplifier, rear view

ATP external battery charger

When multiple ATPs are connected to a common battery set, disable the ATP internal battery charger, by installing J3 and removing J2 on the APSB terminal board. This is located in the ATP. (see Figure 4-11). Use a La Marche model A33-10-24 external battery charger, which can charge up to 160-Ah batteries, as shown in Figure 4-13.

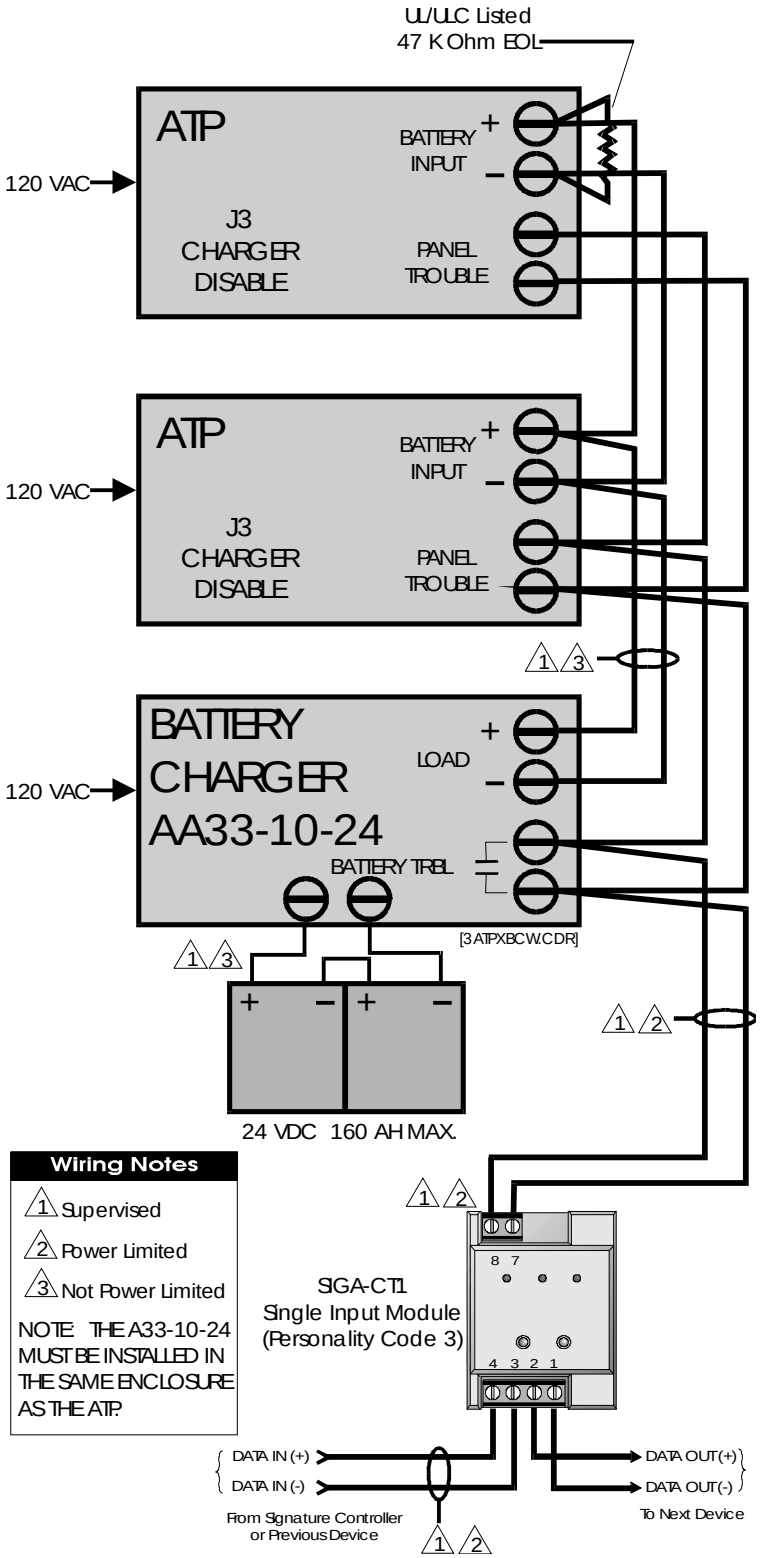

Figure 4-13: ATP external battery charger wiring

Amplifier backup

Various methods are available to provide a spare amplifier in the event that a primary amplifier fails. Depending upon the local Authority Having Jurisdiction, a single backup amplifier can be required for each primary amplifier or a single backup per bank of amplifiers.

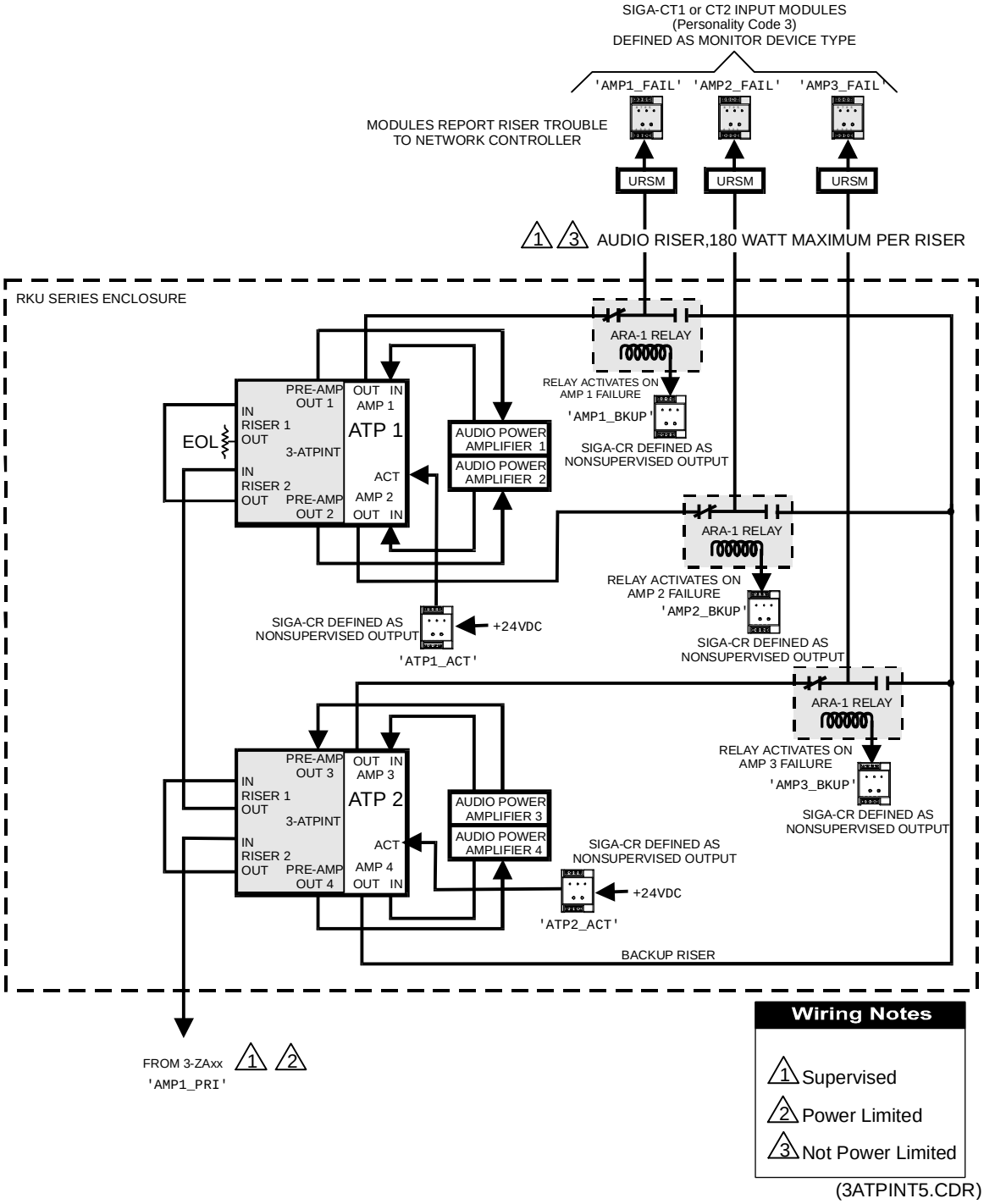

Figure 4-14: Amplifier bank with spare amplifier

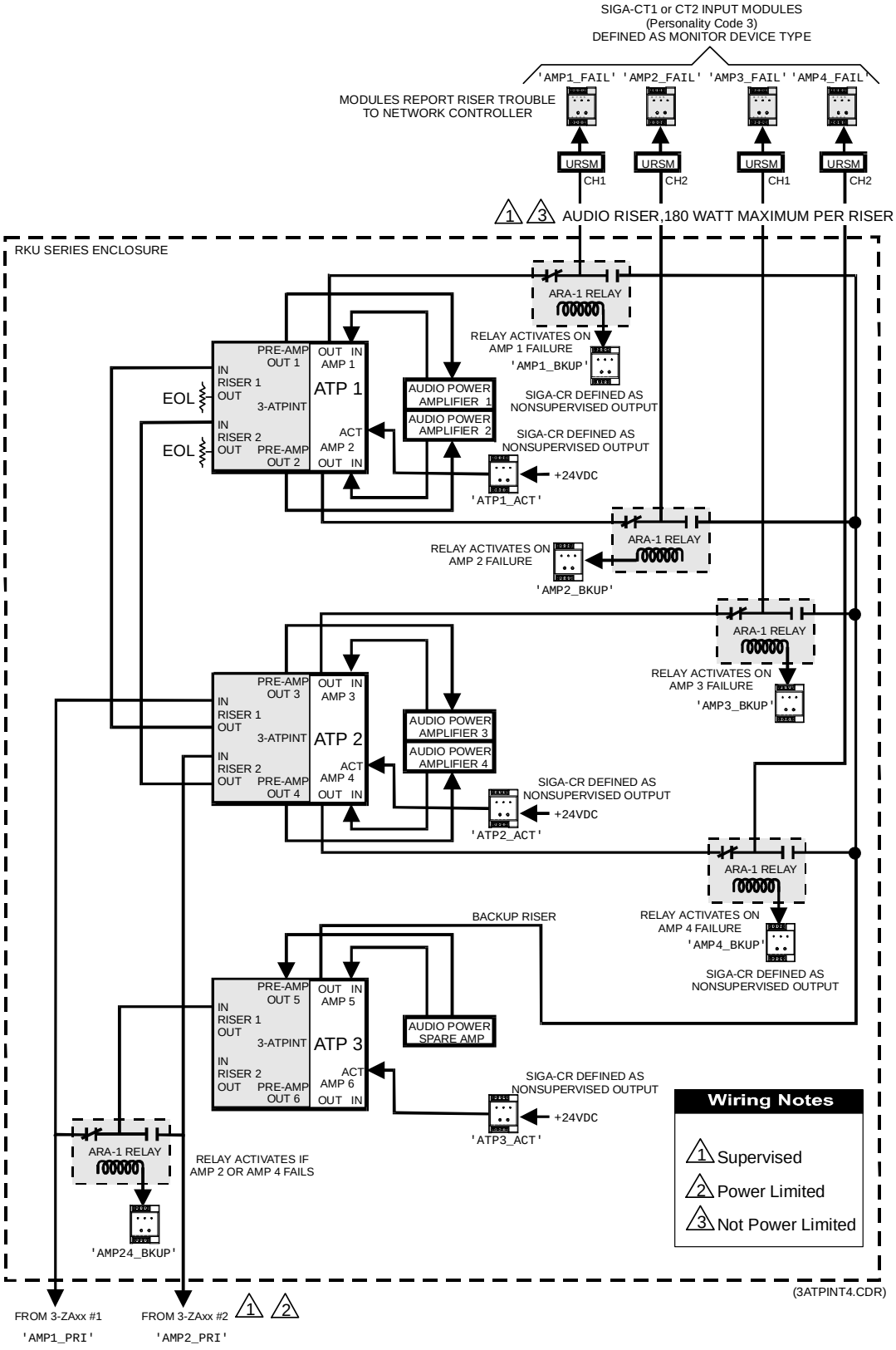

Figure 4-15: One spare amplifier in dual channel system

Branch speaker wiring

Signature modules are used to connect individual floor branch speaker circuits to the main riser. Single channel branch speaker circuits can be wired as Class A (Style Z) using the SIGA-UM module. Class B (Style Y) circuit configuration can be accomplished using either the SIGA-UM or SIGA-CC2 modules. The branch speaker circuits of two channels can be wired as Class B (Style Y) circuits using the SIGA-CC2 module.

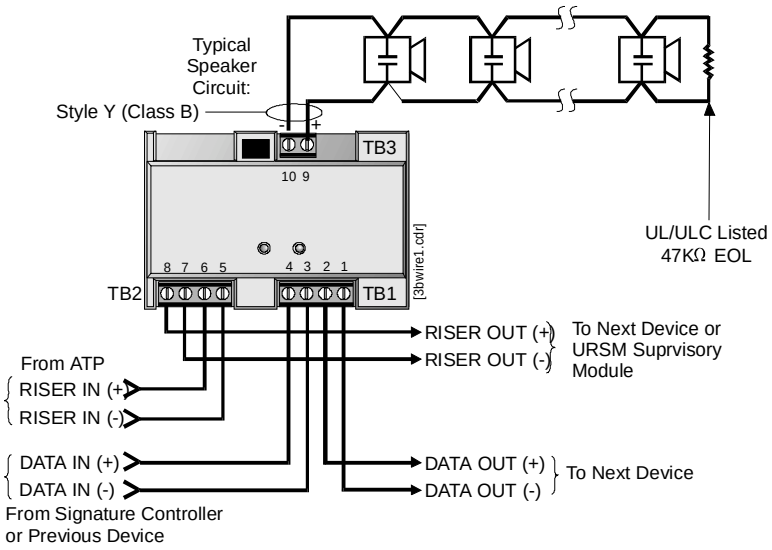

Figure 4-16: Single channel Class B wiring, SIGA-CC1 Module

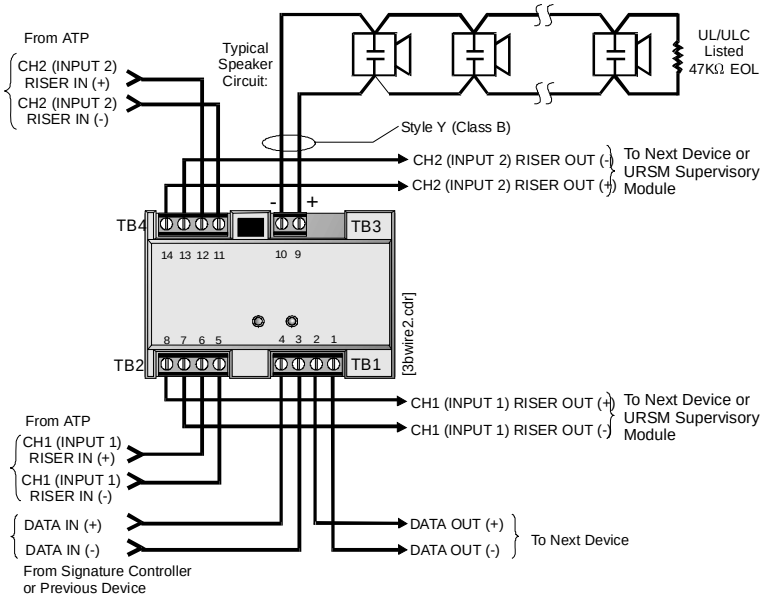

Figure 4-17: Two channel Class B wiring, SIGA-CC2 Module

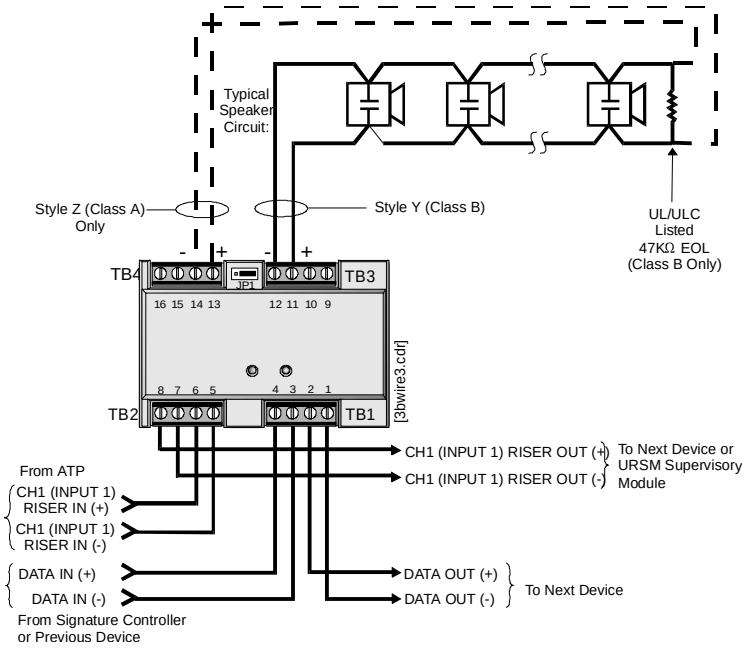

Figure 4-18: Single channel Class A wiring, SIGA-UM Module

Troubleshooting

The ATP senses loss of AC power or brownout conditions affecting the amplifiers. It also provides battery backup to the amplifiers if the audio system is active when the power failure or brownout occurs. The ATP must have a 3-ATPINT interface Card installed in order to work with the EST3 system.

The ATP enters a trouble state if any of the following events occur:

- ATP brownout or loss of AC power
- Low battery charge or missing battery (with J2 enabled)
- Ground fault (if ground fault detection J1 is enabled)
- Fuse failure

Chapter 5

Installation

Summary

This chapter provides installation information for system components and applications that supplements the instructions provided on individual component installation sheets.

Content

Installation overview • 5.3
- Electrostatic discharge precaution • 5.3
- Energized system precaution • 5.3
- Circuit compatibility • 5.3
- Recommended cable manufacturers • 5.4

UL 864 NAC signal synchronization • 5.6
- Requirements • 5.6
- Typical circuits • 5.8

Creating an initial startup version of the project database • 5.16
System installation sequence • 5.18
Preliminary field wiring testing • 5.19
Chassis installation in EIA 19-inch racks • 5.22
ATCK Attack Kit for cabinets • 5.23
Local rail module installation • 5.24
3-MODCOM Modem Communicator module • 5.26
- Features • 5.26
- Functions • 5.27
- Equipment • 5.28
- Configuration options • 5.29
- Failover operation • 5.30
- Compatibility • 5.32
- Transmission protocols • 5.32
- Transmission process • 5.33
- Programming considerations • 5.35
- Installation • 5.36

3-SAC Security Access Control module • 5.40
- Product description • 5.40
- SAC bus • 5.40
- Recommended cabling • 5.40
- Additional power supply wiring • 5.40

3-AADC1 Addressable Analog Driver Controller and IRC-3 • 5.41
AC power and DC battery wiring • 5.42
Connecting auxiliary/booster power supplies • 5.44
- Installation • 5.44
- Configuration • 5.44

Connecting the PT-1S impact printer • 5.46
- System printer power supply • 5.48

Adjusting amplifier output levels • 5.49
- What you will need • 5.49
- Adjustment procedure • 5.49

Design considerations • 5.49
Connecting a CDR-3 Zone Coder for coded tone output • 5.50
What you will need • 5.50
Adjusting the gain on the 3-ASU auxiliary input • 5.50
Connecting an external modem for use with the Remote Diagnostics Utility • 5.53
Running the RPM and distributing profiles • 5.55

Installation overview

Electrostatic discharge precaution

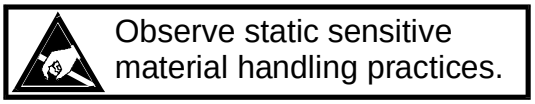

The components used in this system are sensitive to electrostatic discharge (ESD). When handling electronic assemblies, you must take precautions to avoid the build up of static charges on your body and on the equipment.

- Do not open the anti-static packaging until you are ready to install the electronics.
- Wear a grounded wrist strap to bleed off any static charge which may have built up on your body.

Energized system precaution

Caution: Never install or remove a module or cabinet component with power applied to the cabinet.

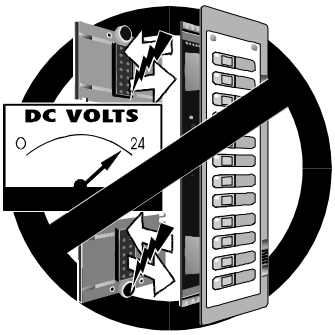

Circuit compatibility

The following circuit compatibility matrix indicates which circuit types may occupy the same conduit or be bundled together, where permitted by code.

CIRCUIT COMPATIBILITY MATRIX

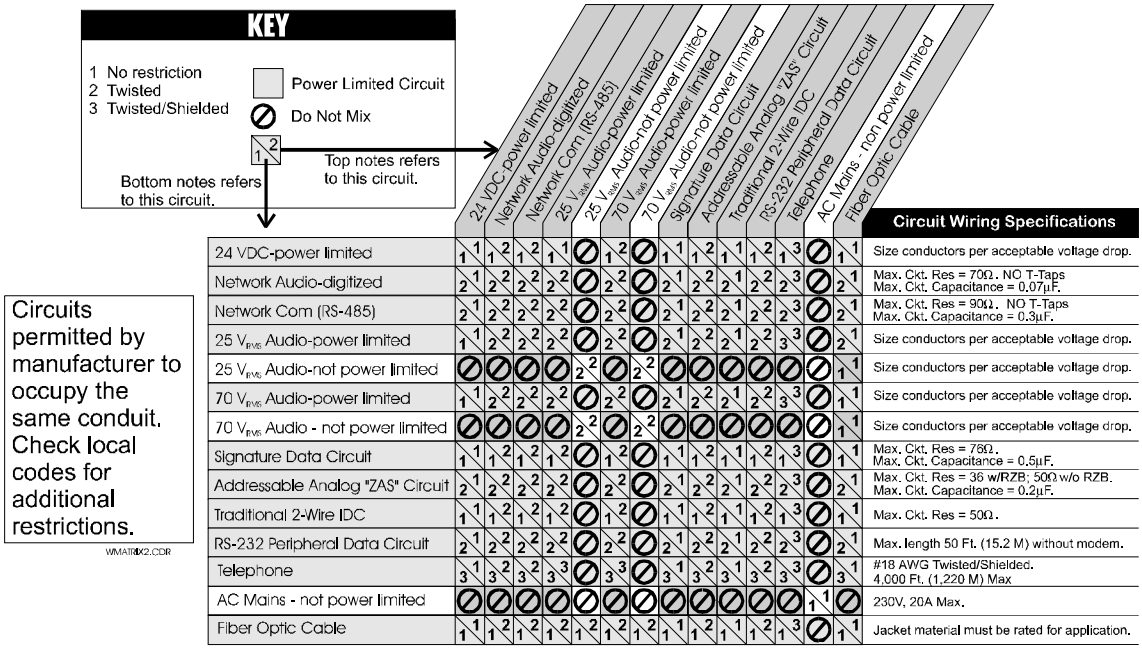

Recommended cable manufacturers

Atlas Wire and Cable Corp.
133 S. Van Norman Road
Montebello, CA 90640
(213) 723-2401

West Penn Wire Corp.
2833 West Chestnut Street
P.O. Box 762
Washington, PA 15301
(412) 222-7060

Belden Wire and Cable Corp.
P.O. Box 1980
Richmond, IN 47375
(317) 983-5200

BSCC
233 Florence Street
Leominster, MA 01453
Telephone: (508) 537-9138
Fax: (508) 537-8392

Remee Products, Inc.
186 North Main Street
Florida, NY 10921

Table 5-1: Recommended cable manufacturer's part numbers

		#14 (1.50 mm^2) Twisted Pair		#16 (1.00 mm^2) Twisted Pair		#18 (0.75 mm^2) Twisted Pair	
MFG	**Type**	**Unshielded**	**Shielded**	**Unshielded**	**Shielded**	**Unshielded**	**Shielded**
ATLAS	FPL	218-14-1-1TP	218-14-1-1STP	218-16-1-1STP	218-16-1-1STP	218-18-1-1TP	218-18-1-1STP
	FPLP	__	1762-14-1-2J	1761-16-1-2J	1762-16-1-2J	1761-18-1-2J	1762-18-1-2J
BELDEN	FPL	9580	9581	9572	9575	9571	9574
	FPLP	__	83752	__	__	__	__
BSCC	FPL	__	231402	__	241602	__	241802
	FPLP	341402	__	341602	351602	341802	351802
REMEE	FPLP	NY514UH	NY514SH	NY516UH	NY516SH	NY518UH	NY518SH
WEST PENN	FPL	994	995	990	991	D9780	D975
	FPLP	60993	60992	60991	60990	60980	60975

UL 864 NAC signal synchronization

Requirements

Table 5-2 lists the installation requirements for systems that must meet UL 864 NAC signal synchronization requirements.

Table 5-2: Installation requirements for UL 864 signal synchronization

Circuit	Installation requirements
3-ASU audio riser	The 3-ASU audio subsystem uses a single signal source, so audible NACs on the 3-ASU network audio riser are synchronized network-wide.
3-AADC(1)	Signals are synchronized for a NAC when you use a riser selection module, a Genesis Signal Master synchronization module, and Genesis or Enhanced Integrity notification appliances. Separate NACs on the loop are not synchronized. Configure the audible notification appliances for temporal or steady output as desired.
3-IDC8/4	Signals are synchronized for a NAC when you use a Genesis Signal Master synchronization module and Genesis or Enhanced Integrity notification appliances. Separate NACs on the module are not synchronized. To silence audible appliances separately, use two NAC channels from the 3-IDC8/4 to provide separate audible and visible power to the NAC. In this configuration, the signal silence function operates as defined in your project. See Figure 5-1 for typical wiring. Configure the audible notification appliances for temporal or steady output as desired.
3-SSDC(1)	Signals are synchronized for all NACs on the Signature data circuit when you use SIGA-CC1S or SIGA-MCC1S modules and Genesis or Enhanced Integrity notification appliances. See Figure 5-3. The system does not synchronize Signature data circuits on separate 3-SSDC(1) modules in one panel or between panels. Signals are synchronized for a NAC on the Signature data circuit when you use SIGA-CC1 and SIGA-MCC1 addressable NAC modules, a Genesis Signal Master synchronization module, and Genesis or Enhanced Integrity notification appliances. [1] Separate NACs on the Signature data circuit are not synchronized. See Figure 5-4. Configure the audible notification appliances for temporal or steady output as desired.
3-SDDC(1)	Synchronization is not supported between two daughter cards on the same 3-SDDC(1) module. NACs on the individual daughter cards are synchronized as described above for the 3-SSDC(1).

Table 5-2: Installation requirements for UL 864 signal synchronization

Circuit	Installation requirements
SIGA-CC1, SIGA-MCC1, SIGA-CC1S, and SIGA-MCC1S	Signature CC1 modules do not generate temporal signals, they simply turn the NAC circuit on or off. You must configure the notification appliances for temporal or steady output as desired.
G1M and G1M-RM	The G1M and G1M-RM Genesis Signal Master modules can be used to synchronize NACs consisting of Genesis appliances. They can also be used to synchronize mixed NACs consisting of Genesis and Enhanced Integrity appliances, but the first appliance must be a Genesis device, and the Genesis Signal Master module must be mounted on this device. G1M and G1M-RM Genesis Signal Master modules cannot be used to synchronize NACs consisting of Enhanced Integrity appliances.

[1] You can also use SIGA-UM and SIGA-MAB modules configured as Class B addressable NAC modules (personality code 16.)

2. If notification appliances are used on the data line for more than one zone, each zone must have isolation so that a break, ground, or wire-to-wire fault shall not affect more than one zone.

3. If the riser is used for more than one notification zone, install in accordance with the survivability from attack by fire requirements in NFPA 72 *National Fire Alarm Code.*

Typical circuits

The circuit diagrams that follow use the term *zone* to indicate *notification zones* as defined in UL 864.

“Notification zone: An area covered by notification appliances that are activated simultaneously.”

Figure 5-1 shows a typical application of the 3-IDC8/4 module to support two notification zones. In this example, power is being supplied from the EST3 rail, and the jumpers (JP1 through JP4) are set accordingly.

It is also possible to create a similar application that uses external power, supplied to NAC 1/2 IN and NAC 5/6 IN. Refer to the 3-IDC8/4 installation sheet for wiring details and the required jumper settings.

In Figure 5-1, both zones are configured with separate NAC circuits for audible and visible appliances. NAC 1 and NAC 5 are programmed as visible device types, and NAC 2 and NAC 6 as audible device types. This means that the signal silence function can be configured to silence only the horns.

Separating the visible and audible devices is optional and may not be required for your project. Refer to the Genesis Signal Master installation sheet for additional configurations and wiring details.

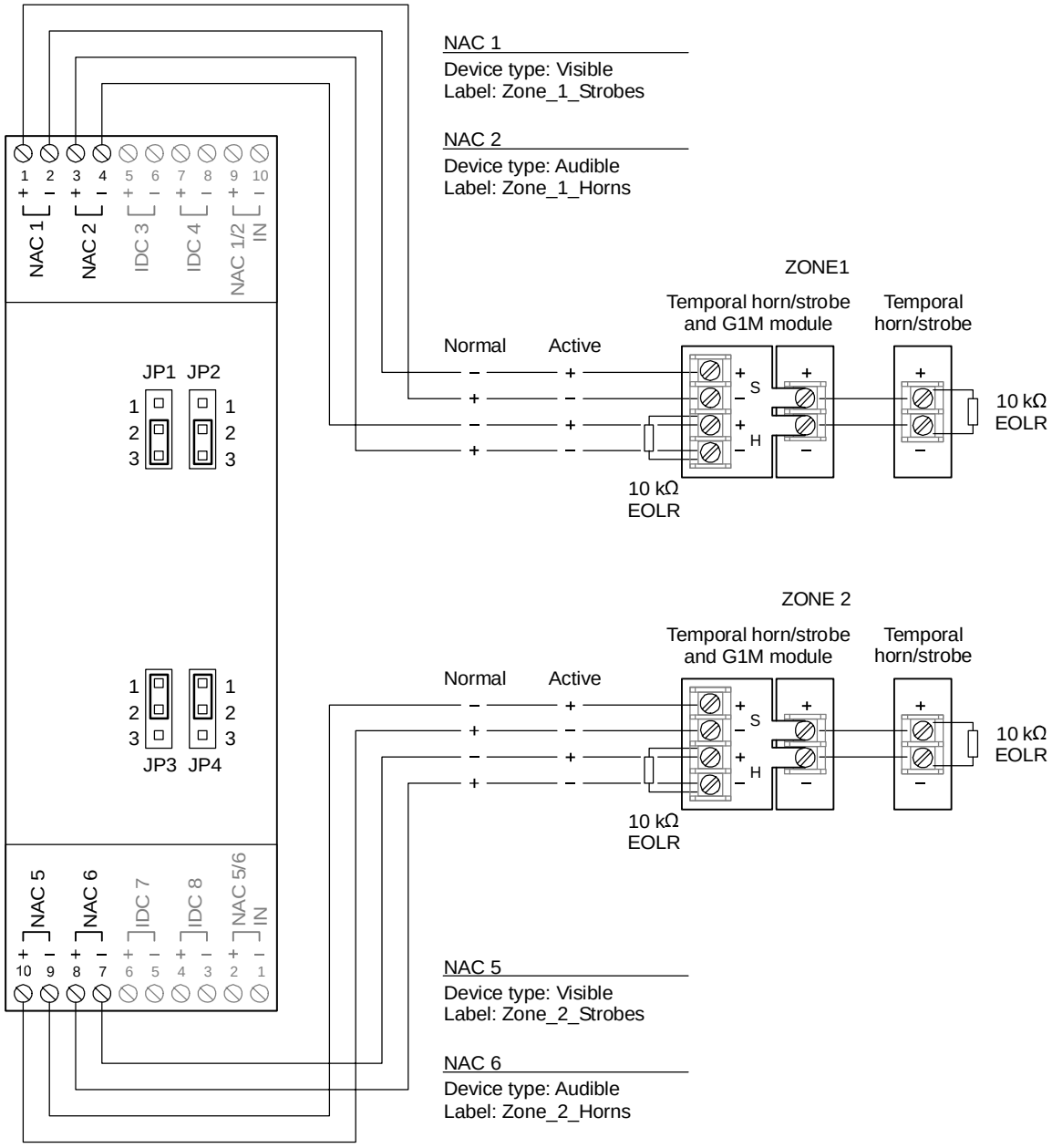

Figure 5-1: Typical 3-IDC8/4 card NAC wiring

Figure 5-2 shows a Signature circuit, wired as Class A, and using isolation modules or bases for each IDC and NAC.

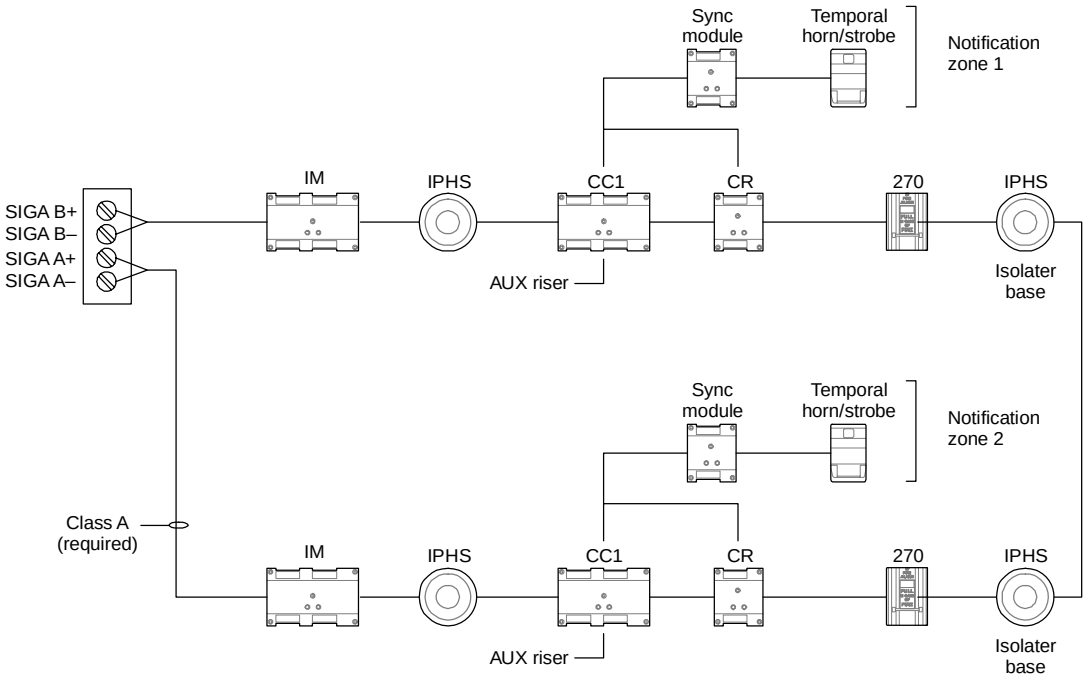

Figure 5-2: Signature wiring for notification circuit signal synchronization

Figure 5-3 Shows two NACs on a Signature data circuit. Each NAC is controlled by a SIGA-CC1S module, one for audible appliances, and one for visible appliances.

As in Figure 5-1, this configuration allows the audible appliances to be silenced independently of the visible appliances. This operation is optional, and may or may not be required for your project.

The SIGA-CC1S modules provide signal synchronization for both NACs.

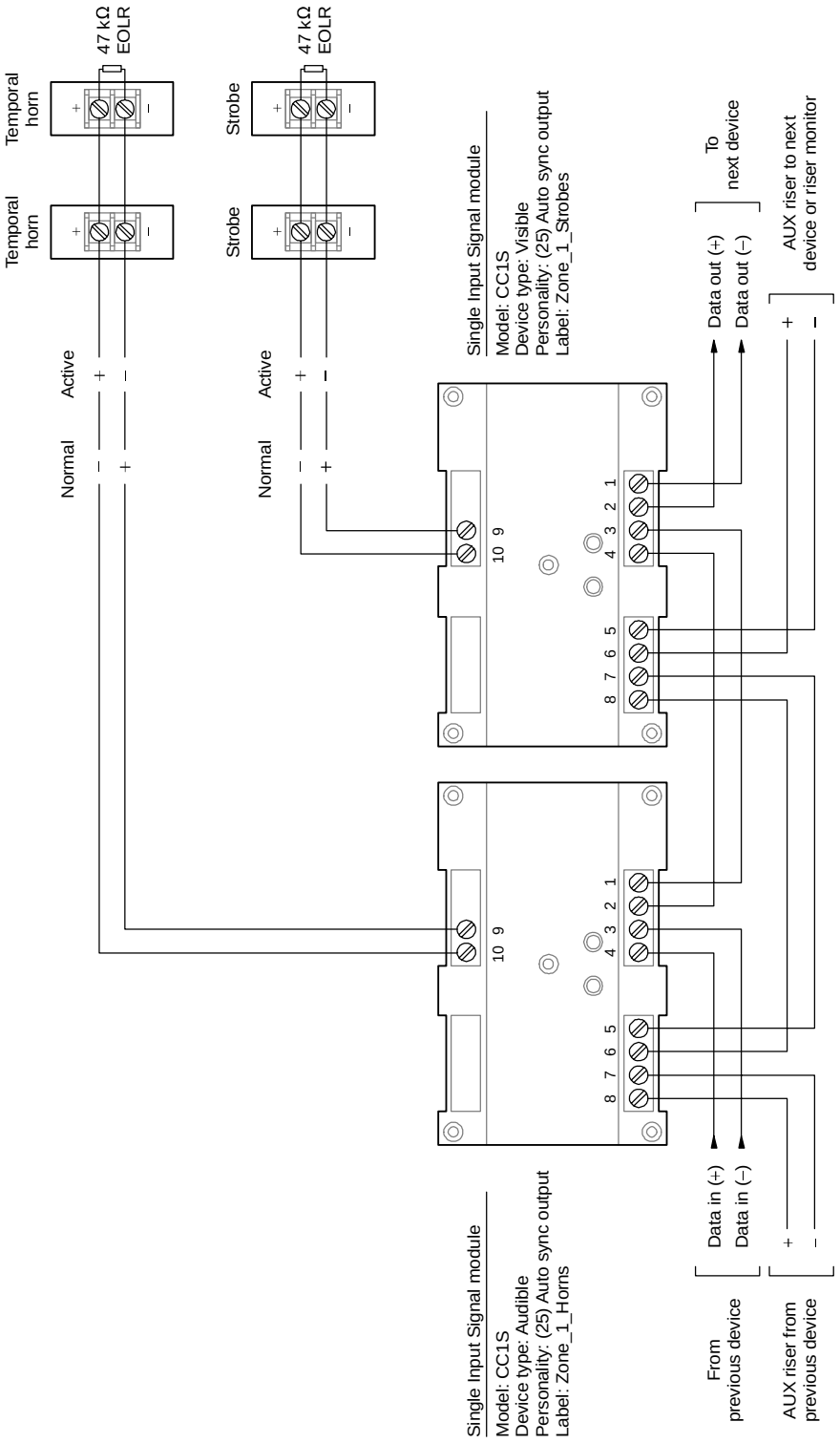

Figure 5-3: Typical SIGA-CC1S NAC wiring

Figure 5-4 shows a single SIGA-CC1 switching an NAC on or off. The G1M module provides signal synchronization for the temporal horn/strobe appliances.

As in earlier examples, this circuit allows for independent silencing of the audible appliances. This operation is provided by the SIGA-CR module, which opens or closes the circuit between S+ and H+ on the G1M module. In this case, however, you must program the operation of the SIGA-CR. The project settings for signal silence operation will not determine the operation of the audible appliances in this NAC.

Note also, that this application could be implemented with a SIGA-CC1S module. The SIGA-CC1S provides signal synchronization compatible with the operation of the G1M module.

The advantage to using a SIGA-CC1S module is that the NAC would then be synchronized with other NACs on the Signature data circuit.

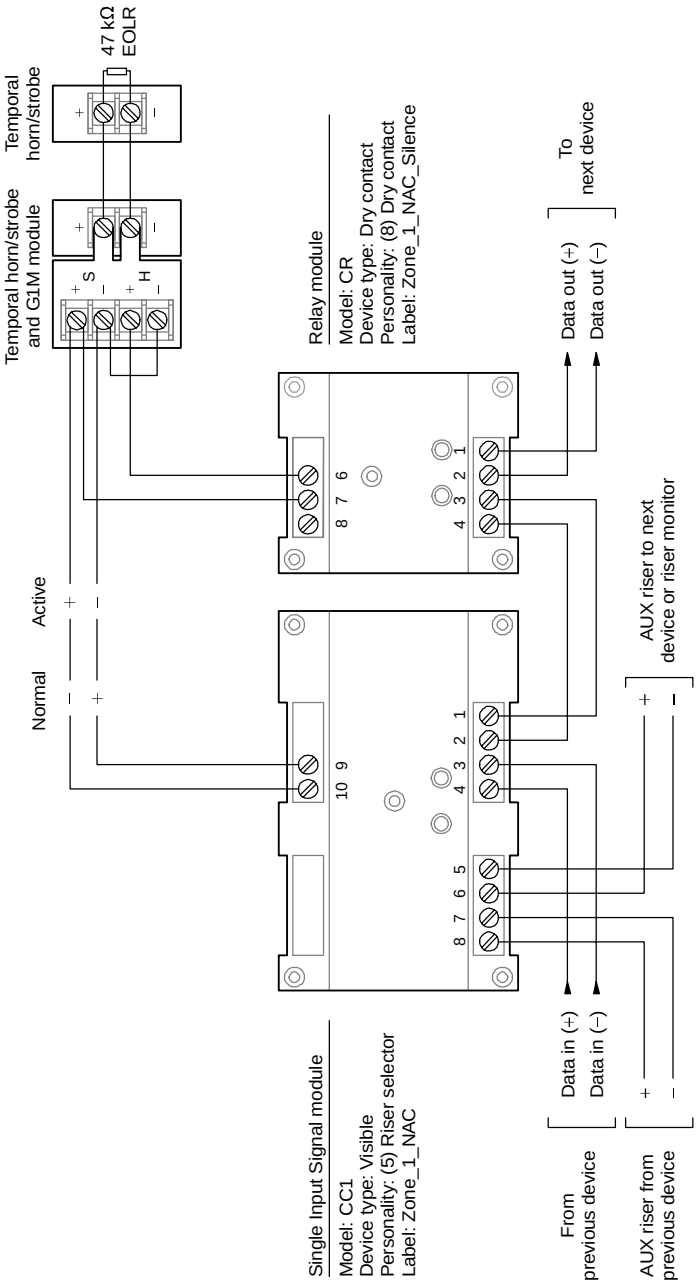

Figure 5-4: Typical SIGA-CC1 NAC wiring

Figure 5-5 shows an auxiliary/booster power supply being used to power the NAC, to provide synchronization, and to provide horn silence capability. Because the auxiliary/booster supply has the ability to silence the horn circuit, this application can be created using only the Signature loop wiring.

The SIGA-CT1 module monitors the power supply for AC failure. The SIGA-CR module signals the power supply to turn the horns on or off. The SIGA-CC1 module signals the power supply when the system goes into alarm, turning the NAC on.

Note that the power supply can only synchronize the notification appliances to which it is connected. If you need to synchronize several similar NACs on the same Signature loop, you can use a SIGA-CC1S module in place of the SIGA-CC1.

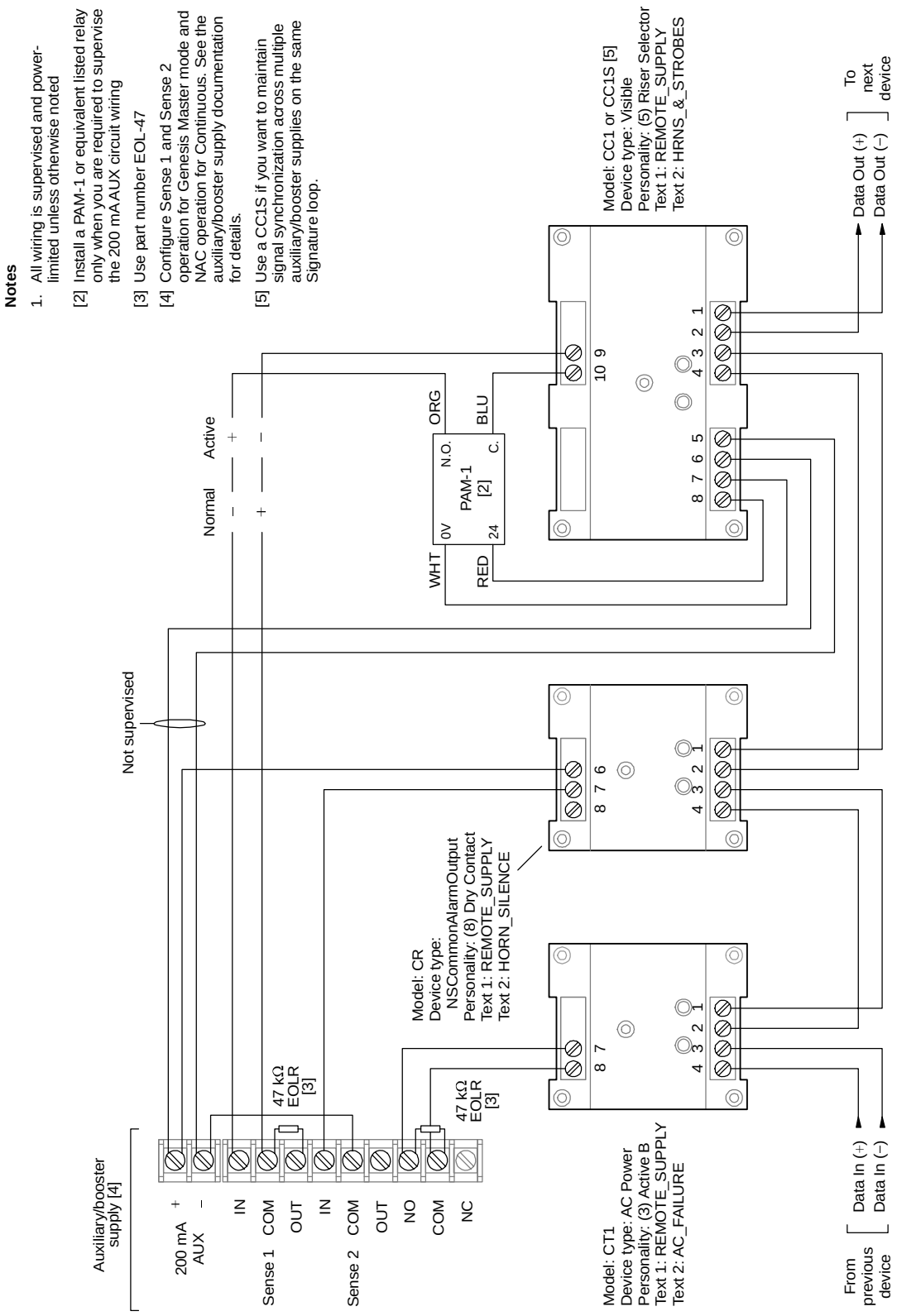

Figure 5-5: Using an auxiliary/booster supply to provide horn silence capability with two wires

Creating an initial startup version of the project database

Creating an initial startup version of the project database is useful for:

- Assigning panel addresses when you bring up a system for the first time
- Verifying the correct installation of the rail modules and control/display modules
- Adjusting the gain on the 3-ASU and amplifier modules installed in a cabinet

Follow these suggestions when creating an initial startup version of the project database:

Only include the hardware configuration for each cabinet in the system. Do not include any device loops in the database. These should be installed after verifying the cabinet configuration. It is also not necessary to configure any rail modules.

The easiest way to create an initial startup version of the project database is to save the project under a different name using the Save As command. Save the project as a different version after you have defined the cabinet chassis configuration and added all the rail modules for all the cabinets in the system. Using this method eliminates doubling your workload by having to edit two databases as you add cabinets to the system.

If the cabinet contains amplifiers and a 3-ASU, include the following features in the initial startup version of the project database:

- Program a control/display module toggle switch to send a 0.7 Vrms, 1 kHz tone to the amplifiers. Label the switch 1KHZ_TONE and add the following rule to the rules file:

```
[AMPLIFIER_SETUP]
SW '1KHZ_TONE':
   AMPON '*' TO 'Ch_Gen*',
   MSGON '1KHZ_TONE' TO 'Ch_Gen*';
```

- Record a message in the 3-ASU database labeled 1KHZ_TONE. Import the *Steady tone at 1kHz.wav* file from the EST3 Fire Alarm Support Tools CD-ROM into this record.

Note: For firmware versions earlier than 1.5, copy the *Steady tone at 1kHz.wav* file from the \Library\Sounds\FCCA directory on the EST3 Fire Alarm Support Tools CD-ROM to a directory on your hard drive that doesn't contain any other files. You can import the file from this directory.

If a CDR-3 Zone Coder is installed and connected to the AUX input on a 3-ASU, include the following features in the initial startup version of the project database:

- Program a control/display module toggle switch that is to turn on the amplifiers and select the Auxiliary channel. Label the switch AUX_INPUT_ADJUST and add the following rule to the rules file:

```
[3-ASU_AUX_INPUT_SETUP]
SW 'AUX_INPUT_ADJ':
   AMPON '*' TO 'Ch_Aux*';
```

System installation sequence

Follow these general instructions when installing a panel as part of an EST3 system. Refer to the installation sheets that came with the product for specific instructions. The *EST3 Installation Sheets* book contains copies of the installation sheets.

1. Install the equipment enclosure backbox at the required location and pull all the required conductors through the conduit into the backbox.
2. Verify the field wiring. Refer to Table 5-3.
3. Install the chassis assemblies that go into the panel.
4. Install the primary and booster power supplies.
5. Install all rail modules and control / display modules in their required locations.
6. Apply power to the panel. Refer to the topic “Cabinet power-up procedure” in Chapter 6.
7. Download an initial startup version of the CPU database, and clear panel troubles. See the topic “Creating an initial startup version of the project database,” later in this chapter.
8. Connect field wiring and clear any field wiring problems.
9. Download the final applications program. Refer to Chapter 6, “Power-up and testing.”
10. Disconnect the SDU from the panel.
11. Verify proper operation. Refer to the topic “Detector, input module, and output module testing” in Chapter 6.
12. Fill out a Certificate of Completion for the system. Example forms are included in Chapter 5.

Preliminary field wiring testing

We recommend that you test all circuits before they are connected to the control equipment. Table 5-3 indicates the recommended tests and acceptable test results.

Note: Individual devices are not checked as part of these tests. All equipment installed on field circuits must be individually tested to ensure proper operation when the system running.

Table 5-3: Field wiring tests

Circuit type	Test
DC notification appliance circuit	1. Measure the resistance between conductors. The circuit resistance should be infinite if no devices are installed on the circuit. The circuit resistance should be approximately 15 kΩ when the polarized notification appliances and the end-of-line resistor are correctly installed. 2. Reverse the meter leads. The circuit resistance between conductors should read approximately 10 Ω to 20 Ω. If the resistance reading is still approximately the same value when the meter leads are reversed, one or more polarized devices are installed incorrectly. 3. Measure the resistance between each conductor and earth ground. The resistance should be infinite.
Audio notification appliance circuit	1. Measure the resistance between conductors. The circuit resistance between conductors should be infinite if no devices are installed on the circuit. The circuit resistance should be approximately 15 kΩ when the polarized notification appliances and the end-of-line resistor are correctly installed. 2. Reverse the meter leads. The circuit resistance between conductors should still read approximately 15 kΩ. 3. Measure the resistance between each conductor and earth ground. The circuit resistance between a conductors and earth ground should be infinite.
Signature data circuits	1. With field wiring disconnected, verify the continuity of each conductor. Each conductor should measure less than 38 Ω. 2. Measure the resistance between conductors. The circuit resistance between conductors should be infinite if no devices are connected to the circuit. The circuit resistance between conductors should be between approximately 18 kΩ (250 devices) and 4.5 MΩ (1 device) when devices are installed. 3. Measure the resistance between each conductor and earth ground. The circuit resistance between a conductors and earth ground should be infinite.

Table 5-3: Field wiring tests

Circuit type	Test
Addressable analog circuits	1. Verify the continuity of each conductor. Each conductor should measure less than 50 Ω. 2. Measure the resistance between conductors. The circuit resistance between conductors should be infinite if no devices are connected to the circuit. 3. Measure the resistance between each conductor and earth ground. The circuit resistance between a conductors and earth ground should be infinite.
Traditional initiating device circuits	1. Verify the continuity of each conductor. 2. Measure the resistance between conductors. The circuit resistance between conductors should be infinite if no devices are connected to the circuit. The circuit resistance between conductors should be approximately 4.7 kΩ when devices are installed. 3. Measure the resistance between each conductor and earth ground. The circuit resistance between a conductors and earth ground should be infinite.
Telephone riser circuit	1. Verify the continuity of each conductor. Each conductor should measure between 0 and 25 Ω. 2. Measure the resistance between conductors. The circuit resistance between conductors should be infinite if no devices are installed on the circuit. The circuit resistance between conductors should be approximately 15 kΩ with SIGA-CC1 Single Input Signal Modules and the end-of-line resistor correctly installed. 3. Measure the resistance between each conductor and earth ground. The circuit resistance between a conductors and earth ground should be infinite.
RS-485 communication circuits	EST3 uses RS485 circuits for the: • Network data riser • Network audio riser • SAC bus 1. Verify the continuity of each conductor. Each conductor should measure between 0 and 50 Ω. 2. Measure the resistance between conductors. The circuit resistance between conductors should be infinite if no devices are connected to the circuit. The circuit resistance between conductors should be approximately 50 Ω when devices are installed. 3. Measure the resistance between each conductor and earth ground. The circuit resistance between a conductors and earth ground should be infinite.

Table 5-3: Field wiring tests

Circuit type	Test
RS-232 Communication Circuits	With both ends of the circuit disconnected: 1. Verify the continuity of each conductor. Each conductor should measure between 0 and 25 Ω. 2. Measure the resistance between conductors. The circuit resistance between conductors should be infinite. 3. Measure the resistance between each conductor and earth ground. The circuit resistance between a conductors and earth ground should be infinite.
Earth Ground	1. Measure the resistance between the earth ground terminal and a convenient water pipe or electrical conduit. The circuit resistance should be less than 0.1Ω

Chassis installation in EIA 19-inch racks

Each 3-CHAS7 chassis or 3-ASU(/FT) Audio Source Unit requires 12 inches (30.48 cm) of vertical rack space. 3/4 inch (1.9 cm) blank plates are required at the top of the upper chassis and the bottom of the lower chassis. A 1-1/2 inch (3.81 cm) blank plate is required between each chassis.

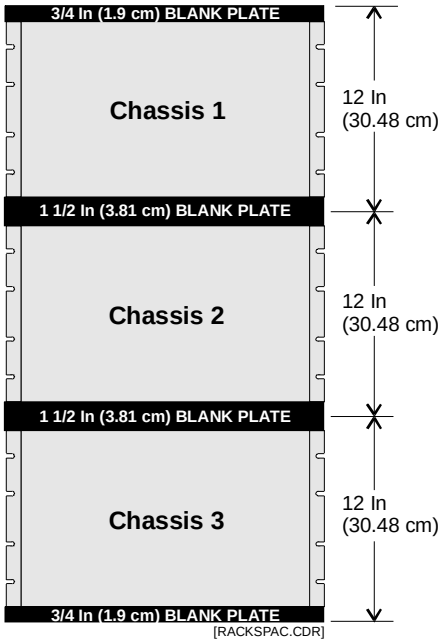

Figure 5-6: Rack-mounted chassis

ATCK Attack Kit for cabinets

EST3 supports several UL1635 certification installations. Each of these requires that an ATCK Attack Kit be attached to an RCC7R series control panel cabinet. The kit provides a two-minute attack delay time.

The ATCK kit lets you replace the standard, hinged outer door with a box cover that has no window. The cover attaches to the backbox sides using sheet metal screws and four locks.

The kit also includes special knockout locks that secure the unused knockout holes.

Follow the instructions shipped with the kit. In general, you'll need to:

1. Discard the standard door included with the cabinet.
2. For older cabinets, use the ATCK cover as a template to mark and drill screw holes. (New cabinets include the correct screw holes.)
3. Remove any unused knockouts and insert knockout locks.
4. Use the screws provided to attach the new cover.

Local rail module installation

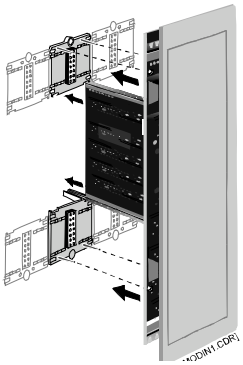

Please refer to the installation sheet that came with the product for installation instructions.

Equipment locations within a chassis are referred to as rail slots. Figure 5-7 indicates the rail slot numbers for the various cabinet sizes available in the EST3 product line. The CPU module must always occupy rail slots 1 and 2. The primary power supply monitor module should occupy rail slot 3.

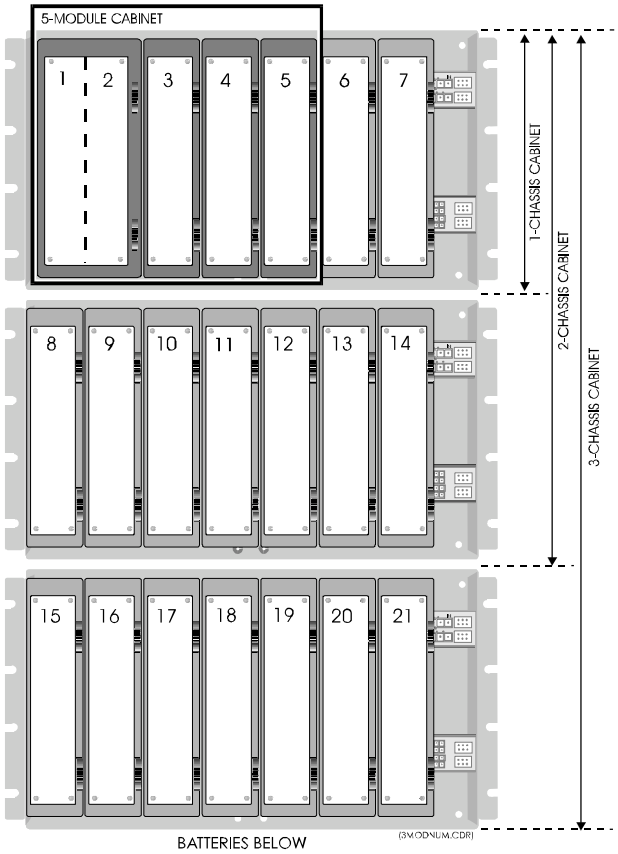

Figure 5-7: Local rail module slot identification

A 3-ASU Audio Source Unit occupies the first three slots on its chassis, and is identified using the lowest slot number of the three. When a Firefighters Telephone Control Unit is supplied as part of the 3-ASU/FT, the telephone control unit occupies the last four slots on the chassis, and is identified as the fourth slot number (11 or 18) on the chassis.

Connect the DC power cable (P/N 250187) to connector P2 on the power supply. For the 3-PPS Primary Power Supply, connect the 16-pin data ribbon cable (P/N 250188); (Booster = P/N 250189) to connector P3 on the power supply. For 3-BPS

Booster Power Supplies, connect a 14-pin data ribbon cable (P/N 250189) to connector P3 on the power supply. Route both cables up through the rails for later connection to the power supply/booster monitor module.

- Install any local rail module option cards required by your application. Option cards should be firmly seated in their connectors, and then secured to the rail module by pressing the snap rivet fastener.
- If a control/display module is required by your application, place the display in the recess on the front of the module. Secure the display with the four supplied plastic rivets. Install the display ribbon cable (P/N 250186) between the display's connector and the module's display connector. If no display is required, insert the blank plate supplied with the module.
- Locate the required rail slot positions on the rail chassis. Remember, the module location must match the location entered in the System Definition Utility program.
- Position the module so that any option card(s) rests in the card guides slot. Push the module toward the rails, sliding the daughter card into the slot.
- When the four alignment pins match up with the guide holes in the module, push the module in to firmly seat the module on the rail connectors.
- Push in the snap rivets to lock the module on to the rail.
- Plug in terminal strips can be removed from LRMs to facilitate field wiring.
- Close the module display door. Latch the door by sliding the upper latch down and the lower latch up.

Note: If there are empty rail spaces in a cabinet, you should consider installing 3-LRMF blank modules to fill up the spaces.

3-MODCOM Modem Communicator module

Features

The 3-MODCOM Modem Communicator is a local rail module that supports telephone line communication. It combines the functions of a dialer and modem in a single module.

The module has two eight-position modular jacks for connecting to telephone lines. It includes two red LEDs (DS1 and DS2) to annunciate line ringing and data exchange. The module accepts a control / display layer and has provision for a future expansion module.

A nonvolatile, flash memory chip stores customization data that includes account information, user identifiers, telephone numbers, and other dialing details.

The 3-MODCOMP is identical to the 3-MODCOM, but supports remote paging using the Telocator Alphanumeric Protocol (TAP). The 3-MODCOMP remote paging feature is supplemental and is not supervised.

Both versions of the module are equipped with a modem that is Bell 103 and V.32bis compliant. The modem includes support for these protocols:

- Contact ID
- SIA DCS
- SIA P2 (3/1 pulse format)
- SIA P3 (4/2 pulse format)
- TAP (3-MODCOMP only)

Several 3-MODCOMs (up to ten) can be installed in a network for increased reliability. These can be configured to provide dynamic failover operation.

You can program the 3-MODCOM in any of the following configurations:

- One-line dialer
- Two-line dialer
- Modem
- Modem and one-line dialer
- Modem and two-line dialer

The dialer circuit is compatible with pulse dialing or touch-tone (DTMF) dialing. The module can be configured to detect and answer any of these ring types:

- Any ring
- Normal ring
- Distinct ring 2 (type II)
- Distinct ring 3 (type III)

Note: Only Line 1 can be used to receive incoming calls.

Using the 3-MODCOM, messages can be sent to a central monitoring station (CMS) or received from remote computers.

When reporting to a CMS, alarm, trouble, and supervisory status data are transmitted as they occur. Each message identifies the point (or device or circuit) that is involved.

The 3-MODCOM can receive data from two programs: the Access Control Database program (ACDB) or the Keypad Display Configuration program (KDC).

ACDB and KDC information is downloaded on demand from remote computers. This lets the end users create and maintain their own security and access control databases.

Functions

Configuration

You create the required configuration data using the 3-SDU and download this data to the module using standard programming procedures. The data is stored in the nonvolatile memory of the 3-MODCOM.

Configuration data determines the setup of the 3-MODCOM, defines the line properties, the receiver attributes, and the account parameters. This data includes transmission details, such as telephone numbers and dialing options.

Some reference data relating to user access control and security systems is downloaded from the ACDB or KDC programs and stored in the 3-MODCOM.

Point transmission

Using enhanced communication protocols, the 3-MODCOM module is capable of transmitting data that identifies the specific device (or circuit) and event status, as reported by the CPU. This capability is known as point transmission because each and every device (or circuit) that goes into alarm or trouble, or is restored, can be reported by order of occurrence and priority.

Receiving user data

In addition to transmitting device data, the 3-MODCOM module can receive user data from remote computers. In this mode, the module receives access control or security database information from one or more end users. This data establishes the operating characteristics of the user's security and access control system as well as the various access options and PIN numbers. All downloaded data is received over the telephone lines.

The remote programs, ACDB and KDC, use passwords defined during 3-SDU programming to gain access to the 3-MODCOM.

At the start of the downloading process, a connection is established between the modem portion of the 3-MODCOM module and the ACDB or KDC program. Connection is over the telephone network.

The 3-MODCOM module receives data and transfers it to the CPU. The data is then routed via the 3-SAC to the CRC and KPDISP modules on the SAC bus. The data is stored in the nonvolatile flash memory chips of these devices.

Monitoring and diagnostics

Each line has a voltage monitor for detecting loss of telephone line during on-hook condition, and a current monitor for detecting the loss of telephone line and telephone line usage during off-hook conditions. Optical coupler circuits are used for these monitors.

Two red LEDs (DS1 and DS2) annunciate line ringing, in use, and fault conditions. States and explanations for DS1 and DS2 are given in the “Service and troubleshooting” chapter.

Equipment

3-MODCOM – Modem Communicator

The 3-MODCOM connects the EST3 system to the switched telephone network. The 3-MODCOM module is a single rail module with two eight-position modular jacks for connecting two loop-start lines. The 3-MODCOM module provides a control / display layer and space for a future expansion insert card.

The 3-MODCOM can support 255 accounts. It can communicate with 80 receivers in any of the following protocols:

- Contact ID
- SIA DCS
- SIA P2 (3/1 Pulse Format)
- SIA P3 (4/2 Pulse Format)

The 3-MODCOM is supplied with two seven-foot cables (P/N 360137). These are eight-conductor, flat telephone cables, with eight-position modular plugs on both ends. One end of the cable plugs into the 3-MODCOM. The other end plugs into an RJ-31X jack.

You must obtain the RJ-31X jack locally, and wire it to the telephone lines as indicated on the 3-MODCOM installation sheet.

3-MODCOMP – Modem Communicator with Paging

The 3-MODCOMP is identical to the 3-MODCOM except for the inclusion of the TAP paging protocol. The end user must subscribe to a TAP-compatible alphanumeric paging service.

Depending on the paging service provider, the TAP message can be broadcast via radio to a pager, converted to an e-mail, or faxed to an end user.

The module is supplied with two seven-foot cables (P/N 360137) for connecting the 3-MODCOMP to an RJ-31 jack. You must obtain the RJ-31X jack locally, and wire it to the telephone lines as indicated on the 3-MODCOM installation sheet.

RJ-31X jack – telephone company jack

An RJ-31X jack must be used to connect each line of the 3-MODCOM to the switched telephone network. One jack is required for each telephone line.

The jack is an eight-position jack with a special jumper between terminals 1 and 4 and 5 and 8. This jumper is in effect when the plug is removed from the jack.

Removing the plug re-establishes connection to the premises telephones. Inserting the plug opens the jumper and connects the 3-MODCOM, which provides a series connection to the telephones.

Refer to the 3-MODCOM installation sheet for a diagram of the jack wiring.

Note: Failure to use an RJ-31X jack violates FCC and NFPA regulations. A telephone connected directly to the incoming telephone line without the proper use of the RJ-31X jack will cause a telephone company trouble when used and possibly prevent the dialer from getting through to the CMS receiver in an emergency.

Configuration options

3-MODCOM and 3-MODCOMP can be configured as:

- One-line dialer
- Two-line dialer
- Modem
- Modem and one-line dialer
- Modem and two-line dialer

For UL listed or FM approved installations, you must configure the 3-MODCOM as a two-line dialer, and both lines must have supervision (line-cut detection) selected.

The 3-MODCOM operates in accordance with programmed instructions. Details of items such as telephone numbers, dialing

details, activation of a dialer test signal, etc., are all a part of the information that is downloaded into the nonvolatile memory of the 3-MODCOM by the SDU.

The 3-MODCOM electronically dials receivers in the central monitoring station (CMS) using either pulse or tone dialing, as specified during configuration. The module dials the stored CMS telephone number using the same digits that would be used if a person were dialing from the premises with an ordinary telephone.

Each time the 3-MODCOM sends test messages to the CMS, it indicates whether the system is in a normal or abnormal state. You can select which system states (such as *alarm*, *trouble*, or *monitor*) represent an abnormal condition. This prevents the 3-MODCOM from reporting an abnormal condition when the system is in a state that occurs frequently as part of normal system operation.

There are provisions for programming a periodic test transmission to the CMS station on a one-minute to 45-day basis. A daily test signal is primarily intended for certified installations, and is mandatory for all fire alarm installations.

The 3-MODCOM sends messages in order of their priority. Messages may include device and user ID information regarding events, such as openings, closings, alarms, and tamper or trouble events. The module waits for acknowledgement that each message sent has been received. .Where necessary, the 3-MODCOM can be configured to begin dialing without waiting for a dial tone. This option is used in areas where the telephone line has an absent or erratic dial tone.

Failover operation

You can create dynamic failover operation for 3-MODCOMs. By *dynamic failover* we mean that in the event of a communication failure or device trouble, the system switches from accounts on one 3-MODCOM to matching accounts on another 3-MODCOM.

Failover operation results in a system that is resistant to trouble arising from telephone lines, 3-MODCOMs, or the CPU module. The operation can be limited to a single panel, or can span two or more panels anywhere in a network.

In systems with a single 3-MODCOM you can include a second 3-MODCOM that acts as a redundant unit. In systems with two or more 3-MODCOMs, you can program the system so that the units back up each other, while still handling their normal traffic.

Failover operates by enabling and disabling various accounts defined for the project. On detection of a fault or trouble, project

rules disable accounts on the failed 3-MODCOM and enable matching accounts on the backup 3-MODCOM.

When a 3-MODCOM acts as a backup it still provides line supervision. Only the backup *accounts* are disabled. Further, backup units should conduct their own dialer tests, using unique accounts that identify the 3-MODCOM. Even when not in use, a backup unit should generate a trouble event if it cannot contact the assigned receiver.

Because of the way rules are processed, when the primary 3-MODCOM comes out of trouble, the accounts are automatically switched back to their normal state. Messages already queued for transmission in the backup unit will still be sent, even after backup accounts are disabled. Only new messages will be routed differently. This means that device activation and restoral messages sent to the CMS will still be properly paired.

Failover operation is created by specific configuration and programming steps. These are outlined below.

Configuration requirements

- For each primary 3-MODCOM add (or select) a backup 3-MODCOM in the same panel or in a different panel according to the scope of failover operation you need
- Configure the primary and backup 3-MODCOMs identically except for their labels and the labels of the accounts
- Label the accounts so that it’s easy to recognize the 3-MODCOM in which they are used
- Make sure each 3-MODCOM uses a unique account for dialer tests

Programming requirements

- Create message rules that send identical messages to both accounts
- On system startup, disable the accounts on the backup 3-MODCOM
- On activation of a panel comm fault, line fault, or LRM comm fault, disable the primary accounts and enable the backup accounts

ACDB requirements

Additional steps are required when the project includes reporting to a CMS that requires translation from a Cardholder ID to a cardholder name. In this situation, the ACDB user must enter a User ID (name) for both CMS Accounts (the primary and backup accounts).

These entries are made on the System tab of the Cardholder tab. The ACDB user should enter a User ID for each CMS Account.

Compatibility

EST3 versions

The 3-MODCOM Module will operate with EST3 Version. 3.0 or above. Do not use this communication module with earlier versions.

Receiver compatibility

Refer to the *EST3 ULI/ULC Compatibility Lists* (P/N 3100427), for a list of compatible receivers.

Transmission protocols

The 3-MODCOM is capable of transmitting messages in five formats, or protocols:

- Contact ID
- SIA DCS
- SIA P2 (3/1 Pulse Format)
- SIA P3 (4/2 Pulse Format)
- TAP (3-MODCOMP only)

All formats consist of short, predefined messages. Most contain several parameters, some of which are optional. Check with your dialer receiver and central monitoring station software provider for the exact structure they require.

When programming transmissions, remember that device messages require two separate send commands, one for activation, and one for restoration.

Contact ID: numeric messages with several parameters including event code, partition, and device or user. The format is:

[EventCode] [Partition] [DeviceNumber | User]

SIA DCS: ASCII text messages that include a number of optional parameters, including time, date, user, partition, and device. The format is:

[Date] [Time] [UserID] AlarmCode [Device | User | Partition]

SIA P2 (3/1): numeric messages that consist of four digits. These contain the account number (three digits) and the alarm code (one digit). The format is:

AccountNumber AlarmCode

The is no standard assignment of alarm codes and meanings. Obtain the codes used by your CMS.

SIA P3 (4/2): numeric messages that contain two numbers and no other parameters. The format is:

EventCode

TAP: consists of two fields separated by a carriage return (CR). The first field is the User ID. The second field is the text message that will be displayed on an alphanumeric pager. Message length, including User ID and CR is 60 characters. The format is:

User [CR] Message [Location]

No standards describe the content of the message. Typically, you'll use the device location message, as displayed on the LCD module. Check with your paging service provider to ensure they accept the TAP protocol and determine any message limitations.

Transmission process

The 3-MODCOM includes features that provide an appreciable level of transmission integrity. Multiple telephone lines and multiple telephone numbers help to ensure that a call to the receiver gets through. The 3-MODCOM module sequences through the following basic steps to contact the central monitoring station receiver.

1. The 3-MODCOM seizes one of the telephone lines and puts the line on-hook for a minimum of three seconds.

   This cuts off any ongoing call and disconnects the line from any telephone or dialing devices that are connected downstream.

   Note: The module tries to select an unused line for its first two attempts.

2. The 3-MODCOM takes the line off-hook and waits for a dial tone.

   LED DS1 or DS2 lights steadily.

   If a dial tone is not received by the configured time, the module goes on-hook, increments the attempt counter, and continues to alternate lines and numbers until a dial tone is acquired.

   If the 3-MODCOM is configured with two telephone numbers and only one telephone line, it will make four attempts using the first telephone number, then four attempts using the second telephone number. This alternation of telephone numbers continues as needed until a connection is made or the configured number of dial attempts have been made.

Note: In areas where the telephone system has no dial tone, or where the dial tone is erratic, you can set the 3-MODCOM to dial without waiting for a dial tone. This is called *blind call dialing*

3. The 3-MODCOM dials the CMS using the programmed dialing mode and telephone number.
4. The 3-MODCOM waits for a handshake message from the CMS indicating that a connection has been established.

   If a handshake is not received within 40 seconds the module puts the telephone line on-hook and waits for the configured period.

   After the wait, steps 2 through 4 are repeated. If the module is still unable to contact the receiver it seizes the other telephone line.

   The module repeats two attempts on the other telephone line. If still unable to contact the receiver it switches back to the first telephone line and attempts to contact the receiver using the secondary telephone number.

   If still unable to contact the receiver the module continues to alternate lines and numbers until the configured maximum number of attempts have been reached.

   If the maximum number of attempts is reached, the module sends a trouble message to the CPU.

   The 3-MODCOM retries the full number of attempts if another event is activated or make one attempt if a configured period (Wait Time Between Attempts) expires.
5. When the call is completed, ringing is detected by the CMS dialer-receiver (DACR). The DACR goes off-hook and transmits a handshake.
6. If the handshake matches the desired transmit format, the 3-MODCOM transmits, in the specified format, all premises event data.

   LED DS1 or DS2 flashes rapidly to indicate data is being transmitted.
7. The 3-MODCOM waits for an acknowledgement and a shutdown signal from the CMS receiver, then puts the line on-hook, ending the call.

   LED DS1 or DS2 extinguishes.

Programming considerations

Accounts and receivers

In addition to the general operating characteristics of the 3-MODCOM, you'll need to specify each account and receiver used by the system. You may want to gather this information before you begin using the SDU.

A *receiver* is a destination for a 3-MODCOM call to a CMS. Typically, a CMS will have many receivers in operation, each capable of receiving multiple calls. The CMS will determine which receiver you should use for each account. For configuration purposes, here's what you'll need to specify about the receiver:

- Label
- Description
- Primary telephone number
- Secondary telephone number
- Protocol to use
- Maximum number of dial attempts
- Wait time between dial attempts

An *account* links a specific end user to a specific receiver. Each message sent from the 3-MODCOM includes an account number assigned by the CMS. This identifies the user site sending the message and the receiver to which the message is sent. For each account you'll need to define:

- Label
- Description
- Receiver to use
- Account number (as assigned by the CMS)
- Dialing test interval and time of day

Several accounts may use the same receiver, but each account is assigned to only one receiver.

Events and commands

One event and two commands are particularly important when you create SDU rules for the 3-MODCOM. These are: activation, activate, and send.

Security and access control devices do not send event messages to the CPU. Rather, they send requests to execute predefined command lists. You need to define the command lists and assign the correct command list for each security or access control event.

Activation: an event that lets you define a command list.

Activate: a command that lets you execute a command list in a rule.

Send: a command that sends a message to a CMS through the 3-MODCOM.

Installation

Caution: Prior to installation, remove power from the rail.

To install the 3-MODCOM, you'll need to follow these general steps:

1. Arrange suitable telephone company lines and services.
2. Install the 3-MODCOM on the rail.
3. Connect the 3-MODCOM to the telephone company lines.
4. Download configuration data from the 3-SDU.
5. Make test transmissions to verify proper operation.

Requirements for telephone lines

3-MODCOM dialers can be used for most applications that use telephone lines, the exceptions being:

- The central station telephone number cannot be dialed directly (using access numbers and area code where necessary) without operator interception of the call
- Multiparty service (a party line) exists
- Operator assistance is required to complete a telephone call and a foreign exchange cannot be introduced
- Connection is not established within 38 seconds following completion of dialing

The 3-MODCOM dialer circuit is compatible with any switched telephone network that employs direct dialing (local) and Direct Distance Dialing (DDD), without operator interception of the call.

Operator interception occurs in some areas where message billing is not completely automatic. Where operator interception is involved, you must obtain a foreign exchange (FX) connection must from the central station exchange to the exchange serving the customer. The FX provides a local number for calling the central station without toll billing. A WATS or ground-start line connection must not be used for this purpose because the line cannot be supervised.

The 3-MODCOM includes a feature that prevents jamming by an incoming telephone call. The feature is based on a telephone service option referred to as *called party disconnect*. This option lets the receiver of a call disconnect by hanging up the telephone

for a period of time, even if the caller stays on the line. The time required for disconnect varies in different areas, but is usually between 18 and 90 seconds. Called party disconnect is available in most areas. To determine whether called party disconnect control is available in the area to be served, consult the local telephone company.

In areas not having called party disconnect, the 3-MODCOM module is vulnerable to jamming by an incoming call. To minimize the possibility of jamming, we recommend that the customer order a separate, unlisted number for exclusive use of the 3-MODCOM module. The customer should keep this number confidential. In the case of the two-line dialer, two premises telephone numbers would have to be busied by incoming calls to jam the system.

Progressive anti-jamming measures would entail the use of one unlisted telephone number, or two unlisted numbers for maximum dialer integrity.

The 3-MODCOM must be connected to the incoming line *ahead* of all connected equipment on that line, but just behind the demarcation block. This puts the control unit telephone connection in series, assuring that all telephones, answering machines, and FAX machines are disconnected during dial-out to the CMS. This requirement is necessary so the 3-MODCOM dialer circuit can seize the line for its exclusive use in the event of an alarm.

Do not use a telephone line that is considered essential for conducting business at the site. Use a separate line for the 3-MODCOM. The dialer must be the first connection in line, and it seizes the line and disconnects all other equipment when making a call.

If the incoming lines to the protected premises involve a rotary telephone line arrangement, make the connection to the line having the highest number. This will create the least interference with business lines.

Note: If connection will be made to a telephone company line that is also used for normal business purposes, advise customer that the telephone service will be disrupted for a few minutes during the connection period.

In areas where the telephone company requires that their own connector block be installed, it should be wired as per the USOC RJ-31X or RJ-38X configuration. (The RJ-38X configuration is identical to RJ-31X except for a jumper between 2 and 7 which is used in some residential applications but is not used by the 3-MODCOM.)

When the 3-MODCOM is configured as a two-line dialer module, two incoming lines must be used and connections must be made to each line.

Installing the 3-MODCOM module

Make sure that panel power is off, then proceed as follows,

1. Use an antistatic wrist strap to ground yourself to an unpainted part of the cabinet.
2. Carefully remove the 3-MODCOM from the antistatic bag in which the module is packed. Always handle it by the edges or by the plastic door.
3. Place the bag on a flat work surface, then place the module, connector side up, on the empty bag.

   Check for shipping damage. Orient the module so the two eight-position modular telephone jacks are on the top.
4. If a control / display module is needed, remove the blank front plate and attach the ribbon cable to the front of the 3-MODCOM board.
5. Refer to the SDU cabinet report to determine the proper location for the module, then plug the module into the rail.

   Be careful to align the module and rail sockets so that the pins are in the proper holes and that seat the module firmly.
6. Fasten the module in place with the push-pins.
7. Restore power to the panel.
8. Install wiring to module as described on the 3-MODCOM installation sheet.

Connecting the 3-MODCOM to a telephone line

Plug one end of the supplied telephone connecting cord (P/N 3601370) into the telephone company line jack on the 3-MODCOM.

Do not plug the other end into the RJ-31X jack until you are ready to test the system. This prevents unnecessary interference with other equipment connect to the line downstream.

When you are ready for final connections and testing, use the telephone company line jacks as follows:

Line 1 jack	Line 2 jack
Single-line dialer Incoming modem line	Second line of 2-line dialer

For the installation of a fire alarm system in compliance with NFPA 72, the 3-MODCOM must be connected to loop-start

telephone lines. If the site has ground-start lines, two separate loop-start lines must be installed for the dialer.

To determine the type of telephone company line, disconnect the line pair and connect the lines to a test meter.

If the line is equipped for loop-start, the meter should read 48 to 52 Vdc between the lines.

If the line is equipped for ground-start, the meter will read 0 Vdc between the lines, 48 to 52 Vdc between one line and ground, and 0 Vdc between the other line and ground.

Note: AT&T Horizon PBX systems and some Type 75 systems are of the loop-start type. AT&T Dimension PBX systems and other Type 75 systems are equipped for ground-start.

If this installation is for a certified fire alarm system or a burglar alarm system in compliance with NFPA 72, the telephone company line must be of the *called party disconnect* type (also called timed-release disconnect). This feature permits the communication module to seize the line and dial out, even when the telephone company line is in use.

To determine the whether the telephone line supports called party disconnect

1. Have someone telephone the premises from the outside.
2. Hang up the telephone that received the call, but have the individual who placed the call remain on the line.
3. After 40 seconds, pick up the called telephone again.
    - If you are no longer connected to the caller
    - If the caller is still on the line

Loading configuration data

After installing the 3-MODCOM, use the SDU network downloading process to load the configuration data for the 3-MODCOM.

The SDU provides a report that lists all CMS codes that can be transmitted from the 3-MODCOM. Give this report to the appropriate CMS.

Testing transmission

After the CMS has programmed the central monitoring database, perform transmission tests as required by the AHJ and CMS.

Note: Transmission failures are latched at the panel. This means that you must reset the panel in order to clear them.

3-SAC Security Access Control module

Product description

The 3-SAC is a high-speed RS-485 module used to support Card Reader Controller modules and Keypad Display modules. Events are passed to the 3-SAC module, then passed to the CPU for alarm processing.

The 3-SAC has two sets of circuit terminals, and is capable of Class A or Class B configuration. Each Class B circuit can handle 31 devices, for a total of 62 devices per module. Class A circuits can handle 30 devices total.

SAC bus

The 3-SAC Security Access Control module supports the SAC bus, an RS-485 communication line. When properly constructed, the SAC bus runs over longer distances, supports more drops, and is more immune to noise than an RS-232 line.

The SAC bus consists of two lines:

- SAC bus +
- SAC bus –

Recommended cabling

Since our security and access control devices require 24 Vdc, we suggest that you always use a four-wire cable for the SAC bus and a 24 Vdc power supply.

For the data wires we suggest unshielded, twisted pair, with greater than 6 twists per foot, in 14 to 22 AWG (1.50 to 0.25 sq mm).

For the power wires, we recommend 14 or 16 AWG.

Additional power supply wiring

When an additional power supply is required, you must connect a circuit common point for correct operation. To establish a circuit common, connect the –24 Vdc terminal on the additional power supply to the –24 Vdc terminal of the last device. This circuit common must be connected to the panel, to every device, and to the circuit common point of any additional power supplies.

3-AADC1 Addressable Analog Driver Controller and IRC-3

When upgrading an IRC-3 system to EST3, the 3-AADC1 Addressable Analog Driver Controller module lets you use existing IRC-3 system segments without rework.

The 3-AADC1 can be connected to an existing IRC-3 Remote Zone Interface Module (RZB(V/N)12-6/3) or a Universal Input Output Module (UIO-12).

The 3-AADC1 Addressable Analog Driver Controller module provides one Class A or Class B loop. This loop becomes the data communication line for the existing IRC-3 system.

The 3-AADC1 includes a line interface module (LIM) card. You can also use the LIM card from an existing 3-AADC module by installing it on a 3-AADC1-MB. The MB version is a local rail module without a LIM card.

The audio features of the EST3 system can be connected to the audio riser channels of the RZB module, or existing audio equipment can be left in place.

Similarly, the EST3 system power supplies can provide 24 Vdc power to the RZB or UIO cards, or existing power supplies can be left in place.

Refer to the following installation sheets for wiring details:

- *3-AADC1 and 3-AADC1-MB Addressable Analog Driver Controller Installation Sheet*
- *RZB(V/N)12-6/3 Remote Zone Interface Module Installation Sheet*
- *UIO-12 Universal Input Output Module Installation Sheet*

AC power and DC battery wiring

Due to power-limited/nonpower-limited wiring separation requirements, it is easier to route and wire the nonpower-limited AC power and battery conductors before installing the LRMs in the rails. Nonpower-limited wiring should be routed to the chassis notches to the left and rear of the cabinet. Power-limited wiring should be routed to the right and front of the cabinet.

WARNING: Do not energize power until instructed to do so!

1. Connect the AC power source to TB1, line, neutral, and ground terminals on the 3-PPS/M Primary Power Supply Heat Sink and the 3-BPS/M Booster Power Supply Heat Sink(s). DO NOT ENERGIZE THE AC POWER SOURCE AT THIS TIME!
2. Connect the positive battery lead to TB2-1 and the negative battery lead to TB2-2. Each heat sink assembly must have its own pair of 12 AWG (2.5 sq mm) wires going to the battery. Do not connect the heat sinks assemblies together and run a common wire to the battery! DO NOT TERMINATE THE WIRES AT THE BATTERY AT THIS TIME.

WARNING: Do not connect batteries until instructed to do so!

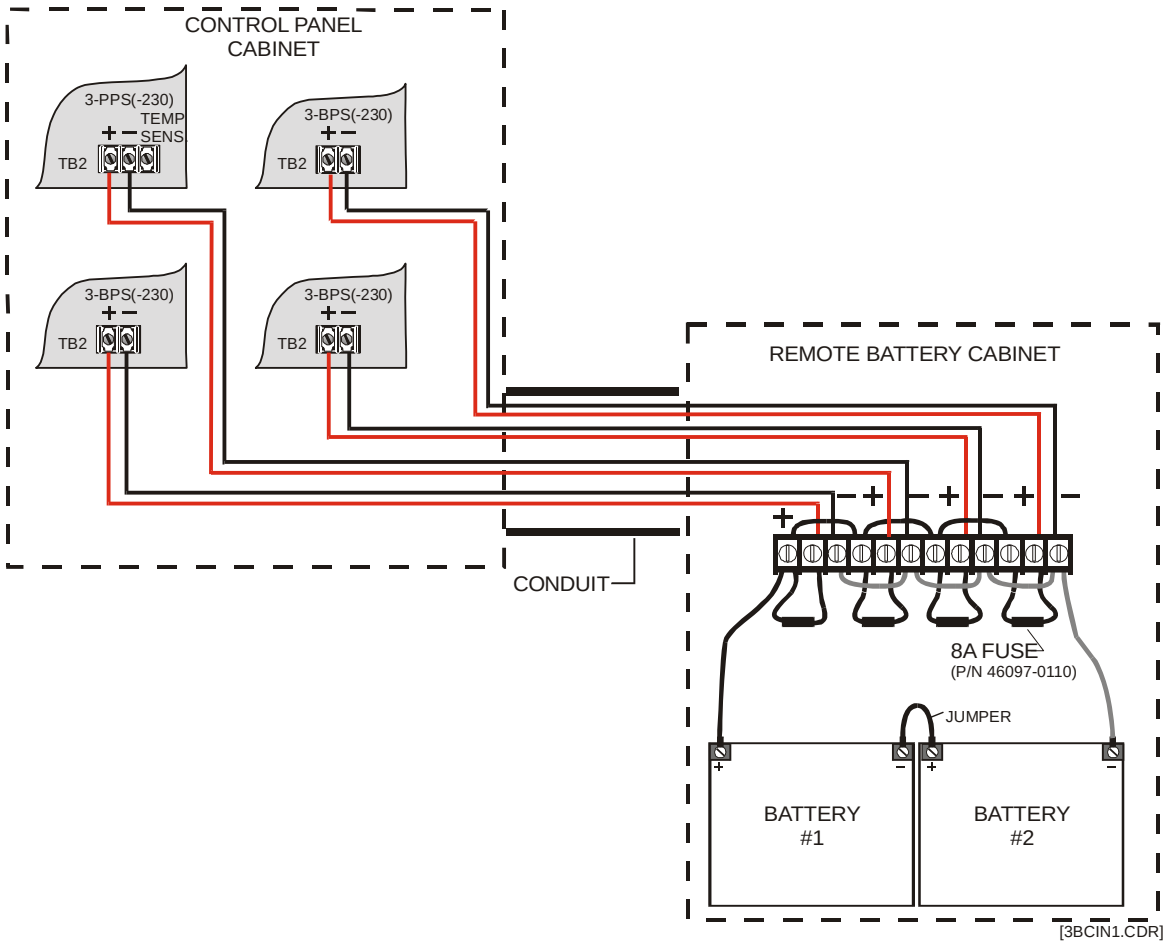

Figure 5-8: Remote battery cabinet wiring

Note: A minimum of a 10Ah battery must be used in all systems applications.

Connecting auxiliary/booster power supplies

UL requires that you monitor secondary power sources for loss of AC power. Upon loss of AC power, the control panel must provide an audible and visible trouble signal. In addition, remote station, central station, and proprietary-type protected premises units must transmit a trouble signal off-premises after a one- to three-hour delay.

To meet UL requirements you need to connect a SIGA-CC1 (or SIGA-CC1S) and a SIGA-CT1 to the booster supply. The SIGA-CC1 is used to activate the booster supply and to signal common troubles. The SIGA-CT1 is used to signal booster supply AC power failures.

Installation

Mount the SIGA-CC1 and SIGA-CT1 inside the booster supply as described in the booster supply's technical documentation and wire them as shown in Figure 32.

Configuration

Booster supply

Set SW2-6 to ON. This configures the booster supply's Trouble relay to close only on loss of AC power. All other booster troubles are signaled through the sense circuits.

Note: In Figure 32, the booster supply is configured so that Sense 1 controls all four NACs. For DIP switch settings for this and other booster supply configurations, refer to the booster supply's technical reference manual.

Signature modules

Configure the Signature modules as described below.

Module	Properties
SIGA-CC1	Model = CC1 Device Type = CommonAlarmOutput Personality = (5) Riser Selector Text 1 = REMOTE_SUPPLY Text 2 = SENSE_1
SIGA-CT1	Model = CT1 Device Type = ACFail Personality = (3) Active B Text 1 = REMOTE_SUPPLY Text 2 = AC_FAILURE

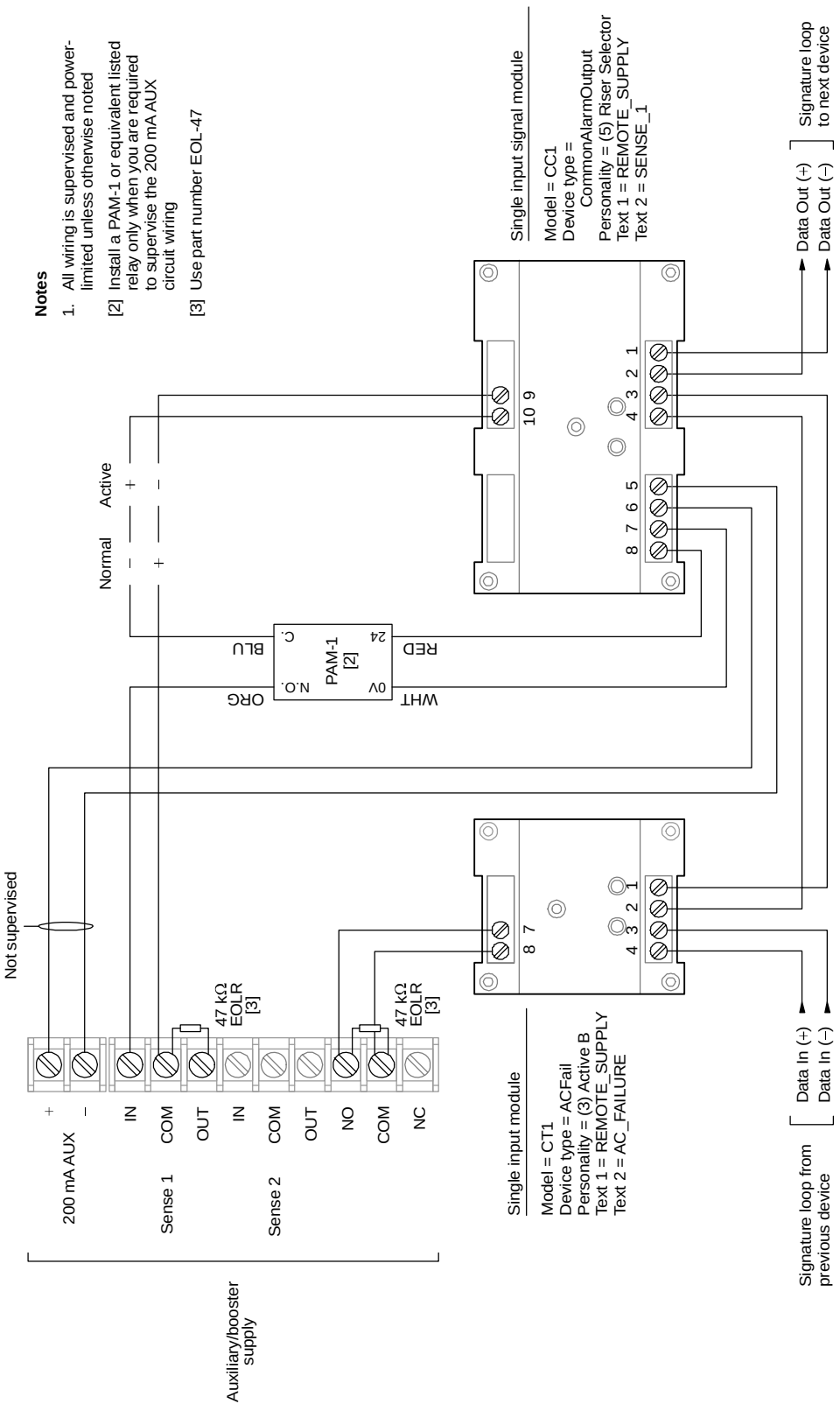

Figure 5-9: Typical booster power supply wiring

Connecting the PT-1S impact printer

The PT-1S impact printer can be connected to an EST3 panel to provide a hard copy printout of system status, active events, panel reports, etc. The PT-1S is a 80-character line width, freestanding printer that uses standard form feed paper.

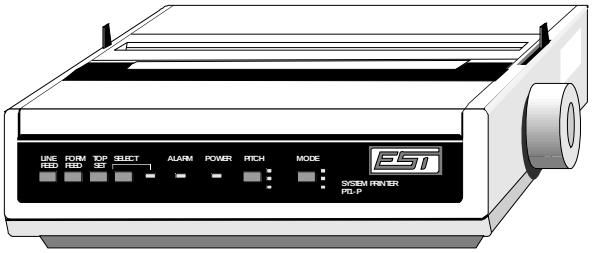

ICPT1SXCDR

When connecting the PT-1S impact printer by itself:

- Configure the serial port as a Printer port type and set the baud rate for the printer's baud rate.
- Set printer switches SW1-1, -2, and -3 to OFF, ON, and ON, respectively (8 bits, no parity).

When connecting the PT-1S impact printer to a serial port that is shared with a CDR-3 Zone Coder:

- Use an IOP3A to connect both devices. Refer to the topic "Connecting a CDR-3 Zone Coder for coded tone output" later in this chapter.
- Configure the panel's serial port as a CDR-3/Printer port type and set the baud rate for the CDR-3's baud rate.
- Set printer switches SW1-1, -2, and -3 to OFF, OFF, and ON, respectively (8 bits, even parity). These are the factory settings.
- Set printer switches SW2-1, -2, and -3 to match the baud rate set on the CDR-3 zone coder.

PT-1S Printer Specifications

Dimensions (HWD)	3.2 in x 14.2 in x 10.8 in (8.13 cm x 36 cm x 27.4 cm)
Print Speed	232 Characters/Second
Baud Rates	110, 300, 600, 1200, 2400, 4800, 9600, 19200 bps.
Wiring	3 #18 AWG (0.75 mm^2)
Voltage	120 Vac @ 60 Hz
Standby Power	40 VA

Printing Power	120 VA

Switch DIPSW factory settings (located on main board)

SW1	SW2	SW3	SW4	SW5	SW6	SW7	SW8
OFF (English)	OFF (English)	OFF (English)	OFF (11-in form)	ON (11-in form)	OFF (auto LF off)	ON (8 bits)	OFF (enable front panel)

Switch SW1 factory settings (located on serial board)

Switch	Factory Setting	Description
SW1-1	OFF	ON: Odd parity OFF: Even parity
SW1-2	OFF	ON: No parity OFF: With parity
SW1-3	ON	ON: 8 bits OFF: 7 bits
SW1-4	OFF	ON: Ready/Busy protocol OFF: XON/XOFF protocol
SW1-5	ON	ON: Circuit test OFF: Monitor test
SW1-6	ON	ON: Print mode OFF: Test mode
SW1-7, -8	ON,ON	OFF,OFF: SSD Busy OFF,ON: SSD Busy ON,OFF: RTS Busy ON,ON: DTR Busy

Switch SW2 factory settings (located on serial board)

Switch	Factory Setting	Description
SW2-1, -2, -3	OFF,OFF,ON	OFF,OFF,OFF: 110 bps ON,OFF,OFF: 300 bps OFF,ON.OFF: 600 bps ON,ON,OFF: 1200 bps OFF,OFF,ON: 2400 bps ON,OFF,ON: 4800 bps OFF,ON,ON: 9600 bps ON,ON,ON: 19200 bps
SW2-4	OFF	ON: DSR active OFF: DSR inactive

Switch SW2 factory settings (located on serial board)

Switch	Factory Setting	Description
SW2-5	ON	ON: 32-byte buffer threshold OFF: 256-byte buffer threshold
SW2-6	ON	ON: 200ms busy signal OFF: 1s busy signal
SW1-7	OFF	ON: Space after power on OFF: Space after printer select
SW1-8	OFF	not used

System printer power supply

If your PT-1S system printer is required to operate during a brownout or AC power failure, install an uninterruptible power supply per Figure 5-10.

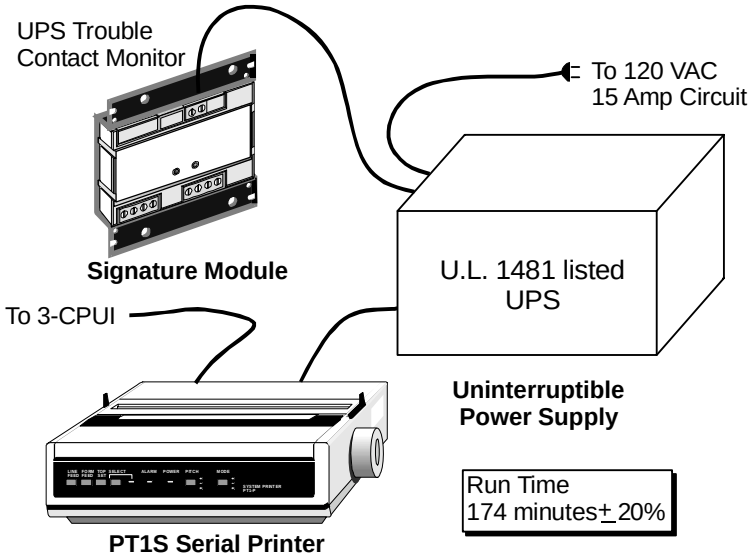

Figure 5-10: Printer uninterruptible power supply wiring

Adjusting amplifier output levels

What you will need

An initial startup version of the project database that contains a 1kHz tone and a switch programmed to turn the tone on. See "Creating an initial startup version of the project database."

An RMS voltmeter (Fluke 83 or equivalent)

Adjustment procedure

1. Disconnect the field wiring to all the zoned amplifier modules in the cabinet.
2. Place an RMS meter across an amplifier's TB2 NAC/B+ and NAC/B- terminals.
3. Use the 1KHZ_TONE switch to turn on the tone.
4. Adjust the amplifier's gain pot until the RMS meter displays the configured output level (25 or 70 Vrms).
5. Connect the amplifier's field wiring.
6. Use the 1KHZ_TONE switch again and verify that the output level remains the same. Readjust the amplifier's gain pot if necessary.
7. Disconnect the amplifier's field wiring.
8. Repeat steps 2 through 6 for each amplifier in the cabinet.
9. Reconnect the field wiring for all the amplifiers in the cabinet.

Design considerations

Your audio system will work best if the prerecorded tones and messages have roughly the same volume, or amplitude. The process of establishing a common maximum amplitude is sometimes called *normalizing.*

We suggest that you normalize your tones and messages to a maximum amplitude of 1 V peak-to-peak, or an average of 0.7 Vrms.

The SDU does not contain a tool for normalizing your audio clips, so you'll need to use a sound editor to normalize the clips before you import them into the SDU database.

The audio clips included in the EST3 Support Library CD have already been normalized.

Connecting a CDR-3 Zone Coder for coded tone output

The CDR-3 Zone coder can be connected to the 3-ASU's AUX input to provide a coded or march time tone to the audio system. Refer to Figure 5-11. If you're connecting a CDR-3 to a serial port that is shared with a PT-1S printer, you must connect both devices using an IOP3A, as shown in the wiring diagram in this topic.

What you will need

An initial startup version of the project database that contains a switch programmed to turn the amplifiers onto the Auxiliary channel. See "Creating an initial startup version of the project database."

An RMS voltmeter (Fluke 83 or equivalent)

Adjusting the gain on the 3-ASU auxiliary input

The 3-ASU auxiliary input gain adjustment is critical to the operation of this application. Before adjusting the 3-ASU, set each zoned amplifier module in the cabinet for their configured RMS output level. See "Adjusting amplifier output levels."

To adjust the gain on the 3-ASU auxiliary input

1. Connect the coded tone output on the CDR-3 directly to the 3-ASU auxiliary input by bypassing the duration relay.
2. Set the 3-ASU auxiliary input gain pot to the mid-range position.
3. Determine which zoned amplifier module requires the highest gain adjustment (the module whose gain adjustment pot is turned the most counter-clockwise). Use this amplifier as the worst-case amplifier.
4. Disconnect the field wiring from all the amplifiers in the cabinet except for the worst-case amplifier. This is to prevent the CDR-3's supervisory tone from being broadcast throughout the premises.
5. Place an RMS meter across the worst-case amplifier's TB2 NAC/B+ and NAC/B- terminals.
6. Press the AUX_INPUT_ADJ switch. This places the coder's supervisory tone onto the Auxiliary channel. The supervisory tone occurs approximately every 5 seconds.
7. Adjust the 3-ASU's auxiliary input gain pot until the RMS meter displays the amplifier's configured output level (22-28

Vrms or 65-75 Vrms). Turning the pot clockwise increases the gain while counter-clockwise decreases the gain.

8. Press the AUX_INPUT_ADJ switch a second time to restore the input.
9. Reconnect the coded tone output of the CDR-3 back through the duration relay.
10. Reconnect the field wiring to the remaining amplifier modules.

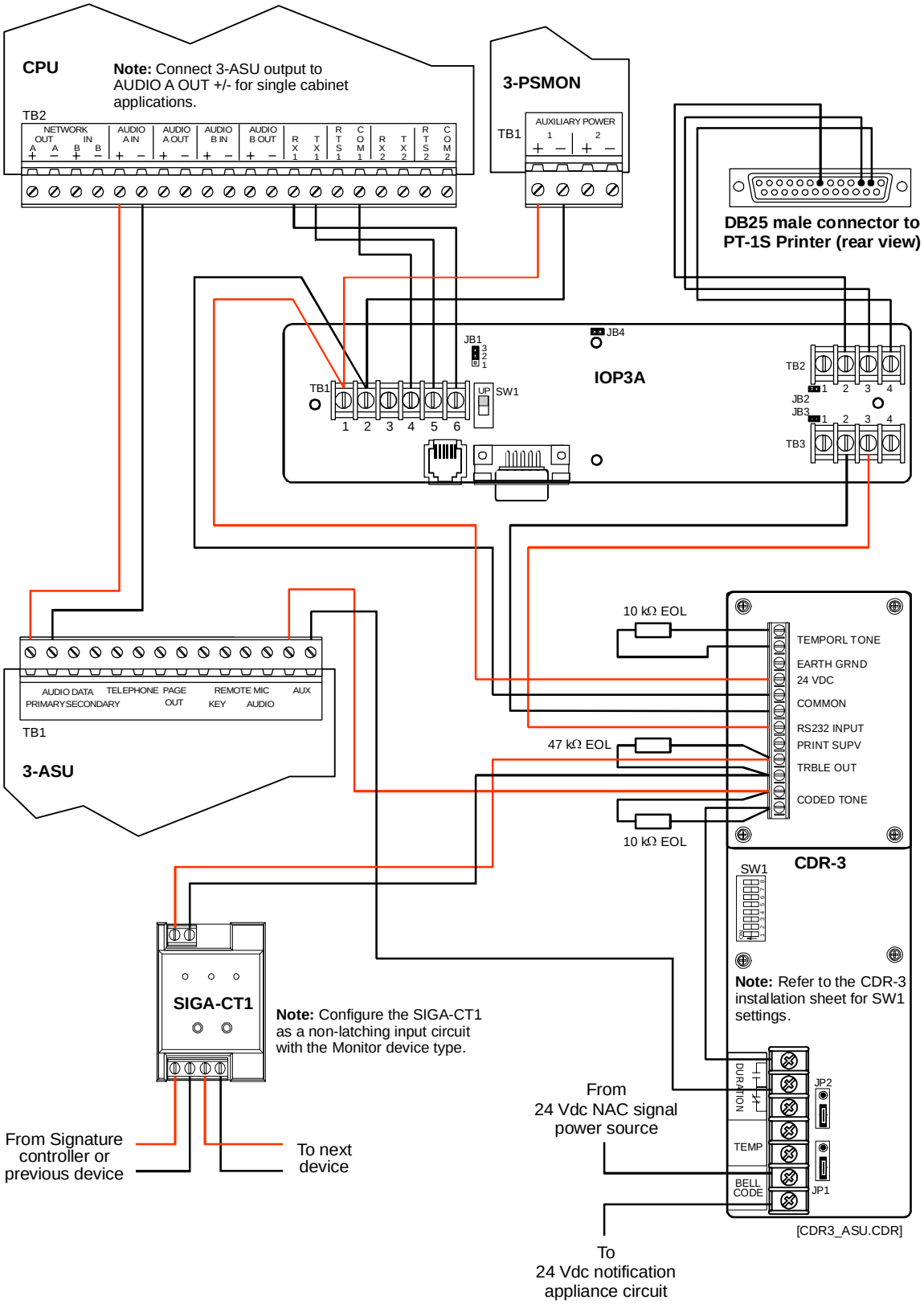

Figure 5-11: Application wiring diagram

Connecting an external modem for use with the Remote Diagnostics Utility

Using the Remote Diagnostics Utility requires that you connect an external modem to a CPU equipped with a 3-RS232 option card.

Some applications may require that the modem be permanently mounted. The following is a suggested method for mounting a modem connected to the CPU. First you will need to obtain the following parts

- MFCA accessory enclosure
- SIGA-MP1 mounting plate
- 2 cable ties long enough to go around the modem and through the slots on the SIGA-MP1

To mount the modem:

1. Mount the MFCA enclosure back box at an acceptable location within reach of the panel. Refer to Figure 5-12.
2. Secure the modem to the SIGA-MP1 with the 2 cable ties.
3. Screw the SIGA-MP1 to the MFCA enclosure back box.
4. Connect all modem wiring. Refer to the technical documentation that came with the modem for wiring connections.

   RS-232 wiring must maintain a 1/4-in minimum separation between nonpower-limited wiring.
5. Screw the MFCA cover to the back box.
6. Attach the modem RS-232 wires to the CPU serial port terminals. The serial port must be configured for Remote Diagnostics in the project database. See below.

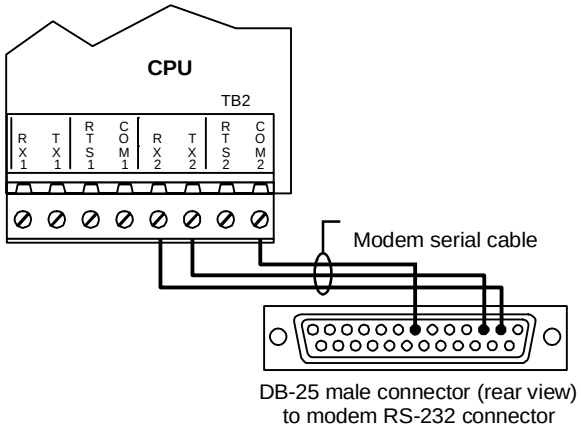

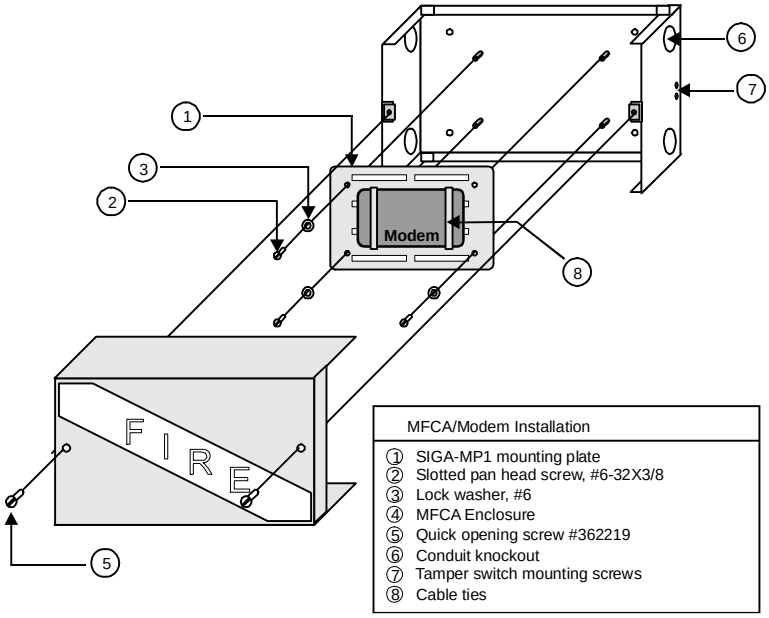

Figure 5-12: Suggested modem installation using MFCA and SIGA-MP1

Running the RPM and distributing profiles

The Resource Profile Manager (RPM) is an add-on tool that works with the SDU. The RPM lets you:

- Create a description of the companies and buildings at a site
- Assign security and access control devices to companies and buildings
- Specify a primary company (owner) for each CRC
- Allocate device resources among companies that share the devices

This information is displayed in a two-pane window that includes a tree structure and a data table. The tree structure shows the organization of companies and buildings and the assignment of partitions and devices to the buildings. The data table shows the labels, properties, and allocation numbers for the current tree selection. You could think of this as the overall resource profile for the project.

The RPM lets you export resource profiles for individual companies. These are later imported into the Access Control Database (ACDB) and Keypad Display Configuration (KDC) programs.

Once imported, the profiles determine what the users see and control when creating their portions of the security or access control system.

To create and distribute resource profiles, you follow these general steps:

1. Enter company and installer contact information.
2. Create buildings and assign them to companies.
3. Assign partitions and devices to the buildings for each company.
4. Allocate device resources to each company.
5. Export a resource profile for each company.

The RPM includes a Mass Assign function to help you establish a uniform baseline allocation of resources. A Summary display is available so you can review and print the profile in several different forms.

When your project includes security or access control applications, run the RPM and distribute resource profile diskettes to the ACDB and KDC users.

Refer to the *SDU Online Help* for details on these steps. Refer to the *Card Reader Controller (CRC) Technical Reference Manual* for details on configuring CRCs.

Chapter 6

Power-up and testing

Summary

This chapter provides information and procedures necessary to perform initial system power-up and acceptance testing.

Content

Cabinet power-up procedure • 6.3
- Initial power-up • 6.3

Runtime and system errors • 6.4
- Introduction • 6.4
- Runtime errors • 6.4
- System errors • 6.5

Initial and reacceptance test procedures • 6.6
- Introduction • 6.6

Control and emergency communications equipment testing • 6.7
- Primary power supplies • 6.7
- Booster power supplies • 6.7
- CPU with LCD module • 6.8
- 3-RS232 card installed in CPU • 6.10
- 3-RS485 card installed in CPU, Class B configuration • 6.10
- 3-RS485 card installed in CPU, Class A configuration • 6.11
- 3-IDC8/4 Initiating Device Circuit module • 6.11
- 3-SSDC(1) Signature Driver Controller module • 6.11
- 3-AADC(1) Addressable Analog Driver Controller module • 6.12
- 3-OPS Off-premises Signaling module • 6.12
- 3-ASU Audio Source Unit • 6.14
- 3-FTCU Firefighter Telephone Unit • 6.14
- 3-ZAxx Audio Amplifiers • 6.16
- Control/display modules • 6.16
- Amplifier transfer panel (ATP) • 6.17

Detector, input module, and output module testing • 6.18
- Signature Series detectors and bases on a 3-SSDC(1) module circuit • 6.18
- Addressable analog detectors on a 3-AADC(1) Module circuit • 6.19
- Traditional 2-wire smoke detectors connected to 3-IDC8/4 modules • 6.19
- Conventional 2-wire smoke detectors connected to SIGA-UM modules • 6.20
- Signature series input modules • 6.20
- Signature series output modules • 6.20

Initiating device testing • 6.21
- Manual stations • 6.21
- Nonrestorable heat detectors • 6.21
- Restorable heat detectors • 6.21

Waterflow switches • 6.21
Notification appliance testing • 6.23
Visual devices • 6.23
Speakers • 6.23
Bells and horns • 6.23
Record of completion • 6.24

Cabinet power-up procedure

Initial power-up

1. Energize AC power at 3-PPS/M (-230) Power Supply and the 3-BPS/M (-230) Booster Power Supplies.
2. Connect batteries to the 3-PPS/M (-230) Power Supply and the 3-BPS/M (-230) Booster Power Supplies.

   While the CPU's microprocessor is initializing, the LCD displays status messages.
3. Connect the download cable assembly between the SDU computer and CPU connector J5.
4. Using the SDU, download the CPU database into the panel controller. Refer to the next topic, "Runtime and system errors," should error messages be displayed on the LCD module.
5. If an Audio Source Unit is part of the system, its database must be downloaded in addition to the CPU database. For best download performance, we suggest you connect directly to the 3-ASU/FT module and download its database in single-step mode.
6. Clear up any network communications faults between cabinets.
7. If any Signature controller modules are installed as part of the system, their individual databases must be downloaded in addition to the CPU database. You will need to restart the network for these changes to be effective.
8. Correct all the circuit faults.
9. Test the system as described in the next section.

Note: Remember that for a network system, you'll need to make the initial download to each CPU separately, to establish the correct cabinet numbers. After the initial download, all further downloads can be made from a single panel via the network.

Runtime and system errors

Introduction

There are two major categories of errors which can occur when configuring a database for the network. The System Definition Utility program is used to set up the contents of each cabinet. Once all the cabinets have been defined, devices labeled, and rules written, all this information is cross checked against itself. This process is called compiling the program. If there are incorrectly written rules, unreferenced input or output devices or other problems with the design, the compiler will generate a list of errors. These errors must be corrected using the SDU.

When the data has been properly compiled, the data is in a form that the CPU memory can receive. Sending this information to the memory of the various CPUs making up the network is called downloading. If an error occurs during the download process, it is referred to as a runtime error.

Runtime errors

There are a number of reasons that errors may occur when downloading data into the CPU controllers. Initially, certain “errors” are to be expected, as the network database is loaded in steps. Until all portions of the database are properly entered into memory, errors will be generated. During initial system configuration, this is to be expected. Most of these errors will resolve themselves as the system configuration progresses.

A second source of download errors is a mismatch between the cabinet configuration in the SDU and the actual hardware installation. The most common cause for this error is typically due to the installation of a local rail module in the wrong rail position. Another common cause is the installation of the wrong type module in the rail. Misidentification of an entire cabinet can also cause this type of error.

A third source of download error can occur after the cabinets have been initially downloaded. After the initial downloads, all subsequent downloads can be done using the network data circuit. The third type of error is primarily caused by communications problems between cabinets.

Table 6-1: Download errors

Error message	Possible cause
Unable to perform operation	General error. Restart CPU
Busy signal	System currently busy. Wait, then retry
Password Invalid	Incorrect or invalid password entered
Size parameter trouble	Check download connections and SDU settings, then retry
Storage media trouble	Problem with memory components. Swap module and retry.
Checksum error in packet	Check download connections and SDU settings, then retry
Device type error	Conflict between SDU download setting and connected device type
Parcel #	Check download connections and SDU settings, then retry
Inaccessible panel	SDU program cannot “see” the panel. Check network wiring
Session in progress	System is busy. Wait, then retry
Write protect	Write protect switch on 3-ASUMX is on
Erase program trouble	Check download connections and SDU settings, then retry
Block number	Check download connections and SDU settings, then retry
Version mismatch	Firmware downloaded does not agree with version setting

Note: If you are experiencing frequent problems downloading to a 3-CPU, low signal levels from the SDU computer may be the cause. The Buffered RS-232 Communications Cable, P/N SDU-CBL, may be used to correct signal level problems. Do not use this cable with the CPU.

System errors

The CPU does not send data to the SDU program. Except for problems with the communications between the CPU and the PC running the SDU program, the majority of problems with the runtime process are annunciated on the LCD module’s display. Refer to Chapter 5, “Service and Troubleshooting” for system error codes and their possible causes.

Initial and reacceptance test procedures

Introduction

Once the system has been wired, programmed, and the circuit faults corrected, all installed components should be tested *as a system*, to insure proper operation.

The initial system check is designed to verify that all components of the system are installed and operating as designed. Verifying that the system was designed and installed according to specifications requires all aspects of the system to be exercised and the results verified. Where test results differ from those expected, corrective action must be taken.

Before commencing testing, notify all areas where the alarm sounds and off-premises locations that receive alarm and trouble transmissions that testing is in progress.

Records of all testing and maintenance shall be kept on the protected premises for a period of at least five (5) years.

Required Tools:

- Slotted screwdriver, insulated
- Digital multimeter
- 12inch (30.5 cm) jumper lead with alligator clips
- Panel door key

A complete check of installed field wiring and devices should be made at regular intervals, in accordance with NFPA 72 and ULC 524 requirements. These requirements are covered in the chapter on preventive maintenance.

Control and emergency communications equipment testing

The procedures listed in the following sections should be performed on the equipment installed in each cabinet connected to the system. These procedures are designed to test the hardware and its installation. The applications programming will be tested later.

Note: The network configuration information must be downloaded into the network and Audio Source Unit, using the *System Definition Utility* (SDU) program, before starting testing.

Primary power supplies

1. Verify that all components are installed using accepted workmanship standards.
2. Verify adequate separation between power-limited and nonpower-limited wiring. Refer to NFPA 70, article 760, of the National Electrical Code.
3. Verify that the installed batteries are the proper capacity for the application.
4. With the batteries disconnected, verify that the supply's full alarm load can be sustained by the power supply without the batteries connected.
5. With the batteries connected, disconnect the AC source and verify that a power supply trouble is annunciated, and that the supply's full alarm load can be sustained by the batteries.
6. Verify that the battery charger properly charges the batteries connected to both the primary and booster power supplies to 80% capacity within 24 hours.

Booster power supplies

1. Verify that all components are installed using accepted workmanship standards.
2. Verify adequate separation between power-limited and nonpower-limited wiring.
3. Verify that the installed batteries are the proper capacity for the application.
4. With the batteries *disconnected*, verify that the supply's full alarm load can be sustained by the power supply without the batteries connected.
5. With the batteries connected, disconnect the AC source and verify that a power supply trouble is annunciated, and that the supply's full alarm load can be sustained by the batteries.

CPU with LCD module

1. Verify the module is properly seated in all four rail connectors and secured with the four snap rivets. Verify that removable terminal strips TB1 and TB2 are firmly seated.
2. Verify that all components are installed using accepted workmanship standards.
3. Verify that the correct date and time are displayed on the LCD module's display, and the Power LED is on.
4. Activate the lamp test and verify all lamps operated as follows:

   Select the Command Menus button to obtain the Main Menu screen.

   Select Test to obtain the Test Menu screen, then select Lamp Test.
5. Initiate a fire alarm and verify the following: the alarm LED flashes, the Alarm relay transfers, the correct device message appears at the top of the LCD window, the active point counter increments, the event sequence indicates a "1," the active Alarm events counter at the bottom of the display indicates A001, the event type indicates fire alarm, and the local panel buzzer sounds.

   Press the Alarm Silence switch and verify that the required notification appliances are silenced and the Alarm Silence LED lights.

   Press the Panel Silence switch to verify that the panel buzzer silences and the Panel Silence LED lights.

   Press the Alarm queue switch and verify that the Alarm LED lights steady.

   Press the Details switch and verify that the alarm device's message, if any, is displayed. If a printer is connected to the CPU, verify that all specified information appears on the printer.
6. Initiate a second fire alarm and verify that: it appears at the bottom of the LCD window, the active point counter changes, the event sequence indicates a "2," the active Alarm events counter at the bottom of the display indicates A002, the event type indicates fire alarm, the Alarm LED flashes again, the local panel buzzer resounds, and the *first* Alarm message remains at the top of the LCD window. Press the Alarm queue switch and verify that the Alarm LED lights steady.
7. Initiate a third fire alarm and verify that: its message appears at the bottom of the LCD window, the active point counter

changes, the event sequence indicates a “3,” the active Alarm events counter at the bottom of the display indicates A003, the event type indicates fire alarm, and the local panel buzzer resounds, and the first alarm message remains at the top of the LCD window. Press the Alarm queue switch and verify that the Alarm LED lights steady.

8. Use the previous and next message switches to verify that you can scroll through all three messages in the alarm queue, as indicated by the event sequence window.
9. Press the Reset switch. Verify that all initiating devices reset and that all panel indicators clear except the power LED.
10. Initiate an active Monitor condition and verify that: the Monitor LED flashes, the correct active Monitor device message appears in the top and bottom windows of the LCD, the active point counter changes, the event sequence indicates a “1,” the active Monitor events counter at the bottom of the display indicates M001, and the event type indicates Monitor. Press the Monitor queue switch and verify that the Monitor LED lights steady. Initiate a second active Monitor condition and verify that the first Monitor message remains at the top of the LCD window, that the second Monitor event message appears at the bottom of the display, the active point counter changes, the event sequence indicates a “2,” the active Monitor events counter at the bottom of the display indicates M002.
11. Initiate an active Trouble condition and verify that: the Trouble LED flashes, the correct active Trouble device message appears in the top and bottom windows of the LCD, the local panel buzzer sounds, the Trouble relay transfers, the active point counter changes, the event sequence indicates a “1,” the active Trouble events counter at the bottom of the display indicates T001, and the event type indicates Trouble. Press the Trouble queue switch and verify that the Trouble LED lights steady. Press the Panel Silence switch to verify the panel buzzer silences and the Panel Silenced LED lights. Initiate a second active Trouble condition and verify that the first Trouble message remains at the top of the LCD window, that the second Trouble event message appears at the bottom of the display, the active point counter changes, the event sequence indicates a “2,” the active Trouble events counter at the bottom of the display indicates T002.
12. Initiate an active Supervisory condition and verify that the Supervisory LED flashes, the correct active Supervisory device message appears in the top and bottom windows of the LCD, the local panel buzzer sounds, the Supervisory relay transfers, the active point counter changes, the event

sequence indicates a “1,” the active Supervisory events counter at the bottom of the display indicates S001 and the event type indicates Supervisory. Press the Supervisory queue switch and verify that the Supervisory LED lights steady. Press the Panel Silence switch to verify the panel buzzer silences and the Panel Silenced LED lights. Initiate a second active Supervisory condition and verify that the first Supervisory message remains at the top of the LCD window, that the second Supervisory event message appears at the bottom of the display, the active point counter changes, the event sequence indicates a “2,” the active Supervisory events counter at the bottom of the display indicates S002.

13. Initiate an active fire Alarm, verify that alarm LED flashes, the correct fire alarm message appears in the top and bottom windows of the LCD the active point counter changes, the event sequence indicates a “1,” the active fire alarm events counter at the bottom of the display indicates A001 and the event type indicates fire alarm. Press the Alarm queue switch and verify that the Alarm LED lights steady. Press the Panel Silence switch to verify the panel buzzer silences and the Panel Silenced LED lights. Initiate a second fire Alarm condition and verify that the first fire Alarm message remains at the top of the LCD window, that the second fire Alarm event message appears at the bottom of the display, the active point counter changes, the event sequence indicates a “2,” the active fire alarm events counter at the bottom of the display indicates A002.
14. Press the Reset switch and verify that all devices reset and the panel returns to the normal condition.

3-RS232 card installed in CPU

1. Verify the card is properly seated in its connector and secured with the snap rivet.
2. Verify that the baud rate of the peripheral device connected to the port matches the port setting as set using the SDU program.
3. Check the printer operation by initiating an active condition on the system or generating a system report via the keypad.

3-RS485 card installed in CPU, Class B configuration

1. Verify the card is properly seated in its connector and secured with the snap rivet.

2. Starting with the network in the normal condition, use the status command to verify all connected cabinets are communicating over the network.
3. Disconnect the network data communications wiring (TB2-17/18 & 19/20) from the cabinet with the primary LCD module, and verify that all the other system cabinets connected to the network appear in the trouble queue.

3-RS485 card installed in CPU, Class A configuration

1. Verify the card is properly seated in its connector and secured with the snap rivet.
2. Starting with the network in the normal condition, use the status command to verify all connected cabinets are communicating over the network.
3. Disconnect the network data communications wiring (TB2-17/18 & 19/20) from the cabinet with the primary LCD module and verify that a Class A network communications fault is annunciated. Repeat step 2 to verify that all connected cabinets still communicate over the network.

3-IDC8/4 Initiating Device Circuit module

1. Familiarize yourself with the circuit configuration of the individual module to be tested. Remember, modules of the same type can be configured differently.
2. For circuits configured as initiating device circuits (IDCs), activate the circuit by shorting the circuit's two terminals. Verify that the appropriate message appears in the proper message queue. Disconnect the circuit or EOL resistor. Verify that a Trouble message appears in the Trouble message queue.
3. For circuits configured as Notification Device Circuits (NACs), turn on the circuit by activating an IDC programmed to turn on the NAC, or use the activate output device command via the keypad. Verify that the circuit activates properly. Restore the circuit. Disconnect the circuit or EOL resistor. Verify that a Trouble message appears in the Trouble message queue.

3-SSDC(1) Signature Driver Controller module

1. Verify that the module is properly seated in both rail connectors and secured with the two snap rivets. Verify that removable terminal strips TB1 and TB2 are firmly seated.

2. Verify the wiring to all Signature devices.
3. Map the SDC circuit by reading the device data; adjusting, modifying, and accepting devices as required; writing the information back to the devices; and rereading the device data.
4. With no map errors displayed, put an input device on the circuit in the active mode, and verify the appropriate message is displayed on the LCD module. Put the input device in the Trouble mode and verify that the correct Trouble message is displayed.

Note: Individual device testing will be done later.

3-AADC(1) Addressable Analog Driver Controller module

1. Verify that the module is properly seated in both rail connectors and secured with the two snap rivets. Verify that removable terminal strip TB1 is firmly seated.
2. Verify the wiring to all addressable analog devices.
3. Read the addressable analog circuit device data; adjusting, modifying, and accepting devices as required; writing the information back to the addressable analog module.
4. With no errors displayed, put an input device on the circuit in the active mode, and verify the appropriate message is displayed on the LCD module. Put the input device in the Trouble mode and verify that the correct Trouble message is displayed.

Note: Individual device testing will be done later.

3-OPS Off-premises Signaling module

1. Verify that the module is properly seated in both rail connectors and secured with the two snap rivets. Verify that removable terminal strip TB1 is firmly seated.
2. Familiarize yourself with the configuration of the module to be tested.
3. If the module is connected to a municipal box or central station, advise the appropriate parties that testing is in progress.

4a. Local Energy Municipal Box (City-Tie) configuration: With the municipal box connected between TB1-2 and TB1-3, open the circuit. (Note: You can temporarily substitute a 15Ω, 2W resistor for the municipal box.) Verify that the module Trouble activates and the appropriate Trouble message appears in the Trouble message queue. Reconnect

the circuit and initiate an active fire alarm. You should measure 20 to 25 volts between TB1-3 (+) and TB1-4 (-). Press the panel Reset switch, and wait for the system to reset. Verify receipt of the alarm at the municipal receiving station.

Note: If you activate the municipal box, it will indicate Trouble until rewound.

4b. Single Reverse Polarity Circuit (Old Style) configuration: Verify that 20 to 25 volts appears between TB1-5 (+) and TB1-6 (-), paying attention to polarity. Create a Trouble condition on the panel. Verify that 0 volts appears between TB1-5 (+) and TB1-6 (-). Verify that the module's Trouble relay activates, the appropriate Trouble message appears in the Trouble message queue, and that the receiving station receives the Trouble indication. Open the circuit wired between TB1-5 and TB1-6. Verify that the receiving station receives the Trouble indication.

Initiate an active fire alarm. You should measure 20 to 25 volts between TB1-5 (-) and TB1-6 (+), paying attention to the polarity change. Verify receipt of the alarm at the municipal receiving station.

4c. Three Reverse Polarity Circuit (New Style) configuration: Verify that 20 to 25 volts appears between TB1-5 (+) & TB1-6 (-), between TB1-7 (+) & TB1-8 (-), between TB1-9 (+) & TB1-10 (-), paying attention to polarity. Create a Trouble condition on the panel. Verify that 20 to 25 volts appears between TB1-8 (+) and TB1-8 (-). Verify that the module's Trouble relay activates, the appropriate Trouble message appears in the Trouble message queue, and that the receiving station receives the *Trouble* indication. Open the circuit wired between TB1-5 and TB1-6. Verify that the receiving station receives a *circuit fault* indication. Open the circuit wired between TB1-7 and TB1-8. Verify that the receiving station receives a *circuit fault* indication. Open the circuit wired between TB1-9 and TB1-10. Verify that the module's Trouble relay activates and the appropriate Trouble message appears in the Trouble message queue, and that the receiving station receives a *circuit fault* indication.

Initiate an active fire alarm. You should measure 20 to 25 volts between TB1-5 (-) and TB1-6 (+), paying attention to the polarity change. Verify receipt of the alarm at the municipal receiving station.

Initiate an active Supervisory condition. You should measure 20 to 25 volts between TB1-9 (-) and TB1-10 (+), paying attention to the polarity change. Verify receipt of the Supervisory condition at the municipal receiving station.

3-ASU Audio Source Unit

1. Verify that the 3-ASU is installed using accepted workmanship standards.
2. The audio sub-system messages and configuration information must be downloaded into the Audio Source Unit, using the System Definition Utility (SDU) program, before starting testing. Verify that the 3-ASUMX expansion card, if used, is firmly seated in its connector.
3. Verify the wiring to all devices.
4. Starting with the network in the normal condition, use the Status command to verify all amplifiers are communicating over the network.
5. Disconnect the network audio communications wiring (TB1-1/2) from the 3-ASU, and verify that all the audio amplifiers connected to the network appear in the Trouble queue. Restore the connection.
6. If a supervised remote microphone is used, disconnect the remote microphone wiring (TB1-11 & TB1-12) from the 3-ASU. Verify a remote microphone trouble is annunciated.
7. Press the All Call switch on the front of the 3-ASU. Verify the All Call LED next to the switch lights. Remove the microphone from its bracket, press the Push-To-Talk (PTT) switch. Verify that that the preannouncement tone (if configured) sounds, followed by the Ready to Page LED lighting. Speak into the microphone and verify that the Page Level Meter is operational, and the message is being transmitted over all speakers.

3-FTCU Firefighter Telephone Unit

1. Verify that the 3-FTCU is installed using accepted workmanship standards.
2. Verify the wiring to all devices. The SIGA-CC1 should be set to personality code 6.
3. Verify that the 3-FTCU display indicates: “0 Calls Pending” and “Unit: OK.”
4. Take the master handset off-hook. Verify that the display indicates: “Handset off hook..” Replace the master handset on-hook.
5. Take a firefighter telephone off-hook (plug a phone in a phone jack). Verify that the incoming call buzzer sounds, the display indicates “1 Calls Pending,” the location of the incoming call is displayed in reversed text, and “0 calls connected” is shown on the display. Silence the buzzer by

pressing the ACK switch. Press the Connect switch. Verify that the display indicates: “0 calls pending,” “1 calls connected,” and the location of the connected call is displayed in reversed text. Converse over the phone connection to verify clear, noise free communications.

Take a second firefighter telephone *on a different circuit* off-hook. Verify that the incoming call buzzer sounds, the display indicates “1 Calls Pending,” the location of the incoming call is displayed in reversed text, and “1 calls connected” is shown in the display. Silence the buzzer by pressing the ACK switch. Press the Connect switch. Verify that the display indicates: “0 calls pending,” “2 calls connected,” the location of the second connected call is displayed in reversed text, the location of the first call is displayed in normal text below the second call location. Converse over the phone connection to verify clear, noise free communications.

Press the Review Connected switch, moving the reversed text to the first call’s location message. Without hanging up the first telephone, press the Disconnect switch. Verify the display indicates: 1 Calls Pending,” the location of the call being disconnected is displayed in reversed text at the top of the screen, and “1 calls connected” is shown in the display. Hang up the first telephone. Verify that the display indicates: “0 Calls Pending” and “1 calls connected.”

6. Repeat Step 5, connecting five (5) phones simultaneously, and verify acceptable voice quality.

7. Press the All Call and Page by Phone switches on the 3-ASU Audio Source Unit. When the Ready to Page LED lights *steady*, speak into the telephone still connected, and verify that the telephone’s audio is distributed throughout the facility. Press the Disconnect switch on the 3-FTCU, and hang up the master and remote phones.

8a. *Class A telephone riser configuration:* Disconnect the telephone riser wiring (TB1-2 & TB1-2) or (TB1-3 & TB1-4) from the 3-FTCU, and verify that a riser trouble message appears in the Trouble queue. Take a firefighter telephone off-hook (plug a phone in a phone jack). Verify that the incoming call buzzer sounds, the display indicates “1 Calls Pending,” the location of the incoming call is displayed in reversed text, and “0 calls connected” is shown in the display. Restore the connection.

8b. *Class B telephone riser configuration:* Disconnect the telephone riser wiring (TB1-1 & TB1-2) from the 3-FTCU, and verify that a riser trouble message appears in the Trouble queue. Restore the connection.

9. Disconnect each phone station/jack station, and verify that a Trouble message appears in the Trouble queue. Restore the connections.

3-ZAxx Audio Amplifiers

1. Verify that the module is properly seated in both rail connectors and secured with the two snap rivets. Verify that removable terminal strips are firmly seated.
2. Verify that the 3-ASU is installed using accepted workmanship standards.
3. If wired with a backup amplifier, verify that the backup amplifier's wattage is equal to or greater than the wattage of any primary amplifier it can replace. If mixing 15-, and 30-watt amplifiers with 20-, and 40-watt amplifier modules, make sure the back up amplifier is 20 or 40 watts, whichever is required.
4. Verify that the EVAC and Page signals are available at the speakers
5. Create an amplifier fault. Verify backup amplifier substitution.
6. *Class B amp output configuration:* Disconnect the module's audio output wiring (TB2-7 & TB2-8) from the 3-ZAxx, and verify that the appropriate amplifier Trouble message appears in the Trouble queue. Restore the connection.
7. *Class B supplementary NAC output configuration* (3-ZA20 & 3-ZA40 only): Disconnect the module's supplementary notification appliance circuit wiring (TB2-3 & TB2-4) from the 3-ZAxx, and verify that the appropriate Trouble message appears in the Trouble queue. Restore the connection. Short the module's supplementary notification appliance circuit wiring (TB2-3 & TB2-4) from the 3-ZAxx, and verify that the appropriate Trouble message appears in the Trouble queue. Remove the short.

Control/display modules

1. Verify that the display(s) are properly seated in the module and secured with the four snap rivets. Verify that the ribbon cable between the display and its host module is firmly seated on both ends.

2 Activate the lamp test and verify all lamps operated as follows:

   Select the Command Menus button to obtain the Main Menu screen.

Select Test to obtain the Test Menu screen, then select Lamp Test.

2. Perform a functional switch test.

Amplifier transfer panel (ATP)

1. Disconnect power amplifier output. Verify amplifier/riser trouble annunciated on panel. Restore connection.
2. Initiate an All Call page. Verify that audio is available on all power amplifier outputs.
3. If back up amplifiers provided, create an amplifier failure and verify backup amp operates properly.
4. Disconnect AC power from amplifier rack. Initiate an All Call page. Verify that audio is available on all power amplifier outputs.

Detector, input module, and output module testing

The procedures listed in this section should be performed on the detectors, input modules, output modules, and related accessories connected to each cabinet. These procedures are designed to test the devices and the network applications programming.

Note: The network configuration, Signature Control module information must be downloaded into the network and Audio Source Unit, using the System Definition Utility (SDU) program, before starting testing.

Every circuit connected to the EST3 system should be visited, and manually activated during the installation process to verify that:

1. The installed location meets proper engineering practices.
2. The location annunciated by the system agrees with the physical location of the device.
3. That the activated device initiates the correct system response.

Duct detectors should be tested to verify that both minimum and maximum airflow requirements are met.

Signature Series detectors and bases on a 3-SSDC(1) module circuit

1. Verify that all components are installed using accepted workmanship standards.
2. Individually activate each detector. Verify that the appropriate Alarm and location message is displayed on the LCD module. Verify that the detector initiates the appropriate system responses. If the detector is installed in a relay base, verify that the base's relay function operates correctly. If the detector is installed in an isolator base, verify that the base isolates the required circuit segments.

Caution: Do not use magnets to test Signature series detectors. Doing so may damage the detector electronics. Instead, use an approved testing agent (e.g. canned smoke, canned CO, or heat gun.)

3. CO detectors should be tested using the CO aerosol spray SDI LLC model Solo C6-xxx (where xxx indicates a variable related only to marketplace) or the Testifire Multi-Stimulus Detector Tester.

4. Duct mounted detectors should be tested using an air velocity test kit (6263, 6263-SG) to verify that minimum/maximum airflow requirements are met.
5. Remove the detector from its base. Verify that the appropriate Trouble and location message is displayed on the LCD module.
6. After all detectors have been individually inspected, run a Sensitivity report, using the Reports command.

Addressable analog detectors on a 3-AADC(1) Module circuit

1. Verify that all components are installed using accepted workmanship standards.
2. Individually activate each detector. Verify that the appropriate Alarm and location message is displayed on the LCD module. Verify that the detector initiates the appropriate system responses.
3. Duct mounted detectors should be tested to verify that minimum/maximum airflow requirements are met.
4. Remove the detector from its base. Verify that the appropriate Trouble and location message is displayed on the LCD module.
5. After all detectors have been individually inspected, run a Sensitivity report, using the Reports command.

Traditional 2-wire smoke detectors connected to 3-IDC8/4 modules

1. Verify that all components are installed using accepted workmanship standards.
2. Individually activate each detector. Verify that the appropriate Alarm and location message is displayed on the LCD module. Verify the detector circuit initiates the appropriate system responses.
3. Duct mounted detectors should be tested to verify that minimum/maximum airflow requirements are met.
4. Remove the detector from its base. Verify that the appropriate circuit Trouble and location message is displayed on the LCD module.

Conventional 2-wire smoke detectors connected to SIGA-UM modules

1. Verify that all components are installed using accepted workmanship standards.
2. Verify that jumper JP1 on each SIGA-UM module is set to position 1/2.
3. Individually activate each detector. Verify that the appropriate Alarm and location message is displayed on the LCD module. Verify the SIGA-UM initiates the appropriate system responses.
4. Duct mounted detectors should be tested to verify that minimum/maximum airflow requirements are met.
5. Remove the detector from its base. Verify that the appropriate SIGA-UM Trouble and location message is displayed on the LCD module.

Signature series input modules

1. Verify that all components are installed using accepted workmanship standards.
2. Individually activate each initiation device. Verify that the appropriate circuit type and location message is displayed on the LCD module. Verify that the circuit initiates the appropriate system responses.
3. Open up the circuit. Verify that the appropriate circuit Trouble and location message is displayed on the LCD module.

Signature series output modules

1. Verify that all components are installed using accepted workmanship standards.
2. Using the Activate Output command, individually activate each output. Verify that the device responds appropriately.
3. For supervised output circuits, open up the circuit. Verify that the appropriate circuit Trouble and location message is displayed on the LCD module.
4. If the output is activated by one or more system inputs, activate these inputs and verify the output function operates appropriately.

Initiating device testing

The procedures listed in the following sections should be performed on the initiating devices connected to the system, in conjunction with the procedures in the topic “Detector, input module, and output module initial and reacceptance testing.” These procedures are designed to test the initiating devices and the network applications programming.

Manual stations

1. Visual inspection.
2. Activate mechanism.
3. Verify that the appropriate circuit type and device location message is displayed on the LCD module. Verify the device initiates the appropriate system responses.
4. Open up the circuit. Verify that the appropriate circuit Trouble and location message is displayed on the LCD module.

Nonrestorable heat detectors

1. Visual inspection.
2. Test mechanically and/or electrically.
3. Verify that the appropriate circuit type and device location message is displayed on the LCD module. Verify the device initiates the appropriate system responses.
4. Open up the circuit. Verify that the appropriate circuit Trouble and location message is displayed on the LCD module.

Restorable heat detectors

1. Visual inspection.
2. Activate detector.
3. Verify that the appropriate circuit type and device location message is displayed on the LCD module. Verify the device initiates the appropriate system responses.
4. Open up the circuit. Verify that the appropriate circuit Trouble and location message is displayed on the LCD module.

Waterflow switches

1. Visual inspection.

2. Activate sprinkler test valve. (Refer to Sprinkler system test procedure.)
3. Verify that the appropriate circuit type and device location message is displayed on the LCD module. Verify the device initiates the appropriate system responses.
4. Open up the circuit. Verify that the appropriate circuit Trouble and location message is displayed on the LCD module.

Notification appliance testing

The procedures listed in the following sections should be performed on the notification appliances connected to the system, in conjunction with the procedures in “Detector, input module, and output module initial and reacceptance testing.” These procedures are designed to test the notification appliances and the network applications programming.

Visual devices

1. Visual inspection.
2. Activate the circuit. Verify all indicating appliances operating properly.
3. Open up the circuit. Verify that the appropriate circuit Trouble and location message is displayed on the LCD module.

Speakers

1. Visual inspection.
2. Activate the circuit. Verify all indicating appliances operating properly.
3. Open up the circuit. Verify that the appropriate circuit Trouble and location message is displayed on the LCD module.

Bells and horns

1. Visual inspection.
2. Activate the circuit. Verify all indicating appliances operating properly.
3. Open up the circuit. Verify that the appropriate circuit Trouble and location message is displayed on the LCD module.

Record of completion

When the system has been tested and found to operate satisfactorily, make a copy and fill out the Record of Completion on the following pages, and mount it near the fire alarm panel or give it to the building representative.

Record of Completion

Protected Property

Name: _____

Address: _____

_____

Representative: _____

Phone: _____

Authority Having Jurisdiction: _____

Address: _____

_____

Phone: _____

Record of System Installation

This system has been installed in accordance with the NFPA standards listed below, was inspected by _____ on _____, and includes the devices listed below, and has been in service since _____ .

- NFPA 72: Year _____; Ch. 1 2 3 4 5 6 7 (circle all that apply)
- NFPA 70, *National Electrical Code*, Article 760
- Manufacturer's Instructions
- Other (specify): _____

Record of System Operation

All operational features and functions of this system were tested by _____on _____ and found to be operating properly and in accordance with the requirements of:

- NFPA 72: Year _____; Ch. 1 2 3 4 5 6 7 circle all that apply)
- NFPA 70, *National Electrical Code*, Article 760
- Manufacturer's Instructions
- Other (specify): _____

Signed: _____ Dated: _____ Organization: _____

System Software

System Firmware

Installed Revision: _____ Checksum: _____ Date: _____

Application Programming

Initial Program Installation: _____ Date: _____

Revisions & Reasons: _____ Date: _____

_____ Date: _____

_____ Date: _____

Programmed by (name): _____

Date of Programmer's Latest Factory Certification: _____

Data Entry Program Revision Used _____

Maintenance

Frequency of routine tests and inspections, if other than in accordance with the referenced NFPA standards: _____

_____

_____

System deviations from the referenced standards are: _____

_____

_____

_____

(signed) for Central Station or Alarm Service Company (title) (date)

_____

(signed) for representative of the authority having jurisdiction (title) (date)

[EST3ROC1.CDR]

Record of Completion

Initiating Devices and Circuits

(indicate quantity)

___ Manual Stations

Automatic Devices

___ Smoke Detectors: ___ Ion ___ Photo

___ Duct Detectors: ___ Ion ___ Photo

___ Waterflow Switches:

___ Other (list): _____

Combination Detectors (circle active sensors)

___ Ion/Photo/Heat/CO

___ Ion/Photo/Heat/CO

Supervisory Devices and Circuits

(indicate quantity)

___ Compulsory Guard's Tour comprised of _____ transmitter stations and _____ intermdediate stations.

Sprinkler System

___ Valve supervisory devices

___ Building temperature points

___ Site water temperature points

___ Site water supply level points:

Electric Fire Pump

___ Fire pump power

___ Fire pump running

___ Phase reversal

Engine Driven Fire Pump

___ Selector in auto position

___ Control panel trouble

___ Transfer switches

___ Engine running

Other Supervisory Function(s) (specify)

___ _____

_____

_____

Notification Appliances & Circuits

Notification Appliance Circuits _____

Type and quantity of installed Notification Appliances

___ Bells ___ inch

___ Speakers

___ Horns

___ Other: _____

___ Local Annunciator

___ Visual Signals Type: _____

___ with audible

___ without audible

Signaling Line Circuits

Quantity and Style of connected SLCs, per NFPA 72, Table 3-6.1

___ Quantity ___ Style

System & Service

___ **NFPA 72 - Local**

If alarm transmitted off premise, location(s) received: _____

___ **NFPA 72 - Emergency Voice Alarm Service**

Voice/alarm channels: _____ Single: _____ Multiple: _____

Installed speakers: _____ # speakers per zone: _____

Telephones/jacks installed: ____

___ **NFPA 72 - Auxiliary**

Type of connection:

Local Energy: _____ Shunt: _____ Parallel Telephone: _____

Location/Phone # for receipt of signals: _____

___ **NFPA 72 - Remote Station**

Alarm: _____

Supervisory: _____

___ **NFPA 72 - Proprietary**

If alarms retransmitted off premise, location & phone of receiving organization:

Method of alarm retransmission: _____

___ **NFPA 72 - Central Station**

Prime Contractor: _____

Central Station Location: _____

Method of transmission of alarms to central station:

___ McCulloh ___ One-Way Radio ___ Digital Alarm Communicator

___ Multiplex ___ Two-Way Radio ___ Others: _____

Method of transmission of alarms to public fire service comunications center:

1. _____ 2. _____

Power Supplies

Primary (main)

Nominal Voltage: _____

Current Rating: _____

Overcurrent protection:

Type: _____

Current rating: _____

Location: _____

Secondery (standby)

___ Storage battery

Amp-Hour rating: _____

Calculated for _____ hours of system operation.

___ Dedicated generator

Location of fuel supply: _____

Emergency or standby system used to backup primary supply

___ Emergency system described in NFPA 70, Article 700

___ Legally required standby system described in NFPA 70, Article 701

___ Optional standby system described in NFPA 70, Article 702, meeting the performance requirements of Article 700 or 701

[EST3ROC2.CDR]

Chapter 7

Preventive maintenance

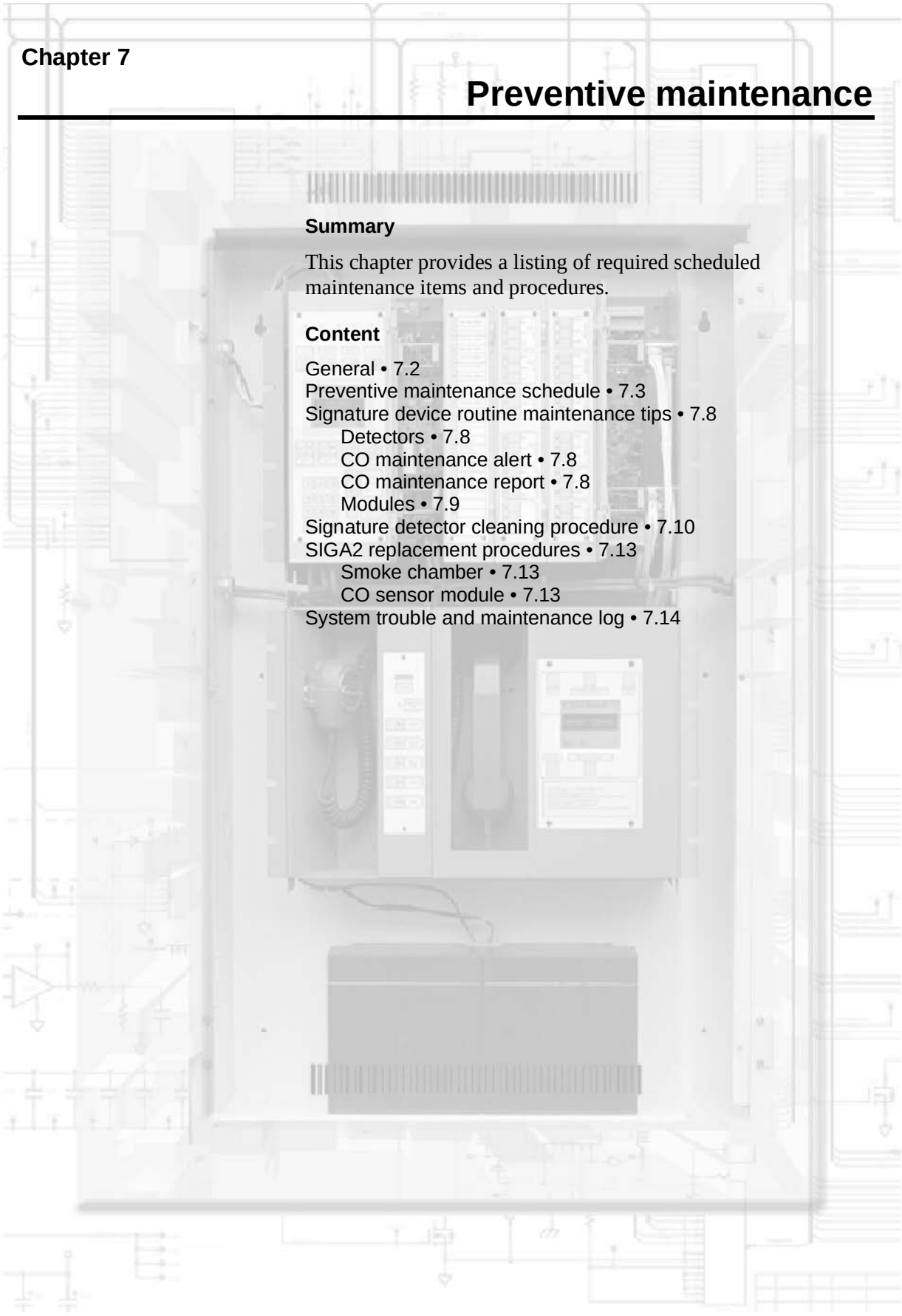

Summary

This chapter provides a listing of required scheduled maintenance items and procedures.

Content

General • 7.2
Preventive maintenance schedule • 7.3
Signature device routine maintenance tips • 7.8
- Detectors • 7.8
- CO maintenance alert • 7.8
- CO maintenance report • 7.8
- Modules • 7.9

Signature detector cleaning procedure • 7.10
SIGA2 replacement procedures • 7.13
- Smoke chamber • 7.13
- CO sensor module • 7.13

System trouble and maintenance log • 7.14

General

Before commencing testing, notify all areas where the alarm sounds and off premises locations that receive alarm and trouble transmissions that testing is in progress.

Records of all testing and maintenance shall be kept on the protected premises for a period of at least five (5) years.

Required Tools:

- Slotted Screwdriver, Insulated
- Digital multimeter
- 1.1 kΩ 1 W resistor
- 12 inch (30.5 cm) jumper lead with alligator clips
- Panel Door Key

In addition, make sure you have the required system passwords. If the system includes access control applications, you'll need a construction card, or other valid access card.

A complete check of installed field wiring and devices should be made at regular intervals, in accordance with NFPA 72 and ULC 524 requirements. This includes testing all alarm and supervisory alarm initiating devices and circuits, and any off premises connections.

Panel operation should be verified in the alarm, supervisory, and trouble modes.

To ensure that the panel can be powered when primary power is lost, the batteries should be periodically inspected, tested, and replaced (as a minimum) every 4 years.

Preventive maintenance schedule

To ensure proper operation, plan maintenance (regular or selected) in accordance with the requirements of the authority having jurisdiction. Refer to NFPA 72 *National Fire Alarm and Signaling Code*, CAN/ULC-S536, *Standard for the Inspection and Testing of Fire Alarm Systems*, and CAN/ULC-S537 *Standard for the Verification of Fire Alarm Systems*.

Use the table below to determine when to perform testing and preventative maintenance procedures.

Preventive maintenance schedule

Component	Testing Interval	Test Procedure
Manual stations	Semiannually	1. Make a visual inspection. 2. Put the zone in test mode. 3. Activate the mechanism. 4. Verify the proper IDC zone response.
Non-restorable heat detectors	Semiannually	1. Make a visual inspection. 2. Put the zone in test mode. 3. Test the detector mechanically and/or electrically. 4. Verify the proper IDC zone response.
Restorable heat detectors	Semiannually	1. Make a visual inspection. 2. Put the zone in test mode. 3. Activate at least one detector on each IDC. All detectors on each IDC must be tested within five years.
SIGA2 heat detectors	Semiannually	1. Visually inspect the detector. Verify that the green LED is flashing. 2. Put the detector/zone in test mode. 3. Activate the heat sensor using a hair dryer and maintaining a distance of three inches or using the Testifire Multi-Stimulus Detector Tester [2] per manufacturer's instructions. **Caution:** Do not apply excessive heat when using a hair dryer. Excessive heat may damage the outer cover. 4. Verify that a detector activation indication is on the FACU per the system design.

Preventive maintenance schedule

Component	Testing Interval	Test Procedure
Smoke detectors	Annually	1. Make a visual inspection. 2. Put the zone in test mode. 3. Conduct a functional test to verify the proper IDC zone response. 4. Check the detector sensitivity. 5. Clean the detector as required.
SIGA2 smoke detectors	Annually	1. Visually inspect the detector. Verify that the green LED is flashing. 2. Put the detector/zone in test mode. 3. Activate the smoke sensor using No Climb Products model CHEK02-xxx [1] smoke aerosol spray, smoke generator, or the Testifire Multi-Stimulus Detector Tester [2] per manufacturer's instructions. 4. Verify that a detector activation indication is listed on the printer. 5. Run a detector sensitivity and compensation report.
SIGA2 smoke and heat detectors	Annually	1. Visually inspect the detector. Verify that the green LED is flashing. 2. Put the detector/zone in test mode. 3. Activate the smoke sensor using No Climb Products model CHEK02-xxx smoke aerosol spray, smoke generator, or the Testifire Multi-Stimulus Detector Tester per manufacturer's instructions. 4. Activate the heat sensor using a hair dryer and maintaining a distance of three inches or using the Testifire Multi-Stimulus Detector Tester per manufacturer's instructions. **Caution:** Do not apply excessive heat when using a hair dryer. Excessive heat may damage the outer cover. 5. Verify that a detector activation indication is listed on the printer. 6. Run a detector sensitivity and compensation report.
CO sensors	Monthly [3]	1. Visually inspect the detector. Verify that the green LED is flashing. 2. Perform a CO sensor function test.
CO sensors	6 years after date of manufacture	1. Replace the CO sensor.

Preventive maintenance schedule

Component	Testing Interval	Test Procedure
SIGA2 smoke, heat, and CO detectors	Annually	1. Visually inspect the detector. Verify that the green LED is flashing. 2. Put the detector/zone in TEST mode. 3. Activate the smoke sensor using No Climb Products model CHEK02-xxx [1] smoke aerosol spray, smoke generator, or the Testifire Multi-Stimulus Detector Tester [2] per manufacturer's instructions. 4. Activate the heat sensor using a hair dryer and maintaining a distance of three inches or using the Testifire Multi-Stimulus Detector Tester per manufacturer's instructions. **Caution:** Do not apply excessive heat when using a hair dryer. Excessive heat may damage the outer cover. 5. Place the CO sensor in the accelerated response mode. a. At the panel, select Command Menus. b. Select Option 4) Activate. c. Select Option 9) Gas Accel Response. d. Enter the device number for the sensor to be tested. Format: PPCCDDDD where PP = panel number, CC = card number, and DDDD = device address. Refer to the SDU Help version 11.0 or later for information on programming for the accelerated response mode. 6. Activate the CO sensor using SDI LLC model Solo C6-xxx [1] CO aerosol spray without covering the head or with the Testifire Multi-Stimulus Detector Tester [2] per manufacturer's instructions. **Note:** If the CO sensor is programmed as the alarm point, it must comply with the requirements of NFPA 720. 7. Verify that a detector activation indication is listed on the printer. 8. Run a detector sensitivity and compensation report.
Waterflow switches	Every two months	1. Put the zone in test mode. 2. Activate the sprinkler test valve. Refer to the sprinkler system test procedure.

Preventive maintenance schedule

Component	Testing Interval	Test Procedure
All initiating device circuits	Annually	1. Put the IDC zone in test mode. 2. Activate the IDC zone. Appropriate NACs should activate and zone information should be annunciated. 3. Restore the test device and reset the zone. 4. Open the IDC field wiring. A trouble message should be annunciated. 5. Reset and lock the panel at the conclusion of all testing.
Remote annunciators	Annually	1. Verify that all indicators are operating properly.
Notification appliances	Annually	1. Make a visual inspection. 2. Put the panel in alarm, drill, or test mode. Verify that all indicating appliances are operating properly.
Panel LEDs and trouble buzzer	Annually	1. Illuminate all LEDs by pressing the Panel Silence and Trouble Silence switches at the same time. 2. Reset and lock the panel at the conclusion of all testing.
Panel primary power	Acceptance and reacceptance tests	1. Remove the primary AC power. 2. Verify that the panel operates from the battery. 3. Verify that the panel goes into trouble (after a 6 second delay). 4. Restore the AC power at the end of the test. 5. Reset and lock the panel at the conclusion of all testing.
Panel secondary power	Acceptance and reacceptance tests	1. Remove the primary AC power. 2. Measure the standby and alarm currents, and compare these with the battery calculations to verify adequate battery capacity. 3. Test the system under full load for 5 minutes. 4. Measure the battery voltage under full load. (The acceptable range is 20.4 to 27.3 VDC.) 5. Restore the AC power at the end of test. 6. Reset and lock the panel at the conclusion of all testing.
Panel trouble signals	Annually	1. Verify operation of system Trouble LED and trouble buzzer. 2. Reset and lock the panel at the conclusion of all testing.
LCD clock	Each visit	1. Verify that the displayed time is correct. Reset the clock if the time is incorrect.

Preventive maintenance schedule

Component	Testing Interval	Test Procedure
Supervisory signal initiating devices	Semiannually	1. Put the zone in test mode. 2. Operate the test valve. 3. Test the pressure, temperature, and water level sensors per the sprinkler system test procedure.
Auxiliary system off-premises fire alarm signal transmission	Monthly	1. Coordinate the test with the receiving location. 2. Verify the receipt of all transmitted signals. 3. Reset and lock the panel at the conclusion of all testing.
Remote system off-premises waterflow signal transmission	Every two months	1. Coordinate the test with the receiving location. 2. Verify the receipt of all transmitted signals. 3. Reset and lock the panel at the conclusion of all testing.

[1] xxx indicates a variable related only to marketplace.

[2] For more Testifire information, visit www.testifire.com

[3] Monthly until January, 2012, when it becomes an annual test.

Signature device routine maintenance tips

Detectors

When removing one detector at a time, wait 1 minute after replacing the first detector before removing the next detector. This gives the system time to recognize and re-map the first detector before generating a trouble condition caused by removing the second detector.

CO maintenance alert

In addition to displaying a maintenance alert when the photo element dirtiness is at or above 80%, the loop controller displays a maintenance alert when the CO sensor module is at or below 6 months until end of life. If both elements are at or above these thresholds, there is only one maintenance alert. Once the dirtiness threshold is at 100%, a dirty detector trouble displays for the photo element. Once there are 0 months until end of life, the panel displays the CO end-of-life trouble message.

CO maintenance report

The CO sensor module has a life span of 6 years. After 6 years, the detector sends out an end-of-life trouble message. When this trouble message is transmitted, replace the CO sensor module.

To determine the months until end of life, request a Maintenance Report.

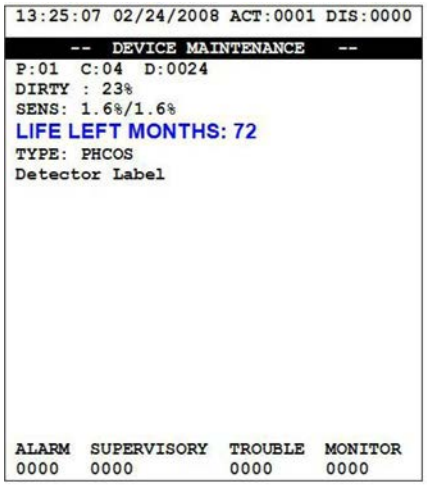

Figure 7-1: Maintenance report

Modules

Signature modules should be visually inspected to insure the physical installation is secure. Functional testing of the module should be done regularly as required by the AHJ.

Signature detector cleaning procedure

There are two cleaning procedures.

- SIGA detectors require using a conventional vacuum cleaner equipped with the detector cleaning tool from the Signature Series Tool Kit (P/N SIGA-ST). The tool is installed on the end of the suction hose (nominal 1.5 in. or 3.8 cm ID). This creates a high velocity vortex scrubbing action around the detector, removing loose dust and debris which is subsequently drawn into the vacuum.
- SIGA2 detectors require opening the detector and cleaning the interior using a vacuum cleaner and a soft brush as instructed below.

Note: In order to avoid false alarms, disable the detector being cleaned before cleaning.

To clean SIGA detectors:

1. Disable the detector to prevent false alarms.
2. Use the conventional vacuum cleaner brush attachment to remove any visible cobwebs etc. from the immediate area of the detector.
3. Connect the detector cleaning tool to the suction hose.
4. Place the detector cleaning tool over the detector head for approximately 10 seconds.
5. After the detector has been cleaned, restore it to proper operation.
6. Run the detector sensitivity routine to print a list of detector sensitivity and compensation readings and to verify the effectiveness of the cleaning.

Note: Without using the detector cleaning tool to clean the detectors, it is not possible to verify the dirtiness levels after cleaning. In this case, clean the detector per instructions above and operate for a minimum of two hours, then restart the loop controller. If the detectors are cleaned properly, the maintenance indicators return to normal condition.

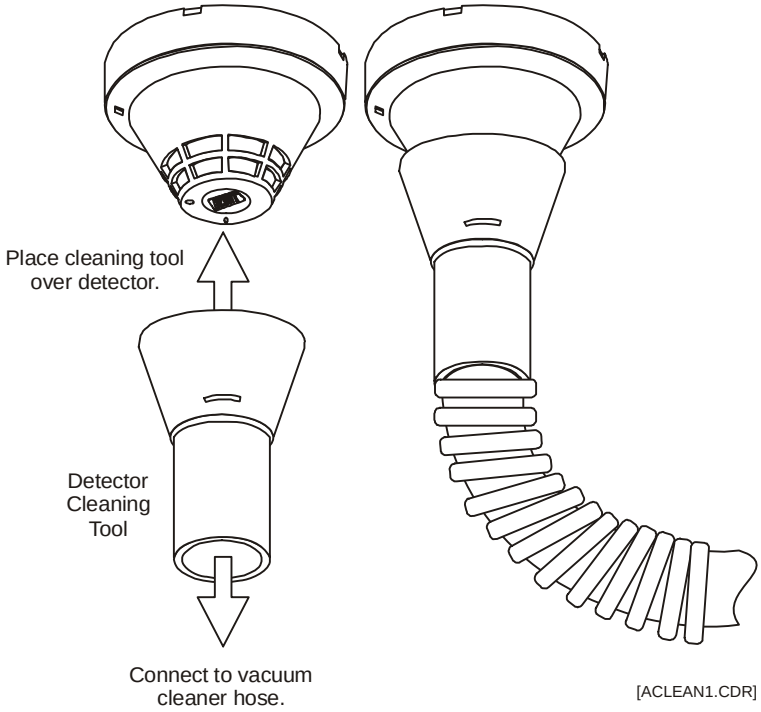

Figure 7-2: Detector Cleaning Tool

To clean SIGA2 detectors:

1. Disable the detector or zone to prevent false alarms.
2. Use a conventional vacuum cleaner brush to remove visible cobwebs, etc. from the immediate area of the detector.
3. Remove the detector from the detector base, by inserting a small screwdriver into the tamper-resist access slot while rotating the detector counterclockwise.
4. Push the locking tab on the bottom of the detector toward the center then twist and pull to remove the cover.
5. Using a soft brush and vacuum, carefully remove any dust or dirt from around the sensor chambers. See Figure 3.
6. After the detector has been cleaned, reassemble and restore it to proper operation.
7. Check and record the detector's dirty level reading to verify the effectiveness of cleaning.
8. If cleaning is unsuccessful, return the detector to the factory and replace it with a new detector.

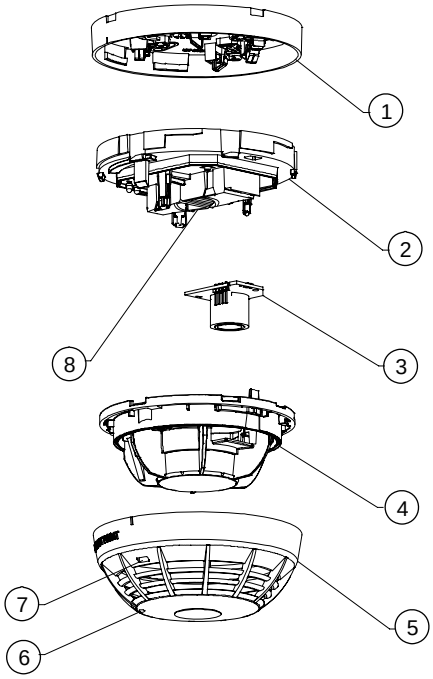

1. Mounting base
2. Detector base
3. CO sensor module (on CO detectors only)
4. Smoke chamber: to remove.
5. Detector cover: twist and pull to remove
6. LED indicator
7. Access slot for tamper-resist mechanism
8. Optics box

Figure 3: SIGA2 smoke detector with CO sensor

To properly judge the effectiveness of the detector cleaning process, observe the effect cleaning had on the detector's dirtiness level. If the detectors are cleaned properly, the maintenance indicators return to normal condition.

SIGA2 replacement procedures

Smoke chamber

The SIGA2 smoke detectors have replaceable smoke chambers. Replace the smoke chamber of these detectors when, after cleaning the detector, the control panel still indicates a dirty detector.

There are two replacement smoke chambers. Replace the smoke chamber as described on its installation sheet.

Table 1: Replaceable smoke chambers.

Model	Replaces smoke chamber on
2-SPRC1	SIGA2 -PS, SIGA2-PHS
2-SPRC2	SIGA2-PCOS, SIGA2-PHCOS

CO sensor module

2-CORPL is the replacement sensor for the Signature Series CO detectors. Replace the CO sensor module every six years or when the control panel indicates a sensor end-of-life condition. Refer to installation sheet P/N 3101589.

Note: For proper operation, never replace the CO sensor itself without the PCB as each board has calibration data specific to the CO sensor.

System trouble and maintenance log

Date	Time	Event	Initial

Chapter 8

Service and troubleshooting

Summary

This chapter provides a comprehensive set of procedures and tables to aid certified technical personnel in servicing and troubleshooting the system.

Content

Overview • 8.3
- Maintenance philosophy • 8.3
- Problem classification • 8.3
- Handling static-sensitive circuit modules • 8.3
- Removing or replacing circuit modules • 8.4
- Recommended spares list • 8.4

Hardware problems • 8.5
- Identification • 8.5
- Isolation • 8.5
- Substituting hardware • 8.5
- Adding hardware • 8.6
- Downloading problems • 8.6

Modules • 8.7
- Rail signals • 8.7
- 3-PPS/M Primary Power Supply module • 8.7
- 3-BPS/M Booster Power Supply module • 8.9
- CPU Central Processor module • 8.9
- 3-FIBMB fiber optic interface • 8.13
- Signature Controller modules • 8.14
- Control / display modules • 8.14
- Audio amplifier modules • 8.15
- 3-OPS Off-Premises Signal module • 8.16
- 3-IDC8/4 Initiating Device Circuit module • 8.16
- 3-LDSM Display Support module • 8.17
- 3-MODCOM(P) Modem Communicator module • 8.17
- Common causes of problems • 8.18

Audio components • 8.20
- 3-ASU Audio Source Unit • 8.20
- 3-FTCU Firefighter Telephone Control Unit • 8.21
- SIGA audio amplifiers • 8.21

Pseudo point descriptions • 8.24

Signature data circuit (SDC) operation • 8.35

Basic Signature data circuit troubleshooting • 8.37
- Isolating circuit and device problems • 8.37
- Open circuit conditions • 8.37
- Short circuit conditions • 8.38
- Ground fault conditions • 8.39
- Substituting known good Signature series devices • 8.41

Signature controller modules • 8.47

Substituting Signature controller modules • 8.47
Mapping errors • 8.47
Device troubleshooting • 8.49
Signature diagnostic tools • 8.51
Using Signature diagnostics • 8.51
Signature diagnostic sequence • 8.52
Displaying mapping errors • 8.52
Displaying device chain errors • 8.55
Using the chain lists • 8.57
Displaying message counters • 8.57
Displaying device trouble • 8.59
Displaying trouble tables • 8.62
DSDC status • 8.65
Introduction • 8.65
Setting up the System Definition Utility program • 8.65
Using DSDC status • 8.65
Displaying the current SDC status • 8.65
Displaying a log of current SDC status events • 8.67
Displaying the SDC in-process progress chart • 8.68
Addressable analog diagnostic tools • 8.70
System definition utility • 8.70
Problem solving hints • 8.72
3-AADC1 Addressable Analog Driver Controller • 8.74
Substituting 3-AADC1 local rail modules • 8.74
Addressable analog device troubleshooting • 8.75
Wiring problems • 8.77
Correcting addressable analog circuit wiring problems • 8.78

Overview

Maintenance philosophy

The EST3 life safety system consists of modular assemblies utilizing surface mount technology (SMT) for easy installation and maintenance. SMT provides high reliability but prohibits component-level field repairs. For these and other reasons, the maintenance philosophy consists of fault isolating to the circuit card assembly, removing the defective circuit card, and then replacing it with a spare.

Service and repair of EST3 system components centers around the following assumptions:

1. Qualified technicians possessing a complete understanding of the system hardware and functions will perform maintenance.
2. Only certified maintenance technicians will service the equipment.
3. Maintenance technicians will have a ready available supply of replacement parts.

Problem classification

Problems with the system can generally be classified into two categories: application programming problems and hardware (including firmware) problems. Many times hardware problems are identified by the system itself. Application programming problems are typically suspected when an incorrect response happens, or when a response fails to happen or happens at the wrong time.

Handling static-sensitive circuit modules

Many of the circuit modules use components that are sensitive to static electricity. To reduce the possibility of damaging these components, take the following precautions when handling:

1. Use only approved grounding straps that are equipped with a 1 MΩ resistive path to earth ground.
2. Always keep circuit modules in their protective antistatic packaging. Remove only for inspection or installation.
3. Always hold circuit modules by the sides. Avoid touching component leads and connector pins.

Removing or replacing circuit modules

When removing or replacing circuit modules, always remember to:

1. First disconnect the battery then remove AC power. Removing or replacing circuit modules when power is applied will damage the equipment.
2. Avoid applying excessive force to the snap-rivet fasteners that lock the plug-in modules in place. If needed, use the extraction tool provided in the hardware kit.

Recommended spares list

As a general guideline, 10% of the quantity installed or a minimum of 1 each of the following installed equipment should be available as spare:

- Power supply
- Local rail modules
- Amplifiers (if no backup installed in system)
- Printer ribbon

As a general guideline, 10% of the quantity installed or a minimum of 3 each of the following installed equipment should be available as spare:

- Monitor modules
- Control modules
- Heat detectors
- Ionization smoke detectors
- Photoelectric smoke detectors
- CO detectors, including combination, heat, smoke, and CO
- Base, detector
- Duct detector filter kits
- Breakglass replacement for pull stations
- Breakglass replacement for warden stations
- Horn, bell, strobe, and speaker

System batteries and CO replacement modules should be replaced at recommended intervals. Stocking of spare batteries and CO modules is not recommended because of shelf-life limitations.

The SIGA2 smoke detectors have replaceable smoke chambers. These should be replaced when, after cleaning the detector, the control panel still indicates a dirty detector. As a general guideline, 10% of the quantity installed or a minimum of 3 each dependent on environmental conditions.

Hardware problems

Identification

Hardware problems are typically identified by an intermittent or total failure of a device.

Isolation

Hardware problems may be categorized as problems within an equipment cabinet, and problems with field wiring and devices.

The quickest way to locate a hardware problem is by selectively isolating portions of the system and observing the results of the isolation. By selectively isolating smaller and smaller portions of the system, hardware faults can usually be isolated. The suspect component may then be replaced with a known good component, and the results again observed.

Substituting hardware

Caution: Never install or remove a module while power is applied to the cabinet.

The local rail modules in the EST3 system are microprocessor based. The Signature driver controller module, Central Processor Module (CPU) module, 3-AADC1 Addressable Analog Device Controller module, and 3-ASU Audio Source Unit all have “flash” memory, which is used to store the operating firmware. The flash memory is empty when the module is shipped from the factory. When the configuration database is downloaded into the cabinet, each component using flash memory receives specific information. This information includes the module’s location in the system and its configuration.

Note: Because the content of each module is specific to its cabinet location, do not substitute 3-SSDC(1), CPU, 3-AADC1, or 3-ASU modules without downloading the new cabinet configuration database.

If you are substituting a Signature driver controller module, you must also download the specific Signature circuit information into the module’s memory. If you are substituting a 3-AADC1 driver controller module, you must also download its specific circuit configuration into its database. If you are substituting 3-ASU modules, you must also download the audio message database directly into the 3-ASU.

Rail module substitution and replacement rules

Rule 1: Modules must be replaced with modules of the same model number.

Rule 2: LED / Switch Displays must be replaced with LED / Switch Displays of the same model number.

Rule 3: Substitute modules *must* have an *identical* LED / Switch Display installed as the module it replaces.

Rule 4: Substitute modules should be installed in the same rail location as the module it is replacing.

Adding hardware

When hardware is added to a cabinet, a portion of the network configuration database must also be changed. The extent of the changes depends on the rule relationships between the added component and the balance of the network. Revised copies of the database must then be downloaded using the SDU.

Downloading problems

If you are experiencing frequent downloading problems, low signal level from the download computer may be the cause. The Buffered RS-232 Communication Cable, Catalog No. SDU-CBL, may be used to correct signal level problems.

Note: Do not use the buffered RS-232 communication cable with a CPU.

Modules

Rail signals

The figure below shows the signals normally present on a pair of chassis rails.

Note: The panel controller and the power supply monitor module must be installed in order to measure the voltages indicated.

Top Rail	
Pin	Function
1 - 2	+6.25 VDC
3	+Sense
4	-Sense
5	-Audio Data
6	+Audio Data
7	-Rail Data
8	+Rail Data
9 - 10	Not Used
11 - 14	Common

Bottom Rail	
Pin	Function
1 - 4	+24 VDC
5	All Fail
6 - 9	Not Used
10 - 12	Ground

[3RAILSIG.CDR]

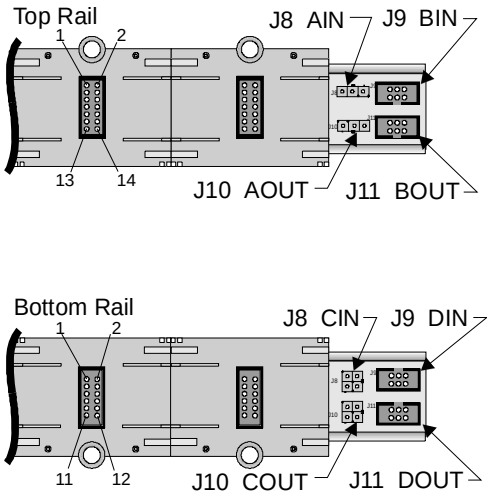

The DC voltages can be checked with a digital meter. Data signals on pins 7 and 8 of the top rail can be verified by looking at the Receive (RX) and Transmit (TX) LEDs on any module installed on the rail.

3-PPS/M Primary Power Supply module

The transmit (TX) and receive (RX) LEDs on the Primary Power Supply Monitor Module should flicker, indicating normal two way communication activity with the CPU.

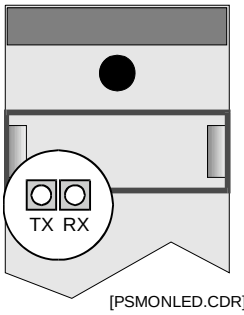

[PSMONLED.CDR]

If the 3-PPS/M Primary Power Supply is used in conjunction with one or more 3-BPS/M Booster Power Supplies, there is

interaction between the supplies. Under most conditions, a defective power supply will be identified by the system, and annunciated as a trouble. The system may continue to operate nearly normally, as the battery connected to the faulty supply will automatically be switched into the circuit, as the load demands.

Table 8-1: Nominal primary and booster power supply voltages

Test Point	Voltage
Rail Power	25 - 26.4 Vdc w/AC power on
Auxiliary Power	25 - 26.4 Vdc w/AC power on
Battery	27.3 V (battery under charge @ 25 °C)

Table 8-2: Primary Power Supply module troubleshooting

Problem	Possible cause
Supply will not operate from AC line	1. AC line fuse F2 (3.15A slow blow) open 2. Rectified DC fuse F3 (3.15A slow blow) open
RX or TX LED OFF No communication between 3-PSMON and CPU	1. Defective or poor connection on ribbon cable between 3-PSMON and 3-PPS 2. 3-PSMON Defective 3. 3-PPS Defective
Auxiliary and Rail voltage low	1. Excessive load causing supply to fold back 2. Power Cable between 3-PSMON and 3-PPS loose or defective 3. Booster Supply failure causing primary supply to fold back
Batteries will not charge	1. System in alarm mode 2. Fuse F1 (8A) on 3-PPS open 3. 30 to 60 Ah battery installed, 10 to 29 Ah battery specified in SDU 4. Battery shorted 5. Battery not wired to power supplies correctly (only wired to BPS/M)
System will not operate on batteries	1. Battery voltage below 18 Vdc. (system automatically turns off when batteries too low to properly operate system) 2. Fuse F1 (8A) on 3-PPS open 3. Batteries connected before AC power energized 4. Battery temperature too high 5. Defective batteries

3-BPS/M Booster Power Supply module

The transmit (TX) and receive (RX) LEDs on the Booster Power Supply Monitor Module should flicker, indicating normal two way communication activity with the CPU.

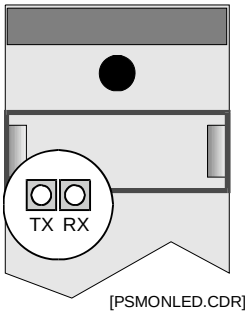

[PSMONLED.CDR]

The booster power supply voltages are indicated in Table 8-1. Table 8-3 lists common problems with the booster power supply and booster monitor module.

Table 8-3: Booster Power Supply module troubleshooting

Problem	Possible cause
Supply will not operate from AC line	1. AC line fuse F2 (3.15A slow blow) open 2. Rectified DC fuse F3 (3.15A slow blow) open
RX or TX LED OFF No communication between 3-BPSMON and CPU	1. Defective or poor connection on ribbon cable between 3-BPSMON and 3-BPS 2. 3-BPSMON defective 3. 3-BPS defective
Auxiliary and Rail voltage low	1. Excessive load causing supply to fold back 2. Power Cable between 3-BPSMON and 3-BPS loose or defective 3. Booster Supply failure causing primary supply to fold back
System will not operate on batteries	1. Battery voltage below 18 Vdc. (system automatically turns off when batteries too low to properly operate system) 2. Fuse F1 (8A) on 3-BPS open 3. Batteries connected before AC power energized 4. Battery temperature too high 5. Defective batteries

CPU Central Processor module

The CPU controls all the communication and processing of information for modules located in its cabinet. Token ring

network communication between CPU modules in other cabinets is also processed by the CPU. Network communication is RS-485 when the 3-RS485 card is installed in CPU connector J2, and fiber optic when the 3-FIBMB or 3-NSHM module is connected to J2 of the CPU.

Network and audio data circuits

Figure 8-1 and Table 8-4 show the location and normal state of the communication status LEDs on the CPU module.

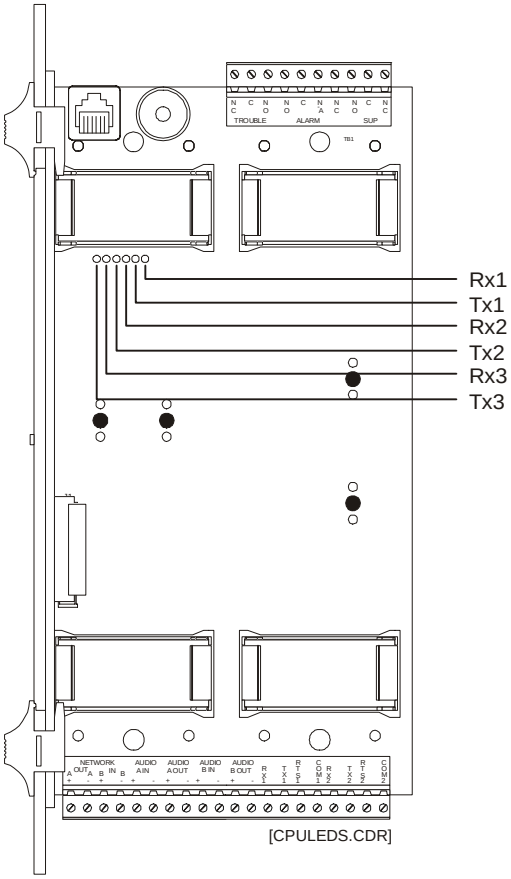

Figure 8-1: CPU module

Table 8-4: CPU LED indications

LED	Normal state	Description
RX1	Flicker	Local Rail Receive Activity
TX1	Flicker	Local Rail Transmit Activity
RX2	Flicker	Network Data Ch A Receive Activity
TX2	Flicker	Network Data Ch A Transmit Activity

RX3	Flicker	Network Data Ch B Receive Activity
TX3	Flicker	Network Data Ch B Transmit Activity

EST3 network wiring alternates between channel A and channel B, as shown in Figure 8-2.

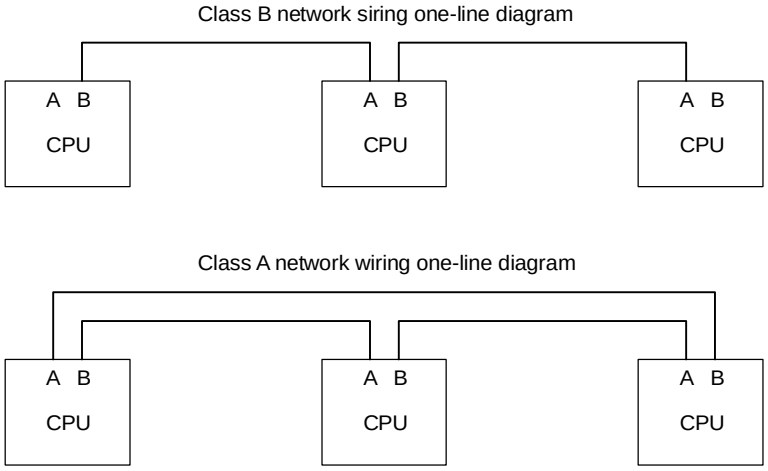

Figure 8-2: Network wiring one-line diagrams

RX1 and TX1 should flicker continuously, indicating normal two-way CPU module to rail module communication activity.

When multiple CPU modules are networked together using Class B wiring, RX2, TX2, RX3, and TX3 on all panels except the first and last should flicker continuously, indicating normal two-way network communication activity on both data channels.

When multiple CPU modules are networked together using Class A wiring, RX2, TX2, RX3, and TX3 should flicker continuously, indicating normal two way network communication activity on data channels A, and B.

The network and audio riser data circuits are isolated at each CPU module. This prevents a shorted data circuit from interrupting communication on the entire circuit. Figure 8-3 shows typical Class B network data circuit.

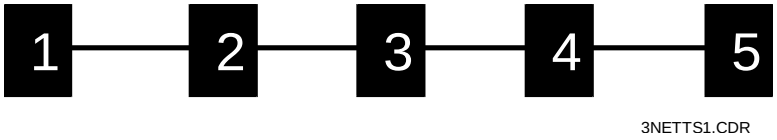

Figure 8-3: Class B network data circuit

When trying to isolate trouble on a network or audio data circuit, remember that both shorted and open circuit segments will interrupt communication between two CPU modules.

Figure 8-4 shows an open or short circuit fault between cabinets 3 and 4.

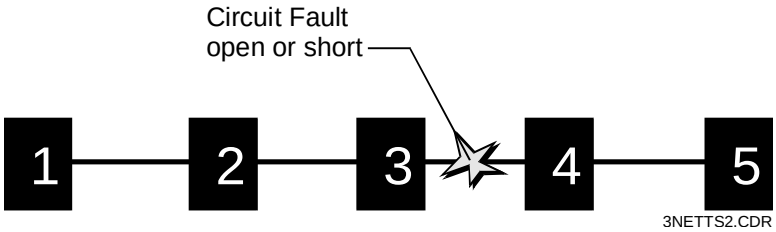

Figure 8-4: Network data circuit fault

Either an open or shorted circuit will interrupt communication between cabinets 3 and 4. The token ring network will reconfigure and operate as two independent sub-networks, one consisting of cabinets 1, 2, and 3; the second consisting of cabinets 4 and 5.

Due to the isolation between cabinets, during a ground fault condition, the number of potential circuits to be investigated is limited to those originating from a single cabinet.

Table 8-5: CPU troubleshooting

Problem	Possible cause
RX1 or TX1 off	1. CPU not firmly seated in rail connectors 2. CPU failure
RX2, TX2 or RX3, TX3 off, or both pairs off	1. (+) and (-) wires reversed. 2. Circuit not properly terminated 3. Network A and Network B circuits crossed 4. Improper wire installed 5 Ground fault 6. 3-RS485 card loose
RS-232 port (J5) inoperative	1. TX and RX wires reversed 2. CPU and peripheral device baud rate mismatched 3. PC improperly configured
Ancillary RS-232 port (TB2-1 to 4 or TB2-5 to 8) inoperative	1. TX and RX wires reversed. 2. CPU and peripheral device baud rate mismatched 3. Peripheral device off-line or improperly configured

Table 8-5: CPU troubleshooting

Problem	Possible cause
RS-485 port (TB2 17 to 20) inoperative	1. (+) and (-) wires reversed. 2. 3-RS485 card not seated properly 3. Network A and Network B circuits crossed 4. Improper wire
Power LED off, no characters on display, switches inoperative	1. No power to panel. 2. Ribbon cable between LCD and CPU loose or defective. 3. CPU defective 4 LCD defective 5. CPU not configured in SDU for LCD
All Module LEDs and switches inoperative AND host module working correctly.	1. Ribbon cable between display and CPU module loose or defective 2. Display not configured in SDU 3. Display defective
Switch activation does not perform the required function.	1 Display not defined in SDU database 2. Domain not configured correctly.

3-FIBMB fiber optic interface

Several models of the 3-FIB card are available to support compatible operations with different models of the CPU.

3-FIB: Compatible with the 3-CPU.

3-FIBA: Compatible with the 3-CPU and 3-CPU1. The 3-FIBA provides Class A audio when used with the 3-CPU1, but not when used with the 3-CPU.

3-FIBMB: Compatible with both the 3-CPU1 and the 3-CPU3, but not with the 3-CPU.

Note: If network communication must be maintained when the node is powered down for service, connect a 12 V battery to J2 on the fiber optic interface card.

The LEDs on the 3-FIBMB interface board adjacent to the fiber optic indicate circuit activity.

Test jumpers

Jumper JP1 is used to put the module in test mode. In the test mode, the “OUT” ports transmit a constant signal, which can be used to measure cable loss.

Table 8-6: 3-FIB troubleshooting

Symptom	Possible causes
No LED activity on any fiber optic port	1. Ribbon cable between interface and electronics card loose, Improperly installed, or broken. 2. Electronics card not properly seated in J2 of CPU.
No LED activity on “IN” fiber optic port	1. Incorrect cable connected to port.
Steady on LED on “IN” fiber optic port	1. Jumper JP1 left in test position.

Signature Controller modules

Please refer to Signature Component Troubleshooting Chapter for complete information on Signature related troubleshooting.

Control / display modules

The information in this section applies to the following models of control / display modules:

3-12/1RY	3-2RY	3-12/2RY
3-12SG	3-12SR	3-12SY
3-12/SIGY	3-12/S1RY	3-12/AS2Y
3-24G	3-24R	3-24Y
3-6/3S3L	3-6/3S1G2Y	3-6/S1GYR

The control / display modules operate independently of the host module on which they are installed. The displays do use the host module’s electronics to communicate with the CPU.

The Lamp Test function (pressing Panel Silence and Alarm Silence Switches simultaneously) will quickly isolate hardware problems from programming problems with any display.

Table 8-7: Control / display module troubleshooting

Problem	Possible cause
Module LEDs and switches inoperative AND host module inoperative	1. No power to panel 2. Ribbon cable between display and host module loose or defective 3. Display defective 4. Host module defective

Table 8-7: Control / display module troubleshooting

Problem	Possible cause
All module LEDs and switches inoperative AND host module working correctly	1. Ribbon cable between display and host module loose or defective 2. Display not configured in SDU 3. Display defective
LEDs respond incorrectly	1. Display not defined in SDU database 2. LED misidentified in SDU database 3. Rule governing LED operation not correctly written
Switch activation does not perform the required function	1. Display not defined in SDU database 2. Switch misidentified in SDU database 3. Rule governing switch operation not correctly written

Audio amplifier modules

Table 8-8: 3-ZAxx Zoned Audio Amplifier module troubleshooting

Problem	Possible cause
Audio output level too low	1. Jumpers set for 25 Vrms when connected to a 70 Vrms circuit 2. Gain adjusted too low 3. Input level to ASU too low
No or extremely low audio output	1. Fuse blown 2. Gain set too low
Audio level too high	1. Jumper set for 70 Vrms when connected to 25 Vrms circuit 2. Gain adjusted too high 3. Input level to ASU too high
Amplifier current limiting	1. Audio circuit overloaded 2. Input level to ASU too high
Incorrect amplifier version reported to CPU module	1. Jumpers installed incorrectly

3-OPS Off-Premises Signal module

Table 8-9: 3-OPS Off-Premises Signal module troubleshooting

Problem	Possible cause
Module in trouble	1. Master box circuit open or not reset 2. Reverse polarity circuit open 3. 3.6 kΩ EOL resistor not installed on unused circuits
Remote receiver indicates circuit trouble and does not receive alarm	1. Circuit polarity reversed 2. Circuit open 3. Excessive circuit resistance 4. Incompatible receiver 5. Defective module
Remote receiver does NOT indicate circuit trouble and does not receive alarm	1. 3-OPS Not activated by panel (SDU database) 2. Incompatible receiver 3. Defective module

3-IDC8/4 Initiating Device Circuit module

Table 8-10: 3-IDC8/4 Initiating Device Circuit module troubleshooting

Problem	Possible cause
Module in trouble	1. 4.7 kΩ EOL resistor not installed on unused IDC circuits 2. 15 kΩ EOL resistor not installed on unused NAC circuits 3. No communication with CPU module 4. Module not defined in SDU database. 5. Field wiring connector not plugged into module
NAC output not working	1. Jumpers installed incorrectly 2. External source configured but not connected 3. Circuit folding back due to overload. 4. Circuit “Silenced” 5. Circuit shorted 6. Polarized device defective or reversed on circuit
IDC circuit not working	1. Incompatible 2-wire smoke detectors 2. Excessive wiring resistance or capacitance

3-LDSM Display Support module

Table 8-11: 3-LDSM Display Support module troubleshooting

Problem	Possible cause
All Module LEDs and switches inoperative *and* host module working correctly	1. Ribbon cable between display and 3-LDSM module loose or defective 2. Module not configured in SDU 3. Display not configured in SDU 4. Display defective

3-MODCOM(P) Modem Communicator module

Diagnostic aids

Two LEDs (DS1 and DS2) provide diagnostic information. The activity of DS1 and DS2 during dialing and data transmission are outlined in the following table.

Table 8-12: 3-MODCOM LED states and meanings

LED state	DS1 meaning	DS2 meaning
Off	No activity	No activity
On	Line 1 has been seized	Line 2 has been seized
Slow flash	Dialer or modem data is being passed on Line 1	Dialer data is being passed on line 2. (Modem data is passed only on line 1.)
Slow flash (both)	Slow flash on both LEDs indicates an ongoing download of application code or configuration code from CPU or SDU	
Fast flash	Reflects ringing on Line 1. (Flashing follows pattern detected.)	N/A - line 2 does not have ring detection

A Radio Shack Mini Audio Amplifier (catalog number 277-1008) facilitates listening to the distinctive sounds associated with dialing, receiving handshakes, transmitting data, and receiving acknowledgements. Obtain this device locally and place a 0.1 µF 200 V or greater capacitor in series with one of the leads. (You can install the capacitor permanently, within the case, if you prefer.) Alternately, you can use a lineman's butt set in monitor mode.

During downloading from a remote computer, you will hear the distinct sound of modems establishing a connection, then a series

of rapid chirps as data is transmitted from the ACDB or KDC program.

Note: Remove the amplifier when you finish troubleshooting. Do not install the amplifier permanently.

Common causes of problems

Evaluation of visual and audible indications will usually serve to isolate the source of trouble. Before attempting to replace the 3-MODCOM module, the following causes of problems should be investigated:

- The 3-MODCOM module is not properly seated on the rail connectors, or one or more connector pins have been bent away from the associated sockets
- A modular telephone plug is not connected to the appropriate line 1 or line 2 jack, or is not fully seated, or is not connected at the telephone block
- The 3-MODCOM has been configured with incorrect CMS telephone numbers
- The telephone line is faulty

If the module and telephone line are okay, check the CMS telephone number by dialing it using a standard telephone plugged directly into the RJ-31X jack. (The jack will accommodate a standard modular phone plug.)

You should hear a dial tone when going off-hook, lose the dial tone after dialing the first digit, hear the receiver ringing, hear the CMS receiver go off-hook and send a handshake tone.

Typical problems dialing the CMS involve missing or incorrect area codes, the need to dial 1 for long distance, and missing line access codes (example: dialing 9 for an outside line).

If the receiver answers, check that it is sending out the correct handshake. For SIA P2 (3/1 pulse), SIA P3 (4/2 pulse), and SIA DCS the receiver should send a single tone of 0.5 to 1.0 seconds in duration. For Contact ID, the handshake signal consists of two short tones of different frequency. For TAP there should be a modem-type exchange of handshake messages.

If the receiver sends the correct handshake and the 3-MODCOM transmits data but the receiver does not send an acknowledgement, check that the receiver is compatible with the desired protocol. (SIA DCS, P2, and P3 standards are available from the Security Industry Association). Typical problems involve an incompatible format or data message.

If the handshake and acknowledge signals are audible, check that the correct account number was configured in the 3-MODCOM

and that the code being sent was correctly programmed in the CMS computer.

Where a 3-MODCOM module is suspected of being faulty, try substituting a known good one that has been properly programmed.

Audio components

3-ASU Audio Source Unit

Table 8-13: 3-ASU Audio Source Unit Troubleshooting

Problem	Possible cause
Unit does not respond. No network RX or TX LED activity	1. Power or data connectors loose or connected wrong on Rail Chassis Interface Card 2. Ribbon cable between Rail Chassis Interface Card and 3-ASU (and 3-FTCU, if installed) loose or defective 3. Ribbon cable between 3-ASU main board and cover loose or defective
No *All Call* page audio output from network amplifiers and low level page output terminals	1. Defective microphone 2. Page inhibit timer set too long 3. Defective 3-ASU 4. Ribbon cable between 3-ASU main board and cover loose or defective 5. Defective amplifier
No *All Call* page audio output from network amplifiers, output available at low level page output terminals	1. Network audio data riser open, shorted, or incorrectly wired 2. Network data riser open, shorted, or incorrectly wired 3. TB2 on the CPU loose or incorrectly wired 4. 3-ASU not properly configured in SDU database 5. Amplifiers not properly installed or defective
Page audio distorted	1. Speaking too loud into microphone. Speak such that the last green LED on the page level meter only flickers occasionally 2. Gain of individual amplifiers set too high
Auxiliary Input volume level too low	1. Adjust Aux input gain control on ASU 2. Auxiliary input wiring open or shorted
Auxiliary Input volume level too high	1. Adjust Aux input gain control on ASU
Recorded messages not working properly	1. 3-ASUMX memory not firmly seated in connector 2. Audio database not correctly downloaded into 3-ASU 3. Incorrect message label referenced.
Wrong messages going to wrong floors	1. Amplifier and message labels and rules incorrect or mislabeled
Telephone Page inoperative	1. Wiring between 3-ASU and 3-FTCU open, shorted, or incorrectly wired

Table 8-13: 3-ASU Audio Source Unit Troubleshooting

Problem	Possible cause
Remote Microphone trouble	1. Wrong or missing EOL resistor on microphone key input 2. No supervisory tone on DC current on remote microphone audio output

3-FTCU Firefighter Telephone Control Unit

Table 8-14: 3-FTCU (3-ASU/FT) Firefighter Telephone Control Unit Troubleshooting

Problem	Possible cause
Unit does not respond No RX or TX LED activity	1. Power or data connectors loose or connected wrong on Rail Chassis Interface Card 2. Ribbon cable between Rail Chassis Interface Card and 3-FTCU loose or defective 3. Ribbon cable between 3-FTCU main board and cover loose or defective 4. Defective 3-FTCU
Signature modules do not switch telephones correctly	1. Network data riser open, shorted, or wired incorrectly 2. TB2 on the CPU loose or wired incorrectly 3. Defective 3-FTCU 4. Signature module has incorrect label, personality code, or device type 5. Defective Signature module
Low telephone volume level	1. More than five handsets active at one time 2. Phone riser open, shorted, or wired incorrectly 3. Connector TB1 on 3-FTCU loose 4. Defective telephone
Call displayed by LCD doesn't match connected call	1. Signature module incorrectly labeled in rule 2. Signature module misidentified or installed in wrong location

SIGA audio amplifiers

The following material refers to these amplifier models:

- SIGA-AA30 Audio Amplifier
- SIGA-AA50 Audio Amplifier

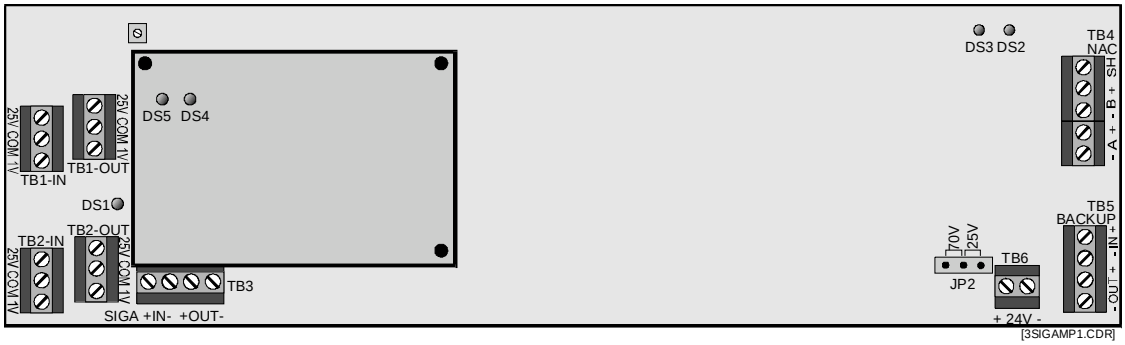

Table 8-15: SIGA-AAxx LED indications

LED	Color	Description
DS1	Yellow	Power Amp Enabled
DS2	Yellow	Backup Mode
DS3	Green	Amplifier Active
DS4 (daughter board)	Green (flashing)	Normal
DS5 (daughter board)	Red (flashing)	Active Condition

Gain adjustment

With the amplifier connected to the speaker load, use the gain adjust potentiometer (R116) to get a 25 Vrms or 70 Vrms signal (depending on JP2 setting) with a 1Vrms 1 kHz tone at the amplifier input. If a oscilloscope is used to adjust levels, use the following peak-to-peak voltage levels:

- 25 Vrms = $71V_{PP}$
- 70 Vrms = 200 V_{PP}

The amplifier must be connected to a load to properly adjust the gain. In the event the actual speaker circuit cannot be used, a dummy load must be fabricated according to Table 8-16. The wattage rating of the dummy load must exceed the output power rating of the amplifier.

Table 8-16: Amplifier dummy load values

Output power	25 Vrms output	70 Vrms output
30 Watts	20.8 Ω @ 30W	167Ω @ 30W
50 Watts	12.5 Ω @ 50W	100Ω @ 50W

To maintain DC supervision and keep the amplifier out of trouble while adjusting the gain, connect a 47 kΩ EOL resistor

across the NAC B output (TB4-2 and TB4-3), then connect the dummy load to the NAC A Output terminals (TB4-4 and TB4-5).

Caution: Do not operate the amplifier with both the speaker circuit and the dummy load connected.

Table 8-17: SIGA-AAxx Audio Amplifier troubleshooting

Problem	Possible cause
No output	1. 24 Vdc power or input signal missing 2. Output circuits wired incorrectly 3. Daughter board not firmly seated in connector 4. Module defined incorrectly in database 5. In backup mode with backup amplifier or wiring problem 6. Branch circuit control modules inoperative or programmed incorrectly
Backup 1 kHz Tone sounding	1. Input wiring incorrect or missing 2. Low or no audio input
Low Output	1. 70 Vrms speakers with 25 Vrms jumper setting 2. Too many SIGA-CC1s or SIGA-CC2s installed causing amplifier to shut down 3. Gain (R116) setting too low

Pseudo point descriptions

Table 8-18: System pseudo points

Address	Label	Source	Functional description
0001	Startup Response	CPU	Changes to the active state when the panel is energized or an operator initiates a Restart from the LCD module.
0002	First Alarm Response	CPU	Changes to the active state when the first point on a panel or any panel in the same network routing group changes to the alarm state.
0003	First Supervisory Response	CPU	Changes to the active state when the first point on a panel or any panel in the same network routing group changes to the supervisory state.
0004	First Trouble Response	CPU	Changes to the active state when the first point on a panel or any panel in the same network routing group changes to the trouble state.
0005	First Monitor Response	CPU	Changes to the active state when the first point on a panel or any panel in the same network routing group changes to the monitor state.
0006	Evacuation Response	CPU	Changes to the active state when an operator presses a switch that executes the Evacuation command.
0007	Drill Response	CPU	Pseudo point that changes to the active state when an operator presses a switch that executes the Drill command.
0008	AllCall Response	CPU	Changes to the active state when an operator presses the All Call or All Call Minus switch on the 3-ASU.
0009	Alarm Silence Response	CPU	Changes to the active state when an operator presses a switch that executes the AlarmSilence command.
0010	Two Stage Timer Expiration	CPU	Changes to the active state when a panel’s two-stage alarm timer expires.
0011	Reset Active	CPU	Changes to the active state when an operator presses a switch that executes the Reset command.
0012	Reset Phase 1	CPU	Changes to the active state when the first phase of the 3-phase reset cycle starts.
0013	Reset Phase 2	CPU	Changes to the active state when the second phase of the 3-phase reset cycle starts.

Table 8-18: System pseudo points

Address	Label	Source	Functional description
0014	Reset Phase 3	CPU	Changes to the active state when the third phase of the 3-phase reset cycle starts.
0015	First Disable Response	CPU	Changes to the active state when the first point on a panel or any panel in the same network routing group changes to the disable state.
0016	Fail Safe Event	CPU	Changes to the active state when a device asserts the rail alarm-not line and the CPU module has not registered an alarm event.
0017	Service Group Active	CPU	Changes to the active state when an operator enables a Service Group from the LCD module.
0018	Two Stage Timer Active	CPU	Changes to the active state when a panel's two-stage alarm timer starts.
0019	Loop Controller Reset Extension	CPU	Changes to the active state when a loop controller stays in the reset mode longer than expected.
0020	Service Device Supervision	CPU	Changes to the active state when an operator cancels a Service Group test while a circuit under test remained active.
0021	User Trouble	CPU	Changes to the active state when an operator forces a trouble into the system. Not implemented at this time.
0022	Ext Database Incompatibility	CPU	Changes to the active state when a different database in one or more network nodes
0023	Reboot Fault	CPU	Changes to the active state when the CPU module is interrupted unexpectedly.
0101–0164	Comm Fail xx	CPU	Changes to the active state when the CPU is unable communicate with the networked CPU module in cabinet xx.
0200–0222	Task xx Watchdog Violation	CPU	Changes to the active state when task xx fails to execute properly.
0261–0279	Configuration Mismatch Card xx.	CPU	Changes to the active state when the card in slot xx cannot perform the programmed advance feature (currently only degraded mode).
0281–0299	DB Out Of Sync with CPU Card xx	CPU	Changes to the active state when the Signature controller module in rail slot xx reports an actual and expected data mismatch.

Table 8-19: Local alarm pseudo points

Address	Label	Source	Description
0676	Unprogrammed Device	3-AADC1	Device not defined in SDU database is in alarm or trouble state
0676	Unprogrammed Device Data Card 1	3-DSDC 3-SSDC1 3-SDDC1	Device not defined in SDU database is in alarm or trouble state
0686	Unprogrammed Device Data Card 2	3-DSDC 3-SSDC1 3-SDDC1	Device not defined in SDU database is in alarm or trouble state

Table 8-20: Local trouble pseudo points

Address	Label	Source	Description
0001	Class A Fault Spur	3-SAC	Fault or break in Class A loop on SAC bus
0002	Class A Fault Video Bus	3-SAC	Fault or break in Class A loop on video bus
0003	Annunciator Supervision	3-SAC	Control / display module faulty or missing or not properly configured
0004	Rail Module Communication Fault	3-SAC	Cabinet local rail communication failure
0005	Video Communication Fault	3-SAC	Fault or break in video signal lines
0006	RAM Fault or Stack Fault	3-SAC	Fault in internal 3-SAC processor
0007	Code Supervision	3-SAC	Executable program corrupt
0008	Internal Fault	3-SAC	3-SAC hardware failure
0009	Configuration Fault	3-SAC	1. Module in wrong slot 2. Incorrect display on module
0010	Database Supervision	3-SAC	Database corrupt
0071	Task Failure	3-SAC	
0071	Waiting for SDU Download	3-SAC	Database download from the SDU is in progress or was incomplete
0600	Annunciator Supervision	General	Control / display module faulty or missing or not properly configured
0601	Class A Failure	CPU	Fault or break in Class A network data riser connection
0601	Rail Module Communication Fault	General	Cabinet local rail communication failure
0602	Ground Fault Detection	CPU	Any cabinet component or field wiring
0603	Audio Supervision	CPU	Audio data circuit open or shorted

Table 8-20: Local trouble pseudo points

Address	Label	Source	Description
0604	Internal Fault	General	CPU hardware failure
0604	RAM Fault or Stack Fault	3-AADC1	RAM or Stack (memory) fails its interval check
0605	Database Supervision	General	Database corrupt
0605	DB Supervision Audio Default Tone	3-ASU	No message present, problem erasing flash, message space fails internal checks
0606	Code Supervision	General	Executable program corrupt
0607	Auxiliary Port One	CPU	Port 1 serial communication circuit open or shorted
0607	Data Card Fault	3-AADC1	N/A
0607	Data Card Fault 1	3-DSDC 3-SSDC1 3-SDDC1	N/A
0608	Auxiliary Port Two	CPU	Port 2 serial communication circuit open or shorted
0608	Data Card Fault 2	3-DSDC 3-SSDC1 3-SDDC1	N/A
0609	Panel in Download Mode	CPU	Panel out of service. In mode to accept download data
0609	Configuration Fault	General	1. Module in wrong slot 2. Incorrect display on module
0610	Network Audio Circuit A Fault	CPU	Loss of signal on primary audio connection
0610	Rail Voltage Out of Spec	3-PPS/M 3-BPS/M 3-BBC/M	1. Rail voltage >30 Vdc or <24 Vdc 2. Excessive rail current load 3. Faulty or misadjusted 3-PPS/3-BPS
0610	Telephone Line 1	3-MODCOM	Line-cut fault detected on phone line 1
0611	Network Audio Circuit B Fault	CPU	Loss of signal on secondary audio connection
0611	Rail Vltg Blw Batt	3-PS/M	Excessive rail current load
0611	Telephone Line 2	3-MODCOM	Line-cut fault detected on phone line 2
0612	Heat Sink Too Hot	3-PPS/M 3-BPS/M 3-BBC/M	1. Enclosure vents clogged 2. Heat sink not fastened properly

Table 8-20: Local trouble pseudo points

Address	Label	Source	Description
0612	Receiver Test - Line 1	3-MODCOM	Line 1 test transmission to CMS failed
0613	Lo Batt Cut Off	3-PPS/M 3-BPS/M 3-BBC/M	Battery voltage below 19.5 Vdc when on battery backup
0613	Receiver Test - Line 2	3-MODCOM	Line 2 test transmission to CMS failed
0614	AC Brownout	3-PPS/M 3-BPS/M 3-BBC/M	AC line voltage below 96 Vac for 3-PPS or 196 Vac for 3-PPS/230
0614	RS-232 Channel	3-MODCOM	Communication failure with RS-232 card on module
0615	Batt Trbl	3-PPS/M 3-BPS/M 3-BBC/M	1. Battery wiring open 2. Battery voltage below 24 Vdc 3. Battery internal resistance too high (load test failure)
0616	Network_ClassA_CircuitA_Failure_01_01	CPU	CPU unable to receive data on data riser circuit A
0617	Network_ClassA_CircuitB_Failure_01_01	CPU	CPU unable to receive data on data riser circuit B
0616	Aux Pwr Ovld Ckt 2	3-PPS/M 3-BPS/M 3-BBC/M	1. Excessive load 2. Circuit shorted
0617	DSP Supervision	3-MODCOM	The DSP chip on the module failed.
0617	Pwr Supply Fail	3-PPS/M 3-BPS/M 3-BBC/M	1. Cables between power supply and monitor module loose or missing 2. Defective power supply or monitor module
0618	Aux Pwr Ovld Ckt 1	3-PPS/M 3-BPS/M 3-BBC/M	1. Excessive load 2. Circuit shorted
0619	Drvr Pwr Supply Fail	3-PPS/M 3-BPS/M 3-BBC/M	1. Cables between power supply and monitor module loose or missing 2. Defective power supply or monitor module
0620	Demux Audio Input	3-ZAxx	Digitized audio data missing
0620	Waiting for SDU Download	3-MODCOM	Database download from the SDU is in progress or was incomplete

Table 8-20: Local trouble pseudo points

Address	Label	Source	Description
0621	Amp Overcurrent	3-ZAxx	1. Circuit shorted 2. Speaker wattage tap setting exceeds output rating of amplifier 3. 70 Vrms jumper setting used with 25 Vrms speakers. .
0622	Primary Audio Output DC	3-ZAxx	1. Open DC NAC circuit, missing or wrong value EOL resistor 2. Shorted DC NAC circuit
0623	Primary Audio Output Analog	3-ZAxx	1. Open Audio NAC circuit, missing or wrong value EOL resistor 2. Shorted Audio NAC circuit 3. Output voltage jumper set wrong
0624	Backup Audio Output Analog	3-ZAxx	1. Open Audio NAC circuit, missing or wrong value EOL resistor 2. Shorted Audio NAC circuit 3. Output voltage jumper set wrong
0625	Amplifier Daughter Board	3-ZAxx	Defective board
0626	Fuse Supervision	3-ZAxx	Open fuse in amplifier
0627	PAL Supervision	3-ZAxx	Bad PAL chip. Replace amplifier.
0629	Request Backup	3-ZAxx	N/A
0630	Riser Supervision	3-FTCU	1. Open circuit, missing or wrong value EOL resistor 2. Shorted circuit
0631	User Interface	3-FTCU	Ribbon cable between display and main PC board loose or missing.
0632	Master Phone Supervision	3-FTCU	Master handset internal wiring fault
0633	Handset Off Hook	3-FTCU	Hook switch defective
0640	Jumper Fault	3-OPS	Jumpers incorrectly set
0641	AtoD Converter Failure	3-OPS	Internal module failure
0642	City Tie Open	3-OPS	N/A
0652	Input Supervision Trbls	3-ASU	Defective microphone or connections
0653	Phone Page Time Out	3-ASU	Phone page switch has been activated for a period which exceeds the time limit set via SDU program
0654	Audio Hardware Mismatch	3-ASU	Mismatch between 3-ASUMX specified via SDU program and that installed in the 3-ASU

Table 8-20: Local trouble pseudo points

Address	Label	Source	Description
0655	RAM Diagnostic Failure	3-ASU	Memory failure in 3-ASU
0656	Audio Default Failure	3-ASU	1. 3-ASUMX memory card missing 2. Audio database does not exist
0658	Audio Interface Failure	3-ASU	3-ASU hardware fault
0659	Audio Class Supervision	3-ASU	One riser open or shorted
0670	In Bootloader	3-AADC1	PC connected to card attempting download
0670	In Bootloader	3-DSDC 3-SSDC1 3-SDDC1	PC connected to card attempting download
0671	Line Opened or Shorted	3-AADC1	Wiring Fault
0671	Line Opened or Shorted Data Card 1	3-DSDC 3-SSDC1 3-SDDC1	Wiring Fault
0672	Map Fault Data Card 1	3-DSDC 3-SSDC1 3-SDDC1	1. Mismatch between actual data and expected data 2. Defective wiring 3. Defective device
0677	Grnd Fault	3-AADC1	Wiring Fault
0677	Grnd Fault Data Card 1	3-DSDC 3-SSDC1 3-SDDC1	Wiring Fault
0678	Reconstct Line	3-AADC1	N/A
0679	Smoke Power Current Limit	3-AADC1	N/A
0679	Smoke Power Current Limit Card 1	3-DSDC 3-SSDC1 3-SDDC1	N/A
0680	Internal Failure	3-LDSM	N/A
0681	Line Opened or Shorted Data Card 2	3-DSDC 3-SSDC1 3-SDDC1	Wiring Fault
0682	Map Fault Data Card 2	3-DSDC 3-SSDC1 3-SDDC1	1. Mismatch between actual data and expected data 2. Defective wiring 3. Defective device
0687	Grnd Fault Data Card 2	3-DSDC 3-SSDC1 3-SDDC1	Wiring Fault

Table 8-20: Local trouble pseudo points

Address	Label	Source	Description
0689	Smoke Power Current Limit Card 2	3-DSDC 3-SSDC1 3-SDDC1	Defective module
0690	Configuration Mismatch Slot 1	3-DSDC 3-SSDC1 3-SDDC1	N/A

Table 8-21: Local monitor pseudo points

Address	Label	Source	Description
0615	Incoming Ring	3-MODCOM	An incoming call was received by the module.
0622	Outgoing Call in Progress		Dialer is active
0650	All Call Active	3-ASU	Changes to the active state when an operator presses the All Call switch
0651	Mic Key Active	3-ASU	Changes to the active state when an operator presses the push-to-talk switch on the paging microphone.
0673	Mapping In Progress Data Card 1	3-DSDC 3-SSDC1 3-SDDC1	N/A
0674	Mapping Disbld Data Card 1	3-DSDC 3-SSDC1 3-SDDC1	Mapping manually disabled
0675	Device Maint Alert	3-AADC1	N/A
0675	Device Maint Alert Data Card 1	3-DSDC 3-SSDC1 3-SDDC1	Dirty detector on loop 1
0678	Reconstct Line Data Card 1	3-DSDC 3-SSDC1 3-SDDC1	N/A
0683	Mapping In Progress Data Card 2	3-DSDC 3-SSDC1 3-SDDC1	N/A
0684	Mapping Disbld Data Card 2	3-DSDC 3-SSDC1 3-SDDC1	Mapping manually disabled
0685	Device Maint Alert Data Card 2	3-DSDC 3-SSDC1 3-SDDC1	Dirty detector on loop 2

Table 8-21: Local monitor pseudo points

Address	Label	Source	Description
0688	Reconstct Line Data Card 2	3-DSDC 3-SSDC1 3-SDDC1	N/A

Table 8-22: Nonsupervised output pseudo points

Address	Label	Source	Description
0621	Manual Answer Control	3-MODCOM	Answers incoming call

Table 8-23: CRC pseudo points

Address	Label	Event type	Description
SS01	AC Brownout	Access trouble	Sustained low voltage from CRC supply to device
SS02	Low Battery	Access trouble	CRC battery below specified voltage
SS03	Tamper	Security alarm	CRC tamper switch was activated
SS04	Strike Fault	Access trouble	Strike device failed
SS05	Reader Fault	Access trouble	Card reader failed
SS06	RAM Fault or Stack Fault	Access trouble	CRC processor failed
SS07	Code Supervision	Access trouble	CRC executable program corrupt
SS08	Database Supervision	Access trouble	CRC database corrupt
SS09	Communications Fault	Access trouble	CRC lost communication with 3-SAC
SS10	Loop 1	Security alarm (configurable)	Input device on loop 1 activated
SS11	Loop 2	Security alarm (configurable)	Input device on loop 2 activated
SS12	Task Failure	Local trouble	Changes to the active state when a task fails to execute properly
SS15	Waiting for SDU Download	Local trouble	Database download from the SDU is in progress or was incomplete
SS32	CRC Strike Timed	Access output	Activate the strike device for a specified interval
SS33	CRC Strike Unlock	Access output	Activate the strike device
SS34	CRC Relay Timed	Access output	Activate the CRC relay for a specified interval

Table 8-23: CRC pseudo points

Address	Label	Event type	Description
SS35	CRC Relay Open	Access output	Activate the CRC relay
SS36	CRC Inside Reader Disable	Access output	Disable the inside card reader device (for load shedding)
SS37	CRC Outside Reader Disable	Access output	Disable the outside card reader device (for load shedding)
SS38	CRC Sounder	Access trouble	CRC sounder base trouble
SS represents the CRC device number, as configured in the SDU.			

Table 8-24: KPDISP pseudo points

Address	Label	Event type	Description
SS06	RAM Fault or Stack Fault	Local trouble	KPDISP processor failed
SS07	Code Supervision	Local trouble	KPDISP executable program corrupt
SS08	Database Supervision	Local trouble	KPDISP database corrupt
SS09	Communications Fault	Local trouble	KPDISP lost communication with 3-SAC
SS12	Task Supervision	Local trouble	Changes to the active state when a task fails to execute properly
SS13	Waiting for Download	Local trouble	Database download from the SDU is in progress or was incomplete
SS14	User Record Supervision	Local trouble	N/A
SS15	Controller Communication Fault	Local trouble	KPDISP lost communication with 3-SAC (displayed on KPDISP only)
SS16	Panel Communication Fault	Local trouble	KPDISP lost communication with panel (displayed on KPDISP only)
SS32	Entry Buzzer	Nonsupervised output	Activates for configured time to allow the partition to be disarmed before going into alarm
SS33	Exit Buzzer	Nonsupervised output	Activates for configured time to allow the person arming a partition to exit before signaling any alarm events
SS represents the KPDISP device number, as configured in the SDU.			

Table 8-25: Local relay pseudo points

Address	Label	Source	Description
0002	Amplifier Backup	3-ZAxx	Changes to the active state when the amplifier's input relay selects the back up amplifier input as its signal source.
0003	Channel_1_Relay_ Confirmation	3-ZAxx	Changes to the active state when the amplifier's input relay selects channel 1.
0004	Channel_2_Relay_ Confirmation	3-ZAxx	Changes to the active state when the amplifier's input relay selects channel 2.
0005	Channel_3_Relay_ Confirmation	3-ZAxx	Changes to the active state when the amplifier's input relay selects channel 3.
0006	Channel_4_Relay_ Confirmation	3-ZAxx	Changes to the active state when the amplifier's input relay selects channel 4.
0007	Channel_5_Relay_ Confirmation	3-ZAxx	Changes to the active state when the amplifier's input relay selects channel 5.
0008	Channel_6_Relay_ Confirmation	3-ZAxx	Changes to the active state when the amplifier's input relay selects channel 6.
0009	Channel_7_Relay_ Confirmation	3-ZAxx	Changes to the active state when the amplifier's input relay selects channel 7.
0010	Channel_8_Relay_ Confirmation	3-ZAxx	Changes to the active state when the amplifier's input relay selects channel 8.
0011	Page Select	3-ZAxx	Changes to the active state when the amplifier's input relay selects the Page channel.

Signature data circuit (SDC) operation

The advanced features of the Signature controller module perform a number of advanced operations. These operations are not always apparent from the panel controller. Table 8-26 lists a number of SDC conditions and describes the circuit's operation.

Table 8-26: SDC operation

Condition	Operation
Remove a detector, then re-install the same detector in the same base.	1. The system displays a trouble with the detector's label or address when the detector is removed. 2. The system restores completely when the detector is re-installed in its original base.
Remove a module or pull station, then re-install the same device in the same location.	1. The system displays a trouble with the module's label or address when the device is disconnected. 2. The panel restores completely when the device is re-installed in its original location.
Remove a detector, then re-install a different detector of the same type in the same base.	1. The system displays a trouble with the detector's label or address when the detector is removed 2. When the new detector is installed, the Signature controller module re-maps the circuit, replacing the S/N of the old detector with the S/N of the new detector. All the old detector's sensitivity and verification settings are transferred to the new detector. The system will return to normal when mapping is finished.
Remove a module or pull station, then re-install a different device of the same type in the same location. (SIGA-UM replacement modules must have jumper JP1 set in the same position as the original module.)	1. The system displays a trouble with the device's label or address when the device is disconnected. 2. When the new device is installed, the Signature controller module re-maps the circuit, replacing the S/N of the old device with the S/N of the new device. If the devices are modules (not pull stations), the old module's personality codes are transferred to the new module. The panel will return to normal when mapping is finished.
Remove a detector, then re-install a different type detector in the same base.	1. The system displays a trouble with the detector's label or address when the detector is removed. 2. When the new detector is installed, the Signature controller module re-maps the circuit, replacing the S/N of the old detector with the S/N of the new detector. All the old detector's sensitivity and verification settings (when applicable) are transferred to the new detector. The new detector will be operational, however the panel will be in trouble, indicating a device type mismatch. The System Definition Utility program must be used to re-assign the device type to get the system out of trouble.

Table 8-26: SDC operation

Condition	Operation
Remove a module or pull station, then re-install a different type module or pull station in the same location.	1. The system displays a trouble at the device's label or address when the device is removed. 2. When the new device is installed, the Signature controller module re-maps the circuit, replacing the S/N of the old device with the S/N of the new device. The new module is NOT operational. The panel will be in trouble, indicating a device type mismatch. System Definition Utility program must be used to re-assign the device type to get the panel out of trouble. 3. If a single address module is replaced with a dual address module or vice versa, a map fault will be generated by the address count mismatch.

Basic Signature data circuit troubleshooting

Isolating circuit and device problems

The process of isolating a problem on a Signature data circuit is similar to that used on a conventional fire alarm Initiating Device Circuit (IDC). An accurate and complete wiring diagram of the data circuit installation is the best troubleshooting aid available. When used in conjunction with the information provided by the control panel, you should be able to easily isolate open conditions or defective devices. The data circuit shown in Figure 8-5 will be used to illustrate basic troubleshooting techniques.

When troubleshooting Class A circuits, disconnect the circuit from the return (SIGA/A) terminals, and temporarily jumper both SIGA/A terminals to the respective SIGA/B terminals. Then troubleshoot the circuit as a Class B circuit.

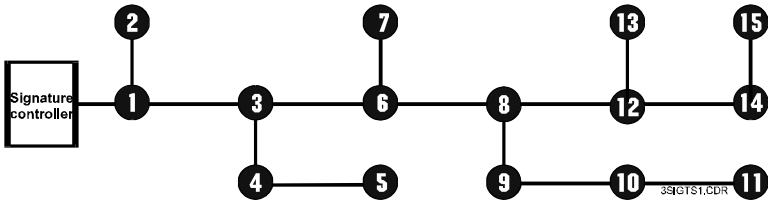

Figure 8-5: Normal circuit topology

Open circuit conditions

On a circuit with an open fault, the Signature modules will be communicating with devices up to the break. The LCD module will indicate a trouble condition on all devices beyond the break. This is illustrated in Figure 8-6 where devices 1 through 7 continue to operate while devices 8 through 15 report device troubles.

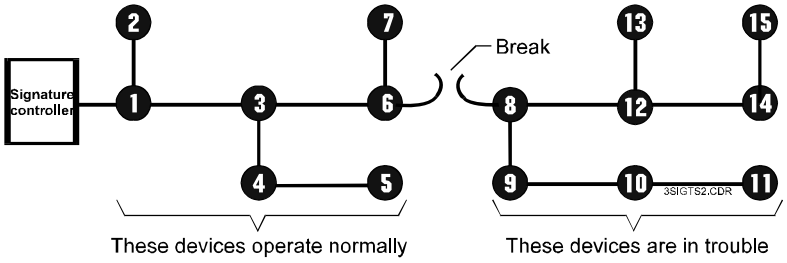

Figure 8-6: Break in circuit between devices 6 and 8

Referring again to Figure 8-6, a wire break or intermittent connection between devices 6 and 8 is the most probable cause

of the failure. Other possible but unlikely causes with the same symptoms include device failure of only devices 9 -15; and devices 9-15 not loaded in the Signature module's database or not properly configured using the Signature portion of the data entry program.

Short circuit conditions

Short circuit conditions require selective isolation of portions of the data circuit to systematically narrow down the fault's location. A shorted circuit will typically show a trouble condition on all devices, as illustrated in Figure 8-7.

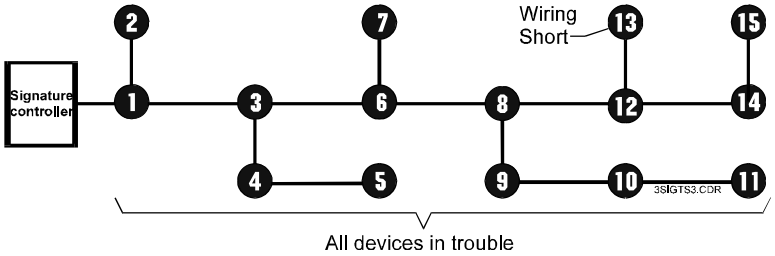

Figure 8-7: Wiring Short On device 13

To isolate the short, open the circuit at a location that will disconnect approximately 50% of the installed devices, as shown in Figure 8-8.

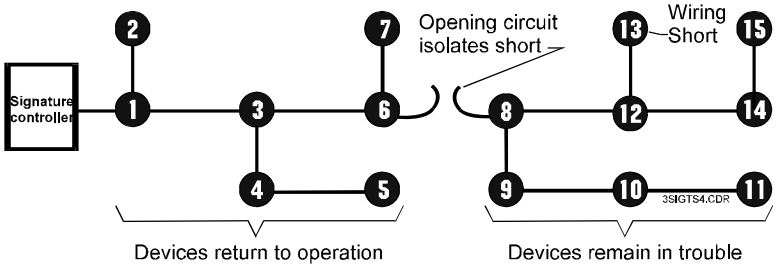

Figure 8-8: Isolating circuit short

If some of the devices restore in Figure 8-8, the short is located on the portion of the circuit that has been disconnected. If no devices restore when the circuit is opened, the short has been isolated to the first 50% of the circuit.

Re-connect the previously isolated portion of the circuit, and open the circuit at a new location. If during the first open circuit test some devices restored, open the circuit at a location "electrically farther" from the Signature controller module and repeat the test. If during the first open circuit test no devices restored, open the circuit at a location "electrically closer" to the module, and repeat the test. Continue to increase or decrease the

number of devices on the opened circuit leg until you eventually isolate the single device or wire segment that is causing the problem.

Distinguishing short circuits from off-hook conditions in telephone risers

If local regulations require the ability to distinguish between a short circuit and an off-hook condition in a telephone riser, you must configure the circuit so that it functions as a 4-state telephone. The table below lists compatible riser selector modules and compatible telephone sets:

Table 8-27: Devices than can be used to configure a 4-state telephone

Riser selectors	Telephone modules
SIGA-CC1 SIGA-CC1S	Portable handset and receptacle (P/N 6833–1 and 6830–3)
SIGA-MCC1 SIGA-MCC1S	Remote telephone and wall box, Break Glass Type (P/N 6831–1 and 6830–1) Remote telephone and wall box, Nonbreak Glass (P/N 6831–4 and 6830–1)

For instructions on configuring a four-state telephone, refer to the installation sheet supplied with the SIGA input or output module.

Ground fault conditions

Ground fault conditions require selective isolation of portions of the data circuit to systematically narrow down the fault's location. A circuit with a ground fault (approximately 10 kΩ or less to ground) will cause the LCD module to light the Ground Fault LED. Ground fault conditions can occur on the data circuit, the 24 Vdc smoke power circuit or the input circuits to Signature series modules. The general location of a ground fault can be determined using the LCD status command and Table 8-28 below.

Table 8-28: Ground fault indications

LCD	Ground Fault Location
Ground Fault LED ON No Device Trouble	1. Signature data circuit 2. 24 Vdc smoke power circuit
Ground Fault LED ON Device PPCCDDDD Trouble	1. Positive leg of input circuit of device PPCCDDDD

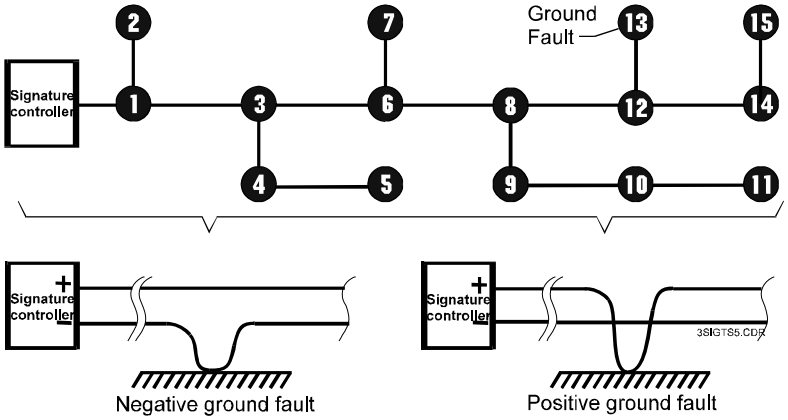

Figure 8-9: Signature data circuit ground faults

To isolate the ground fault, open the suspect circuit (both conductors) at a location that will disconnect approximately 50% of the installed devices. Figure 8-10 illustrates the technique on a data circuit. A similar technique is used on smoke power or module input circuits to isolate ground faults.

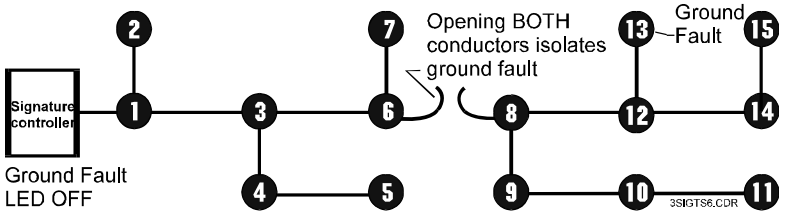

Figure 8-10: Ground fault isolation

If the LCD Ground Fault LED goes out, the ground fault is located on the portion of the circuit that has been disconnected.

If the LCD Ground Fault LED remains on and no devices restore, the short has been isolated to the first 50% of the circuit.

Re-connect the previously isolated portion of the circuit, and open the circuit at a new location. If during the first open circuit test the Ground Fault LED went off, open the circuit at a location “electrically farther” from the Signature controller module, and repeat the test. If during the first open circuit test the Ground Fault LED remained on, open the circuit at a location “electrically closer” to the 3-SSDC(1), and repeat the test. Continue to increase or decrease the number of devices on the opened circuit leg and you will eventually isolate a single device or wire segment that is causing the problem.

The ground fault detection circuitry requires approximately 30 to 40 seconds to respond when the fault is removed.

The panel performs a ground fault test for 2 seconds at 40-second intervals. If the system is working properly, the voltage between earth ground and logic negative should be between 12.3 Vdc and 16.8 Vdc during the 2-second test. The system reports a ground fault when the voltages are less than 12.3 and more than 16.8. In a non-faulted system, the voltage outside the 2-second test period may float randomly, but if the system is faulted the voltage is likely to be a fixed value such as 3 or 19.

Substituting known good Signature series devices

When substituting a “known good” detector or module in place of a suspect device, one of two scenarios can take place.

If the substituted device is the same model as the suspect device, the system accepts it with no further operator action. When the substituted device is installed, the system goes into trouble. When the quantity of devices defined on the circuit is reached, the system automatically remaps the circuit, stores the revised information, and returns to normal. This process may take a few minutes.

If the substituted device is a different model than the suspect device, when the device count is correct, the Signature controller module automatically remaps the circuit. A trouble occurs at the address of the suspect device as the result of a map fault, because the known good device’s parameters differ from those of the suspect device that was removed from the circuit. You must accept the parameters of the known good device to remove the map fault. These can be changed later.

You cannot use device substitution as a troubleshooting technique for Signature security devices. By design, the Signature controller does not automatically remap a replaced security device. This is intended to prevent swapping a security device with one that has been compromised for criminal purposes.

Detectors

When one or more devices are removed from a Signature Data Circuit for servicing, as shown in Figure 8-11, the panel will display a trouble condition for each device. If the System Definition Utility program (SDU) were connected to the panel, the DSDC Status screen would also indicate a trouble condition and the need to re-map.

If the detector is removed from an isolator base, the isolator will transfer.

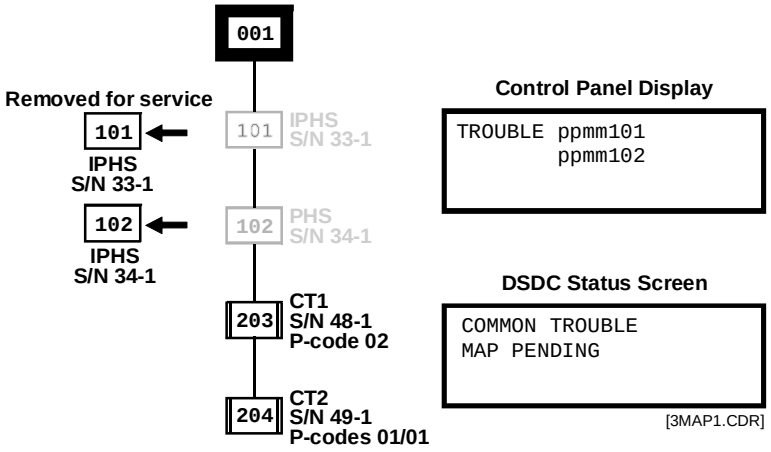

Figure 8-11: Detectors removed for service

If these devices are returned to their original locations, as shown in Figure 8-12, the map supervision function recognizes the detectors have been returned as originally installed (and mapped), and takes no additional action.

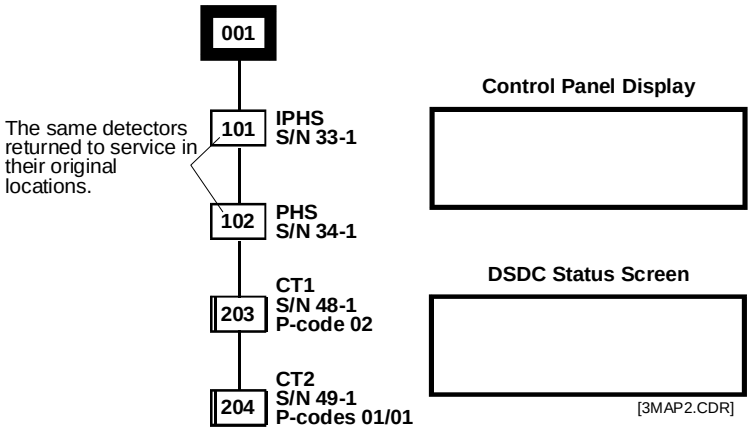

Figure 8-12: Detectors returned to service in original locations

If the devices are returned to the Signature Data Circuit but are not returned to their original locations, the map supervision function recognizes that previously mapped serial numbers occupy new map locations. Once the mapping supervision function has recognized the need to re-map the circuit, the panel is put in the “map pending” state. Once in the map pending state, the panel will automatically re-map the circuit when the quantity of devices re-installed on the circuit is equal to or greater than the quantity of devices defined in the original map. If the panel were connected to a computer running the SDU Program, the DSDC status function would indicate *map pending*.

In Figure 8-13, The PHS (S/N 34-1) originally installed at address 102 has been installed in the location originally occupied by the IPHS (S/N 33-1).

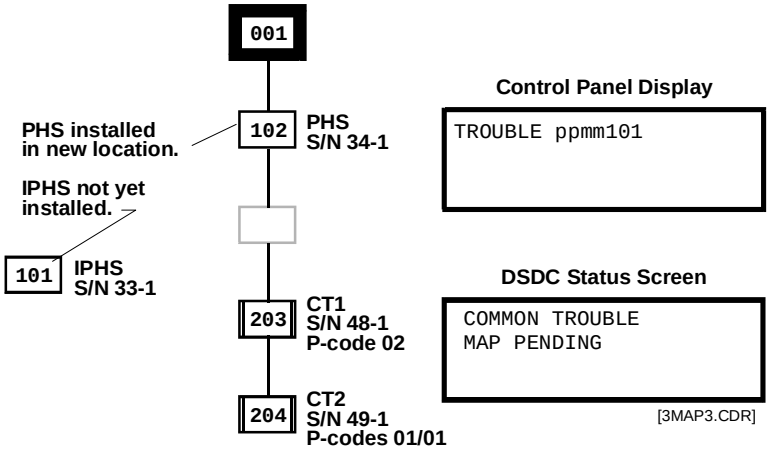

Figure 8-13: Partially restored circuit

Until all devices are re-installed on the circuit and the circuit is automatically re-mapped, the original S/N to panel address correlation is still valid. Examination of Figure 8-13 shows that the device address moves with the detector until the circuit is re-mapped. In this example, relocating the PHS detector temporarily relocated address 102. Until all devices are installed and the circuit re-mapped, testing a relocated detector will cause the panel to respond as though the detector was still installed in its original location.

During mapping, all devices remain operational and are capable of initiating an alarm. Figure 8-14 shows that both the IPHS and the PHS retain their old S/N to address correlations while the circuit is mapping. Mapping activity is indicated on the front panel display and the DSDC Status screen, if the data entry computer is connected.

Once mapped, the mapping supervision function will automatically correlate a panel address to a specific map location until manually changed using the data entry program.

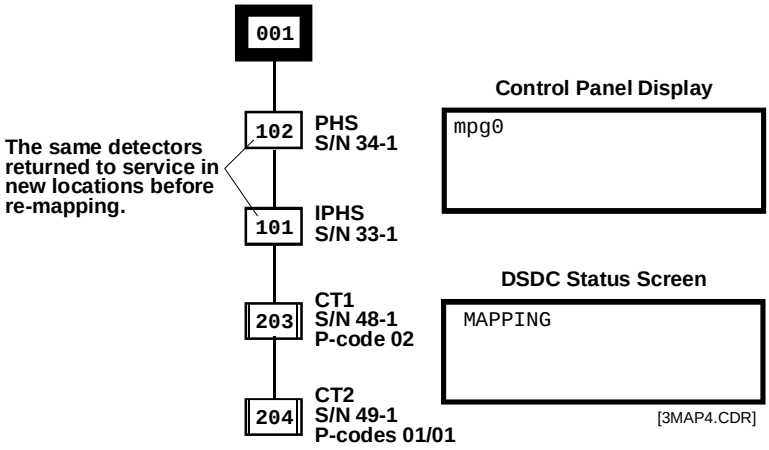

Figure 8-14: Detectors returned to new locations during re-mapping

Figure 8-15 shows the resultant map after re-mapping. Note that the new S/N to panel address correlations have been made, the IPHS is now correlated with address 102 and the PHS is correlated with address 101. The relocated devices will now respond as programmed for the original address location.

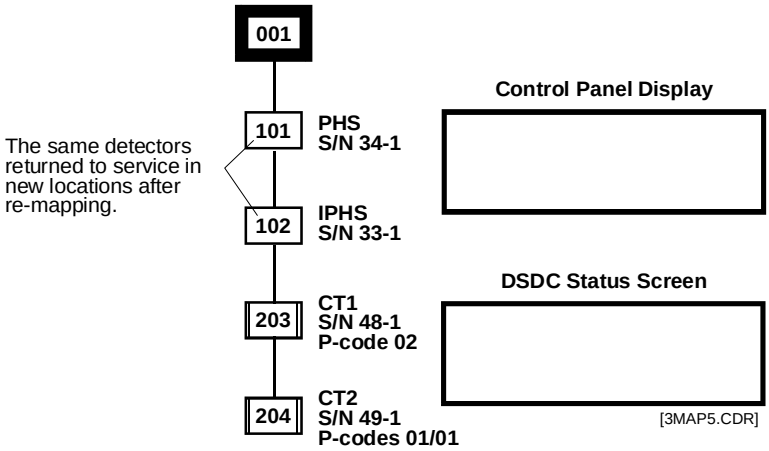

Figure 8-15: Final map

When a factory-new detector replaces an in-service detector, until mapped, the new detector is operational with a default address of 00. When the circuit is re-mapped, the new detector will be given the address assigned to its map location. If a factory-new detector is added over and above the expected number of devices on the circuit, it will be operational with a default address of 00, however the panel will be in trouble as the “actual map” contains one more device than the “expected map.”

Modules

When a module is replaced with another module of the same type, upon automatic re-mapping, the replacement module will be assigned the personality code of the module originally installed at that map location. If a module is replaced with a module of a different type one of three things can happen.

If you replace a single address module such as the SIGA-CT1, or SIGA-CC1, with a different type of single input module, the circuit will re-map all devices; however the new device type will not operate, due to incompatible personality codes. A map fault will be generated because the actual device differs from the expected device. The data entry program must be used to accept the new device type and clear the map fault.

Notes

- Do not replace factory-programmed devices such as pull stations and MM1 modules with a SIGA-CT1.
- For mapping purposes, give all manual pull stations the device type *pull*, regardless of their model numbers.

If a dual address module replaces a single address module, the panel will attempt to re-map all devices, however the circuit will not be successfully re-mapped. A map fault will be generated because the actual device differs from the expected device, and the dual address module will not operate. The data entry program must be used to accept the new device type and clear the map fault.

If a dual address module is replaced with a single address module, the panel will never attempt to re-map all devices because the panel does not see enough devices (one address less) to automatically re-map the circuit. The panel remains in the map pending mode and will not re-map. If the panel could be forced to re-map all devices, the circuit would still not be successfully re-mapped, because the actual device count differs from the expected device count. The panel will be in trouble with a map fault. The SDU program must be used to accept the new device type and clear the map fault.

Device type replacement

If a different Signature device model is substituted for the suspect device, when the device count is correct, the Signature controller module will automatically re-map the circuit. A trouble will occur at the address of the suspect device as the result of a map fault, because the known good device’s parameters differ from those of the suspect device that was removed from the circuit. You must accept the parameters, which may be changed later, of the known good device to remove the map fault.

Signature series devices require a solid connection at their terminals. If a wire can be wiggled, it will be subject to contact resistance variations due to temperature changes, resulting in an intermittent connection, which will affect communication between the Signature devices and the control module. Use the proper size screwdriver and tighten all connections securely.

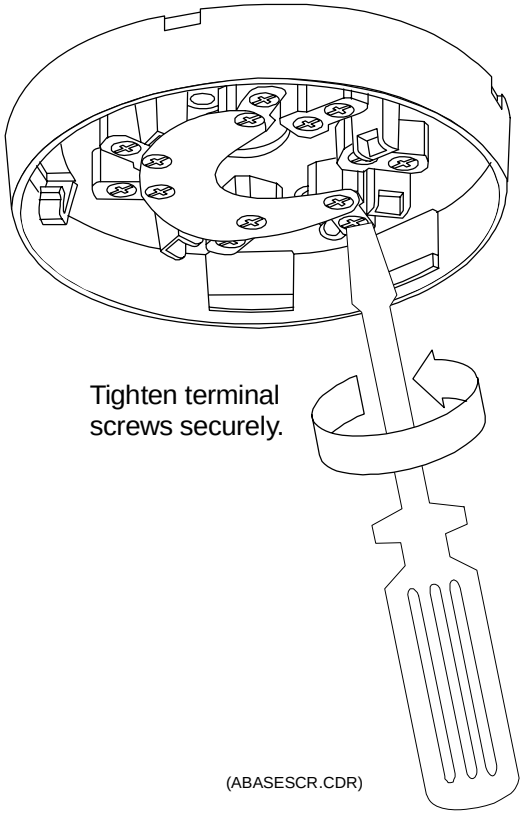

Signature controller modules

Substituting Signature controller modules

When substituting a “known good” Signature controller module in place of a suspect rail module, you must download the system configuration and Signature data circuit information into the CPU module. This operation requires a PC and the SDU Program.

The Signature controller module actually has two separate memories. The first memory contains the firmware that makes the module operate. If there is a problem with the firmware, or if an upgrade has been issued, the new firmware is downloaded into the module. When upgrading the module firmware (code), you do not need to download the “Bootstrap” data unless specifically instructed to do so.

The SDC configuration information is stored in the module’s second memory. If you suspect that the module itself is bad, you must download the configuration information for the circuit that will be connected to the substitute module.

The database must be converted before it can be downloaded into the Signature controller.

Table 8-29: Signature controller module troubleshooting

Problem	Possible cause
Signature Data Circuit Open	1. Circuit incorrectly wired or connector loose 2. Defective detector or isolator base 3. Broken conductor 4. Device not installed on circuit 5. Device not entered into SDU databases
Signature Data Circuit Shorted	1. Circuit incorrectly wired (often crossed wires on a device base) 2. Defective detector, detector base, or module 3. Nicked insulation between conductors
Signature Data Circuit Ground Fault	1. Pinched wire between device and electrical box 2. Nicked wire insulation

Mapping errors

Table 8-30 provides basic information on mapping errors. For detailed information on identifying and locating mapping errors, refer to the SSDC Diagnostic and Status sections found later in this chapter.

Table 8-30: Mapping errors

Fault	Possible causes
Mapping Error	1. A discrepancy between the internal map and the devices installed on the Data Circuit (serial #, personality code, or device type) 2. Device ID entered incorrectly into SDU database 3. More than 124 “T-taps” on a data circuit 4. Excessive circuit resistance 5. Excessive circuit capacitance
System continues to re-map data circuit	1. An intermittent connection causing one or more devices to loose then re-establish communication with the Signature controller module 2. A defective device or detector base
Device Type Error	1. There is a discrepancy between the device type recorded on the internal map and the device installed on the Data Circuit

Device troubleshooting

Each Signature series device has a red and green LED. Their functions are indicated in Table 8-31. These LEDs are useful when trying to determine the communication and alarm or active status of Signature devices.

Table 8-31: Signature device LEDs

LED	Device status
Green flashing	Normal communication
Red flashing	Alarm or Active (either input of dual input modules)
Red and Green steady	Stand-alone Alarm or Active (either input of dual input modules)

Table 8-32 lists common troubles and possible causes for Signature Series modules. For detailed information on identifying and locating Signature device problems, refer to the Signature Diagnostic Tools Section found later in this chapter.

Table 8-32: Signature module troubleshooting matrix

Module not responding correctly

CC1	CC2	CR	CRR	CT1	CT2	MM1	UM	WTM	Possible Causes
x	x	x	x	x	x	x	x	x	Module installed in wrong location or improperly addressed
x	x	x	x	x	x	x	x	x	Module not entered into Signature database
x	x			x	x		x		Incorrect personality code loaded into module
					x		x		Personality code for unused portion of module not set at 0 (P-codes 1, 2, 3, 4, 8, 13, 14, 16, and 18)
							x		Jumper JP1 set incorrectly (P-code 8)
							x		24 Vdc for smoke power low or missing (P-codes 3, 14, 18, 20, and 21)
					x		x	x	Inputs 1 and 2 swapped (P-codes 1, 2, 3, and 4)
	x								Signal sources 1 and 2 swapped (P-code 7)
x	x	x		x	x	x	x	x	Ground Fault on data circuit or (-) side of input / output circuit

Module in trouble on Signature controller module

Table 8-32: Signature module troubleshooting matrix

x			x	x	x	x	x	x	Module missing or incorrectly wired on Signature data circuit.
x			x	x	x	x	x	x	Mapping error. Module not loaded into Signature database
x				x	x	x	x	x	Ground Fault on input or output circuit
x	x						x		Output circuit open, shorted, incorrectly wired, polarized device installed in reverse, incorrect or missing EOL resistor
				x	x	x	x	x	Missing or incorrect EOL resistor (P-codes 1, 2, 3, 4, 13, 14, 16, 18, 20, 21)
							x		24 Vdc for smoke power low or missing (P-codes 13, 14, 18, 20, and 21)
Module incorrectly in alarm or active on Signature controller module									
				x	x	x	x	x	Initiating device circuit shorted or initiating device incorrectly installed
				x	x	x	x	x	Incorrect EOL resistor value (too low)

x = Applicable for module

This table also applies to equivalent M-series components and products that emulate these module types.

Table 8-33: Signature detector troubleshooting

Symptom	Possible causes
Detector not responding correctly	1. Detector installed in wrong location or improperly addressed. 2. Detector not entered in system database. 3. Incorrect device response in database.
Detector in trouble on CPU	1. Detector missing or incorrectly wired on Signature data circuit. 2. Mapping error. Detector not loaded into control module database. 3. Ground Fault on Signature Data circuit 4. Internal detector fault. Refer to Advanced Techniques Section.
Detector incorrectly in alarm on control panel.	1. Detector extremely dirty. 2. Ionization detector installed in area of extremely high airflow. 3. Detector installed in area of high ambient smoke. 4. Defective detector.

Signature diagnostic tools

The SDU Signature diagnostic tools are designed to assist the installing technician in isolating and correcting faults with the Signature Data Circuit (SDC), detectors and modules. The troubleshooting techniques described in the basic Signature troubleshooting section should be tried before using these tools.

Using Signature diagnostics

Tip: Signature diagnostic tools are on the SDU Tools menu.

To access the Signature diagnostic tools, Click Tools on the main menu bar, then click Signature Series diagnostics.

Signature device circuit selection

The Signature diagnostic tools affect only the SDC circuit that is specified in the drop down list boxes at the top of the DSDC Diagnostics window, as shown in Figure 8-16.

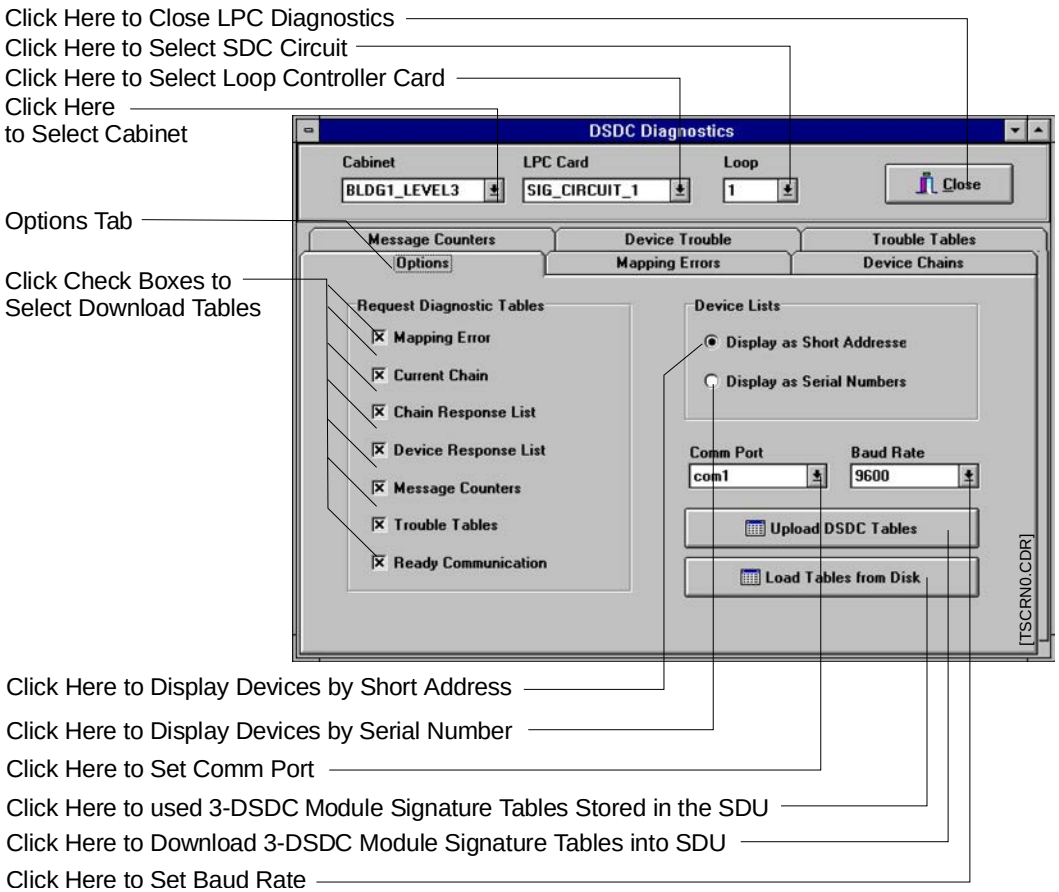

Figure 8-16: Options Screen

Select the cabinet that houses the Signature controller module with the trouble condition, using the Cabinet drop-down list.

Select the label of the Signature controller module with the trouble condition.

Select the loop (Signature Data circuit) on the module having the trouble condition, using the loop (SDC) drop down list.

COM port and baud rate

Note: You must upload Signature data from the Signature controller module into the SDU program before you can use the Signature diagnostic tools.

To use the Signature diagnostic tools, the information from the faulty Signature data circuit or device must first be read (uploaded) into the System Definition Utility (SDU) program. Use the COM Port and Baud Rate drop down lists to set the COM port parameters on the SDU computer that is to be used during uploading. The suggested baud rate is 19200.

Upload

To upload the Signature data from the Signature controller module into the SDU program, click the Download DSDC Tables button. When the Signature data has been downloaded from the Signature controller module, it is stored as part of the project. The Signature data can be recalled without being connected to the module by using the Load Tables from Disk button.

Serial number or short address

The devices listed in the diagnostic tables can be displayed by serial number or short address. You can mix short address and serial number displays using the Requested Diagnostic Table check boxes and the Device Lists radio buttons in combination.

Signature diagnostic sequence

Table 8-34 lists the suggested sequence when using the Signature Diagnostic tools to isolate problems on a Signature Data Circuit and problems with individual Signature devices.

Table 8-34: Signature troubleshooting tool sequence

SDC circuit faults	Signature device faults
1. Mapping Errors	1. Device Tables
2. Device Chains	2. Trouble Tables
3. Message Counters	

Displaying mapping errors

Mapping errors prevent the system from generating a successful Signature Data Circuit map. To display errors generated during the mapping process, click the Mapping Errors tab. The Mapping

Errors text box lists the eight (8) most recent mapping errors. The Total Errors field lists the total number of mapping errors that have been identified. Clicking on an error in the list highlights the error, and displays the appropriate troubleshooting tip in the lower Troubleshooting Tips text box.

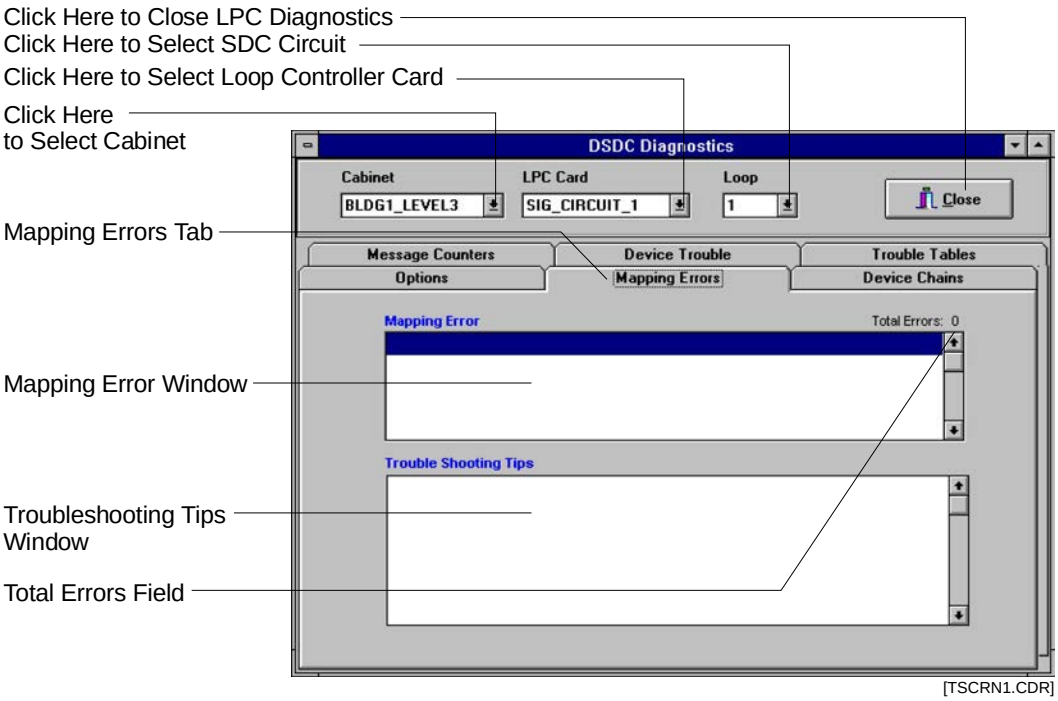

Figure 8-17: Mapping errors dialog box

Table 8-35: Mapping error messages

Message	Suggested corrective action
The mapping command failed because the sensor did not draw current or it was not possible to obtain stable mapping data from the SDC.	Indicative of faulty wiring on the circuit, or a faulty device. 1. Verify correct wiring. 2. Verify operational devices. 3. Review the Chain Response List. 4. Review the Device Response List.
While mapping a chain from a device back to the Signature controller module, the chain was built with “holes” in it.	Indicative of devices not operating consistently. 1. View the Chain and Device Response Lists to see a list of the devices that are present in the chain being processed. 2. Compare the serial numbers in the above lists with the actual wiring to identify a conflict.

Table 8-35: Mapping error messages

Message	Suggested corrective action
The map tables are inconsistent.	1. Upload the current map. 2. Compare current map with expected map. 3. Write the map back to the Signature controller module.
The actual SDC map does not match the stored expected map.	1. Upload the current map. 2. Compare current map with expected map. 3. Write the map back to the Signature controller module
Setting the Address in the device failed.	1. Review the Serial Number or Short Address. If missing, replace the device. 2. Persistent problem is indicative of a wiring fault.
Map supervision failure. The map in use has invalid data. This error initiates an automatic reconstruction of the map.	1. Please wait for automatic map reconstruction to complete before continuing.
Mapping supervision detected a change on the SDC. A rebuild of the map was scheduled.	1. Please wait for automatic map reconstruction to complete before continuing.
Mapping supervision detected that the device address or the short address of the device being supervised has changed. A rebuild of the map was scheduled.	1. Please wait for automatic map reconstruction to complete before continuing.
The mapping command failed, the sensor did not draw current or it was not possible to obtain stable mapping data from the SDC. A rebuild of the map was scheduled.	1. Please wait for the automatic map reconstruction to complete before continuing.
Mapping was aborted by an external event, such a new start on a device. A rebuild of the map was scheduled.	1. Please wait for the automatic map reconstruction to complete before continuing.
Mapping supervision detected that the Device Type of the Device being supervised has changed. A Map Fault was flagged.	1. Replace the device. 2. Correct the Signature controller module programming.
Mapping was aborted because there is short or open on the SDC wiring.	1. An open or short on a Class A circuit. 2. A short across the entire Class B circuit. 3. A Reset may be needed to restart mapping.
Unable to recreate current map at panel startup. The panel will re-map to reconstruct the map.	1. Please wait for the automatic map reconstruction to complete before continuing.

Table 8-35: Mapping error messages

Message	Suggested corrective action
Assignment of a short address to a device failed. This could lead to duplicate short addresses and mapping failures.	1. View the Chain and Device Response Lists to see a list of the devices that are present in the chain being processed and identify the failed device. 2. Replace the device. 3. Persistent problem is indicative of a wiring fault.
Mapping has been disabled.	1. Enable mapping.
While mapping a chain from a device back to the Signature controller module, the chain appears to have 2 devices at the same location in the chain.	1. Indicative of faulty wiring on the circuit, or a faulty device. 2. Review the Chain and Device Response lists to identify the conflict.
More than 125 End of Line devices have been found on the SDC.	1. Correct the wiring. 2. Re-map the circuit.
While mapping a chain from a device back to the Signature controller module, the chain was found to have a device present past the end of the chain. This indicates that at least one device is responding improperly to the mapping commands.	1. Click the Device Chains tab to see a list of the devices that are present in the chain being processed. 2. Compare the serial numbers or short addresses with the actual wiring to identify the problem.
Mapping has detected a difference between the device at the end of line and the devices in its chain.	This indicates that devices not communicating properly. 1. Click the Communication List tab to see a list of the devices that are communicating. 2. Compare the serial numbers or short addresses with the actual wiring, in order to identify the conflict.

Displaying device chain errors

A chain is a list of devices connected between the Signature controller module and a device being interrogated during circuit mapping. The chains and sub-chains created during the mapping process evolve into the circuit map.

Should a circuit fail to map properly, further insight into the problem may be gained by investigating the devices making up individual chains and sub-chains.

To display a chain generated during the failed mapping process, click the Device Chains tab. Four categories of device chains are listed. Each list displays the short address or serial number of the devices in the chain. The total number of entries in each list is indicated at the bottom of the list. To determine the position of a specific Signature device in the chain, click the small data entry box at the top of each column and enter the device's short address or serial number. The position field at the bottom of the column will indicate the selected device's chain position and the cursor will move over that device entry in the main list.

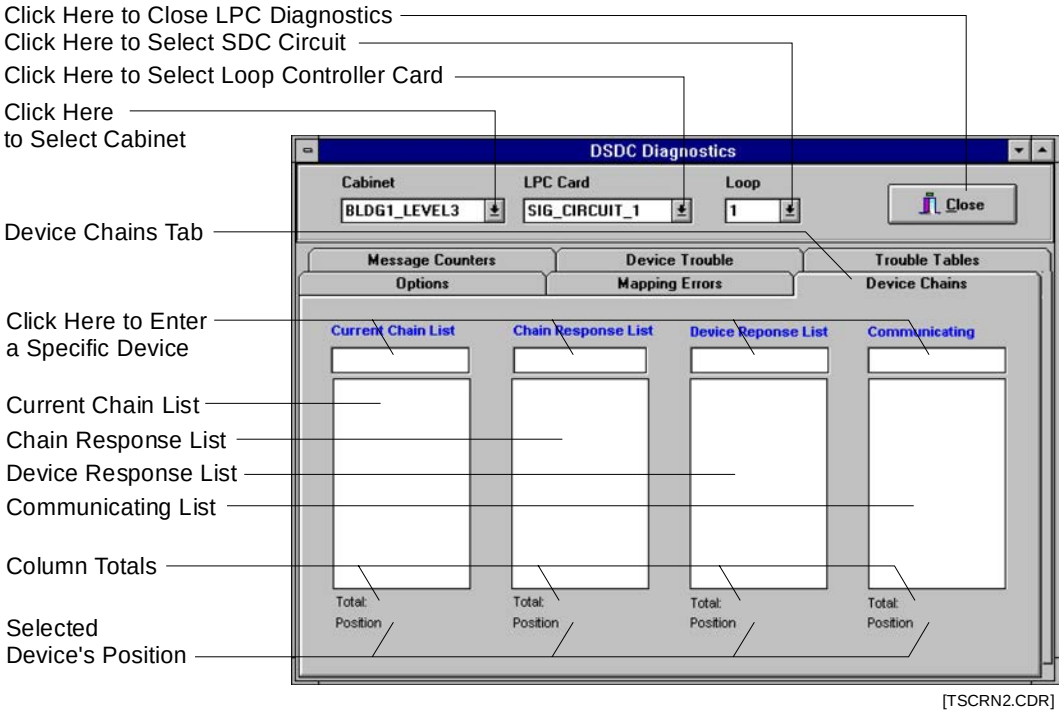

Figure 8-18: Device chains dialog box

Current chain list

The Current Chain List displays the sequence of Signature devices in the chain or sub-chain that was being created when the mapping failure occurred.

Chain response list

The Chain Response List displays the sequence of Signature devices in the *main chain*, when the mapping failure occurred.

Device response list

The Device Response List displays the sequence of Signature devices in a *sub-chain* that was being created when the mapping failure occurred.

Communicating list

The Communicating List displays a list of all Signature devices seen by the Signature controller module.

Using the chain lists

An element in the displayed chain caused the map fault. Examine the chain and look for gaps within the short address or serial number lists of a chain or sub-chain.

- Gaps in the list indicate areas that were not successfully mapped. A gap within the chain does not mean that the missing device has a problem, only that that device was not successfully mapped.
- Compare the Chain and Device response lists. All the devices on the Device Response list should also appear on the Chain Response list.
- Look for duplicate short addresses or serial numbers on the same list.

Failure of a device to successfully map may be the result of a problem with another device, or wiring in a chain or sub-chain not directly connected to the unmapped device. Although the missing or duplicate devices are not always the cause of map failure, good troubleshooting technique suggests that these devices be examined for defects, wiring errors, and duplicate entries in the SDU program, etc.

Displaying message counters

During normal operation, the Signature controller module issues numerous communication messages to the Signature devices on its SDCs. The message counters indicate how many times a communication message has been issued and the number of successful return messages.

To display the message counters, click the Message Counters tab.

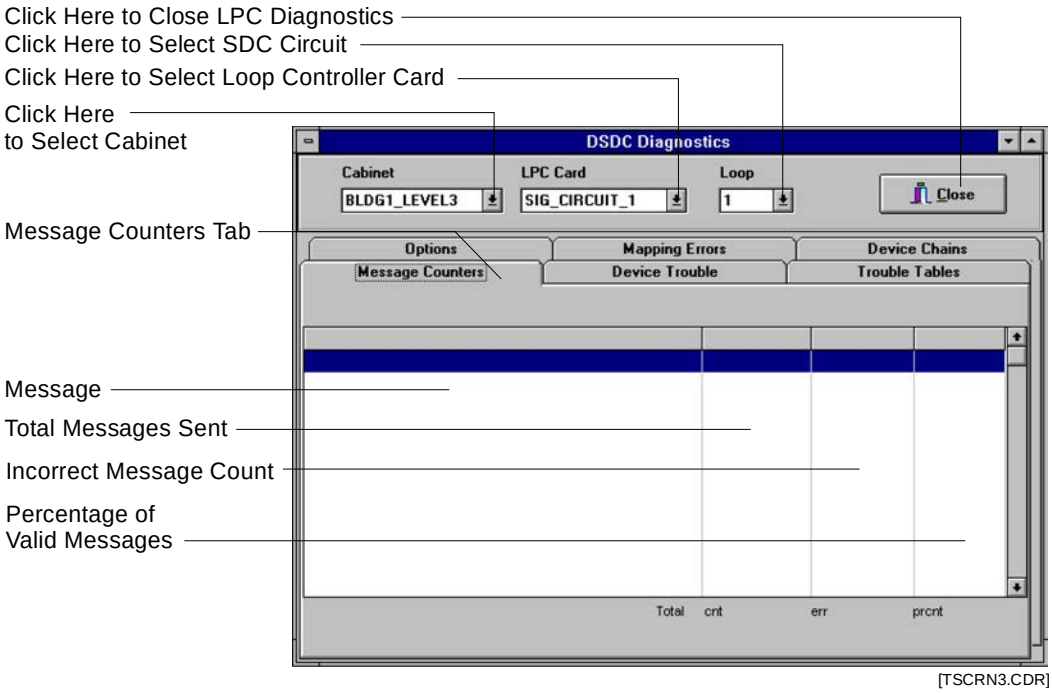

Figure 8-19**:** Message counters dialog box

The message command appears in the left column, followed by the number of times it has been issued, the number of errors received after the message was issued, and the percentage of correct responses. During normal operation, the percentage of messages received correctly should exceed 99%.

Intermittent device or wiring problems are indicated by a low successful message rate. If successful message rates are tracked over time, one can generate base line information for each circuit. From the base line information, any changes from the norm can be quickly identified, and preventive measures taken, before a communication problem develops. Table 8-36 lists the messages sent and received by the Signature driver controller module.

Table 8-36: Signature controller module Internal Messages

Query End Of Line	Query Relay Status	Find New Start
Query Isolator	Ground Fault Check	Find New Active
Query Status	Query Device Mask	Find New Unused2
Pulse Visible LED	Query Group Mask	Find New Unused3
Query Map Result	Module PFX	Reset Device
Query Alarm Status	Query Ready Comm	Enable Device
Query PreAlarm Status	Find Serial Number	Disable Device
Query Normal Status	Find New Alarm	Start Device

Table 8-36: Signature controller module Internal Messages

Query Trouble Status	Find New PreAlarm	Enable Visible LED
Query New Start Status	Find New Normal	Disable Visible LED
Query Active Status	Find New Trouble	Enable External Output
Disable External Output	Assign All Address	3-SDC Processor Status Query
Open Line Isolator	Relay Control	3-SDC Enable Loop
Close Line Isolator	Read Software Version	3-SDC Disable Loop
Reset Device Status	Read Device Status	3-SDC Line Initialization Complete
Move EEPROM to RAM	Read Sensor Values	3-SDC Send a Device Msg.
Assign Short Address	Read Specific Trouble	3-SDC Get a Device Reply
Assign Group Address	Read Value From RAM	3-SDC Configure Loop
Enter Service Mode	Send Value to Visible LED	3-SDC Query Current Configuration
Select Sensors	Query New Status	3-SDC Send Signal Rate
Write Value to RAM	3-SDC Command Initiate Reset	3-SDC Query Signal Status
Write Value to EEPROM	3-SDC Command Initiate Restart	

Displaying device trouble

Each Signature device is equipped with a 32-bit trouble register. Should a device's trouble bit be set *at any time in the device's history*, the device and the nature of the trouble will appear in the Latching Troubles By Device Address window. Clicking on the device will reveal a list of the trouble conditions affecting that device. Click the device a second time to remove the trouble listing.

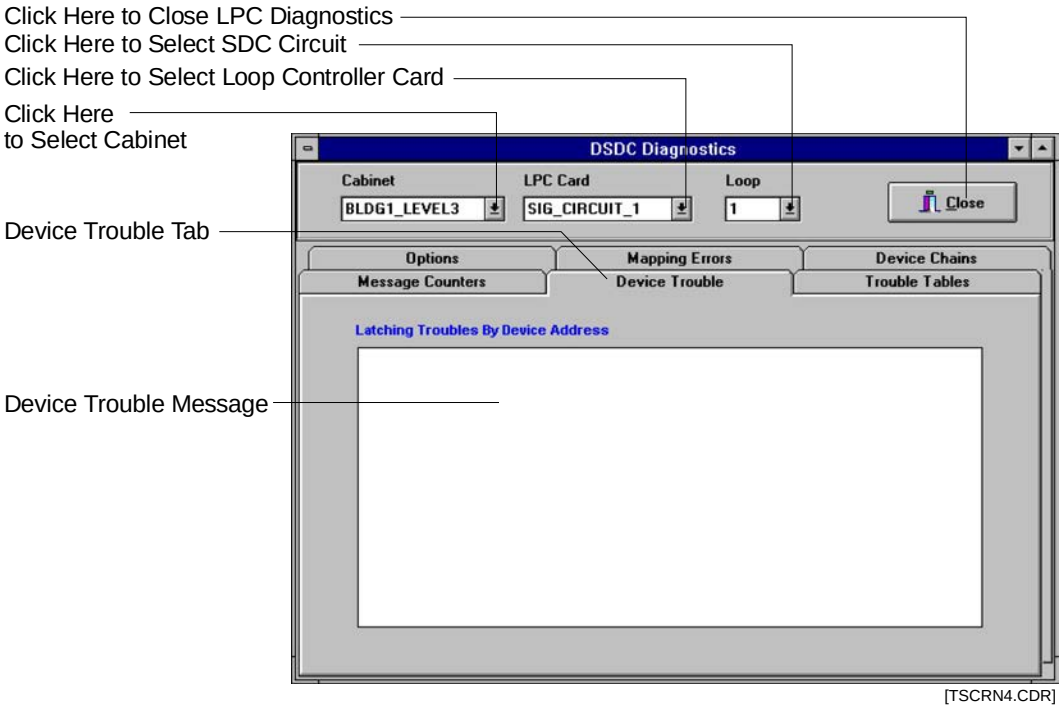

Figure 8-20**:** Device trouble dialog box

Table 8-37 below lists the Signature *Detector* trouble messages, and possible causes and solutions. Table 8-38 lists the Signature *Module* trouble messages, and possible causes and solutions.

Table 8-37: Signature detector trouble messages

Trouble message	Possible cause	Possible solution
External Device Line Short	Defective Detector	Replace Detector
External Device Line Open	Defective Detector	Replace Detector
Error XMIT Light	Detector Dirty	Clean detector
Device switched to short after isolator relay operated	Short on Signature data circuit	Locate and remove cause of short.
ESK Value Too Low	1. Dirty Detector 2. Bad Ion Chamber	1. Clean Detector 2. Replace Detector
ESK Slope Too High	1. Dirty Detector 2. Bad Ion Chamber	1. Clean Detector 2. Replace Detector
ESK Slope Too Low	1. Dirty Detector 2. Bad Ion Chamber	1. Clean Detector 2. Replace Detector
Quiescent Too Large	Devices on the Signature data circuit are drawing too much current during the mapping process.	Place a short or low resistance shunt across the data circuit.

Table 8-37: Signature detector trouble messages

Trouble message	Possible cause	Possible solution
Quiescent Too Small	Devices on the Signature data circuit are not drawing enough current during the mapping process.	Check the device wiring or replace the device.
Short on Relay Base	Bad Relay Base	Replace Relay Base
External or Isolator Relay Failure to Switch	Bad Base	Replace Base
External or Isolator Relay Switched	1. Bad Relay Base 2. External Electrical Noise	1. Replace Relay Base 2. Remove or Shield Noise Source
“O” Value Too Small	Bad Base	Replace Base
Ion Rate-of-Rise Too High	Bad Ion Chamber	Replace Detector
Ion Quiescent Too High	Dirty Detector	Clean Detector
Ion Quiescent Too Low	Dirty Detector	Clean Detector
Ion Value Too Low	Defective Detector	Replace Detector
Thermal Value Too High	Bad Base	Replace Base
Thermal Value Too Low	Bad Base	Replace Base
A/D Converter Fault	Defective A/D converter	Replace Detector
EEPROM Checksum Error	Bad EEPROM	Replace Detector
EEPROM Write Time-out	Bad EEPROM	Replace Detector
Unknown Device Type	Bad EEPROM	Replace Detector
EEPROM Write Verify Fault	Bad EEPROM	Replace Detector
Ambient Light Too High	1. Dirty Detector 2. Outside light reaching detector chamber	1. Clean Detector 2. Eliminate light source
Photo Quiescent Too High	Dirty Detector	Clean Detector
Photo Quiescent Too Low	Dirty Detector	Clean Detector
Photo Value Too High	Bad Base	Replace Base

Table 8-38: Signature module trouble messages

Trouble message	Possible cause	Possible solution
Open data Circuit	See Table 8-32	See Table 8-32
Shorted data Circuit	See Table 8-32	See Table 8-32

Table 8-38: Signature module trouble messages

Trouble message	Possible cause	Possible solution
Relay switched	Relay toggled from actual state	Manually reset relay Replace Module
Data circuit ground fault	See Table 8-32	See Table 8-32
Vector Current Too Large	Devices on the Signature data circuit are drawing too much current during the mapping procedure.	Short or low resistance shunt on Signature data circuit
Vector Current Too Small	Devices on the Signature data circuit are not drawing enough current during the mapping procedure.	Excessive circuit resistance Defective base Defective wiring
EEPROM Not Initialized	EEPROM not properly programmed	Replace module
EEPROM Write Time-out	Bad EEPROM	Replace module
A/D Time-out	Defective A/D converter	Replace module
EEPROM Write Verify Fault	Defective EEPROM	Replace module
Line Monitor Trouble	Signature data circuit voltage low	Check Signature data circuit
Class A Trouble	Open or shorted input or output circuit	Check input / output circuit wiring
3rd Wire Trouble	Voltage is out of range on the wire that supplies 24 Vdc power to SIGA-UM.	Check power supply output Check wiring
3rd Wire Trouble	Voltage on the wire supplying 24 Vdc smoke power to SIGA-UM is out of range.	Check power supply output. Check wiring
RAM Not Programmed	Bad RAM	Replace Module

Displaying trouble tables

Note: You must be actively connected to the network via download cable to display the trouble tables.

The Trouble Tables display eight categories of *active* device trouble. Each list displays the short address or serial number of the devices experiencing that trouble condition. The total number of devices in each list is indicated at the bottom of the list.

The active troubles displayed in the Trouble Tables should be compared with a device's trouble history displayed in the Display Device Trouble lists, to determine any possible trouble pattern.

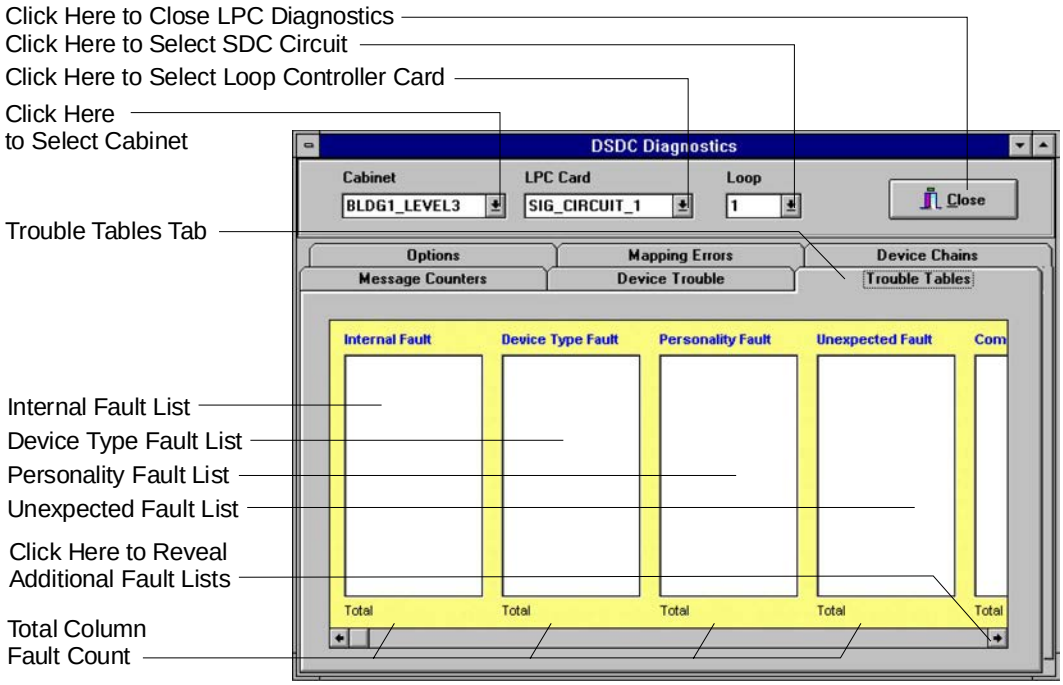

Figure 8-21: Trouble Tables dialog box

Internal fault

The Internal Fault List indicates an internal problem with a Signature Device or Module. Refer to the Displaying Device Trouble section to determine the specific cause.

Device type fault

The Device Type Fault List indicates that the device type entered in the SDU does not agree with the device type installed on the SDC.

Personality fault and sensitivity fault

The Personality Fault List indicates that the personality code (p-code) of a Signature module entered in the SDU does not agree with the p-code of the module actually installed on the circuit. The Sensitivity Fault List indicates that the sensitivity of a Signature detector entered in the SDU does not agree with the sensitivity of the detector actually installed on the circuit.

Personality and sensitivity faults should be corrected by the system, and these faults should clear automatically.

Unexpected fault

The Unexpected Fault List displays the serial number of devices which appear on the actual circuit, but which were not listed in the SDU program.

Communication fault

The Communication Fault List indicates those Signature devices that are not communicating with the Signature controller module.

Open fault

The Open Fault List indicates those Signature modules with an open on their input or output circuits (all p-codes except 8.)

Ground fault

The Ground Fault List indicates those Signature modules with a ground fault on their input or output circuits (all p-codes except 8.)

Short fault

North American marketplaces: The Short Fault List indicates those Signature modules with a short on their supervised output circuits (p-codes 5, 7, 15, 16.)

European marketplace: The Short Fault List indicates those Signature modules with a short on their supervised input circuits (p-codes 1, 2, 3, 4, 9, 10, 11, 12, 13, 14, 20, 21) and those Signature modules with a short on their supervised output circuits (p-codes 5, 7, 15, 16.)

Brand fault

Incorrect brand of Signature devices installed on SDC.

DSDC status

Introduction

The DSDC status function is used to determine the *real-time* status of a Signature Data Circuit (SDC). This function is useful in isolating and correcting faults on an SDC. The DSDC status function is useful in conjunction with the download and DSDC diagnostic functions.

Setting up the System Definition Utility program

In order to use the DSDC Status function, the computer running the SDU program must be connected to the 3-SSDC(1). The appropriate communication port must be connected to the modular phone jack on the Signature controller module or on the CPU module.

Com port and baud rate settings can be made directly from the DSDC Status window. The default baud rate is 9600 baud.

Using DSDC status

To access the DSDC Status function, click Tools > Signature Status.

Select the SDC to be monitored by using the Cabinet, SSDC, and Loop drop down lists.

The Delay drop down box sets the interval at which the status screens receives updated information from the Signature controller module. The default value is 3 seconds. Increasing the delay time permits the module to process more information between reports to the SDU, thus decreasing the overall time it takes to generate a full status report.

To start the DSDC Status function, click the Start Status Button. Should the Confirm window appear after a short delay, the SDU computer is not communicating with the 3-SSDC(1).

Verify the module address, download wiring, COM port, and baud rate are set correctly and click the retry button. If communications fail when connected to the module via the CPU, try connecting directly to the modular phone jack on the Signature controller module.

Displaying the current SDC status

Click the Current Status Tab at the bottom of the window to display an annunciator panel showing the real-time status of the connected SDC. Refer to Table 8-39 to interpret the indicators.

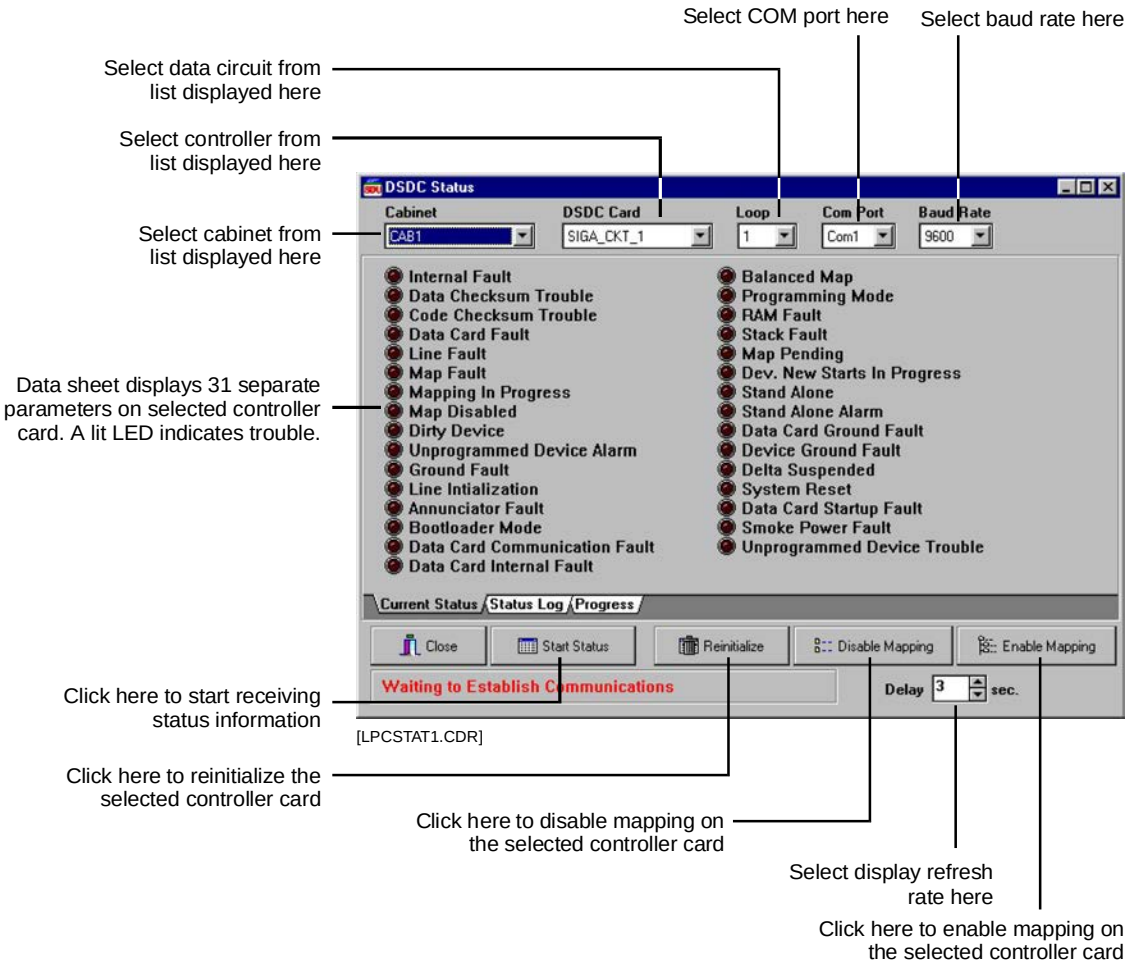

Figure 8-22: DSDC Status dialog box

Table 8-39: Current status parameters

Indicator	Function
Internal Fault	Signature controller module hardware problem
Data Checksum Trouble	Configuration data bad
I/F Fault	3-SDC Card hardware problem
Line Fault	SDC open or shorted
Map Fault	Memory contents differ from actual SDC device conditions.
Mapping in Progress	The Signature controller module is currently mapping the SDC
Map disabled	The mapping process has been manually turned off

Table 8-39: Current status parameters

Indicator	Function
Dirty Device	A dirty smoke detector has been identified
Unconfigured Alarm	The module has detected an alarm on a device which is not in its database
Line Initialization	SDC power on phase, devices not supervised
Serial Table Full	Indicates when data controller card needs to be reinitialized
I/F Communication Fault	Signature controller module to 3-SDC communication problem
I/F Internal Fault	3-SDC card hardware problem
Balanced Map	Two or more device strings appear identical to the system.
Programming Mode	Signature controller module in upload or download mode
RAM Fault	Internal memory problem
Stack Fault	Internal program error
Map Pending	Ready to map SDC when SDC conditions warrant
Dev. New Starts in Progress	The Signature controller module is processing a new SIGA device start up
Stand Alone	The SDC is in the stand alone mode
Stand Alone Alarm	The module has detected an alarm while in the stand alone mode
Ground Fault	The SDC wiring has low resistance continuity to ground
Device Ground Fault	A SIGA module IDC/NAC has low resistance continuity to ground
Delta suspended	Module in reset phase. No changes reported by Signature controller module

Displaying a log of current SDC status events

Click the Status Log Tab at the bottom of the window to display a chronological list of the events that occurred on the SDC after the Start Status Button was activated.

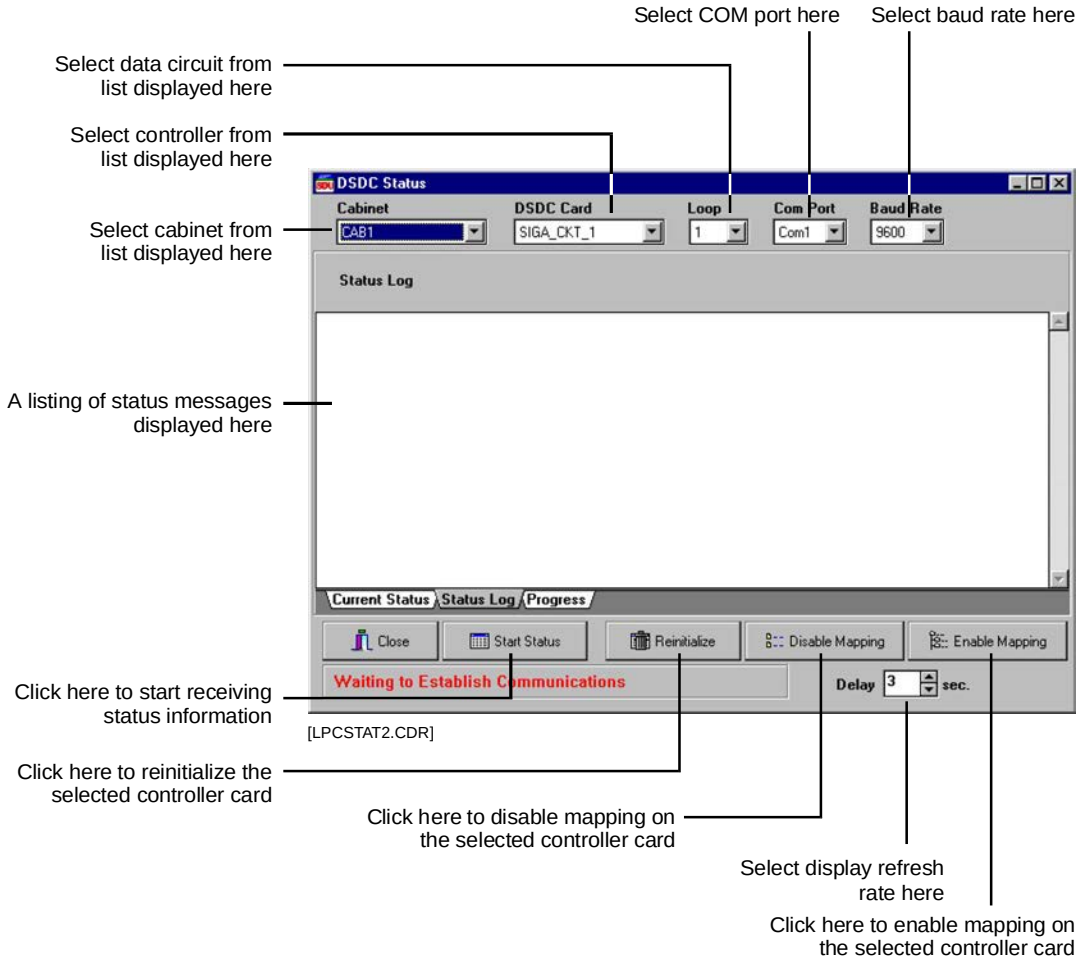

Figure 8-23: DSDC status event log

Displaying the SDC in-process progress chart

Click the Progress Tab at the bottom of the window to display a graphical presentation of the five major processes that take place during SDC configuration:

- Finding device serial numbers
- Communicating with individual devices
- Mapping the devices
- Verifying the End Of Line (EOL) status of a device
- Programming parameters into a device's memory

This display is useful in determining an overall picture of SDC configuration activity.

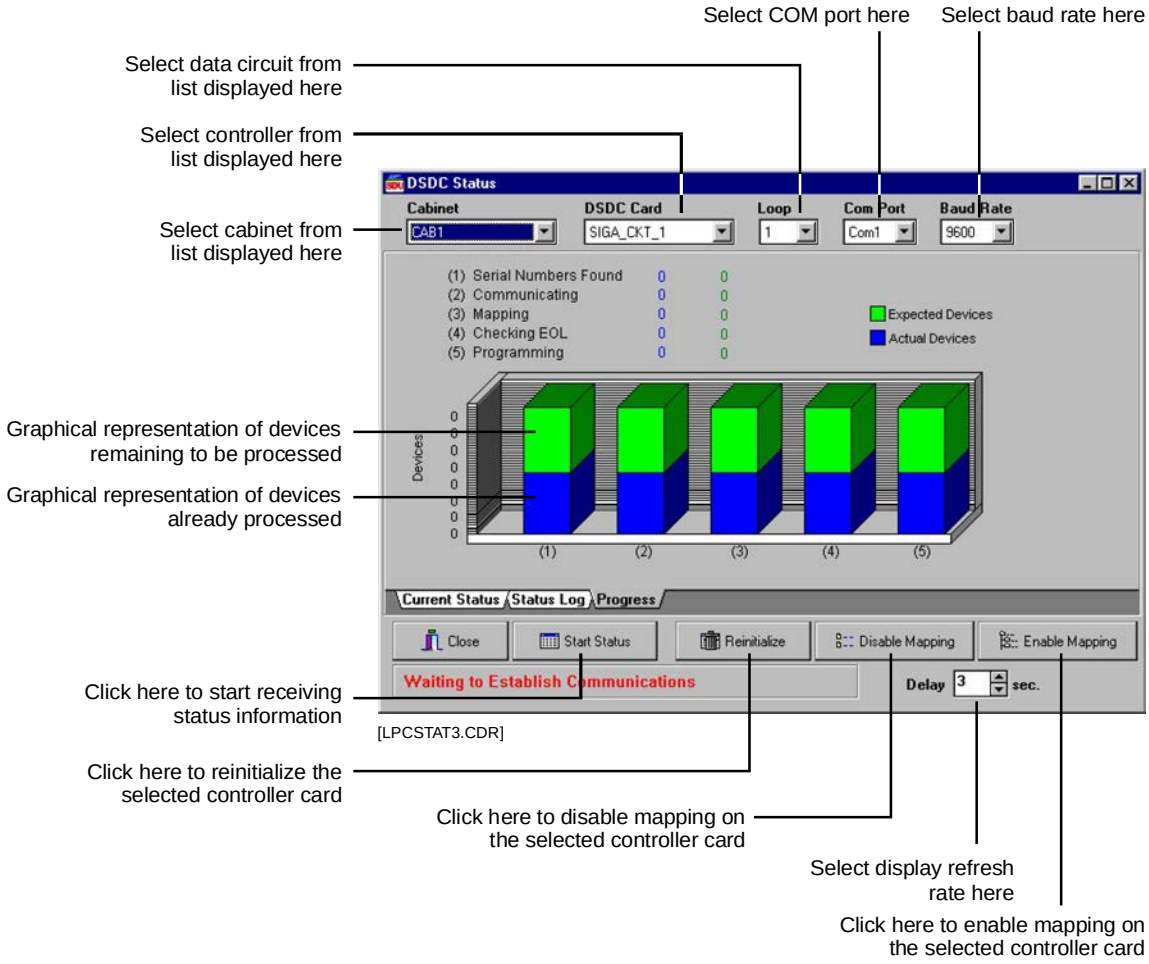

Figure 8-24: DSDC in-process progress chart

Addressable analog diagnostic tools

The SDU addressable analog diagnostic tools are designed to assist in isolating and correcting faults with addressable analog circuits, detectors, and modules.

System definition utility

The quickest method for isolating most common problems is with the Systems Definition Utility (SDU) diagnostic tools.

1. Connect the computer that runs the SDU to the system, and open the appropriate project.

   If the actual project is not available, create a phantom project with an empty 3-AADC1 circuit and connect directly to the module in question.

2. From the menu bar, select Tools > System Sensor > Diagnostics.
3. On the Options tab, clear the selection from Message Counters, and upload. Trouble Tables, Ready Communication, and Display as Device Addresses should be selected.
4. Click: Upload AADC Tables.
5. Select the Status Tables tab when the table upload is complete.

Addressable analog diagnostic table interpretation

Each table lists the addresses for the modules and sensors reporting the associated condition with a total at the bottom. When displayed as Device Addresses, sensor addresses correspond with the rotary switch setting, and modules are reported as 100 plus the rotary switch setting. Multiple faults will make the process more difficult but the addresses noted in the fault tables make an excellent starting point

Table 8-40: Addressable analog diagnostic table interpretation

Table Name	Description	Possible causes
Communicating Devices	Lists sensor and module addresses talking to the 3-AADC1.	Total number of communicating devices should equal number of installed devices. If total is low, see Communication Fault table for missing or not connected device(s). If total is high, see Unexpected Fault table for extra device(s) installed on circuit.
Internal Fault	Devices reporting an internal failure	Replace device

Table 8-40: Addressable analog diagnostic table interpretation

Table Name	Description	Possible causes
Device Type Fault	The wrong device type for the current configuration.	Photo detector installed for ion detector Ion detector installed for photo detector Monitor module installed for control module Control module installed for monitor module Two device addresses are transposed.
Unexpected Fault	A device is reporting at an unconfigured address. All unconfigured addresses are polled at startup and at 10-minute intervals thereafter.	If the total number of Communicating Devices is correct, and a Communication Fault is reported, the Unexpected Fault device should be set to the address listed as a Communication fault.
Duplicate Device Fault	Two or more devices have the same address.	If the total number of Communicating Devices shown in the table is correct, a device has been assigned the same address as a configured device. If the total number of Communicating Devices is too low, and a Communication Fault is reported, the device in the Communication fault table is addressed at the location shown in the Duplicate Device table.
Communication Fault	Missing device.	Wiring error or device not installed If Communicating Devices table short by one and Duplicate Device fault exists, then address shown in Comm Fault table is addressed at location shown in Duplicate Device table. OR If Communicating Devices table OK and Unexpected Fault exists, then the Unexpected Fault device should be set to the address shown in the Communication Fault table.
Open Fault	Module field wiring is open.	Circuit incorrectly wired or connector loose Defective detector or isolator base Broken conductor Device not installed on circuit Device not entered into SDU databases
Short Fault	Module field wiring is shorted.	Circuit incorrectly wired Defective detector, detector base, or module Nicked insulation between conductors

Table 8-40: Addressable analog diagnostic table interpretation

Table Name	Description	Possible causes
Compatibility Fault	Incorrect brand of device installed, replace device.	SIGA, GSX, or XLS brand devices intermixed on circuit.

Problem solving hints

Addressing faults

Most addressing faults are quickly located because the wrong address gives a clue as to the fault location. For example module 164 is duplicated while module 174 is missing. The device at location 174 probably has its tens digit addressing switch off by one position.

Duplicate device faults are harder to locate, e.g. the carpenter put up a partition hiding sensor 53, then the electrician noticed it was missing and spliced in a new base and now there are two sensors at address 53.

To identify devices with duplicate addresses, remove one of the suspected duplicate sensors. The duplicate fault should clear within 30 seconds if the sensor removed is a duplicate. Disconnect half of the circuit. Allow a minute or so for the circuit to stabilize and the faults to report. Upload the “Ready Communication” diagnostics table only. The remaining duplicate sensor, 53, should still appear, as if it is physically connected between the circuit controller and the wiring break. Continue to add or remove segments of the circuit in gradual increments repeating the diagnostics upload until the physical location of the problem detector is located.

Intermittent communication and wiring faults

EST3 counts of the number of communications and errors associated with each device. You can use this information to diagnose problems.

- A message counter tracks the number of communications sent between each device and the 3-AADC1 controller.
- An error counter tracks the number of communications failures occurring between each device and the 3-AADC1 controller

Both counts return to 0 each time the controller is restarted. You can use these To help to isolate a problem, compare the number of messages sent to a specific device to the number sent to a neighboring device of the same type.

Devices are polled each time the system is started, and any time an object reports its status as trouble or alarm. Polling frequency

differs for different objects and circumstances. Pull stations are polled much more frequently than detectors or modules. Devices that report communication failure are polled more often than devices that are not experiencing the failure.

- Devices with high message counts but few errors may be pull stations or devices that change state regularly such as monitor modules.
- Devices that have increased error counts and only marginally increased message counts may indicate wiring or device problems.
- Devices with low message counts and an equal number of errors are non-existent devices.
- All 198 addressed are polled occasionally to identify any devices that may have been installed and not configured.

If the message and error counts are confused because of the length of time the circuit has been running, restarting the panel will cause a restart of the circuit and the zero the counters. You may need to monitor the circuit for twenty minutes or more before a trend in messages becomes apparent. Locating intermittent faults may require extended operating periods.

3-AADC1 Addressable Analog Driver Controller

Substituting 3-AADC1 local rail modules

When substituting a known good 3-AADC1 rail module in place of a suspect rail module, you must download the system configuration and Addressable Analog circuit data circuit information into the CPU module. This operation requires a PC and the SDU Program.

The 3-AADC1 actually has two separate memories. The first memory contains the firmware that makes the module operate. If there is a problem with the firmware, or if an upgrade has been issued, the new firmware is downloaded into the module using the 3-AADC1 Code tab, which is found in the Version Control (Code) function of the Tools, Download menu. When upgrading the module firmware (code), you do NOT need to download the "Bootstrap" data unless specifically instructed to do so.

The SDC configuration information is stored in the module's second memory. If you suspect that the module itself is bad, you must download the configuration information for the circuit that will be connected to the substitute module, using the 3-AADC1 Database tab, which is found in the Version Control (Database) function of the Tools, Download menu.

Connect the PC to the CPU RS-232 connector J5.

Table 8-41: 3-AADC1 Local Rail Module troubleshooting

Problem	Possible cause
Analog Circuit Open	1. Circuit incorrectly wired or connector loose
	2. Defective detector or isolator base
	3. Broken conductor
	4. Device not installed on circuit
	5. Device not entered into SDU databases
Analog Circuit Shorted	1. Circuit incorrectly wired
	2. Defective detector, detector base, or module
	3. Nicked insulation between conductors
Analog Circuit Ground Fault	1. Pinched wire between device and electrical box
	2. Nicked wire insulation

Addressable analog device troubleshooting

Each addressable analog device has an integral Red LED. The function of this LED is indicated in Table 8-42. The LED is useful when trying to determine the communication and alarm or active status of a device.

Table 8-42: Addressable analog device LEDs

LED	Device status
Flashing Red	Polling device
Steady Red	Alarm or Active

Table 8-43 lists common troubles and possible causes for addressable analog modules.

For detailed information on identifying and locating these errors, use the SDU program's Addressable Analog Diagnostic Tools. Information about these tools appears later in this chapter.

Table 8-43: Addressable analog module troubleshooting matrix

M500 MF	M501 MF	M500 CF	M500 XF	Possible Causes
Module not responding correctly				
x	x	x	x	Module is installed in the wrong location or is improperly addressed
x	x	x	x	Module has not been entered into 3-AADC1 database
-	-	x	-	Break-off tab is set incorrectly
x	x	x	x	A ground fault has occurred on data circuit or (-) side of input / output circuit
Module in trouble on 3-AADC1 circuit				
x	x	x	x	Module is missing or is incorrectly connected to the circuit
x	x	x	x	ID error. Module has not been loaded into the 3-AADC1 database.
x	x	x	x	A ground fault has occurred on input or output circuit
-	-	x	x	The output circuit may be open, shorted, or incorrectly wired. A polarized device may be installed in reverse. The EOL resistor may be missing or incorrect
x	x	x	x	Missing or incorrect EOL resistor
Module incorrectly in alarm or active on CPU/LCD module				
x	x	-	-	Initiating Device Circuit may be shorted, or an initiating device is incorrectly installed

x	x	-	-	EOL resistor value is too low

x = Applicable
- = Not applicable

Table 8-44: Addressable analog detector troubleshooting

Symptom	Possible causes
Detector not responding correctly	1. Detector installed in wrong location or improperly addressed 2. Detector not entered into system database 3. Incorrect device response in database
Detector in trouble on CPU/LCD	1. Detector missing or incorrectly wired on circuit 2. ID error. Detector not loaded into 3-AADC1 module database. 3. Ground Fault on circuit 4. Internal detector fault
Detector incorrectly in alarm on CPU/LCD	1. Detector extremely dirty 2. Ionization detector Installed in area of extremely high airflow 3. Detector installed in area of high ambient smoke 4. Defective detector

For detailed information on identifying and locating device problems, refer to topic “Addressable analog diagnostic tools,” earlier in this chapter.

Wiring problems

There are three basic causes of wire-related erratic Addressable Analog circuit operation:

Excessive wiring resistance

Rarely is excessive wiring resistance the sole cause of Addressable Analog circuit problems. For any length of cable, the amount of resistance and capacitance per foot doesn't change and the Addressable Analog circuit capacitance limits are usually reached before the resistance limits. The digital signal operates between 0 and 24 Vdc. Excessive circuit resistance causes the signal to shrink from a maximum of 23 Vdc to a lower voltage, for example 20 Vdc. The 3-volt drop in the wiring is due to wire resistance.

To measure Addressable Analog circuit voltage drop, use an oscilloscope to measure the peak voltage at the Addressable Analog module and at each analog addressable device. If the voltage difference is greater than 2 Vdc, the resistance in the wire run is excessive. Too much resistance in the Addressable Analog wire run is typically caused by small wire size or a bad connection.

If the wire size is too small for the run length, the only remedies are to replace the wire with a larger size, or install additional Addressable Analog modules, dividing the circuit into acceptable lengths. Breaks or bad connections in the Addressable Analog circuit wiring can be identified by comparing the calculated circuit resistance value (described earlier) with the measured circuit resistance value. The measured wiring circuit resistance should not be different from the calculated circuit resistance by much more than a few ohms.

Excessive wiring capacitance

The second cause of erratic Addressable Analog circuit operation is too much capacitance in the Addressable Analog circuit wiring. Capacitance distorts the digital signal. As wiring capacitance increases, the square edges of the digital waveform start to curve. Excessive wiring capacitance causes the waveform to curve beyond the point where a device can recognize the waveform and respond when polled.

Wiring capacitance also effects the turn-on current spike. If the turn on current spike is not present in the digital sequence, there is a high probability the analog addressable device's communication will not be understood by the Addressable Analog communication module.

Addressable Analog circuit capacitance problems are typically caused by long wire runs, ground faults on the Addressable Analog circuit, improper T-taps, or improper shielding.

If shielded wire is used, the shield must be treated as a third conductor. It must be free of all ground faults and have continuity throughout. If the wire capacitance is too large for the run length, the only remedies are to replace the wire with a cable having a lower capacitance per foot or install additional Addressable Analog modules, dividing the circuit into acceptable lengths.

Ground faults

Eliminating ground faults on the Addressable Analog circuit reduces the amount of capacitance on the Addressable Analog wiring.

Verify the Addressable Analog circuit is free of ground faults.

Correcting addressable analog circuit wiring problems

If the Addressable Analog circuit is wired with improper T-taps or excessive capacitance, corrective measures include:

- Designing the Addressable Analog circuit properly and re-pulling the wire
- Balancing the circuit. Balancing the circuit can help in some cases but is not a substitute for proper wiring practice. If circuit balancing is required, call Technical Services for additional information.

Appendix A

System addresses

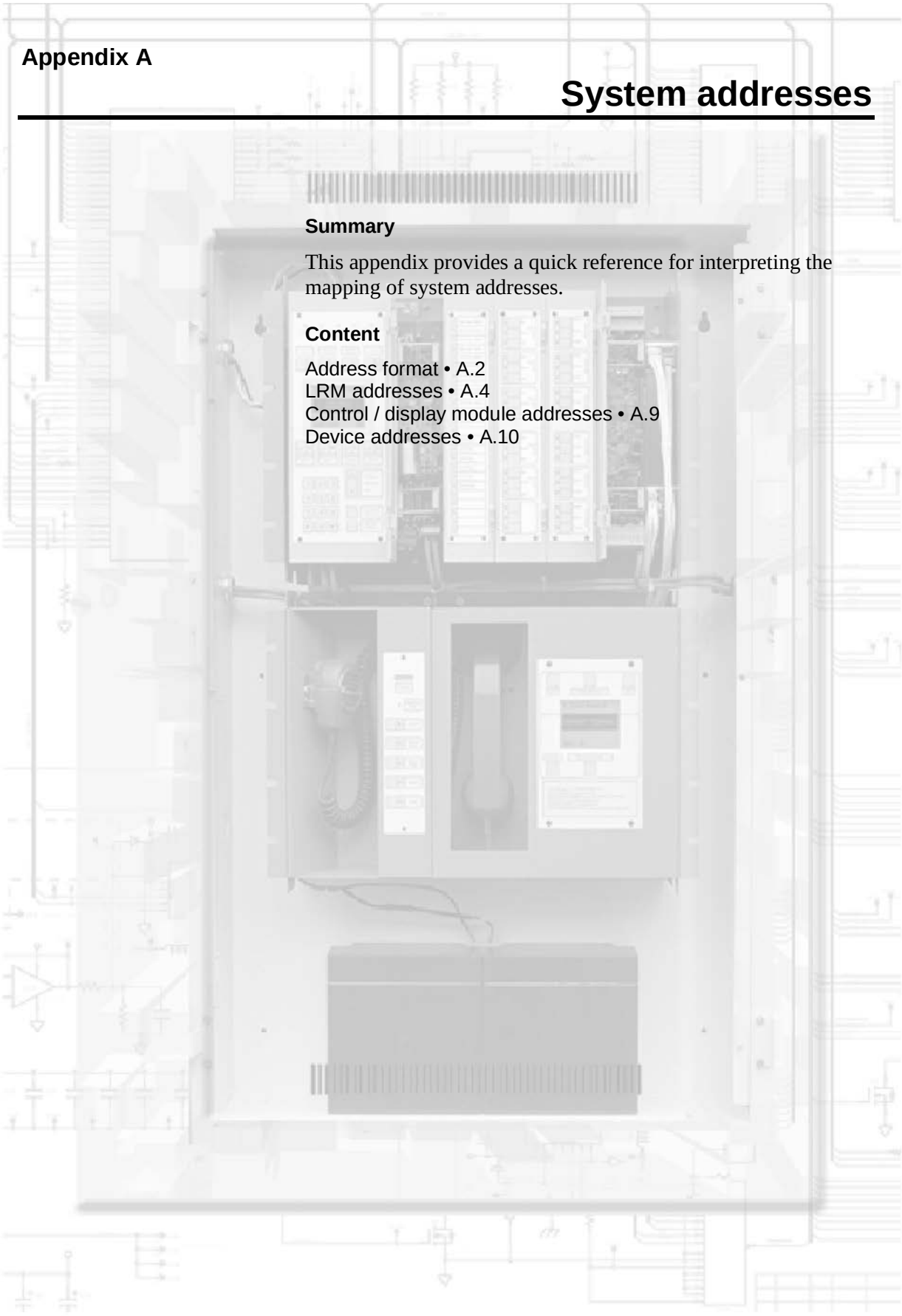

Summary

This appendix provides a quick reference for interpreting the mapping of system addresses.

Content

Address format • A.2
LRM addresses • A.4
Control / display module addresses • A.9
Device addresses • A.10

Address format

Tip: To determine a local panel's cabinet number, use the LCD command menu to get the status on all the active points on the panel. When prompted for a panel number, enter 00. The panel returns the startup response point's logical address. The first two numbers of the logical address is the cabinet number.

The system derives the addresses it assigns from the panel's cabinet number and the LRM's location within the panel (see Figure A-1). The basic address format is PPCCDDDD, where:

PP is the panel's cabinet number. The cabinet number is assigned when the installer downloads the CPU database into the panel.

CC is the LRM's slot address. The cabinet number and the slot address make up the LRM's logical address.

DDDD is the device's point address. The LRM's logical address and device's point address make up the device or circuit's logical address.

The CRC Card Reader Controller and KPDISP Keypad Display are devices supported by a 3-SAC module. However, they also act as independent processors, and have their own pseudo points. For this reason, their device numbers are further subdivided.

You can think of a SAC device as having this address format: PPCCSSDD: SS is the CRC or KPDISP device number, as assigned during LRM configuration. DD is a pseudo point within the device.

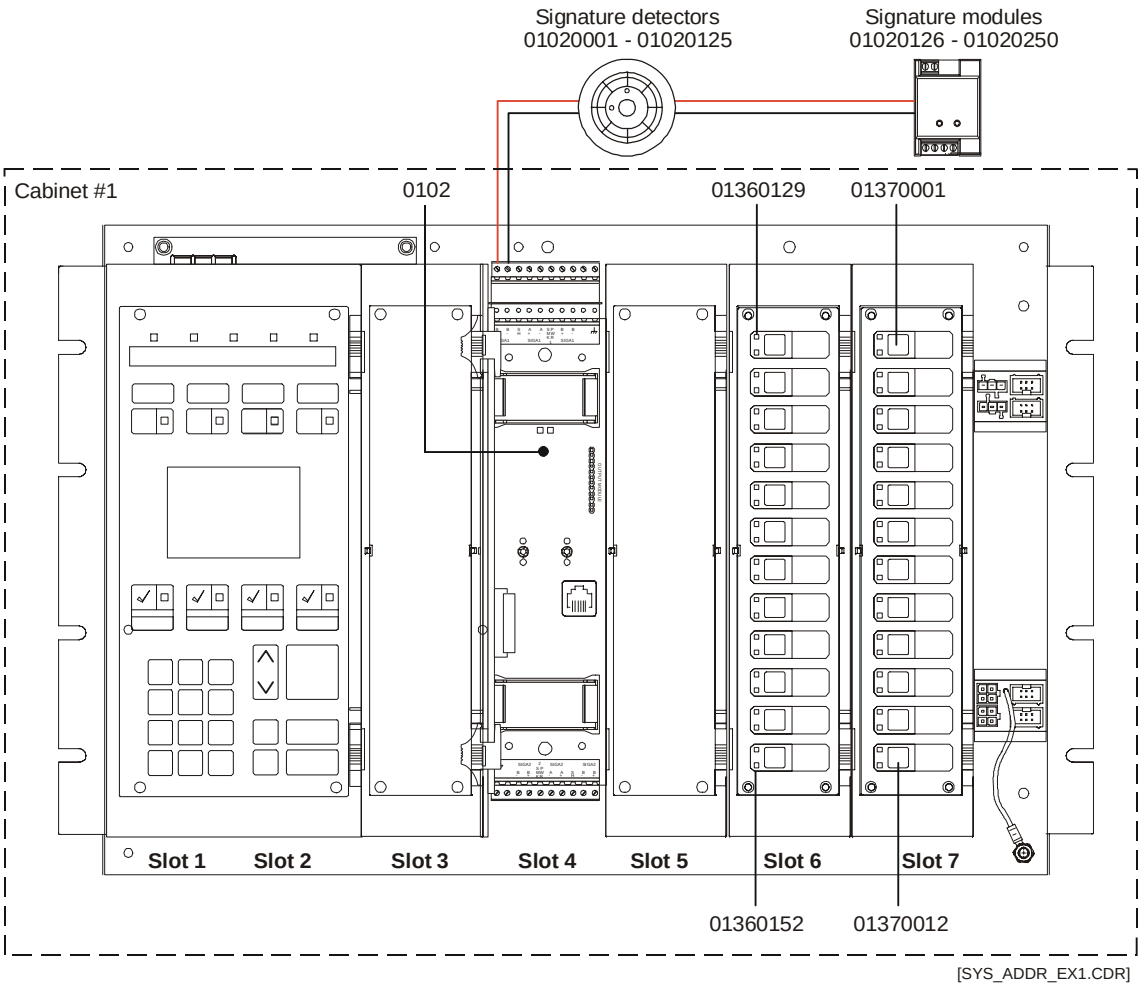

Figure A-1: Addressing example

LRM addresses

Figure A-2, Figure A-3, and Figure A-4 show the logical addresses that the system assigns to LRMs based on the panel configurations. Figure A 5 shows the effect of using a wide LCD module, such as the 3 LCDXL1 Main LCD Display.

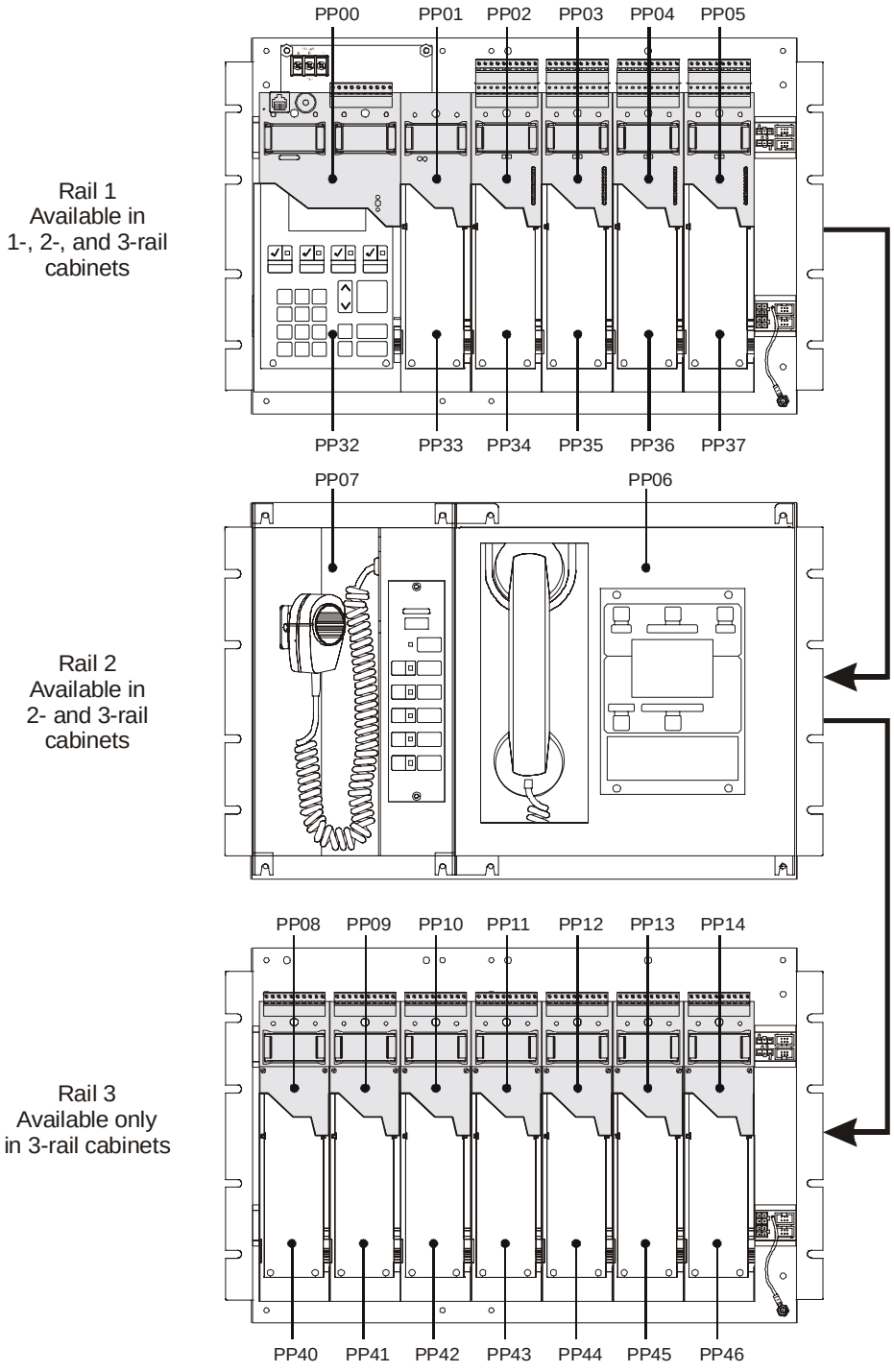

[LRM_ADDR_01.CDR]

Figure A-2: LRM addresses for 3-CHAS7, 3-ASU/FT, 3-CHAS7 configuration

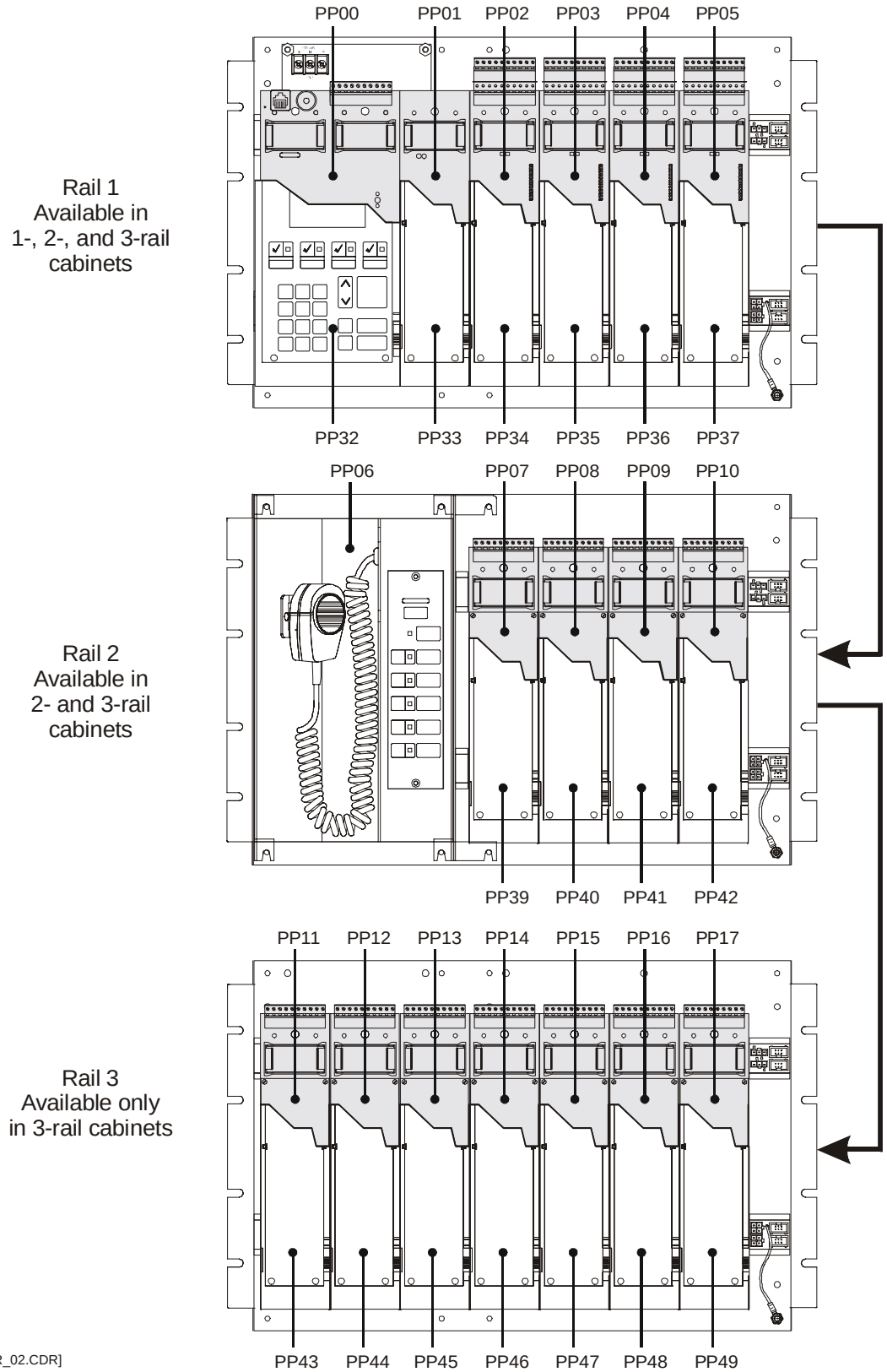

Figure A-3: LRM addresses for 3-CHAS7, 3-ASU/CHAS4, 3-CHAS7 configuration

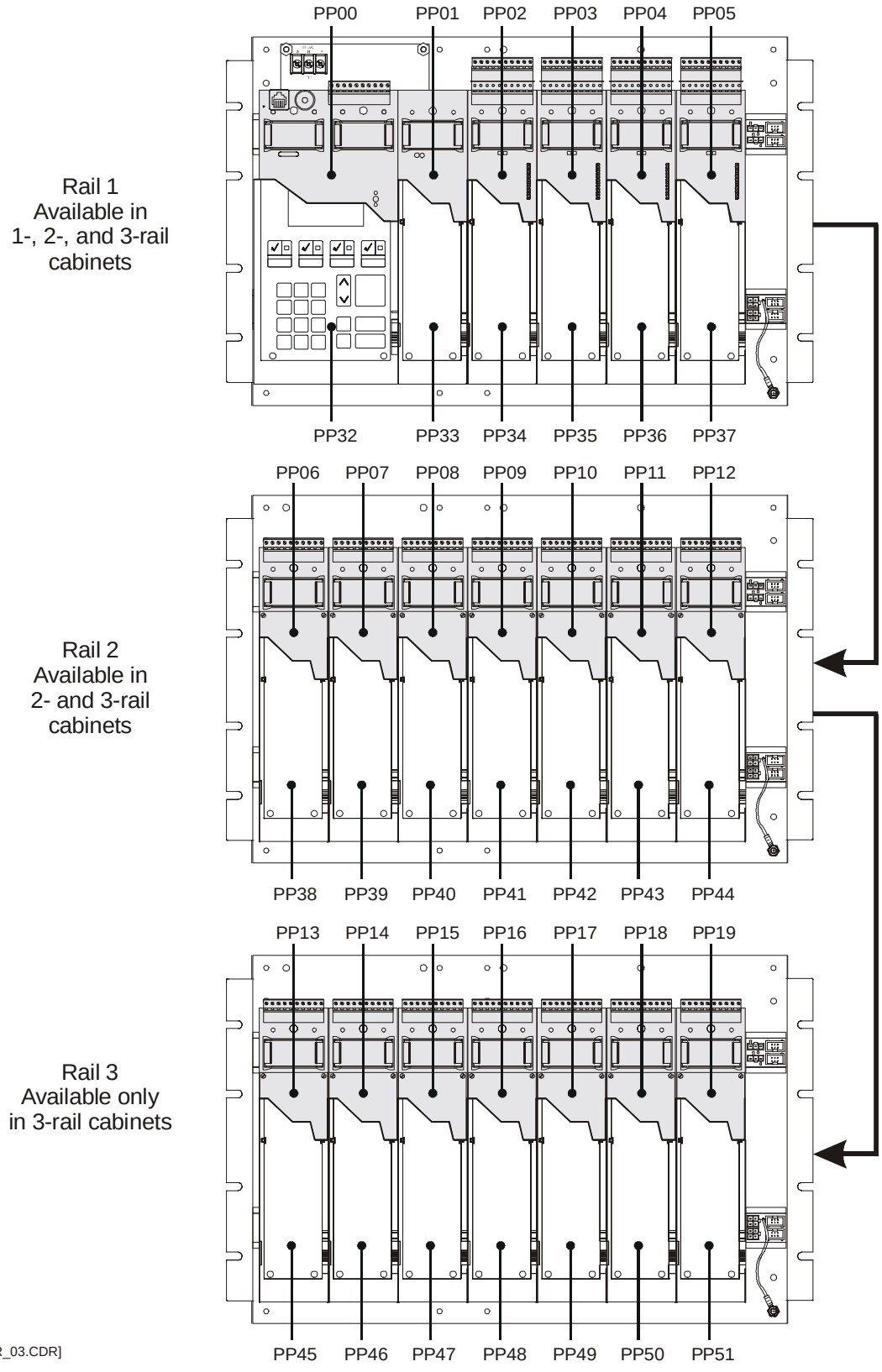

Figure A-4: LRM addresses for 3-CHAS7, 3-CHAS7, 3-CHAS7 configuration

Rail 1
Available in
1-, 2-, and 3-rail
cabinets

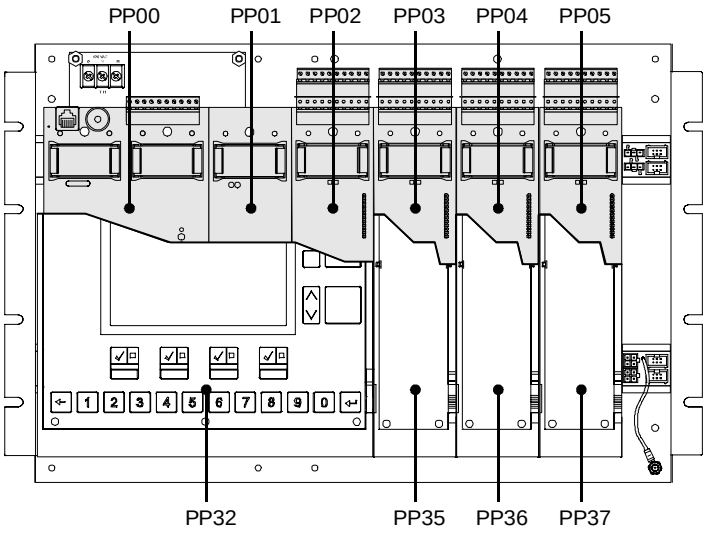

Figure A-5: LRM addresses when using a 3-LCDXL1 Main LCD Display

Control / display module addresses

Figure A-6 shows the device logical addresses that the system assigns the control/display modules.

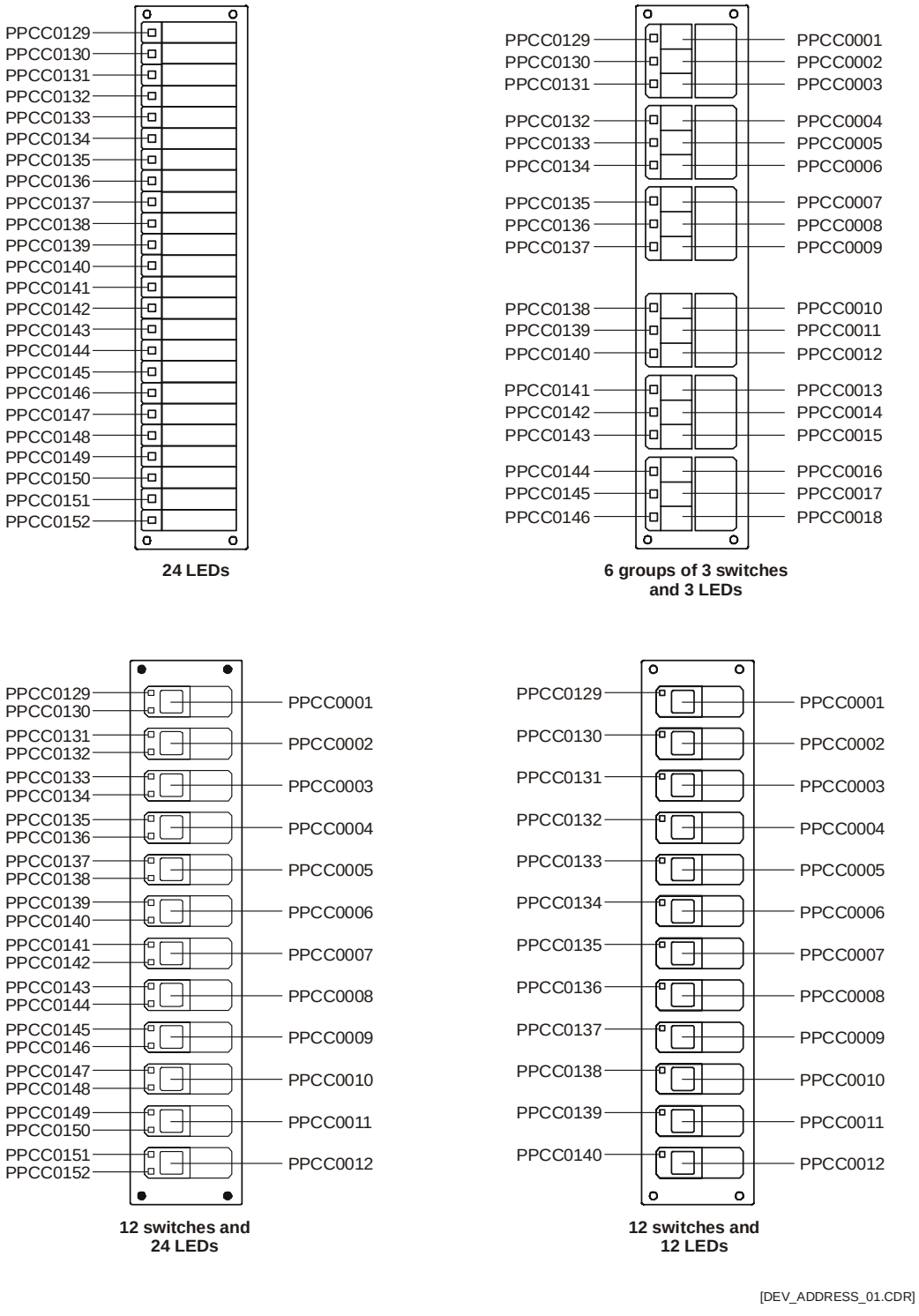

Figure A-6: Control/display module switch and LED device addresses

Device addresses

Figure A-7 shows the device logical addresses that the system assigns to various rail modules.

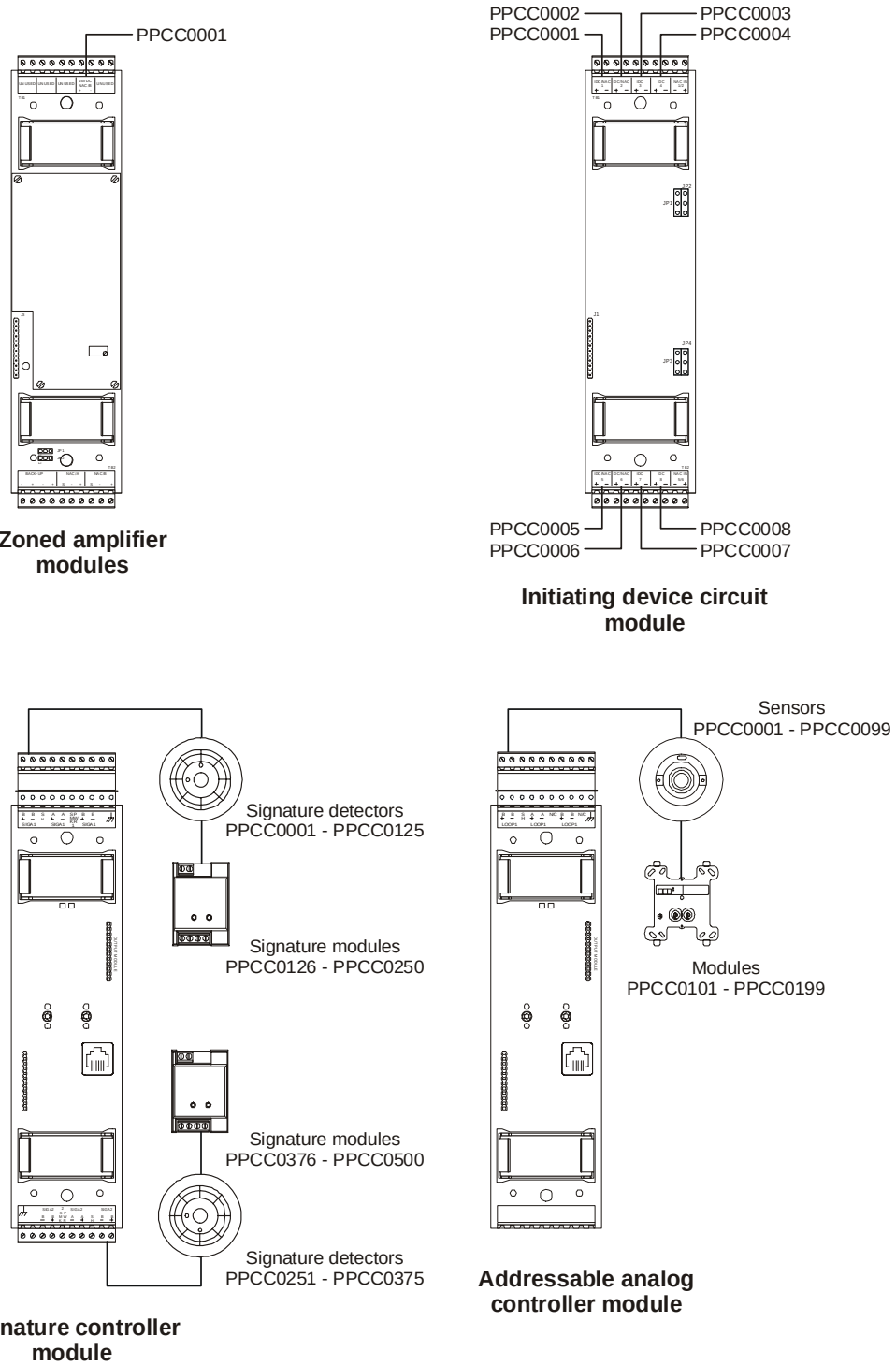

Figure A-7: Rail module device addresses

Appendix B

System calculations

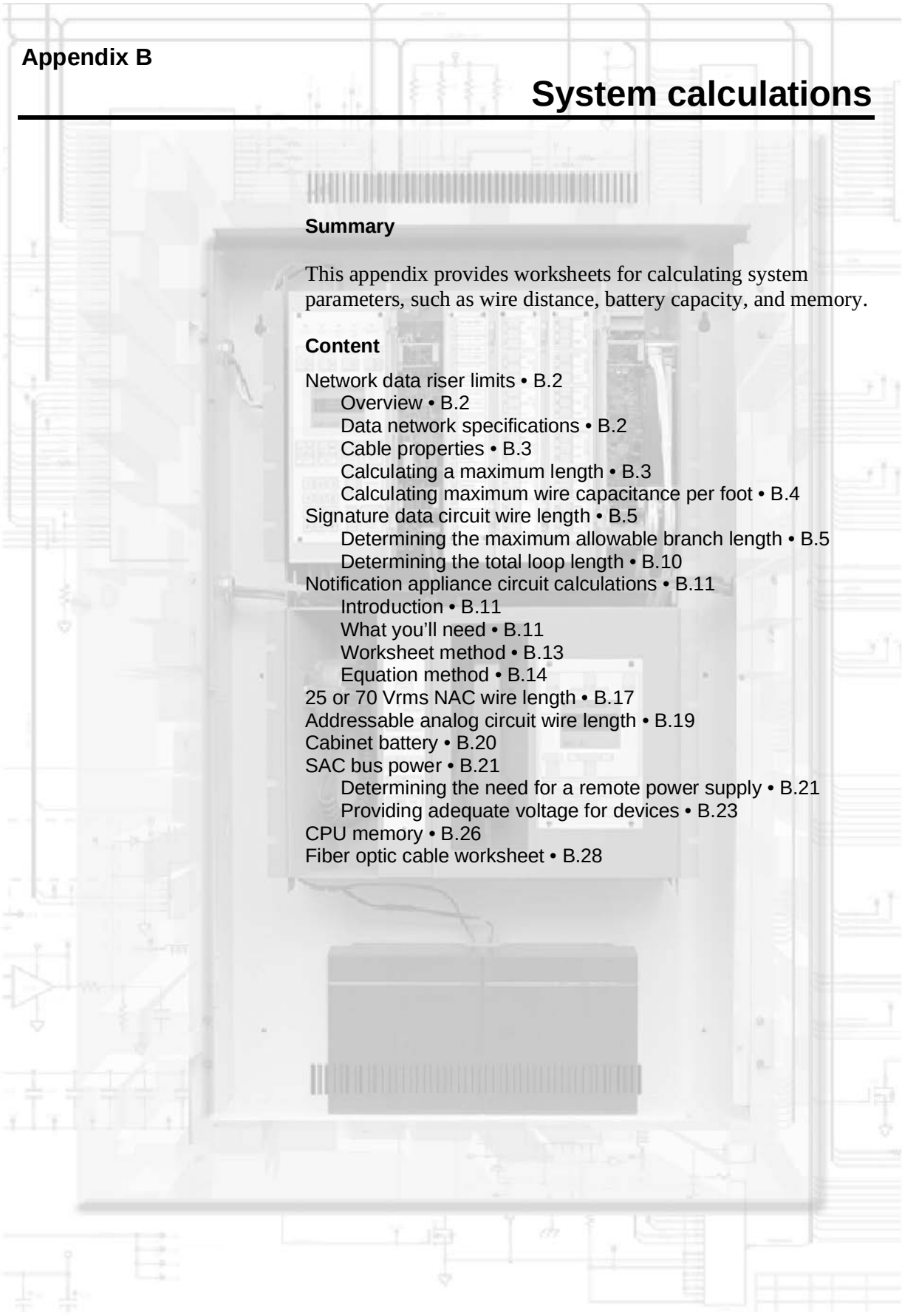

Summary

This appendix provides worksheets for calculating system parameters, such as wire distance, battery capacity, and memory.

Content

Network data riser limits • B.2
- Overview • B.2
- Data network specifications • B.2
- Cable properties • B.3
- Calculating a maximum length • B.3
- Calculating maximum wire capacitance per foot • B.4

Signature data circuit wire length • B.5
- Determining the maximum allowable branch length • B.5
- Determining the total loop length • B.10

Notification appliance circuit calculations • B.11
- Introduction • B.11
- What you'll need • B.11
- Worksheet method • B.13
- Equation method • B.14

25 or 70 Vrms NAC wire length • B.17
Addressable analog circuit wire length • B.19
Cabinet battery • B.20
SAC bus power • B.21
- Determining the need for a remote power supply • B.21
- Providing adequate voltage for devices • B.23

CPU memory • B.26
Fiber optic cable worksheet • B.28

Network data riser limits

Overview

Cumulative data network capacitance refers to the total capacitance of all copper wire used for the data riser. The cumulative capacitance of data networks must be within certain limits to permit stable network communications.

Audio networks are not affected by cumulative capacitance, due to the method of retransmitting data. The audio network retransmits data byte-by-byte, so the individual bit times of a byte are restored at each node in the network.

The data network retransmits data bit-by-bit. This method of retransmitting data restores the amplitude of a bit at each node, but any distortions in bit timing are passed through to the next node. Data network communication faults begin to occur at about 23% distortion of bit timing.

Cumulative data network capacitance induces bit timing distortion.

A fiber link in a data network electrically isolates two nodes, but distortions in bit timing are *not* restored by the fiber segment. Distortions in bit timing are passed through the fiber to the next node. The bit transition time of model 3-FIB fiber cards is fast enough to be neglected in determining the maximum wire length that can be used in the data network.

Data network specifications

Here are the maximum allowed values between any three nodes of a network.

- Resistance: 90 ohms (Ω)
- Capacitance: 0.3 microfarads (μF)
- Distance: 5,000 feet

The following table lists the maximum cumulative capacitance for the entire data network given various wire sizes and transmission rates. *Maximum cumulative capacitance* is the total capacitance of all installed copper wire used in the data network.

Maximum cumulative capacitance in microfarads

Wire size (AWG)	At 38.4 Kbaud	At 19.2 Kbaud
18	1.4	2.8
16	1.8	3.6
14	2.1	4.2

Cable properties

Data and audio networks in an EST3 system do *not* require the use of shielded cable, and networks designed with twisted-pair can be about twice as long as those designed with shielded cable.

The maximum length of a data network varies with the properties of the wire used. Wire manufacturers typically provide specifications for wire resistance and capacitance.

Resistance is generally specified in ohms per 1,000 feet, and must be doubled for 1,000 feet of a twisted-pair cable. Capacitance is specified in picofarads per foot (pF/ft).

The capacitance between conductors of a twisted-pair is commonly referred too as *conductor-conductor* or *mutual* capacitance. Shielded cable has an additional capacitance between each conductor and the shield. The capacitance of either conductor to shield is typically twice the value of mutual capacitance, and the highest value of capacitance must be used when calculating the maximum length of a data network.

The overall length of data networks designed with twisted-pair cable is about twice as long as data networks designed with shielded cable due to the additional capacitance resulting from the shield.

Calculating a maximum length

The maximum length of a data network can be calculated by dividing the maximum cumulative capacitance allowed by the highest capacitance rating of the selected cable.

For example, say you wanted to determine maximum length of a data network using 18 AWG cable that is rated at 25 pF per foot. The network will communicate at 38.4 Kbaud.

The maximum length equals the maximum cumulative capacitance divided by the capacitance per foot. In equation form:

ML = MCC / CPF

Where:

ML = Maximum length
MCC = Maximum cumulative capacitance
CPF = Capacitance per foot

In our example:

ML = 1.4 μF / 25 pF/ft
ML = 56,000 ft

Calculating maximum wire capacitance per foot

The capacitive property of twisted-pair cable varies and the cost of cable generally increases as the capacitance per foot decreases. Following is a sample calculation for determining the maximum capacitance per foot that a cable can have for a given network length.

The maximum capacitance per foot equals the maximum cumulative capacitance divided by the total network length. In equation form:

MCPF = MCC / TNL

Where:

MCC = Maximum cumulative capacitance, from the table given in this topic

TNL = •Total network length, the sum of the lengths of individual copper runs in the network

Here's an example. The total copper distance of a network is 26,000 feet. Calculate the maximum capacitance per foot that can be used for 18 AWG twisted-pair cable at 38.4K baud.

MCPF = MCC / TNL

MCPF = 1.4 μF / 26,000 ft

MCPF = 53.8 pF/ft

Signature data circuit wire length

Circuit resistance and capacitance determines the maximum length of a Signature data circuit. Circuit resistance affects the wire length of the longest circuit branch. Circuit capacitance affects the total amount of wire that can be used on the circuit.

Notes

The design of the Signature data circuit must not exceed either of the two measurements.

There are no restrictions placed on the wiring used for the Signature data circuit. Longer wire runs may be obtained using standard (non-twisted, non-shielded) wire pairs.

Determining the maximum allowable branch length

The maximum branch length is the wire distance measured from the Signature controller module to the last device on the longest circuit path as shown below.

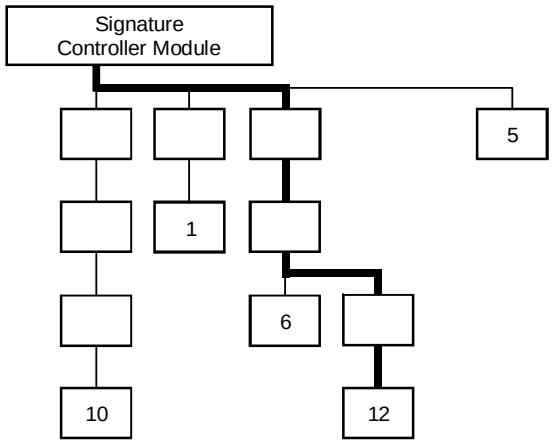

[WIRECALC2.CDR]

Several factors influence the maximum allowable branch length:

- Wire gauge and type
- Number of Signature detectors and modules installed on the branch
- Number of SIGA-UMs configured for 2-wire smoke detectors installed on the branch

Table B-1 through Table B-3 provide the maximum allowable branch length for any detector, module, SIGA-UM, and wire gauge combination. Using the wire distances specified in the tables ensures that the circuit does not exceed the maximum circuit resistance of the Signature data circuit.

Note: To calculate the wire distance with respect to circuit resistance, the tables assume that the circuit is end-loaded (all devices are clustered more towards the end of the circuit) and the circuit uses standard non-shielded wire.

To determine the maximum allowable length of a Signature data circuit branch:

1. Identify the device located farthest from the Signature controller.
2. Determine the number of Signature detectors, modules, and SIGA-UMs configured for 2-wire smokes that lie on the same conductive path between the device identified in step 1 and the Signature controller.
3. Calculate the number of detector and module addresses. Some Signature modules require two addresses.
4. Determine the size of the wire used to construct the circuit.
5. Find the maximum allowable wire distance for the longest branch in the lookup tables as follows:

   If no SIGA-UMs are installed, use Table B-1.

   If 1 to 5 SIGA-UMs are installed, use Table B-2.

   If 6 to 10 SIGA-UMs are installed, use Table B-3.

Table B-1: Maximum branch length with 0 SIGA-UMs configured for 2-wire smokes

Signature detector addresses	Signature module addresses	Maximum allowable wire distance using non-twisted, non-shielded wire pairs					
		18 AWG		16 AWG		14 AWG	
		ft	m	ft	m	ft	m
1–25	0	7437	2267	11815	3601	18792	5728
26–50	0	7038	2145	11180	3408	17782	5420
51–75	0	6638	2023	10545	3214	16772	5112
76–100	0	6238	1901	9910	3021	15762	4804
101–125	0	5839	1780	9275	2827	14752	4497
0	1–25	7267	2215	11544	3519	18361	5597
1–25	1–25	6867	2093	10909	3325	17351	5289
26–50	1–25	6467	1971	10275	3132	16342	4981
51–75	1–25	6068	1849	9640	2938	15332	4673
76–100	1–25	5668	1728	9005	2745	14322	4365
101–125	1–25	5268	1606	8370	2551	13312	4057
0	26–50	6697	2041	10639	3243	16921	5157
1–25	26–50	6297	1919	10004	3049	15911	4850
26–50	26–50	5897	1798	9369	2856	14901	4542
51–75	26–50	5498	1676	8734	2662	13891	4234
76–100	26–50	5098	1554	8099	2469	12881	3926
101–125	26–50	4698	1432	7464	2275	11871	3618
0	51–75	5906	1800	9383	2860	14923	4549
1–25	51–75	5250	1600	8340	2542	13265	4043
26–50	51–75	4633	1412	7360	2243	11707	3568
51–75	51–75	4051	1235	6435	1961	10235	3120
76–100	51–75	3498	1066	5558	1694	8839	2694
101–125	51–75	2973	906	4723	1440	7512	2290
0	76–100	3931	1198	6245	1903	9932	3027
1–25	76–100	3404	1037	5407	1648	8601	2621
26–50	76–100	2899	883	4605	1404	7324	2232
51–75	76–100	2413	735	3833	1168	6096	1858
76–100	76–100	1945	593	3089	942	4913	1498
101–125	76–100	1493	455	2371	723	3771	1149
0	101–125	2631	802	4180	1274	6649	2027
1–25	101–125	2165	660	3439	1048	5470	1667
26–50	101–125	1713	522	2721	829	4328	1319
51–75	101–125	1274	388	2023	617	3218	981
76–100	101–125	847	258	1345	410	2140	652
101–125	101–125	431	131	685	209	1089	332

Table B-2: Maximum branch length with 1 to 5 SIGA-UMs configured for 2-wire smokes

Signature detector addresses	Signature module addresses	Maximum allowable wire distance using non-twisted, non-shielded wire pairs					
		18 AWG		16 AWG		14 AWG	
		ft	m	ft	m	ft	m
1–25	0	6778	2066	10768	3282	17126	5220
26–50	0	6131	1869	9741	2969	15492	4722
51–75	0	5501	1677	8739	2664	13899	4236
76–100	0	4885	1489	7760	2365	12342	3762
101–125	0	4282	1305	6802	2073	10819	3298
0	1–25	5353	1632	8504	2592	13525	4122
1–25	1–25	4720	1439	7498	2286	11926	3635
26–50	1–25	4100	1250	6513	1985	10359	3157
51–75	1–25	3491	1064	5546	1691	8821	2689
76–100	1–25	2893	882	4597	1401	7311	2228
101–125	1–25	2306	703	3663	1116	5826	1776
0	26–50	3776	1151	5999	1829	9542	2908
1–25	26–50	3153	961	5009	1527	7966	2428
26–50	26–50	2539	774	4034	1230	6416	1956
51–75	26–50	1935	590	3075	937	4890	1491
76–100	26–50	1340	409	2130	649	3387	1032
101–125	26–50	754	230	1197	365	1905	581
0	51–75	2491	759	3957	1206	6293	1918
1–25	51–75	1868	569	2967	904	4720	1439
26–50	51–75	1254	382	1992	607	3168	966
51–75	51–75	648	198	1030	314	1638	499
76–100	51–75	50	15	80	24	126	39
101–125	51–75						
0	76–100	1386	422	2201	671	3501	1067
1–25	76–100	760	232	1208	368	1921	586
26–50	76–100	143	44	227	69	361	110
51–75	76–100						
76–100	76–100						
101–125	76–100						
0	101–125						
1–25	101–125						
26–50	101–125						
51–75	101–125						
76–100	101–125						
101–125	101–125						

Table B-3: Maximum branch length with 6 to 9 SIGA-UMs configured for 2-wire smokes

Signature detector addresses	Signature module addresses	Maximum allowable wire distance using non-twisted, non-shielded wire pairs					
		18 AWG		16 AWG		14 AWG	
		ft	m	ft	m	ft	m
1–25	0	5045	1538	8015	2443	12748	3886
26–50	0	4494	1370	7139	2176	11355	3461
51–75	0	3950	1204	6275	1913	9981	3042
76–100	0	3414	1040	5423	1653	8625	2629
101–125	0	2884	879	4581	1396	7286	2221
0	1–25	4106	1252	6523	1988	10375	3162
1–25	1–25	3542	1080	5627	1715	8950	2728
26–50	1–25	2985	910	4742	1445	7542	2299
51–75	1–25	2435	742	3868	1179	6152	1875
76–100	1–25	1891	576	3004	916	4778	1456
101–125	1–25	1353	412	2150	655	3419	1042
0	26–50	2869	874	4557	1389	7248	2209
1–25	26–50	2296	700	3648	1112	5802	1768
26–50	26–50	1730	527	2749	838	4372	1332
51–75	26–50	1170	357	1859	567	2957	901
76–100	26–50	617	188	979	299	1558	475
101–125	26–50	68	21	108	33	172	53
0	51–75	1796	547	2853	869	4537	1383
1–25	51–75	1214	370	1929	588	3067	935
26–50	51–75	638	195	1014	309	1613	492
51–75	51–75	69	21	109	33	173	53
76–100	51–75						
101–125	51–75						
0	76–100	833	254	1323	403	2105	642
1–25	76–100	242	74	385	117	613	187
26–50	76–100						
51–75	76–100						
76–100	76–100						
101–125	76–100						
0	101–125						
1–25	101–125						
26–50	101–125						
51–75	101–125						
76–100	101–125						
101–125	101–125						

Determining the total loop length

The total loop length is the sum of the lengths of all the wire segments installed in the data circuit.

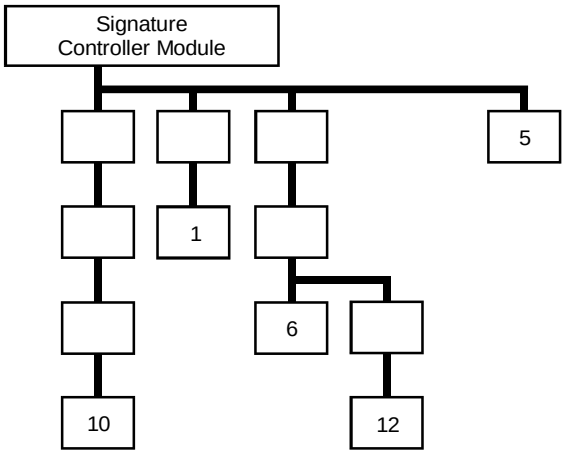

[WIRECALC3.CDR]

The total length of all the cable installed in the Signature data circuit cannot exceed the values listed below:

	Wire Size		
Wire type	**14 AWG**	**16 AWG**	**18 AWG**
Twisted pair	13,157 ft (4,010 m)	13,888 ft (4,233 m)	20,000 ft (6,096 m)
Twisted-shielded pair	5,952 ft (1,814 m)	6,098 ft (1,859 m)	8,621 ft (2,628 m)
Non-twisted, non-shielded pair	20,000 ft (6,096 m)	20,000 ft (6,096 m)	20,000 ft (6,096 m)

If the cable manufacturer's data indicates the capacitance per foot of the cable, the following method may be used to determine the maximum total loop length.

Note: In no case may the total loop length of a Signature data circuit exceed 20,000 feet (6,098 meters).

Lmax = 500,000 / Cpf

where:

- Lmax = maximum total cable length in feet
- Cpf = Cable capacitance in picofarads per foot

Note: A short circuit on a Signature data circuit can disable the entire circuit. In order to limit the effect of a single short circuit on the SDC, SIGA-IB Isolator Bases or SIGA-IM Isolator modules can be installed at strategic points in the circuit.

Notification appliance circuit calculations

Introduction

This topic shows you how to determine the maximum cable length of a notification appliance circuit (NAC) for a given number of appliances.

Two methods are presented: worksheet and equation. The worksheet method is simpler, but your installation must meet the criteria listed on the worksheet. If your installation does not meet these criteria, you need to use the equation method.

The methods given here determine cable lengths that work under all operating conditions. The calculations ensure that the required operating voltage and current will be supplied to all notification appliances. To do this, we assume these two worst-case conditions:

- The voltage at the NAC terminals is the minimum provided by the power supply
- The notification appliances are clustered at the end of the NAC cable

Other, more detailed methods that distribute the appliance load along the NAC cable may indicate that longer cable runs are possible.

What you'll need

Appliance and cable values

Whether you use the worksheet method or the equation method, you'll need to know:

- The minimum operating voltage required for the appliances
- The maximum operating current drawn by each appliance
- The resistance per unit length of the wire used (Ω/ft)

This information can be found on the appliance installation sheets, and on the cable specification sheet.

Power supply values

For either method, you'll need some fixed or calculated operating values for your specific power supply. The fixed values are:

- Maximum voltage = 27.4 V
- Rated voltage = 20.4 V
- Load factor = 0.37 V/A
- Power type = DC

The *maximum voltage* is the highest voltage measured at the NAC terminals. This value is not used in the calculations, but is given so you can ensure appliance compatibility.

The *rated voltage* is the theoretical operating minimum for the power supply, and is calculated as 85% of 24 volts.

The *load factor* is a measure of how the power supply voltage reacts when a load is applied. The load factor measures the voltage drop per ampere of current drawn by the load.

The *power type* reflects the type of power supplied to the NAC terminals at minimum voltage. The current draw of notification appliances can vary substantially with the type of power supplied: full-wave rectified (Vfwr) or direct current (Vdc). It is important to know the power type at minimum terminal voltage.

You'll need to calculate the following values relating to your power supply and to the NAC circuit current. These are:

- Minimum voltage
- Voltage drop

The *minimum voltage* is the lowest voltage measured at the NAC terminals when the power supply is under the maximum load for that circuit (i.e. for the appliances that constitute the NAC.)

The *voltage drop* is the difference between the minimum voltage and 16 V. This value is for use with the worksheet only.

Worksheet method

Use this worksheet to determine the maximum cable length of a notification appliance circuit for a given number of appliances.

Use this worksheet only if all the appliances are regulated. That is, they must have a minimum operating voltage of 16 V.

Worksheet 1: NAC cable length

		NAC1	NAC2	NAC3	NAC4	
Total operating current [1]						A
Load factor	×	0.37	0.37	0.37	0.37	V/A
Load voltage drop	=					V
Rated voltage		20.4	20.4	20.4	20.4	V
Load voltage drop	−					V
Minimum voltage	=					V
Regulated appliance voltage	−	16.0	16.0	16.0	16.0	V
Voltage drop [2]	=					V
Total operating current	÷					A
Maximum resistance	=					Ω
Wire resistance (Ω/ft) [3]	÷					
Maximum wire length	=					ft
	÷	2	2	2	2	
Maximum cable length	=					ft

[1] Total of the maximum operating currents for all appliances as specified for DC power. See the appliance installation sheets for operating currents.

[2] This voltage drop is valid for regulated notification appliances only. For unregulated appliances, see “Equation method,” later in this topic.

[3] Use the manufacturer’s published wire resistance expressed in ohms per foot. For typical values, see Table 4, later in this topic.

Equation method

Appliance operating voltage and current

Regulated notification appliances have an operating range from 16 V to 33 V. Use 16 V as the minimum appliance voltage when using regulated notification appliances.

When using unregulated notification appliances, refer to the installation sheets to determine the minimum appliance voltage required.

What if there are different types of appliances in the NAC, and each type has a different minimum operating voltage? In this case, use the *highest* minimum voltage required by any appliance.

The total current requirement for the appliances will be the sum of the individual maximum currents drawn by each appliance when using DC power. Use the maximum current for the appliance over the 16 V to 33 V range.

If all appliances draw the same maximum current, the total current is the maximum current multiplied by the number of appliances. If different appliance types have different maximum currents, the total current is the sum of the maximum current for each appliance type multiplied by the number of appliances of that type.

Wire resistance

Typical wire resistances are shown in the following table.

Table 4: Typical wire resistances

Wire gauge (AWG)	Resistance 1 strand uncoated copper		Resistance 7 strand uncoated copper	
	Ω per foot	Ω per meter	Ω per foot	Ω per meter
12	0.00193	0.00633	0.00198	0.00649
14	0.00307	0.01007	0.00314	0.01030
16	0.00489	0.01604	0.00499	0.01637
18	0.00777	0.02549	0.00795	0.02608

When performing these calculations, always refer to the actual cable supplier documentation and use the actual Ω/ft (or Ω/m) for the cable being used.

Calculating cable length

To calculate the maximum NAC cable length:

1. Calculate the total current (Itot) as the sum of the maximum operating currents for all the appliances.

   $Itot = \Sigma Ia$

   Where:
   Ia = appliance maximum current

   See the appliance installation sheets for Ia. Remember to use the maximum operating current specified for DC power.

2. Calculate the minimum voltage (Vm).

   $Vm = Vr - (Itot \times K)$

   Where:
   Vr = rated voltage
   Itot = total current (from above)
   K = load factor

   For the power supply, Vr is 20.4 V and K is 0.37 V/A.

3. Calculate the allowable voltage drop (Vd) between the power supply and the appliances.

   $Vd = Vm - Va$

   Where:
   Vm = minimum voltage (from above)
   Va = appliance minimum voltage

   For regulated notification appliances, Va is 16 V. For unregulated notification appliances, Va is the lowest operating voltage specified on the appliance installation sheet.

4. Calculate the maximum resistance (Rmax) the wire can have.

   $Rmax = Vd / Itot$

   Where:
   Vd = voltage drop
   Itot = total current

5. Calculate the maximum length of the cable (Lc), based on the maximum resistance allowed, the resistance of the wire, and the number of wires in the cable (two).

   $Lc = (Rmax / Rw) / 2$

   Where:
   Rmax = maximum resistance
   Rw = wire resistance factor

Example: You're using regulated notification appliances. Assume that the maximum operating current for each appliance is 100 mA for DC power, and that 20 appliances will be placed on the NAC. The cable is 12 AWG wire, and the manufacturer specifies a wire resistance factor of 0.002 Ω/ft.

Itot = ΣIa
= 20 × 0.1 A
= 2 A

Vm = Vr − (Itot × K)
= 20.4 V − (2 A × 0.37 V/A)
= 20.4 V − 0.74 V
= 19.66 V

Vd = Vm − Va
= 19.66 V − 16.0 V
= 3.66 V

Rmax = Vd / Itot
= 3.66 V / 2.0 A
= 1.83 Ω

Lc = (Rmax / Rw) / 2
= (1.83 Ω / 0.002 Ω/ft) / 2
= (915 ft) / 2
= 457.5 ft

So the maximum wire run for this NAC would be 457 ft (rounding down for safety).

25 or 70 Vrms NAC wire length

The maximum allowable wire length is the farthest distance that a pair of wires can extend from the amplifier to the last speaker on the notification appliance circuit without losing more than 0.5 dB of signal. Calculating the maximum allowable wire length using this method ensures that each speaker operates at its full potential.

Several factors influence the maximum allowable wire length:

- Wire size
- Output signal level of the amplifier driving the circuit
- Number of speakers installed on the circuit

To calculate the maximum allowable wire length for a 0.5 dB loss, use the following formula:

$$\text{Max length} = \frac{59.25 \text{ X Amplifier output}^2}{\text{Wire resistance X Circuit load}}$$

where:

- Amplifier output is the signal level in Vrms supplied by the amplifier driving the circuit
- Circuit load is the total watts required by the audio circuit
- Wire resistance is the resistance rating of the wire per 1000 ft pair, see Table B-5.

For example, the maximum allowable wire length for an audio circuit consisting of a 30 W, 25 Vrms amplifier driving thirty 1-watt speakers, using 18-guage wire would be 95 ft.

$$94.95 = \frac{59.25 \text{ X } 25^2}{13 \text{ X } 30}$$

Table B-5: Wire resistance ratings

Wire Size	Resistance per 1,000 ft pair (ohms)
18 AWG (0.75 sq mm)	13.0
16 AWG (1.0 sq mm)	8.0
14 AWG (1.50 sq mm)	5.2
12 AWG (2.5 sq mm)	3.2

Table B-6 and Table B-7 give the maximum allowable wire lengths for various wire sizes and loads. Use Table B-6 when designing circuits for amplifiers set for 25 Vrms output. Use

Table B-7 when designing circuits for amplifiers set for a 70 Vrms output.

Table B-6: Maximum allowable length at 25 Vrms, 0.5 dB loss

Wire size	Circuit load requirement											
	15 W		20 W		30 W		40 W		95 W		120 W	
	ft	m	ft	m	ft	m	ft	m	ft	m	ft	m
18 AWG (0.75 sq mm)	190	58	142	43	95	29	71	22	Over max current limit		Over max current limit	
16 AWG (1.0 sq mm)	309	94	231	70	154	47	116	35	48.7	15	39	12
14 AWG (1.5 sq mm)	475	145	356	109	237	72	178	54	75	23	59	18
12 AWG (2.5 sq mm)	772	235	579	176	386	118	289	88	121.8	37	96	29

Table B-7: Maximum allowable length at 70 Vrms, 0.5 dB loss

Wire size	Circuit load requirement											
	15 W		20 W		30 W		40 W		95 W		120 W	
	ft	m	ft	m	ft	m	ft	m	ft	m	ft	m
18 AWG (0.75 sq mm)	1489	454	1117	340	744	227	558	170	235	72	186	57
16 AWG (1.0 sq mm)	2420	738	1815	553	1210	369	907	276	382	116	302	92
14 AWG (1.5 sq mm)	3722	1134	2792	851	1861	567	1396	426	588.7	180	465	142
12 AWG (2.5 sq mm)	6049	1844	4537	1383	3024	922	2268	691	955	291	756	230

Addressable analog circuit wire length

Table B-8 lists the maximum wire distances allowed for Addressable Analog circuits.

Notes

Maximum wire resistance cannot exceed 50 ohms.

Maximum wire capacitance cannot exceed 0.05 microfarads.

Table B-8: Maximum allowable wire distance for Addressable Analog circuits

Wire gauge	Max loop Capacitance	Twisted, non-shielded ft	Twisted, non-shielded m	Twisted, shielded ft	Twisted, shielded m	Non-twisted, non-shielded ft	Non-twisted, non-shielded m
18	0.01 µF	4000	1219	1724	525	5000	1524
	0.02 µF	8000	2438	3448	1051	10000	3048
	0.03 µF	12000	3658	5172	1576	15000	4572
	0.04 µF	16000	4877	6896	2102	20000	6096
	0.05 µF	20000	6096	8620	2627	25000	7620
16	0.01 µF	2777	846	1219	372	5000	1524
	0.02 µF	5555	1693	2439	743	10000	3048
	0.03 µF	8333	2540	3658	1115	15000	4572
	0.04 µF	11111	3387	4878	1487	20000	6096
	0.05 µF	13888	4233	6097	1858	25000	7620
14	0.01 µF	2631	802	1190	363	5000	1524
	0.02 µF	5263	1604	2380	725	10000	3048
	0.03 µF	7894	2406	3571	1088	15000	4572
	0.04 µF	10526	3208	4761	1451	20000	6096
	0.05 µF	13157	4010	5952	1814	25000	7620

Cabinet battery

Use the following method to calculate the minimum ampere-hour capacity of a battery required in order to operate a panel in the absence of AC power. Battery calculations must be performed separately for each cabinet in the system.

Determine the total amount of current in milliamps required by all of the components that derive power from the battery while the panel is in standby mode. Multiply the total amount of standby current by the number of hours that the panel is required to operate in standby mode while on battery power.

Determine the total amount of current in milliamps required by all of the components that derive power from the battery while the panel is in alarm mode. Multiply the total amount of alarm current by the number of minutes that the panel is required to operate in alarm mode while on battery power. Divide the result by 60 to convert minutes to hours.

Add the total amount of standby current and the total amount of alarm current then divide the result by 1000 to convert to ampere-hours. Multiply this number by 1.2 to add a 20% safety factor to the calculations.

EST3 is UL Listed for battery operation durations as follows:

- Standby: 60 hours max.
- Alarm: 30 minutes max.

SAC bus power

This topic provides information to help you determine whether:

A power supply must be added to the SAC bus

Adequate voltage will be available to CRCs and KPDISPs on the SAC bus

The standby battery in each CRC is properly sized

Determining the need for a remote power supply

The need for additional power is dictated by the current drawn by the devices on the SAC bus. Each 3-PPS/M can supply a total of 7 A through two 3.5 A outputs. Each SAC line can therefore draw a maximum of 3.5 A. This consists of the current drawn by the CRCs and KPDISPs plus any readers, strikes, or maglocks.

If the load on the 3-PPS/M supply is greater than 3.5 A, you'll need to split the devices over two SAC busses, or add a remote power supply.

To determine the total load on the 3-PPS/M:

1. Complete Form A (below) to calculate the system alarm and standby load current.
2. Total the columns to determine the Total Alarm Load and Total Amp Hours. These two totals will be used in later calculations.
3. If the Total Alarm Load is greater than 3.5 A, the devices must be divided between two SAC busses, each with a separate supply—OR—a remote power supply must be installed.

Form A: 3-SAC alarm and standby load

Device	Qty	Alarm current (mA)	Total alarm current (mA)	Standby current (mA)	Total standby current (mA)	Standby time (Hours)	Amp hours (mAH)
KPDISP		100		35			
CRC		950		940			
CR-5355		72		70			
CR-5365		31		25			
CR-5395		24		20			
CR-6005		20		20			
Reader sounder		8		0			
CRCSND		8		0			
Strike rating							
100 mA @ 12 V		33		0			
150 mA @ 12 V		40		0			
200 mA @ 12 V		42		0			
250 mA @ 12 V		47		0			
300 mA @ 12 V		51		0			
35 mA @ 12 V		55		0			
400 mA @ 12 V		58		0			
450 mA @ 12 V		63		0			
500 mA @ 12 V		65		0			
Maglock rating							
100 mA @ 12 V		80		80			
150 mA @ 12 V		126		126			
200 mA @ 12 V		156		156			
250 mA @ 12 V		187		187			
300 mA @ 12 V		233		233			
350 mA @ 12 V		283		283			
400 mA @ 12 V		376		376			
450 mA @ 12 V		436		436			
500 mA @ 12 V		470		470			
Total alarm load (must be < 3.5 A)				Total amp hours (Battery)			

Note: Standby time = length of time that the device will draw standby current from battery. There is no minimum standby time for access control.

Providing adequate voltage for devices

To determine whether each CRC and KPDISP will have adequate input voltage, calculate the voltage drops along the SAC bus. Voltage drops can be estimated or actual.

Estimated voltage drop

To estimate the voltage drop use Table B-9 and Table B-10, which show the maximum wire length for a given number of doors at a given current load. The tables assume even spacing between the doors and an equal load at each door.

1. First, determine the load per door by adding the alarm currents of the CRC, door lock, card reader, and sounder.
2. Determine the number of doors you need to secure. Find the number of doors Table B-9 then search across that row for the column with the current you calculated in step 1.
3. The intersection gives the maximum distance from the 3-PPS/M or remote power supply to the last door.
4. If the distance to the last door in your installation is less than this distance no further calculations are needed.
5. If the distance to the last door in you installation is greater than this distance check Table B-10 using steps 1 through 4.
6. If changing the gauge of the wire does not work, you must run a second power line, or divide the SAC bus and add a remote power supply. In either case, recheck your estimates.

For example: You are putting a CRC, a strike rated at 250 mA @ 12 Vdc, a CR-5395 and a CRCSND at 8 doors. The furthest door is 500 feet from the control.

Using step 1 above, you determine that the total alarm current for this door is 149 mA. In Table B-9 (for 16 AWG), find 8 in the Doors column, go across this row to the 150 mA column. The intersection shows a maximum length of 584 feet. Since the distance from the control panel to the last door is less than 584 feet, no further calculations are needed.

Actual voltage drop

To calculate the actual voltage drop based on the actual load for each device and the actual distance between each device, follow these steps:

1. Start the EST3 System Builder and select the 16 AWG check box.
2. Enter the actual alarm load for the first device and the distance from the control panel to that device. The system will calculate the voltage drop and indicate whether it is OK to continue.

3. Continue by adding the actual alarm load and the distance from the previous device for each device on the SAC bus.
4. If you successfully enter all devices with no error messages, no further calculations are required. The panel supply will be adequate and each device will receive sufficient voltage.
5. If an error message occurs, you have the following options:

   Repeat the process using 14 AWG in step 1
   Run a second power supply line
   Divide the SAC bus and add a remote power supply

SAC bus wire length tables

Table B-9: SAC bus wire length for number of doors vs. current loads using 16 AWG wire

	Load (mA)												
Doors	**70**	**100**	**150**	**200**	**250**	**300**	**350**	**400**	**450**	**500**	**550**	**600**	**650**
1	4000	4000	2650	2000	1600	1300	1140	1000	885	800	720	665	616
2	3800	2660	1776	1300	1060	880	760	666	594	532	484	444	410
3	2850	1950	1320	990	780	660	570	498	444	399	363	333	306
4	2240	1600	1040	800	624	520	452	400	355	320	288	266	244
5	1875	1350	885	650	525	435	375	333	296	266	242	222	205
6	1620	1140	756	558	450	378	324	286	254	228	207	190	X
7	1400	980	665	497	392	329	285	250	222	199	X	X	X
8	1240	880	584	440	352	288	253	222	197	X	X	X	X
9	1125	810	522	396	315	261	228	200	X	X	X	X	X
10	1030	730	480	360	290	240	207	X	X	X	X	X	X
11	946	660	440	330	264	220	X	X	X	X	X	X	X
12	876	600	408	300	240	X	X	X	X	X	X	X	X
13	806	559	377	273	X	X	X	X	X	X	X	X	X
14	756	518	350	X	X	X	X	X	X	X	X	X	X
15	705	495	330	X	X	X	X	X	X	X	X	X	X
16	672	464	304	X	X	X	X	X	X	X	X	X	X
17	629	442	X	X	X	X	X	X	X	X	X	X	X
18	576	414	X	X	X	X	X	X	X	X	X	X	X
19	570	399	X	X	X	X	X	X	X	X	X	X	X
20	540	380	X	X	X	X	X	X	X	X	X	X	X

Note: All distance measurements given in feet. X means that the 3-PPS/M will not support these devices at any distance.

Table B-10: SAC bus wire length for number of doors vs. current loads using 14 AWG wire

	Load (mA)												
Doors	**70**	**100**	**150**	**200**	**250**	**300**	**350**	**400**	**450**	**500**	**550**	**600**	**650**
1	4000	4000	4000	3000	2400	2000	1750	1500	1360	1200	1100	1000	940
2	4000	4000	2700	2000	1600	1360	1160	1000	900	800	740	680	620
3	4000	3000	2040	1500	1200	1020	870	750	660	600	555	510	471
4	3480	2400	1600	1200	960	800	700	600	544	480	436	400	376
5	2900	2000	1365	1000	800	675	575	500	455	405	365	335	315
6	2460	1710	1140	870	690	582	492	438	390	348	312	X	X
7	2170	1505	1015	756	602	511	434	378	336	301	X	X	X
8	1920	1360	904	680	544	448	384	336	X	X	X	X	X
9	1710	1215	810	612	477	405	351	X	X	X	X	X	X
10	1550	1100	740	550	440	370	310	X	X	X	X	X	X
11	1430	1012	682	506	407	341	X	X	X	X	X	X	X
12	1344	936	624	468	372	X	X	X	X	X	X	X	X
13	1248	858	585	429	351	X	X	X	X	X	X	X	X
14	1162	812	532	406	322	X	X	X	X	X	X	X	X
15	1095	750	510	375	X	X	X	X	X	X	X	X	X
16	1024	720	480	352	X	X	X	X	X	X	X	X	X
17	969	680	442	340	X	X	X	X	X	X	X	X	X
18	918	630	414	X	X	X	X	X	X	X	X	X	X
19	874	608	399	X	X	X	X	X	X	X	X	X	X
20	820	580	380	X	X	X	X	X	X	X	X	X	X

Note: All distance measurements given in feet. X means that the 3-PPS/M will not support these devices at any distance.

CPU memory

Use the CPU memory calculation worksheet, Table B-11, to determine if a CPU requires additional memory. Each line in the worksheet is a system variable and is referenced by a line identification (ID) letter. The line IDs also appear in the formula column. The result of solving a formula is then placed in the "Results" column.

1. Enter the values for each variable in the "#" column on the same line.
2. Replace the variables in the formula by the value entered in the "#" column having the same letter as the formula.
3. Calculate the formula and put the results in the "Results" column.
4. Determine the memory size required as indicated at the bottom of the worksheet.

Note: The Systems Definition Utility will prevent you from downloading if the compiled project database exceeds the amount of memory on the CPU.

Table B-11: CPU memory calculation worksheet

Line	Variable	#	Formula	Result
A	Base usage	N/A	N/A	70,000
B	Label usage	N/A	48+(22 x (H+K+L+N+Q+S+T))	
C	Average number of characters in a message		Between 0 and 42	
D	Average number of characters in a rule		Between 4 and 10 per controlled output	
E	Number of routing definitions		2 + (E x 8)	
F	Number of rail modules other than Signature controller modules		F x 916	
G	Number of Signature controller modules		G x 1,776	
H	Number of zones		H x (22 + C + (J x 4) + (D x 2))	
J	Average number of devices in typical zone		N/A	
K	Number of Service groups		K x (14 x C + (2 x D))	
L	Number of AND groups		L x (22 + C + (D x 2) + (M x 4))	
M	Average number of devices in AND Group		N/A	
N	Number of Matrix groups		N x (22 + C + (2 x D) + (4 x P))	
P	Average number of devices in a Matrix Group		N/A	
S	Number of time controls		S x ((26 + C) + (2 x D) + 14))	
T	Number of Guard Patrols		T x (22 + C + (V x 4) + (U x 4))	
U	Number of Guard Patrol routes		N/A	
V	Number of Guard Patrol stations		N/A	
W	Number of physical devices		W x (46 + C + (Y x 4) + (2 x D) + 8)	
Y	Average number of Logics per device		N/A	
Z	Sum of Results Lines A to Y		A+B+C+D+E+F+G+H+J+K+L+M+N+P+S+T+U+V+W+Y	

If result on line Z is less than 262,144, no additional memory is required.

If result on line Z is greater than 500,000 then enter the job in 3-SDU to determine the exact size requirement (size of CABxx.bin file).

If result on line Z is still greater than 500,000 reduce the number of points on the panel, for example, by splitting the panel into two panels.

Fiber optic cable worksheet

The fiber optic cable worksheet should be used to verify that the light attenuation factors do not exceed the fiber optic budget for any fiber optic cable segment.

Notes

The contractor installing the fiber optic cable provides items A, B, and D.

Fiber optic budget must be greater than the total link loss (F).

Table B-12: Fiber Optic Cable Worksheet

Link Name	A Cable loss per unit distance [ ] dB/Ft [ ] dB/Km [ ] dB/Mi	B Distance [ ] Feet [ ] Km [ ] Miles	C Cable Loss A x B	D Number of Splices	E Contingency Splices	F Total Link Loss (dB) C+2[D+E]

Appendix C

Listing requirements

Summary

This appendix describes the requirements your EST3 system must meet in order to conform to UL or ULC listings.

Content

NFPA standards • C.2
Minimum requirements for UL security applications • C.3
- Local mercantile premises • C.3
- Police station connection using a 3-MODCOM or FireWorks • C.3
- Central station connection using FireWorks • C.4
- Central station with local bell timeout using a 3-MODCOM • C.5
- Central station using a 3-MODCOM • C.6
- Proprietary using 3-MODCOM or FireWorks • C.7
- Proprietary with standard line security • C.7
- Access control • C.8
- Holdup alarm • C.8

UL and ULC requirements • C.10

NFPA standards

EST3 meets the requirements of NFPA 72 for Local, Auxiliary, Remote Station, Proprietary, and Emergency Voice/Alarm fire systems.

Minimum requirements for UL security applications

Local mercantile premises

Standard: UL 609

Minimum hardware:

- 3-RCC7 Remote Closet Cabinet
- ATCK Attack Kit
- 3-TAMPRCC Cabinet Tamper Switch
- Central Processor Unit (CPU)
- 3-PPS/M Primary Power Supply
- Main LCD Display (LCD)
  —or—
  KPDISP Keypad Display
- 3-SAC Security Access Module
- Signature Controller Module
- Listed bell and bell housing: Ademco model AB12M Bell in Box
- 24DC12 12 Vdc Voltage Regulator with Security Bell Interface
- 3-IDC8/4 Traditional Zone I/O Module
- SIGA-MD Motion Detector
- SIGA-SEC2 Security Loop Module

Additional requirements:

- Standby power must provide 24 hours of standby with 15 minutes of alarm
- Maximum entry or exit delay must be 60 seconds
- Bell test must be included in system programming, if not a built-in feature of the software
- System must be programmed for a minimum of 15 minutes bell ring on alarm
- System must be programmed to indicate bell timeout with an LED
- System power supply, bell power supply (24DC12), and bell monitoring module (IDC8/4), must all be inside the ATCK Attack Kit protected cabinet

Police station connection using a 3-MODCOM or FireWorks

Standard: UL 365

Minimum hardware:

- 3-RCC7 Remote Closet Cabinet
- ATCK Attack Kit
- 3-TAMPRCC Cabinet Tamper Switch

- Central Processor Unit (CPU)
- 3-PPS/M Primary Power Supply
- Main LCD Display (LCD)
  —or—
  KPDISP Keypad Display
- 3-MODCOM Modem Communication Module
  —or—
  FireWorks
- 3-SAC Security Access Module
- Signature Controller Modules
- Listed bell and bell housing: Ademco model AB12M Bell in Box
- 24DC12 12 Vdc Voltage Regulator with Security Bell Interface
- 3-IDC8/4 Traditional Zone I/O Module
- SIGA-MD Motion Detector
- SIGA-SEC2 Security Loop Module

Additional requirements:

- Standby power must provide 24 hours of standby with 15 minutes of alarm
- Maximum entry or exit delay must be 60 seconds
- System must be programmed for a minimum of 15 minutes bell ring on alarm
- System must be programmed to indicate bell timeout with an LED
- System power supply, bell power supply (24DC12), and bell monitoring module (IDC8/4), must all be inside the ATCK Attack Kit protected cabinet
- Systems using a 3-MODCOM must be configured using two phone lines with line-cut detection
  —or—
  a single line with 24-hour test
- System must be programmed to provide closing confirmation (ring-back) at the arming station

Central station connection using FireWorks

Standard: UL 1610

Minimum hardware:

- 3-RCC7 Remote Closet Cabinet
- ATCK Attack Kit
- 3-TAMPRCC Cabinet Tamper Switch
- Central Processor Unit (CPU)
- 3-PPS/M Primary Power Supply
- Main LCD Display (LCD)

—or—
KPDISP Keypad Display
- FireWorks
- 3-SAC Security Access Module
- Signature Controller Modules
- SIGA-MD Motion Detector
- SIGA-SEC2 Security Loop Module

Additional requirements:

- System must be connected to a FireWorks workstation
- Standby power must provide 24 hours of standby with 15 minutes of alarm
- Maximum entry or exit delay must be 60 seconds
- System must be programmed to transmit opening and closing messages to the central monitoring station
- System must be programmed to provide closing confirmation (ring-back) at the arming station

Central station with local bell timeout using a 3-MODCOM

Standard: UL 1610

Minimum hardware:

- 3-RCC7 Remote Closet Cabinet
- ATCK Attack Kit
- 3-TAMPRCC Cabinet Tamper Switch
- Central Processor Unit (CPU)
- 3-PPS/M Primary Power Supply
- Main LCD Display (LCD)
  —or—
  KPDISP Keypad Display
- 3-MODCOM Modem Communication Module
- 3-SAC Security Access Module
- Signature Controller Module
- Listed bell and bell housing: Ademco model AB12M Bell in Box
- 24DC12 12 Vdc Voltage Regulator with Security Bell Interface
- 3-IDC8/4 Traditional Zone I/O Module
- SIGA-MD Motion Detector
- SIGA-SEC2 Security Loop Module

Additional requirements:

- Standby power must provide 24 hours of standby with 15 minutes of alarm
- Maximum entry or exit delay must be 60 seconds

- System must be programmed for a minimum of 15 minutes bell ring on alarm
- System must be programmed to indicate bell timeout with an LED
- System power supply, bell power supply (24DC12), and bell monitoring module (IDC8/4), must all be inside the ATCK Attack Kit protected cabinet
- System must be programmed to transmit opening and closing messages to the central monitoring station
- System must be configured using two phone lines with line-cut detection *or* a single line with 24-hour test
- System must be programmed to provide closing confirmation (ring-back) at the arming station

Central station using a 3-MODCOM

Standard: UL 1610

Minimum hardware:

- 3-RCC7 Remote Closet Cabinet
- ATCK Attack Kit
- 3-TAMPRCC Cabinet Tamper Switch
- Central Processor Unit (CPU)
- 3-PPS/M Primary Power Supply
- Main LCD Display (LCD)
  —or—
  KPDISP Keypad Display
- 3-MODCOM Modem Communication Module
- 3-SAC Security Access Module
- Signature Controller Modules
- SIGA-MD Motion Detector
- SIGA-SEC2 Security Loop Module

Additional requirements:

- Standby power must provide 24 hours of standby with 15 minutes of alarm
- Maximum entry or exit delay must be 60 seconds
- System must be programmed to transmit opening and closing messages to the central monitoring station
- System must be configured using two phone lines with line-cut detection
  —or—
  3-RCC7 a single line with 24-hour test
- System must be programmed to provide closing confirmation (ring-back) at the arming station

Proprietary using 3-MODCOM or FireWorks

Standard: UL 1076

Minimum hardware:

- 3-RCC7 Remote Closet Cabinet
- ATCK Attack Kit
- 3-TAMPRCC Cabinet Tamper Switch
- Central Processor Unit (CPU)
- 3-PPS/M Primary Power Supply
- Main LCD Display (LCD)
  —or—
  KPDISPKeypad Display
- 3-MODCOM Modem Communication Module
  —or—
  FireWorks
- 3-SAC Security Access Module
- Signature Controller Modules
- SIGA-MD Motion Detector
- SIGA-SEC2 Security Loop Module

Additional requirements:

- Standby power must provide 24 hours of standby with 15 minutes of alarm
- Maximum entry or exit delay must be 60 seconds
- Systems using a 3-MODCOM must be configured using two phone lines with line-cut detection
  —or—
  a single line with 24-hour test
- System must be programmed to provide closing confirmation (ring-back) at the arming station

Proprietary with standard line security

Standard: UL 1076

Minimum hardware:

- 3-CAB5, 3-CAB7, 3-CAB14, 3-CAB21, 3-RCC7, 3-RCC14, or 3-RCC21 with 3-CHAS7
- 3-TAMP, 3-TAMP5, or 3-TAMPRCC Cabinet Tamper Switch
- Central Processor Unit (CPU)
- 3-PPS/M Primary Power Supply
- 3-IDC8/4
  —or—
  3-SSDC(1) or 3-SDDC(1) with SIGA-CT1, SIGA-CT2, or SIGA-UM
- 3-RS485A, 3-RS485B, or 3-RS485R

Additional requirements:

- Standard line security is for stand-alone or networked EST3 systems only

Access control

Standard: UL 294

Minimum hardware:

- Central Processor Unit (CPU)
- 3-PPS/M Primary Power Supply
- Main LCD Display (LCD)
- 3-SAC Security Access Module
- CRC or CRCXM Card Reader Controller

Note: The CRC or CRCXM Card Reader Controller is fully functional and does not require a supportive PC for access decisions. Refer to the *CRC and CRCXM - Card Reader Controller Installation Sheet.*

Holdup alarm

Standard: UL 636

Minimum hardware:

- 3-RCC7 Remote Closet Cabinet
- ATCK Attack Kit
- 3-TAMPRCC Cabinet Tamper Switch
- Central Processor Unit (CPU)
- 3-PPS/M Primary Power Supply
- Main LCD Display (LCD)
- 3-MODCOM Modem Communication Module
  —or—
  FireWorks
- 3-IDC8/4 Traditional Zone I/O Module
  —or—
  Signature Controller Module
  —plus—
  SIGA-CT1, SIGA-CT2, or SIGA-UM module
- Listed compatible holdup IDC devices

Additional requirements:

- Standby power must provide 24 hours of standby with 15 minutes of alarm
- Maximum entry or exit delay must be 60 seconds
- Systems using a 3-MODCOM must be configured using two phone lines with line-cut detection
  —or—
  a single line with 24-hour test
- IDC8/4 devices must be configured as a security zone (in the SDU, Hard Zone Type = SECURITY)

- Signature modules must be configured as security devices (in 3-SDU, Device Type = Active Latching > Security)
- IDC8/4 devices must be configured so Routing Label and Alternate Routing Label are set to *No_Cabinets* (that is, the holdup event messages must not be displayed on any panel or other annunciator device)
- The system must be programmed so that all local outputs are suppressed.
- SIGA-CT1, SIGA-CT2, and SIGA-UM module loops used for holdup must be configured so Routing Label and Alternate Routing Label are set to *No_Cabinets* (that is, the holdup event messages must not be displayed on any panel or other annunciator device)
- The central monitoring station or FireWorks workstation must manned on a 24-hour basis

The following material is extracted from UL 636, Section 86. It applies to Holdup alarm applications.

86 Types of Remote Stations

86.1 A holdup alarm signal shall be transmitted to one of the following remote stations:

a) Direct to a constantly manned police department equipped for broadcasting radio calls to cruising squad cars or to a central station or residential monitoring station with facilities for relaying calls to a police department with such broadcasting facilities. The central station shall comply with the Standard for Central-Station Burglar Alarm Systems, UL 611, or the Standard for Central-Stations for Watchman, Fire Alarm and Supervisory Services, UL 827. The residential monitoring station shall comply with UL 611, UL 827, or both.

b) Two or more private stations in places of business constantly open during the day, located within 500 feet (152 m) of the protected premises and commanding all public approaches to the premises.

UL and ULC requirements

The following table describes the requirements your system must meet in order to conform to UL or ULC.

UL	ULC	Requirement
X		Partitioned security systems with central monitoring station reporting A partition that contains an EST3 panel equipped with a 3-MODCOM and local bell must be armed 24 hours a day, and have limited, high-level access. When FireWorks is used as the central monitoring station, the EST3 panel to which it connects must be in a partition that is armed 24 hours a day, and has limited, high-level access. Closing confirmation (ring back) must be provided at all arming stations. Use of multiple sounders or bells is acceptable.
X	X	Partitioned security systems using local bells A local bell must be positioned where it can be heard at each arming station. Use of multiple bells is acceptable. The system must be programmed to sound the bell for a minimum of 15 minutes on alarm. If the bell stops sounding after 15 minutes (timeout), the system must be programmed to light an LED to indicate bell timeout. When using a 24DC12 module to power the bell, that module must be installed in an EST3 cabinet that has a 3-TAMPRCC Cabinet Tamper Switch and an ATCK Attack Kit.
X	X	Partitioned security systems for certification All partitions in a certificated partitioned access control or security system must be under the control of a single company. In a certificated system, each separately owned business must have its own security system.
X	X	Security systems All security systems must specify a master arming station which receives all security event messages. Alternately, the system may be configured so that all messages are routed to all keypads. All cabinets in a system that includes security functionality must include tamper switches. On activation, all security points must generate an appropriate output device response. The SDU cannot guarantee correlation between security input devices and output devices. The system programmer must ensure that all points are accounted for. When the system includes a bell, you should create a general rule to sound the bell on activation of any security device.
X	X	Panel programming Fire and security functionality cannot be programmed into a control panel from a remote location. You must perform all panel programming on site.

Glossary

A device or zone	An alarm device or zone
ACDB	Access Control Database program. Software that lets end users create and maintain an access control database. The program communicates with the system either by direct RS-232 connection, or by telephone lines to a 3-MODCOM.
activate	To turn on or energize. Pertains to outputs (including logical outputs).
address	A number used to uniquely identify a device, output, panel, etc. within an EST3 system
alarm	The state of a fire alarm initiating device that has detected a smoke or fire condition. The state of a security device that has been triggered.
alarm silence timer	A panel option that automatically silences the notification appliance circuits (NACs) after a preprogrammed time limit after the last alarm
alarm silence or reset inhibit timer	A panel option that prevents anyone from silencing notification appliance circuits (NACs) or resetting the panel for a programmed period after the last alarm
AND statement	A system input that activates when ALL the input conditions as indicated in its AND statement list, are active
audible circuit	A notification appliance circuit that is turned OFF when the Alarm Silence switch is pressed.
change of state	Occurs whenever an input zone or device changes from a restored to an active condition, or from the active condition back to the restored condition
Class A IDC	A circuit, connected directly to initiating devices, that signals a trouble condition upon an open condition on the circuit. All devices wired on the circuit to continue to operate in the event of a single open. Similar to Style D & E integrity monitoring.
Class A NAC	A circuit, connected directly to notification appliances, that signals a trouble condition upon an open or shorted condition on the circuit. All appliances wired on the circuit to continue to operate in the event of a single open. Similar to Style Z integrity monitoring.
Class B IDC	A circuit, connected directly to initiating devices, that signals a trouble condition upon an open condition on the circuit. All devices wired on the circuit to continue to operate up to the location of a break. Similar to Styles A, B, C, & D integrity monitoring.

Class B NAC	A circuit, connected directly to notification appliances, that signals a trouble condition upon an open or shorted condition on the circuit. All appliances wired on the circuit to continue to operate up to the location of a break. Similar to Styles W, X, & Y integrity monitoring.
CMS	Central monitoring station
coder	A device that provides interruption of power to audible devices at a predetermined rate or sequence
command list	A predefined list of SDU commands. You can activate a command list from a rule, from another command list, or from an external command and control system. Users of the ACDB program can specify which command list is executed for an access control event. The RPM exports the command list names (labels) in the resource profile.
compile	To convert data entered during programming into a format used by the fire alarm control panel
CRC	Card Reader Controller
DACT	Digital alarm communicator transmitter. A system component which transmits digital alarm, supervisory, and trouble signals to a central monitoring station (CMS) over dial-up telephone lines. The 3-MODCOM is a DACT.
database	User-defined, permanently stored, system parameters containing system zone definitions, device types, responses, messages, etc.
device	Any Signature Series detector or module
device address	A number that uniquely identifies a detector or module on a Signature data circuit
dialer	See DACT
disable	Prevent an input, output, or system feature from functioning
download	To send a compiled project database from your PC to the system control panel.
EEPROM	Electrically erasable programmable read-only memory. Nonvolatile memory containing the system database.
enable	Permit an input, output, or system feature to function.
EPROM	Erasable programmable read-only memory. Nonvolatile memory containing the operating system. EPROM is erasable only by ultraviolet light.
external command port	An RS-232 connection which permits the CPU module to be connected to a remotely located control system.
fiber optic	Communication format that uses light signals carried on glass fibers to transmit and receive data
flash memory	Nonvolatile read-write memory
global domain	Features which operate in all network cabinets

group	A collection of Signature devices that is treated as a single entity for programming purposes. Groups can have messages and responses over and above the messages and responses of the individual group members.
group domain	Features that operate in a specific group of network cabinets
IDC	Initiating device circuit. An input circuit connected directly to any manual or automatic initiating device, whose normal operation results in an alarm or supervisory signal indication at the control panel. The electrical integrity of the circuit is monitored by the fire alarm system.
input	A signal generated by a field device and sent to the control panel for evaluation and responses as determined by the system database. Inputs to the system are detectors, modules, and switches.
KDC	Keypad Display Configuration program. Software that lets end users create and maintain a security database. The program communicates with the system via 3-MODCOM.
KPDISP	Keypad Display
label	A unique identifier for an object
listing	A printed version of all system configuration data contained in the panel
local domain	Features which operate only within the local cabinet
local system	A system which operates according to the provisions of NFPA 72, Chapter 3
logic functions	AND and OR statements
M device or zone	A monitor device or zone
march time	A 50% duty cycle, 120 beats per minute signal pattern
matrix	A correlation sheet that indicates the relationship between the activation of an input and the effect it will have upon all system outputs
modem	Short for modulator/demodulator. A communications device that enables a computer to transmit information over a standard telephone line. Sophisticated modems are also capable of such functions as automatic dialing, answering, and redialing in addition to transmitting and receiving. The 3-MODCOM includes a modem.
NAC	Notification appliance circuit. A circuit connected directly to notification appliances. The electrical integrity of the circuit is monitored by the fire alarm system.
nonsilenceable	A notification appliance circuit that remains active after initiating, independent of the panel's alarm silence features. Nonsilenceable NACs are typically used for visual devices.
object	Inputs, outputs, and controls which are used as the basis for creating system rules

output	A signal generated by the system, based upon responses defined in the system database, and sent to external field devices. Outputs are LEDs, and modules.
output priority	A system of hierarchy that allows or prevents setting or resetting outputs. Output priorities range from low to high.
personality code	A number code used to set the configuration and operation of a SIGA module. A personality code is either factory installed or must be downloaded into SIGA modules for proper operation.
power-limited	Wiring and equipment that conforms with, and is installed to, the National Electrical Code, Article 760, power-limited provisions
proprietary system	A system which operates according to the provisions of NFPA 72, Chapter 4-4
pseudo point	An input or output point that is not a physical device. Example: ground fault and communication fault notification.
PSNI	Positive, successive, non-interfering code
RAM	Random access memory. Volatile memory containing the system online or active status.
reset	An active condition or command used to force an output to its OFF condition. An output's OFF state may be in the restored condition (normal condition, not under the influence of a response) or the reset condition. An output reset state contains a priority level.
response	A list of outputs or functions that occur as a result of the change of state of an input.
restore	Refers to a condition of an input, where the input is not active. It also refers to the condition of an output where the output is not in its SET or RESET condition and does not have a priority value associated with it.
retard	The delay of water flow signals to prevent false alarms due to fluctuations in water pressure.
riser	An electrical path that contains power or signal that is used by multiple outputs, zones, or circuits.
RS-232	A serial communications format normally used for serial peripheral devices (i.e., printers) from a computer. RS-232 cables have a maximum length of 50 ft (15.2M).
RS-485	A serial differential communications format used to communicate between the panel and some remote annunciators.
rule	A logical relationship between objects defined in the network's object list. Rule format:[rule label] (input state) (input device type) 'input label' : Output command (output device type) (priority) 'output label' {comments};
S device or zone	Supervisory device or zone

SDU	EST3 System Definition Utility program. Software that lets programmers configure and program an EST3 integrated system.
sensitivity	The relative percent obscuration of a detector
sequence	A series of actions separated by time delays
service group	A collection of devices that are configured for testing as a group using the system test function
SIGA	An abbreviation for Signature A
Signature data circuit	The wiring which connects Signature Series devices to the fire alarm panel
silenceable	Notification appliance circuits that follow the action of the panel's alarm silence features. Silenceable NACs are used for audible devices only.
SPM	Strokes per minute
start action	An action that is activated upon power-up of the panel and remains active until manually reset
start sequence	A sequence that is begun upon power-up of the panel
supervisory circuit	An IDC input circuit used to monitor the status of critical fire protection equipment, e.g. sprinkler valves
supervisory open (trouble)	Condition generated when a supervisory zone is open, in ground fault, or when a Signature Series device is not responding to a poll
supervisory short	Condition generated when a supervisory zone or device is shorted.
System Definition Utility	A Windows-based program used to enter and modify information contained in the system
TAP protocol	Telocator Alphanumeric Protocol. A communication protocol that lets the EST3 system transmit text messages to suitably equipped and supported alphanumeric pagers, via the 3-MODCOMP.
telco	Telephone company
temporal pattern	A universal 3-pulse evacuation signal meeting the requirements of NFPA Standard 72, section A-2-4.10(a) and ULC 527
time control	An input activated by the time of day or day of the month
verification alarm	Upon receipt of an alarm by a smoke detector, verified detectors attempt to automatically reset. Receipt of a second alarm within the 60-second confirmation period after the automatic detector reset period is indicative of a verified alarm.
waterflow device	Devices or zones defined as waterflow devices are not permitted to silence their notification appliances while the alarm is active

zone	A group of Signature Series detectors and modules which has a unique zone number and acts as a single entity for programming purposes, whenever any component of the zone is activated

Index

3

3-AADC1 with IRC-3 • 5.41
3-MODCOM • 3.3, 3.32, 3.34
3-RS232 card • 3.34
3-SAC
  description • 3.3
  device capacity • 3.3

6

6 Types of Remote Stations • C.9

A

AC power and battery wiring • 5.42
AC power source application • 3.39
AC power supply
  elevator control application • 3.23
  remote controls application • 3.46
Access control • C.8
access control applications • 3.1
access control system diagram • 3.2
access events
  command lists in SDU • 3.15
access levels
  visitors • 3.31
ACDB
  3-MODCOM receiving function • 3.3
  computer location in muster • 3.32
  configuring CRC • 3.8
  CRCSND configuration • 3.4
  description • 3.7
  door timers • 3.9
  role in a security system • 3.9
  transmission methods • 3.7
ACDB operation
  common door access • 3.17
  delayed egress • 3.20
  emergency exit door • 3.25
  handicap access door • 3.27
  intermittent locks • 3.38
  multiple card readers • 3.31
  power for intermittent locks • 3.38
adding hardware • 8.6
additional card readers • 3.27
additional power supplies • 3.4, 3.8
Addressable analog
  module troubleshooting • 8.75
alarm
  sensitivity • 1.26
alert channel • 1.37
all call • 1.35
all call minus • 1.35
alternate alarm sensitivity • 1.27
alternate alarm verification • 1.27
alternate prealarm setting • 1.28
amplifier
  backup • 1.8
amplifier • 1.7
amplifier
  output wattage • 1.33
amplifier
  output voltage • 1.33
amplifier
  wiring considerations • 1.34
amplifier
  backup • 1.34
amplifier
  audio • 4.8
amplifier selection • 1.33
Amplifier Terminal Panel • 4.3, 4.6
  installation • 4.13
anti-passback
  muster application • 3.11
anti-passback application • 3.11
application descriptions
  AC power source • 3.39
  anti-passback • 3.11
  central monitoring station • 3.14
  common door access • 3.16
  continuous locks • 3.35
  DC power supply • 3.42
  delayed egress • 3.18
  elevator control • 3.21
  emergency exit door • 3.24
  handicap access door • 3.26
  intermittent locks • 3.37
  maglock peripherals • 3.28
  multiple card readers • 3.30
  muster • 3.32
  power for continuous locks • 3.35
  power for intermittent locks • 3.37
  power from a remote source • 3.42
  power from an AC source • 3.39
  remote controls • 3.45
  remote power source • 3.42
  remote power source application • 3.42
  two-person rule • 3.47
audio
  channels • 1.34
  signal priority • 1.10
  synchronization • 5.6
  zoning • 1.33
audio amplifiers • 8.21
audio source unit • 1.9
automatic door openers • 3.6, 3.26

B

badging in • 3.32
bar code card • 3.30
batteries
  compatibility list • 3.5
  CRC option • 3.5
  description • 3.5
  limitations of CRC battery • 3.41
battery calculations • B.20

booster power supply • 8.9
bypass time
  delayed egress application • 3.20
  emergency exit door application • 3.25

C

cabinet coverage • 1.29
cable properties • B.3
cables
  SAC bus • 3.3
calculating maximum wire capacitance per foot • B.4
capacitance of SAC bus • 3.3
card access equipment • 3.2
card readers
  additional • 3.27
  anti-passback application • 3.11
  definition • 3.6
  dual LED control • 3.31, 3.48
  handicap access door application • 3.26
  two-person rule application • 3.48
central monitoring station application • 3.14
central monitoring stations • 3.3
Central station connection using FireWorks • C.4
Central station with local bell timeout using a 3-MODCOM • C.5
Central station via 3-MODCOM • C.6
chain errors • 8.55
chassis
  19-inch rack installation • 5.22
circuit common • 3.8, 3.23, 3.44, 3.46
circuit modules
  removing or replacing • 8.4
command lists
  events with • 3.15
  multiple card readers application • 3.31
  muster application • 3.34
  remote controls application • 3.46
  two-person rule application • 3.49
common door access application • 3.16
communication fault • 8.64
compiler errors • 6.4
configuring CRC • 3.8
continuous locks • 3.35
continuous locks application • 3.35
CPU memory calculations • B.26
CRC
  battery • 3.5
  description • 3.4
  input circuits • 3.5
  jumpers • 3.8
  lock output • 3.7
  options • 3.4
  output circuits • 3.6
  power supply from cabinet • 3.8
  resetting • 3.18, 3.19, 3.20
CRCRL • 3.4
CRCSND
  delayed egress application • 3.18
  description • 3.4
  emergency exit door application • 3.24
  installation • 3.4
CRCXF • 3.5

D

data network specifications • B.2
DC power supply application • 3.42
delayed egress application • 3.18
delayed egress time • 3.18, 3.19
design considerations
  audio applications • 1.33
design considerations
  firefighter telephone • 1.42
detector cleaning • 7.10
device sharing • 3.17
device trouble • 8.59
device type
  PIR in maglock peripherals • 3.29
device type fault • 8.63
diagnostic tools
  addressable analog • 8.70
  Signature • 8.51
direct connect to panel • 3.7, 3.32
door ajar sounder • 3.4
door contact
  CRC input circuit • 3.5
  delayed egress application • 3.19, 3.20
  emergency exit door application • 3.24, 3.25
door holders • 3.6
door open timer • 3.9
downloading
  problems • 8.6
dual LEDs • 3.6, 3.31, 3.48
dummy loads • 3.23, 3.34

E

elevator control application • 3.21
emergency exit door application • 3.24
emergency exit sounder • 3.4
emergency exit sounder time • 3.20, 3.25
energized system precaution • 5.3
equipment
  basic access control system • 3.2
error messages • 8.53
ESD precaution • 5.3
evacuation (EVAC) channel • 1.37
external modem
  connecting for the remote diagnostics utility • 5.53

F

feature/function domain • 1.30
fiber optic cable worksheet • B.28
firefighter telephone • 1.15
floor access • 3.21

G

general channel • 1.37
ground fault • 8.64
ground fault detection • 3.8, 3.44, 3.46
ground faults • 8.78
  Signature data circuit • 8.39

H

handicap
  privileges • 3.26
  timers • 3.27
handicap access door application • 3.26
hardware
  adding • 8.6
  substitution • 8.5
hardware problems • 8.5

high and low card readers • 3.30
Holdup alarm • C.8

I

input circuits
  delayed egress application • 3.20
  description • 3.5
  dummy loads • 3.23
  elevator control application • 3.23
  emergency exit door application • 3.24, 3.25
intermittent locks • 3.37
internal fault • 8.63
IRC-3 upgrade • 5.41

J

jumper settings
  AC power source • 3.41
  continuous locks • 3.36
  DC power supply • 3.44
  intermittent locks • 3.38
  remote power supply • 3.44
jumpers • 3.8

K

keypads
  description • 3.6

L

LEDs
  dual LED control • 3.31, 3.48
length of SAC bus • 3.3
lobbies • 3.16
Local mercantile premises • C.3
lock circuit dummy loads
  elevator control application • 3.23
  muster station • 3.34
lock types
  intermittent locks • 3.38
locks
  CRC output • 3.7
  CRCRL and external power supply • 3.4
logged anti-passback • 3.11

M

maglock peripherals application • 3.28
maglocks
  code requirements • 3.28
  CRC output • 3.7
  delayed egress application • 3.19
magnetic stripe access cards • 3.6
maintenance philosophy • 8.3
manual audio zone selection • 1.38
mapping errors • 8.47, 8.52
message counters
  Signature • 8.57
messages • 1.39
  alarm format • 1.39
  alert format • 1.40
  automatic • 1.14
  default • 1.14
modem transmission • 3.7
motion detectors • 3.5
multiple card readers application • 3.30
multiple tenants • 3.16
muster
  3-RS232 card • 3.34
  partitions • 3.34
  report • 3.32
  timed anti-passback • 3.11
muster application • 3.32
muster station
  requirements • 3.32, 3.34

N

N.C. contacts • 3.6
N.O. contacts • 3.6
NAC circuit calculations • B.11
NAC synchronization • 5.6
network
  applications and design considerations • 1.29
  layout • 1.29
network data riser
  cable properties • B.3
  length • B.3
  limits • B.2
  specifications • B.2
  wire capacitance • B.4
NFPA 101
  delayed egress • 3.18
  emergency exit door • 3.24
NFPA standards • C.2
notification zones • 5.8

O

open fault • 8.64
output circuits • 3.6

P

page channel • 1.35
page to alert • 1.35
page to evac • 1.35
pager messages • 3.3
panel controller • 8.9
partitions
  muster application • 3.34
passive infrared motion detector • 3.28, 3.29
peripherals required for maglocks • 3.28
personality fault • 8.63
PIN schedules • 3.6
Police station connection • C.3
power
  elevator control application • 3.23
  transformer • 3.5
power for continuous locks application • 3.35
power for intermittent locks application • 3.37
power from a remote source application • 3.42
power from an AC source application • 3.39
power supplies
  AC power source • 3.41
  circuit common • 3.8, 3.23, 3.44, 3.46
  continuous locks application • 3.36
  DC power supply • 3.42, 3.44
  elevator control application • 3.23
  ground fault detection • 3.8
  intermittent locks application • 3.38
  jumper settings • 3.8
  panel • 3.8

power supplies (continued)
power from a remote source • 3.44
power from a remote source application • 3.42
power from an AC source application • 3.39
remote controls • 3.46
remote power source • 3.44
transformer • 3.8
transformer source • 3.41
power wiring • 5.42
power-up procedure • 6.3
prealarm
setting • 1.27
preventive maintenance
schedule • 7.3
primary power supply • 8.7
priority
audio channel • 1.34
problem classification • 8.3
Proprietary using 3-MODCOM or FireWorks • C.7
Proprietarywith standard line security • C.7
proximity cards • 3.6
pseudo point descriptions • 8.24

R

rack mounting • 5.22
racks
equipment • 4.3
reader terminal dummy loads • 3.34
recommended spares list • 8.4
record of completion • 6.24
remote controls application • 3.45
remote power source application • 3.42
remote power supply wiring diagram • 3.44
request to exit buttons • 3.5, 3.18, 3.20
requirements for UL security applications • C.3
resetting the CRC • 3.18, 3.25
resistance of SAC bus • 3.3
resource allocation • 3.17
resource profiles • 3.7, 3.17
response lists • 8.56
RPM • 3.7, 3.17

S

SAC bus
3-SAC module • 3.3
description • 3.3
elevator control application wiring • 3.23
EOL resistor • 3.34
wiring • 3.3
SAC bus power calculations • B.21
SDU
configuring CRC • 3.8
CRCSND programming • 3.4
role in a security system • 3.8
second card reader • 3.26
security devices • 3.5
selecting a page destination • 1.35
selective page • 1.35
sensitivity fault • 8.63
sharing devices • 3.17
short fault • 8.64
SIGA-AAxx • 8.21
Signature
detector troubleshooting • 8.60
diagnostic tools • 8.51
module troubleshooting • 8.49, 8.61
Signature (continued)
real time status • 8.65
trouble tables • 8.62
Signature controller module • 3.46
Signature data circuit
basic troubleshooting • 8.37
branch length • B.5
determining total length • B.10
ground faults • 8.39
operation • 8.35
wire length • B.5
Signature relays
elevator control application • 3.21
remote controls application • 3.46
smart cards • 3.6
static-sensitive handling • 8.3
strict anti-passback • 3.11
strikes
description • 3.7
strobe
synchronization • 5.6
substituting hardware • 8.5
substituting known good Signature series devices • 8.41
synchronization of NACs • 5.6
system description • 1.2

T

testing
control and emergency communications • 6.7
initial and reacceptance • 6.6
initiating devices • 6.21
notification appliances • 6.23
timed anti-passback • 3.11
transformers
AC power source application • 3.39
circuit common • 3.8
CRCXF CRC Transformer • 3.5
elevator control application • 3.23
remote controls application • 3.46
wiring diagram • 3.41
trouble and maintenance log • 7.14
trouble registers • 8.59
trouble tables
Signature • 8.62
troubleshooting
wiring problems • 8.77
two-person rule
dual LED control • 3.6
two-person rule application • 3.47

U

UL and ULC requirements • C.10
UL security application requirements • C.3
unexpected fault • 8.63
uninterruptible power supply • 5.48
Universal Riser Supervisory Module • 4.10
unlock timer • 3.9

V

visitor access level • 3.31
visitor and escort
dual LED control • 3.6
multiple card readers application • 3.30

W

Wiegand pin cards • 3.6
wire length calculations
    24 Vdc notification appliance circuits • B.11
    25 or 70 Vrms notification appliance circuits • B.17
    addressable analog data circuits • B.19
    network data riser • B.2, B.3
    notification appliance circuits • B.11
    Signature data circuits • B.5
wiring
    branch speaker circuit • 4.25
    card readers • 3.27
    circuit common • 3.8, 3.23, 3.44, 3.46
    DC power supplies • 3.44
    ground fault detection • 3.8, 3.44, 3.46
    remote power supplies • 3.44
    SAC bus • 3.3
    transformers • 3.41
wiring problems • 8.77

SIGA-REL Technical Reference Manual

P/N 387348 • REV 04 • REB 18JAN13

Copyright © 2013 UTC Fire & Security. All rights reserved.

This document may not be copied in whole or in part or otherwise reproduced without prior written consent from UTC Fire & Security, except where specifically permitted under US and international copyright law.

Document number: 387348-EN Revision: 04

Disclaimer The information in this document is subject to change without notice. UTC Fire & Security assumes no responsibility for inaccuracies or omissions and specifically disclaims any liabilities, losses, or risks, personal or otherwise, incurred as a consequence, directly or indirectly, of the use or application of any of the contents of this document. For the latest documentation, contact your local supplier or visit us online at www.edwardsutcfs.com.

This publication may contain examples of screen captures and reports used in daily operations. Examples may include fictitious names of individuals and companies. Any similarity to names and addresses of actual businesses or persons is entirely coincidental.

Trademarks and patents The SIGA-REL name and logo are trademarks of UTC Fire & Security.

Other trade names used in this document may be trademarks or registered trademarks of the manufacturers or vendors of the respective products.

Intended use Use this product only for the purpose it was designed for; refer to the data sheet and user documentation for details. For the latest product information, contact your local supplier or visit us online at www.edwardsutcfs.com.

FCC compliance This equipment has been tested and found to comply with the limits for a Class A digital device, pursuant to part 15 of the FCC Rules. These limits are designed to provide reasonable protection against harmful interference when the equipment is operated in a commercial environment. This equipment generates, uses, and can radiate radio frequency energy and, if not installed and used in accordance with the instruction manual, may cause harmful interference to radio communications.

You are cautioned that any changes or modifications not expressly approved by the party responsible for compliance could void the user's authority to operate the equipment.

European Union directives

The European directive “Waste Electrical and Electronic Equipment” (WEEE) aims to minimize the impact of electrical and electronic equipment waste on the environment and human health. For proper treatment, recovery, and recycling, you can return the equipment marked with this symbol to your local supplier upon the purchase of equivalent new equipment, or dispose of it in designated collection points. Further information can be found on the following website: *www.recyclethis.info.*

European representative for manufacture: UTC Fire & Security B.V., Kelvinstraat 7, 6003 DH Weert, Netherlands.

Versions

Information in this manual applies to the following versions of system development or configuration software.

EST2 Version 3.2
EST3 Version 3.6
QS-CU Version 1.8

Content

Important information ii
Related documents iii
Installation codes and standards iii

Chapter 1 **Product design 1**
Introducing the SIGA-REL 3
Fire suppression systems 4
Compatible panels and devices 6
Specifications 10
Application block diagrams 12
Fire suppression application 14
Release sequences 16

Chapter 2 **Installation 19**
Mounting the SIGA-REL 20
Setting abort mode and delay times 22
Reading the LEDs 24
Wiring the SIGA-REL 25
Warning notice placards 29

Chapter 3 **Programming 33**
Programming the SIGA-REL in the 2-SDU 35
Programming the SIGA-REL in the 3-SDU 39
Programming the SIGA-REL in the QS-CU 43

Chapter 4 **Testing and troubleshooting 51**
Code requirements for testing 52
System testing 52
SIGA-REL fault messages on EST2 panels 55
SIGA-REL fault messages on EST3 panels 56
SIGA-REL fault messages on QuickStart panels 57

Index 59

Important information

Limitation of liability

This product has been designed to meet the requirements of NFPA 72 *National Fire Alarm Code,* UL 864 *Standard for Control Units for Fire Protective Signaling Systems,* and ULC S527 *Standard for Control Units for Fire Alarm Systems.* Installation in accordance with this manual, applicable codes, and the instructions of the authority having jurisdiction is mandatory. UTC Fire & Security shall not under any circumstances be liable for any incidental or consequential damages arising from loss of property or other damages or losses owing to the failure of UTC Fire & Security products beyond the cost of repair or replacement of any defective products. UTC Fire & Security reserves the right to make product improvements and change product specifications at any time.

While every precaution has been taken during the preparation of this manual to ensure the accuracy of its contents, UTC Fire & Security assumes no responsibility for errors or omissions.

FCC compliance

This equipment can generate and radiate radio frequency energy. If the equipment is not installed in accordance with this manual, it may cause interference to radio communications. This equipment has been tested and found to comply with the limits for Class A computing devices pursuant to Subpart B of Part 15 of the FCC Rules. These rules are designed to provide reasonable protection against such interference when this equipment is operated in a commercial environment. Operation of this equipment is likely to cause interference, in which case the user, at his own expense, will be required to take whatever measures may be required to correct the interference.

Related documents

EST2 documentation	*EST2 Installation and Service Manual* (P/N 270186)
	EST2 Network Supplement Manual (P/N 270894)
	EST2 System Operations Manual (P/N 270188)
	EST2 System Programming Manual (P/N 270187)
	EST2 Installation Sheets (P/N 3100056)
	2-SDU Online Help
EST3 documentation	*EST3 Installation and Service Manual* (P/N 270380)
	EST3 System Operations Manual (P/N 270382)
	EST3 Installation Sheets (P/N 3100051)
	EST3 International Supplement Manual (P/N 270925)
	3-SDU Help
QuickStart documentation	QS1 Technical Reference Manual (P/N 3100184)
	QS4 Technical Reference Manual (P/N 3100186)
	QuickStart Configuration Utility Online Help (P/N 7350047)
Signature Series documentation	Signature Series Intelligent Smoke and Heat Detectors Applications Bulletin (P/N 270145)
	Signature Series Component Installation Manual (P/N 270497)
	Serial Number Log Book (P/N 270267)
EST Publications: Speaker and strobe documentation	EST Speaker Application Guide (P/N 85000-0033)
	Handbook of Visual Notification Appliances for Fire Alarm Applications (P/N 85001-0541)

Installation codes and standards

The Signature Series fire detection devices are designed to meet the requirements of NFPA Standard 72, Underwriters Laboratories, Inc. Standard 864, and Underwriters Laboratories of Canada, Inc. Standard ULC S527. Other related codes and standards are listed below. Information contained in this document is intended to serve as a guide. Installation in accordance with the instruction sheets (provided with Signature Series devices), applicable codes, and the instructions of the AHJ is mandatory.

National Fire Protection Association (NFPA)	NFPA 11 *Low-Expansion Foam Systems* NFPA 12 *Carbon Dioxide Extinguishing Systems* NFPA 11A *Medium- and High-Expansion Foam Systems* NFPA 12A *Halon 1301 Fire Extinguishing Systems* NFPA 13 *Sprinkler Systems* NFPA 15 *Water Spray Fixed Systems for Fire Protection* NFPA 16 *Deluge Foam-Water Sprinkler and Foam-Water Spray Systems* NFPA 17 *Dry Chemical Extinguishing Systems* NFPA 70 *National Electric Code* NFPA 72 *National Fire Alarm Code* NFPA 2001 *Standard on Clean Agent Fire Extinguishing Systems*
Underwriters Laboratories, Inc. (UL)	QuickStart: UL 864 (8th Edition) *Control Units for Fire-Protective Signaling Systems* EST2: UL 864 (8th Edition) *Standard for Control Units for Fire Protective Signaling Systems* EST3: UL 864 (9th Edition) *Standard for Control Units and Accessories for Fire Alarm Systems*
Underwriters Laboratories, Canada (ULC)	ULC S527 *Standard for Control Units for Fire Alarm Systems*
Factory Mutual Research Corporation (FM)	1011-1012 *Deluge and Preaction Systems*
European standards	73/23/EEC *Low Voltage Directive* 89/336/EE *Electromagnetic Compatibility Directive* (as amended by 9/31/EEC) EN 50130-4; 1995 *Immunity requirements for Components of Fire, Intruder, and Social Alarm Systems* EN 55022:1995 *Limits and Methods of Measurement of Radio Disturbance Characteristics of Information Technology Components*
Other requirements	Other requirements that affect the installation of this system include: • State and local building codes • Instructions of the AHJ

Chapter 1
Product design

Summary

This chapter provides information for system designers. The SIGA-REL supports a variety of fire suppression applications. These applications include sprinkler systems and automatic fire extinguishing systems. The SIGA-REL works with manual and automatic inputs. This chapter explains how the SIGA-REL fits into a fire alarm system and how it behaves during fire alarms.

Content

Introducing the SIGA-REL 3
- Description 3
- Features 4

Fire suppression systems 4
- Sprinkler systems 4
- Automatic fire extinguishing systems 5

Compatible panels and devices 6
- Panels 6
- Software 7
- Power supplies 7
- Notification appliances 7
- Solenoid control relays 8
- Manual release stations 8
- Abort stations 8
- Service disconnect stations 8
- Releasing solenoid valves 9
- Listing agencies 9

Specifications 10

Application block diagrams 12
- System overview 12
- Preaction or deluge sprinkler systems 13

Automatic fire extinguishing systems 14
Fire suppression application 14
Release sequences 16
Automatic release sequence 16
Manual release sequence 18

Introducing the SIGA-REL

Description

The SIGA-REL Releasing Module (Figure 1) is a Signature Series component consisting of:

- Two supervised release circuits
- Two supervised prerelease circuits
- One supervised manual release input circuit
- One zone relay output (Form C contact)
- One supervised abort circuit for a normally-open abort switch

Figure 1: SIGA-REL Releasing Module

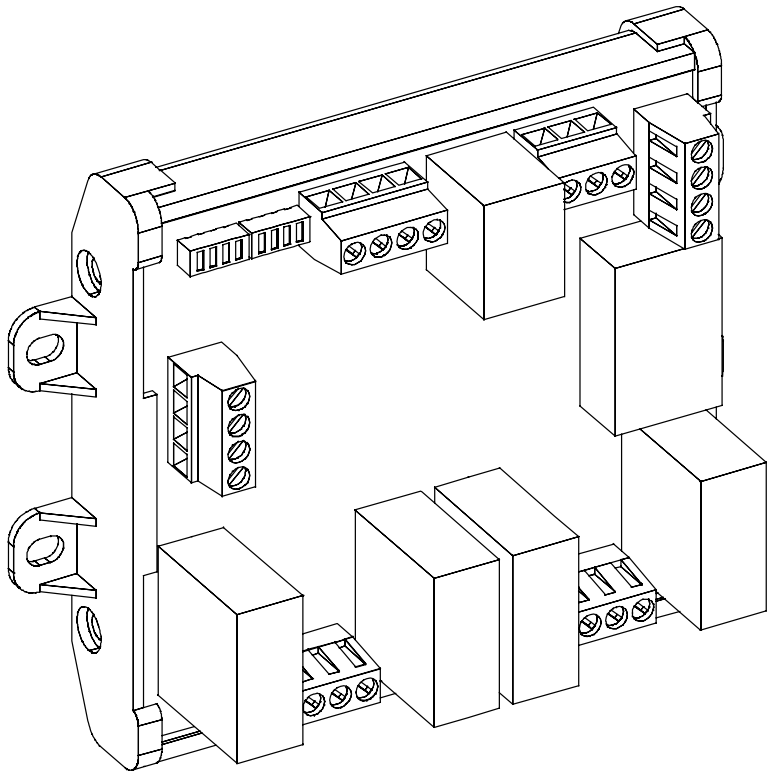

The SIGA-REL controls operations for deluge, preaction, and automatic fire extinguishing systems. The release circuits control the release of gas and other fire suppression agents by controlling the release solenoids. The release circuits operate in unison and cannot be controlled separately.

Prerelease circuit 1 supports audible notification appliances that sound alert, prerelease, and release signals. Prerelease circuit 2 supports visual notification appliances.

Features

The SIGA-REL includes an intelligent microprocessor that supports:

- Deluge sprinkler operation
- Preaction sprinkler operation
- Automatic fire extinguishing operation
- Selectable abort modes

Fire suppression systems

Sprinkler systems

The SIGA-REL works with two types of sprinkler systems: deluge and preaction. The primary difference between these systems is the type of sprinkler head (or nozzle) that terminates the pipes. Table 1 outlines the Factory Mutual Research Corporation (FM) requirements for deluge and preaction systems. FM also requires FM Approved compatible release valves. See Table 4 in the topic “Compatible panels and devices.”

Table 1: FM requirements for deluge and preaction systems

Specification	Value
Standby operation	90 hours
Alarm operation	10 minutes
NFPA style	Class A (Style D or E) Class A (Style 2α, 5, 6, or 7)

Deluge sprinkler systems

In *deluge* sprinkler systems, open-valve sprinkler heads terminate pipes connected to a water supply controlled by a single valve. When the system detects a fire, it automatically opens the valve to allow the water to flow through all of the sprinkler heads. Deluge sprinklers are useful for applications that require the simultaneous discharge of water through every sprinkler.

The following fire detection systems meet FRMC requirements for deluge systems:

- Wet pilot sprinkler line
- Dry pilot sprinkler line
- Hydraulic rate-of-rise
- Pneumatic rate-of-rise
- Electric

Preaction sprinkler systems

In *preaction* sprinkler systems, closed-valve sprinkler heads terminate pipes connected directly to a water supply. The water supply is usually in the same area as the sprinklers, and the pipes are supervised for air pressure. Preaction sprinklers are useful where it is important to prevent the accidental discharge of water.

The following fire detection systems meet FRMC requirements for preaction systems:

- Hydraulic rate-of-rise
- Pneumatic rate-of-rise
- Electric

Automatic fire extinguishing systems

Automatic fire extinguishing systems automatically detect and extinguish fires. They require no manual input because detectors automatically activate releasing solenoids or sprinkler valves.

Improper application of fire suppression agents can lead to property damage, injury, or loss of life. Consult the applicable NFPA documents and the AHJ for more information.

Table 2 provides a list of the fire suppression agents and the applicable NFPA documents.

Table 2: Fire suppression agents and NFPA standards

Agent	NFPA standard
Low-expansion foam	NFPA 11
Medium- and high-expansion foam	NFPA 11A
Carbon dioxide	NFPA 12
Halon 1301	NFPA 12A

Agent	NFPA standard
Sprinklers	NFPA 13
Water spray	NFPA 15
Foam-water	NFPA 16
Dry chemicals	NFPA 17
Clean agent	NFPA 2001

Table 3 outlines the FM requirements for automatic fire extinguishing systems.

Table 3: FM requirements for automatic fire extinguishing systems

Specification	Value
Standby operation	24 hours
Alarm operation	10 minutes
NFPA style	B or D
FM documentation	FMRC Approval Guide (Volume 1)

Compatible panels and devices

Panels

The SIGA-REL is compatible with EST2, EST3, and QuickStart fire alarm control panels.

Note: The SIGA-REL has not been tested with the QuickStart fire alarm control panel for UL 864 9th edition, and may not comply with the latest editions of NFPA 72 and UL 864. This application requires the approval of the local authority having jurisdiction (AHJ).

The SIGA-REL must be installed in an enclosure dedicated to the releasing system. No other devices may be installed in the enclosure. You can install the SIGA-REL in any of the following enclosures:

- 2-WB series
- 3-RCC series
- 3-CAB series
- MFC-A

- RACCR series

Maintain a 1-inch (25.4 mm) minimum clearance all around the SIGA-REL. The clearance space must also comply with NFPA 70, the *National Electrical Code*.

Software

You will need the latest version of the system definition utility or configuration utility for your EST2, EST3, or QuickStart system. These are available from our website:

- For EST2: 2-SDU
- For EST3: 3-SDU
- For QuickStart: QS-CU

Power supplies

The SIGA-REL is compatible with the following power supplies:

- 2-PPS, 2-PPS/220
- 2-PPS/6A, 2-PPS/6A-220
- 3-BPS/M, 3BPS/M-230
- 3-PPS/M, 3-PPS/M-230
- BPS6A*, BPS6A/230*
- BPS10A*, BPS10A/230*

* Not compatible with FM sprinkler applications that require 90 hours of standby.

Note: The SIGA-REL is not compatible with the QuickStart power supply (PS6 Power Supply Card).

Notification appliances

The SIGA-REL prerelease circuits support audible and visible notification appliances. You must use appliances that are compatible with the fire alarm control panel. Refer to the control panel documentation for a list of compatible appliances.

Note that the SIGA-REL is not designed to generate an ANSI S3.41 tone, and does not meet UL 864 requirements for an audible alarm notification circuit intended for evacuation.

Solenoid control relays

To activate the releasing solenoids, you must use RELA-EOL relays as solenoid control relays. These relays buffer the SIGA-REL from valve solenoid spikes. For more information, see the RELA-EOL installation sheet.

Manual release stations

For manual release stations, the SIGA-REL requires normally-open, dry contact signal initiating devices. The manual release station controls only the SIGA-REL to which it is connected.

Manual release stations must be listed with the appropriate agencies in your area. See the heading “Listing agencies,” later in this topic.

The following manual release stations are approved by FM for use with the SIGA-REL:

- 276A-REL - Manual Release Station
- 278A-REL - Double Action Manual Release Station

When using NFPA 12A and NFPA 2001 suppression agents, a separate, mechanical manual release is required in addition to the release station connected to the SIGA-REL.

Abort stations

The SIGA-REL requires normally-open, momentary-action abort stations. The abort station controls only the SIGA-REL to which it is connected.

Abort stations must be listed with the appropriate agencies in your area. See the heading “Listing agencies,” later in this topic.

The RELA-ABT - Manual Abort Station is approved by FM for use with the SIGA-REL.

Service disconnect stations

The SIGA-REL requires listed service disconnect stations that are normally closed (minimum 2.0 Amps).

Service disconnect stations must be listed with the appropriate agencies in your area. See the heading “Listing agencies,” later in this topic.

The RELA-SRV-1 - Service Disconnect Switch is approved by FM for use with the SIGA-REL.

Releasing solenoid valves

Releasing solenoid valves must be listed with the appropriate agencies in your area. FM requires FM Approved release valve solenoids. Table 4 lists the FM Approved solenoid release valves that work with the SIGA-REL.

Table 4: FM Approved solenoid release valves

Group	Manufacturer	Model
A	Skinner	LV2LBX25
B	ASCO	T8210A107 R8210A107 8210A107
D	ASCO	8210G207 HV2648571 HV2648581
E	Skinner	73218BN4UNLVNOC111C2 73212BN4TN00N0C111C2
F	Skinner	73212BN4TNLVNOC322C2
G	Skinner	71395SN2ENJ1NOH111C2
H	Viking	HV-274-060-001

Table 5: UL/ULC Listed solenoid release valves

Manufacturer	Model
Ansul	73327
ASCO	T8210A107 R8210A107 8210A107 8210G207
Skinner	LV2LBX25 73218BN4UNLVNOC111C2 73212BN4TNLVNOC322C2 71395SN2ENJ1NOH111C2

Listing agencies

Listing agencies whose codes and standards may apply in your area include:

- Factory Mutual Research Corporation (FM)
- Underwriters Laboratories, Inc. (UL)
- Underwriters Laboratories Canada (ULC)

Specifications

Table 6: SIGA-REL specifications

Power riser	Input voltage: 18.4 to 27.4 VDC
	Supervisory current: 17 mA, max.
	Alarm current: 190 mA min., 4 A max. (depends on output circuit loading)
	Line resistance: See Table 7.
	UL rating: must be power-limited
Release circuits, TB4	Release circuit 1: TB4-1 and TB4-2, 2 A at 24 VDC max. [1]
	Release circuit 2: TB4-3 and TB4-4, 2 A at 24 VDC, max. [1]
	Valves per circuit: 4 valves, max.
	Line resistance: See Table 8
	End of line device: 47 kΩ resistor
	Supervision: Open, short, and ground
	UL rating: Special application, supervised and power-limited
Prerelease circuits, TB5	Prerelease circuit 1: TB5-1 and TB5-2, 2 A at 24 VDC, max. [1]
	Prerelease circuit 2: TB5-3 and TB5-4, 2 A at 24 VDC, max. [1]
	Line resistance: See Table 8
	End of line device: 47 kΩ resistor
	Supervision: Open, short, and ground
	UL rating: Special application, supervised and power-limited
Manual release input circuit, TB3-1 and TB3-2	Line resistance: 25 Ω/wire, 18 AWG = 3,800 ft (0.75 sq mm = 1,158 m)
	End of line device: 47 kΩ resistor
	Circuit capacitance: 0.1 μF, max.
	Supervision: Open and ground
Abort circuit, TB3-3 and TB3-4	Line resistance: 25 Ω/wire, 18 AWG = 3,800 ft (0.75 sq mm = 1,158 m)
	End of line device: 47 kΩ resistor
	Circuit capacitance: 0.1 μF, max.
	Supervision: Open and ground
Zone relay output, TB2	Zone relay output
	Contact rating: 3 A at 24 VDC, (resistive load) Form C

Signature data line, TB1	Operating voltage: 15.2 to 19.95 VDC Supervisory current: 1 mA Alarm current: 1 mA Line resistance: See the installation sheet for the Signature loop controller Maximum quantity: 10 SIGA-RELs per loop
Environmental conditions	Operating temperature: 32 to 120 °F (0 to 49 °C) Storage temperature: -4 to 140 °F (-20 to 60 °C) Humidity: 0 to 93% RH, noncondensing

[1] Riser current: The total current of the prerelease and release circuits is limited to 3.83 A. This is the power riser maximum input current of 4 A, minus 170 mA.

Table 7: Power riser

Total riser current (A)	Distance from SIGA-REL to power supply				Wire resistance [1]
	12 AWG	2.5 sq mm	14 AWG	1.5 sq mm	
4.0	29 ft	8.84 m	20 ft	6.10 m	0.050
3.5	34 ft	10.36 m	23 ft	7.01 m	0.057
3.0	39 ft	11.89 m	27 ft	8.23 m	0.067
2.5	47 ft	14.33 m	32 ft	9.75 m	0.080
2.0	59 ft	17.98 m	40 ft	12.19 m	0.100
1.5	78 ft	23.77 m	53 ft	16.15 m	0.133
1.0	118 ft	35.97 m	80 ft	24.38 m	0.200

[1] Wire resistance measured in Ω per wire

Table 8: Prerelease and release circuits (per circuit)

Total riser current (A)	Distance from SIGA-REL to signals				Wire resistance [1]
	12 AWG	2.5 sq mm	14 AWG	1.5 sq mm	
2.00	176 ft	53.64 m	120 ft	36.58 m	0.300
1.75	202 ft	61.57 m	137 ft	41.76 m	0.343
1.50	235 ft	71.63 m	160 ft	48.77 m	0.400
1.25	282 ft	85.95 m	192 ft	58.52 m	0.480
1.00	353 ft	107.59 m	240 ft	73.15 m	0.600
0.50	706 ft	215.19 m	480 ft	146.30 m	1.200

[1] Wire resistance measured in Ω per wire

Table 9: Compliance requirements

Item	Requirement
Power riser	When two or more SIGA-RELs are powered from a single riser, those SIGA-RELs must be in the same notification zone.
NAC synchronization	UL 864 requires synchronization of notification appliances when they are in the same notification zone. This means that when more than one SIGA-REL is installed, the audible and visible notification appliances controlled by each SIGA-REL must operate in separate notification zones. The notification appliance output from two SIGA-RELs cannot be audible or visible within the same notification zone.
Evacuation tone	The SIGA-REL is not designed to generate an ANSI S3.41 tone, and does not meet UL 864 requirements for audible alarm notification circuits intended for evacuation. Notification zones must include additional NACs and appliances capable of producing the required evacuation tone to meet these requirements.
Horns	Horn signaling patterns are controlled by the SIGA-REL, so configurable horns must be set for steady output.
Manual release station	The manual release station controls only the SIGA-REL to which it is connected. When using NFPA 12A and NFPA 2001 suppression agents, a separate, mechanical manual release is required in addition to the release station connected to the REL.
Abort station	The abort station controls only the SIGA-REL to which it is connected. However, activation of the abort switch must be annunciated at all panels in a network. UL 864 allows only one abort station per suppression area. This means you cannot install more than one SIGA-REL per suppression area.
Zone relay output	Zone relay output contacts cannot be used for a notification appliance circuit or a nonaddressable signaling line circuit.
Service disconnect station	Activation of the service disconnect must be annunciated as a supervisory event at all panels in a network.

Application block diagrams

System overview

The SIGA-REL is a Signature Series module that interfaces a Signature loop controller with fire suppression components. The SIGA-REL module works with

sprinkler systems and automatic extinguishing systems. Sprinklers include preaction and deluge systems. Automatic fire extinguishing systems include the fire suppression agents listed in Table 2.

The SIGA-REL includes two releasing circuits. These control RELA-EOL relays, which in turn control the releasing solenoids. The releasing circuits act in unison and cannot be controlled separately.

Prerelease circuit 1 supports audible notification appliances in order to sound alert, prerelease, and release signals. The alert tone sounds at 15 pulses per minute; the prerelease tone at 60 pulses per minute. The release tone is a steady tone. Prerelease circuit 2 supports visual notification appliances.

Note: These signals do not meet UL 864 requirements for audible alarm notification circuits intended for evacuation. This application requires additional NACs and audible devices capable of generating the required ANSI S3.41 audible emergency evacuation signal pattern.

See Chapter 2 “Installation” on page 19 for details about SIGA-REL wiring, specifications, mounting, and abort mode settings. For wiring resistance calculations, see the topic “Specifications,” earlier in this chapter.

Preaction or deluge sprinkler systems

Figure 2 illustrates the integration of the SIGA-REL with the fire alarm control panel and a preaction or deluge sprinkler system. Sprinkler systems do not include service disconnect stations, abort stations, or manual release stations.

Figure 2: Integration of the SIGA-REL with a deluge or preaction sprinkler system

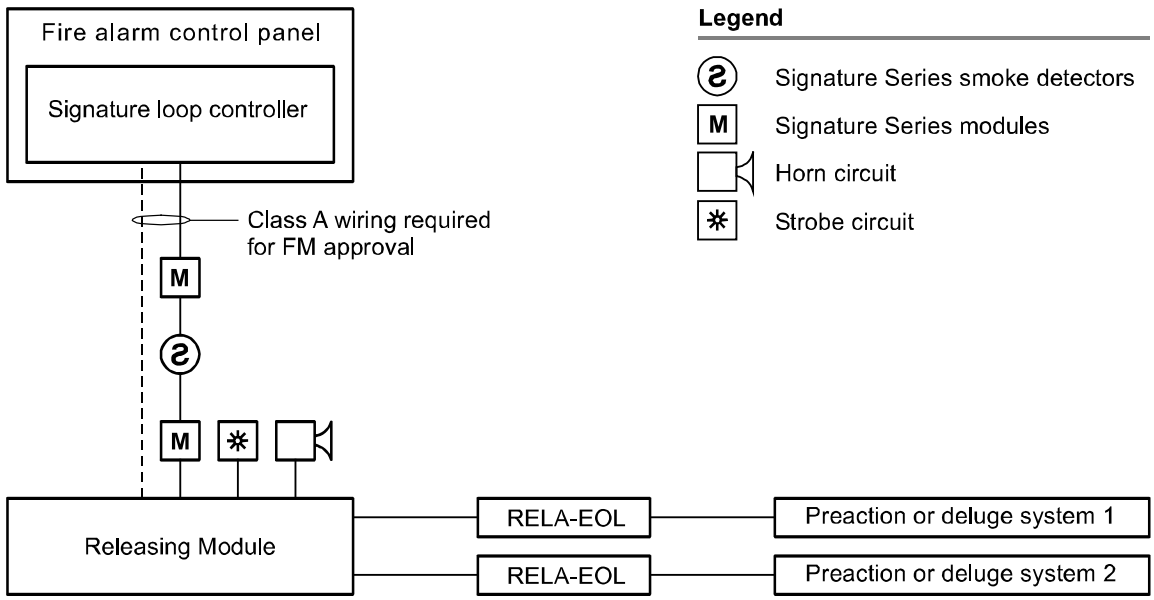

Automatic fire extinguishing systems

The SIGA-REL also supports automatic extinguishing systems, which provide manual actuation of abort, release, and service-disconnect functions. Figure 3 illustrates the integration of the SIGA-REL with a fire alarm control panel in an automatic fire extinguishing system.

Figure 3: Integration of the SIGA-REL with an automatic extinguishing system

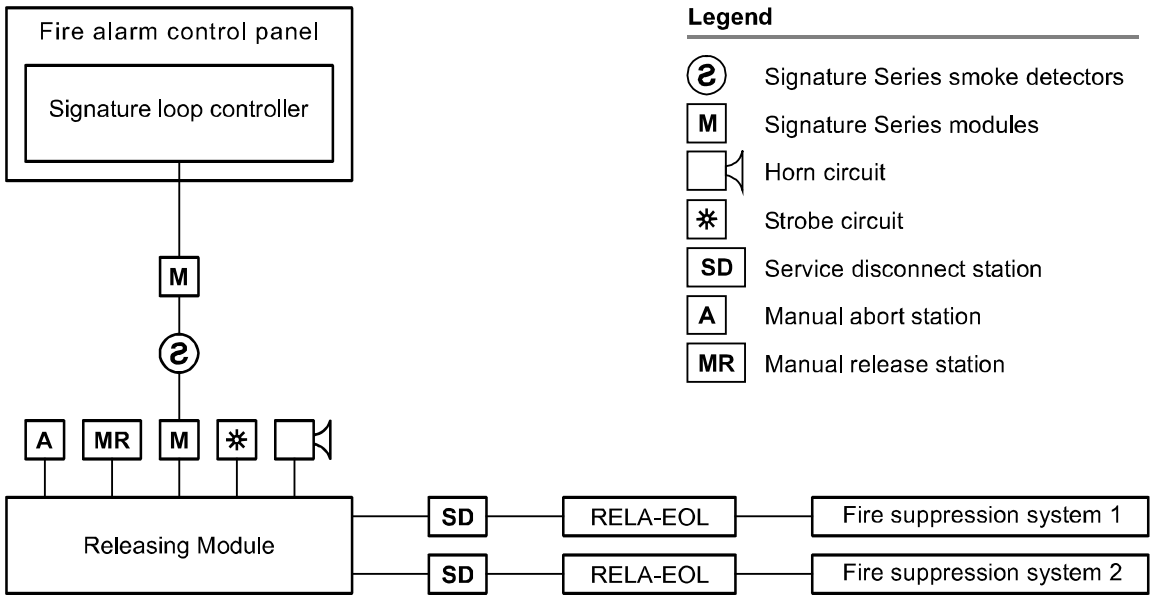

Fire suppression application

The SIGA-REL includes two releasing circuits, which can provide fire suppression in two separate areas. The releasing circuits operate in unison and cannot be controlled separately. The computer room illustrated in Figure 4 is a typical application for the Releasing Module.

Figure 4: Typical computer room application

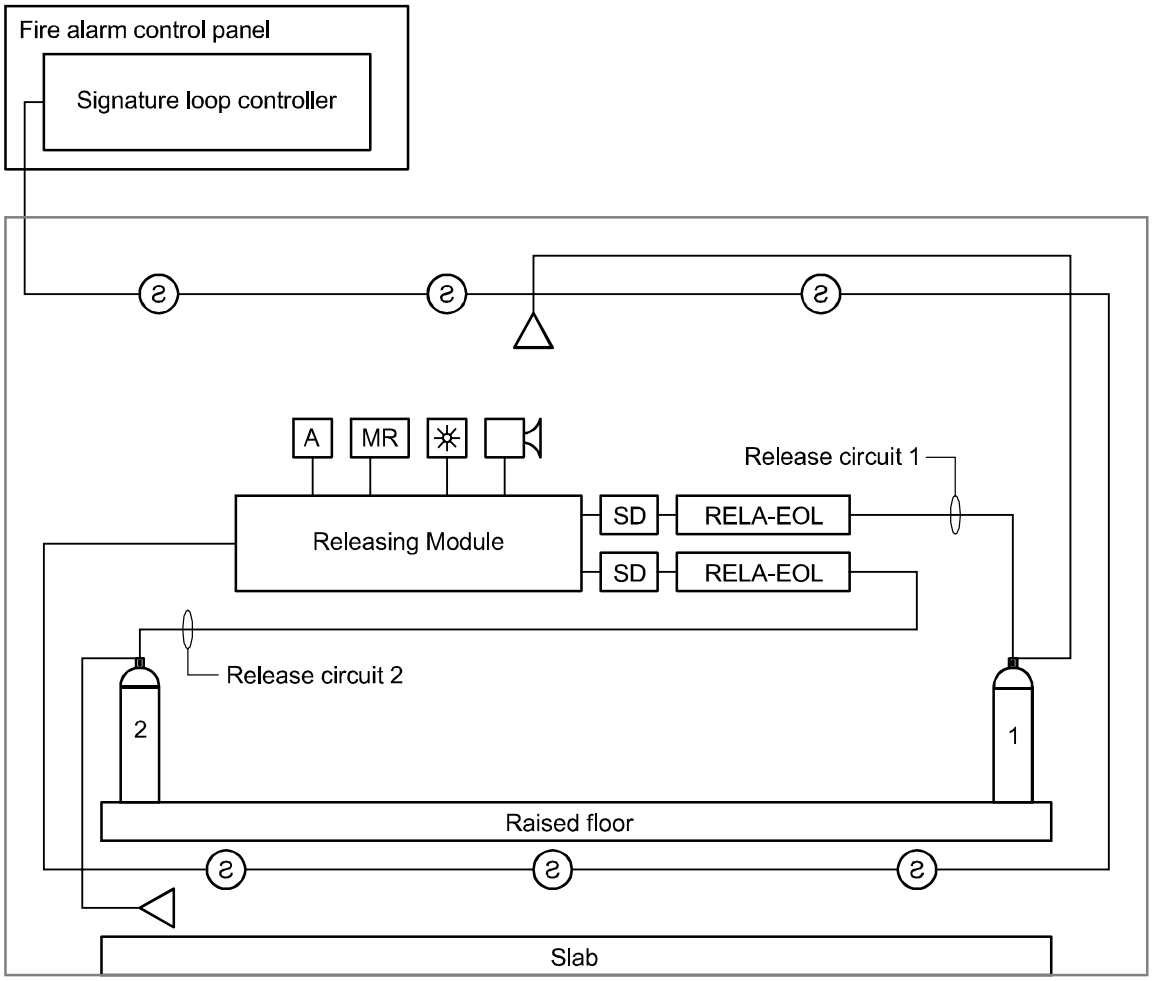

Legend

- Signature Series smoke detectors
- Horn circuit
- Wall-mounted agent release nozzle
- Ceiling-mounted agent release nozzle
- MR — Manual release station
- SD — Service disconnect station
- A — Manual abort station
- Strobe circuit
- Extinguishing agent storage cylinder

Release sequences

Automatic release sequence

The automatic release sequence requires an AND group or a matrix group. AND groups and matrix groups require fire alarm signals from designated Signature Series devices.

These logic groups are programmed using a PC and the System Definition Utility (SDU) or Configuration Utility (CU) for your system. Figure 5 explains the automatic release sequence.

Note: EST2 systems do not support matrix groups. See Chapter 3 “Programming” on page 33 for details on AND group rules. To create AND groups, see the *EST2 System Programming Manual* and the *2-SDU Online Help.*

The SIGA-REL horn circuit is not designed to generate an ANSI S3.41 tone, and does not meet UL 864 requirements for audible alarm notification circuits intended for evacuation. Notification zones must include additional NACs and appliances capable of producing the required evacuation tone to meet these requirements.

Figure 5: Automatic release sequence

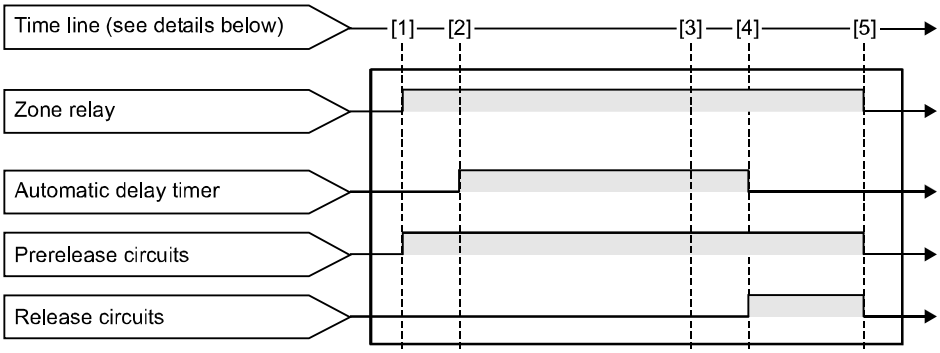

[1] A detector signals the first alarm. This event simultaneously activates the:

- Zone relay
- Strobe circuit (on steady)
- Horn circuit alert tone (15 pulses per minute)

[2] A detector in the protected area signals a second alarm and meets the AND group conditions.* After a ten-second delay, the automatic delay timer starts its countdown and the horn circuit changes to the prerelease tone (60 pulses per minute).

*AND group and matrix group conditions depend on programming.

[3] Ten seconds before the automatic delay timer expires, the horn circuit changes to the release tone (steady).

[4] The automatic delay timer expires and the release circuits activate.

[5] A manual reset at the fire alarm control panel deactivates the release solenoids and the Releasing Module returns to the normal state.

Manual release sequence

WARNING: You cannot abort the manual release sequence.

The operation of a manual release station initiates the manual release sequence. Figure 6 explains the manual release sequence.

A manual release overrides all other operations and sequences, including all modes of the abort function.

Figure 6: Manual release sequence

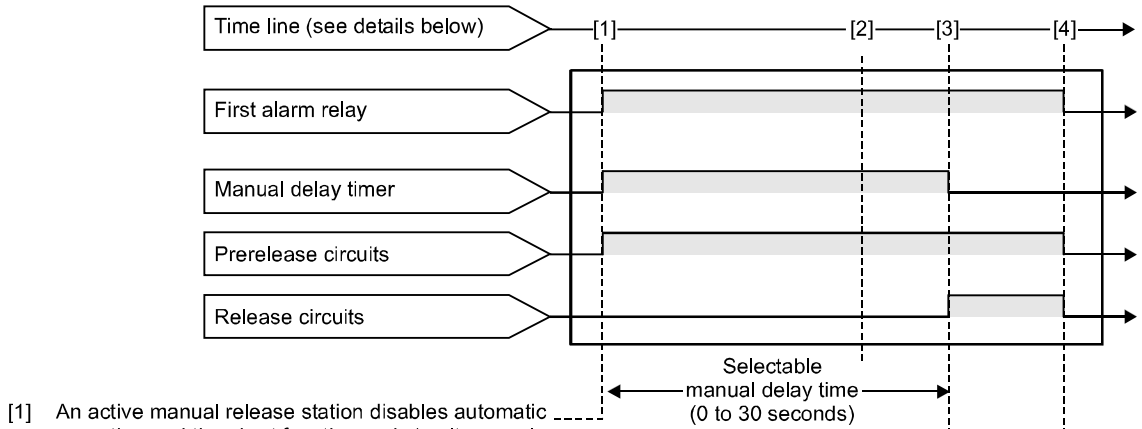

[1] An active manual release station disables automatic operation and the abort function and simultaneously activates the:

- Manual delay timer
- Strobe circuit (on steady)
- Horn circuit prerelease tone (60 pulses per minute)

[2] Ten seconds before the expiration of the manual delay timer, the horn changes to the release tone (steady).

[3] The manual delay timer expires and the release circuits activate.

[4] A manual reset at the fire alarm control panel deactivates the release solenoids and the Releasing Module returns to the normal state.

Chapter 2
Installation

Summary

This chapter shows you how to mount and wire the SIGA-REL. When you install the SIGA-REL, be sure to follow agency and local requirements along with the instructions in this manual.

Content

Mounting the SIGA-REL 20
Setting abort mode and delay times 22
    Choosing the abort mode 22
    Setting the DIP switches 22
Reading the LEDs 24
Wiring the SIGA-REL 25
Warning notice placards 29

Mounting the SIGA-REL

The SIGA-REL and the MFC-A require separation between power-limited and nonpower-limited wiring. See the MFC-A installation sheet for details about power-limited wiring in that enclosure. See the topic “Wiring the SIGA-REL” later in this chapter for details about power-limited wiring on the SIGA-REL.

To mount the SIGA-REL in an MFC-A cabinet:

1. Align the SIGA-REL to the designated mounting holes in the MFC-A (Figure 7 and Figure 8).
2. Secure the SIGA-REL to the MFC-A using the screws and washers provided.
3. Run the wiring from the SIGA-REL to the fire suppression components through the conduit knockouts in the MFC-A.

Figure 7: Mounting the SIGA-REL

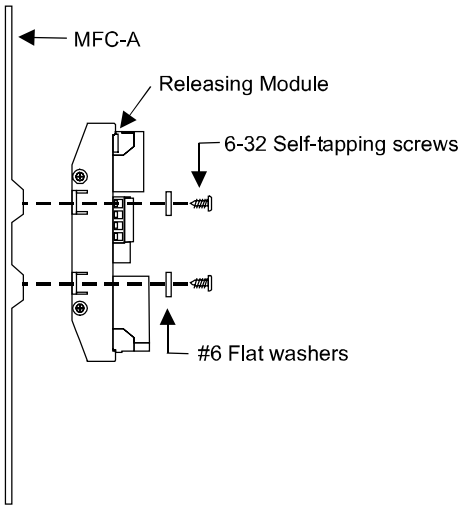

To mount the SIGA-REL in other enclosures:

1. Use the SIGA-REL to mark the mounting hole locations (Figure 9).
2. Drill the mounting holes at the marks made in step 1 (mounting hole diameter = 0.125 in or 3.175 mm).
3. Mount the SIGA-REL in the cabinet using the screws and washers provided.

Figure 8: MFC-A/SIGA-REL footprint

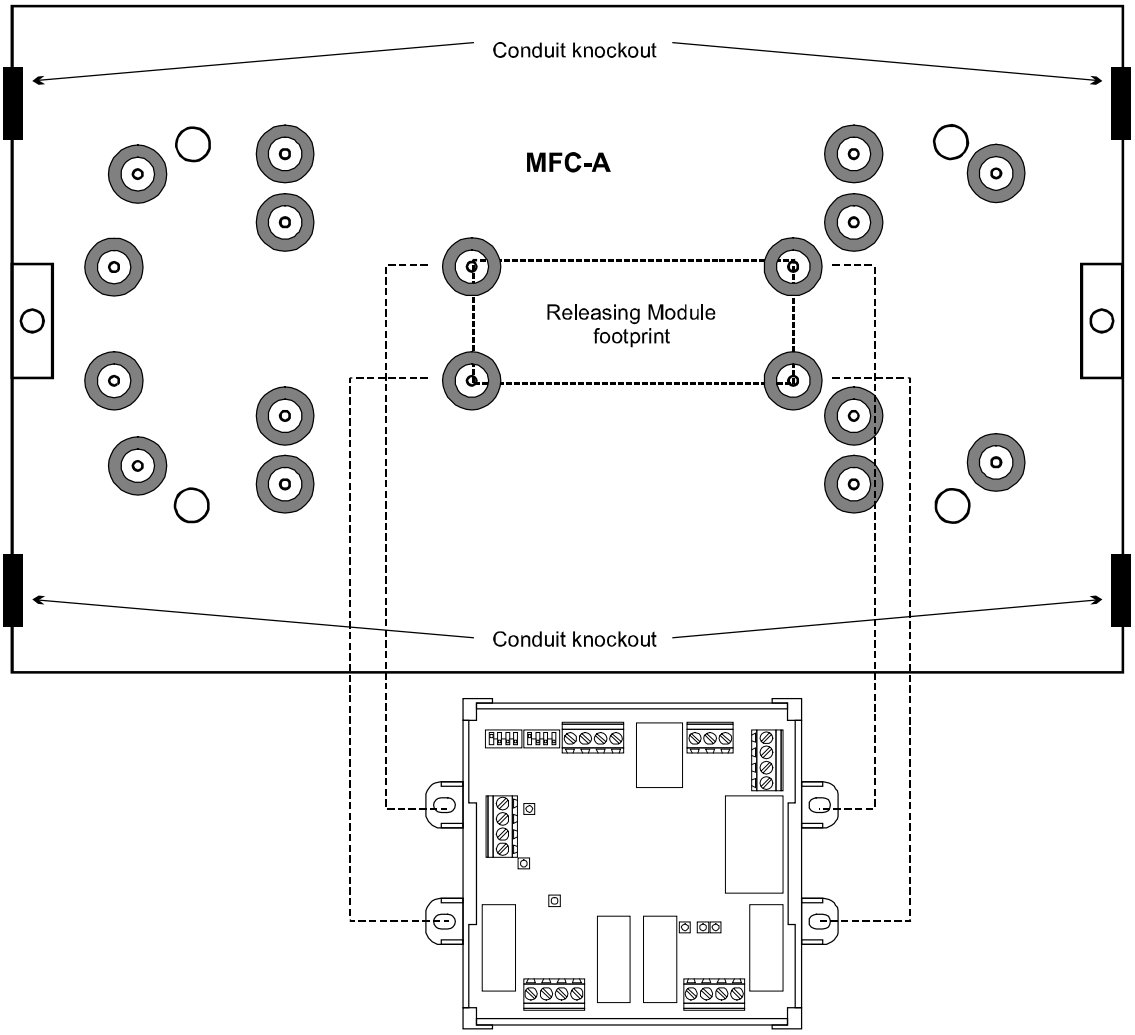

Figure 9: SIGA-REL mounting holes in compatible cabinets

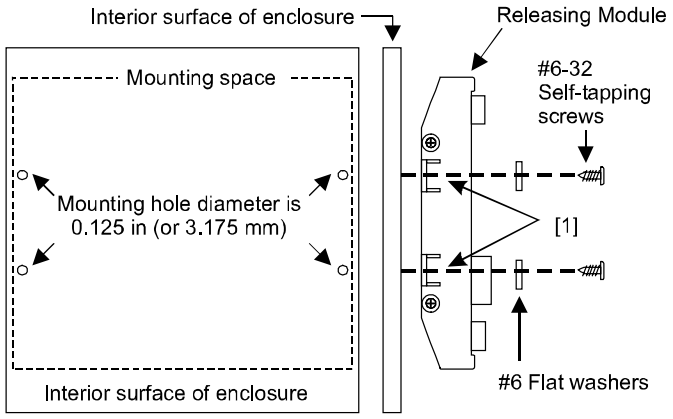

Notes

[1] Mark the mounting hole locations here

2. See compatible enclosure installation sheets for the routing of power-limited and nonpower-limited wiring

Setting abort mode and delay times

Choosing the abort mode

Table 10 provides descriptions for the SIGA-REL abort modes.

Note: Abort modes 3 and 4 do not comply with UL or ULC.

Table 10: Abort mode descriptions

Mode	Description
1 (Factory default)	If the abort is initiated before the automatic delay timer expires, it prevents the releasing action. The automatic delay timer continues to run while the abort is active. When the abort is restored, the release occurs with the expiration of the automatic delay timer or the abort delay timer, whichever occurs last.
2	If the abort is initiated before the automatic delay timer expires, it prevents the releasing action. The automatic delay timer stops running. When the abort is restored, the automatic delay timer resumes and the release occurs with the expiration of the timer.
3 (Industrial Risk Insurers)	To be recognized as valid, the abort must be active when the second alarm is received. When the abort is restored, the release occurs with the expiration of the abort delay timer (set for 10 seconds). If the valid abort is held for more than 10 seconds, the automatic delay timer is inactive. If the valid abort is held for less than 10 seconds, the automatic delay timer operates as programmed.
4 (International)	If the abort is initiated before the automatic delay timer expires, it prevents the releasing action. The automatic delay timer stops running. When the abort is restored, the automatic delay timer resets and commences time from t = 0. The release occurs with the expiration of the timer setting minus 10 seconds.

Setting the DIP switches

Figure 10 shows the default DIP switch settings of the SIGA-REL. DIP switch settings for the SIGA-REL abort modes and delay time settings are shown in Table 11 through Table 14.

Note: If you change the DIP switch settings after completing your installation, programming, and testing, you'll need to reset the fire alarm control panel for the new settings to take effect.

Figure 10: SIGA-REL DIP switches

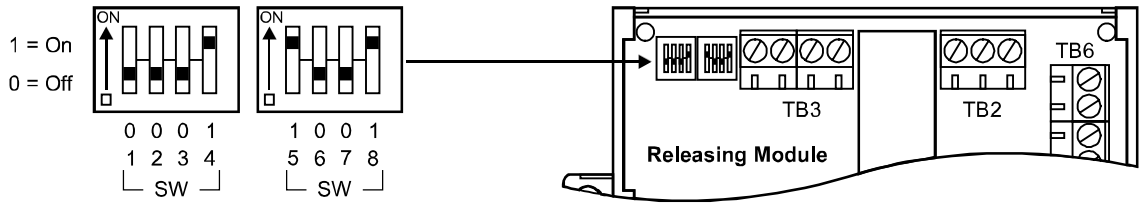

Table 11: Abort mode settings

Abort mode	SW1	SW2
1 (Default)	0	0
2	0	1
3 (IRI)	1	0
4 (International)	1	1

Table 12: Manual delay time settings

Time delay	SW3	SW4
No delay	0	0
10 seconds (Default)	0	1
20 seconds	1	0
30 seconds	1	1

Table 13: Automatic delay time settings

Time delay	SW5	SW6	SW7
10 seconds	0	0	0
20 seconds	0	0	1
30 seconds	0	1	0
40 seconds	0	1	1
50 seconds (Default)	1	0	0

Table 14: Abort delay time settings

Time delay	SW8
No delay	0
10 seconds (Default)	1

Reading the LEDs

Figure 11 shows the location of the LEDs on the SIGA-REL. These are labeled DS1 through DS7.

Figure 11: SIGA-REL LEDs

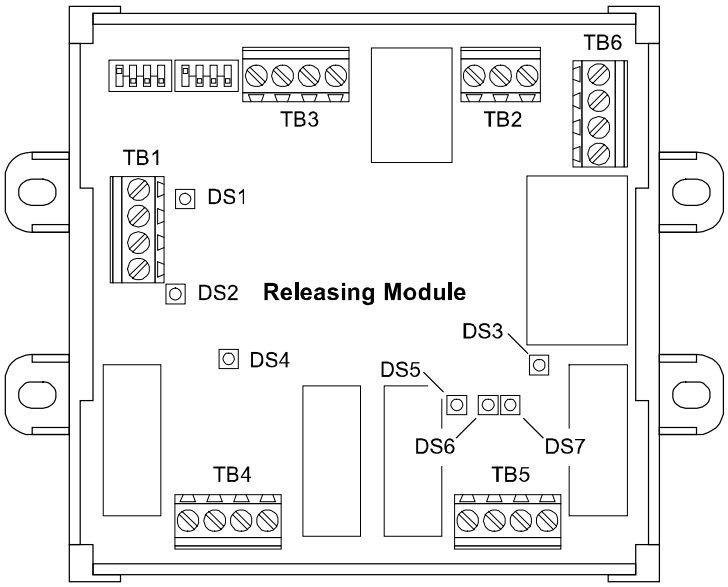

Table 15: SIGA-REL LEDs

LED	Color	Pattern	Function
DS1	Red	Flashing	Data (alarm conditions)
DS2	Green	Flashing	Data (normal conditions)
DS3	Red	Steady	Alarm
DS4	Green	Steady	Power
DS5	Yellow	Steady	Abort
DS6	Yellow	Steady	Trouble
DS7	Red	Steady	Release active

Wiring the SIGA-REL

Caution: Do not connect the releasing solenoids before the system has been programmed and tested, and the Signature loop controller and SIGA-REL have reached their normal state. See Chapter 3 “Programming” and Chapter 4, “Testing and troubleshooting” for details. Failure to follow these instructions can result in unexpected release of the fire suppression agent.

Observe static-sensitive material handling practices while installing or servicing the SIGA-REL. Electrostatic discharge may damage the equipment and activate the release circuits.

Ensure that you are using a compatible power supply, as listed in the topic “Compatible panels and devices” on page 6.

Wire the SIGA-REL according to Figure 13.

If your application requires supervision of the service disconnect station, install and wire components according to Figure 13.

EST2 and EST3 systems have a relay confirmation function that you can program to indicate activation of the prerelease and release relays at the panel. QuickStart systems do not offer relay confirmation, so additional components are required to indicate activation of the prerelease and release relays. See Figure 14 for component and wiring details.

Note: When you use monitor or supervisory event messages to indicate activation of the service disconnect station, prerelease relay, or release relay, you *must* route those messages to the panel.

Figure 12: SIGA-REL wiring

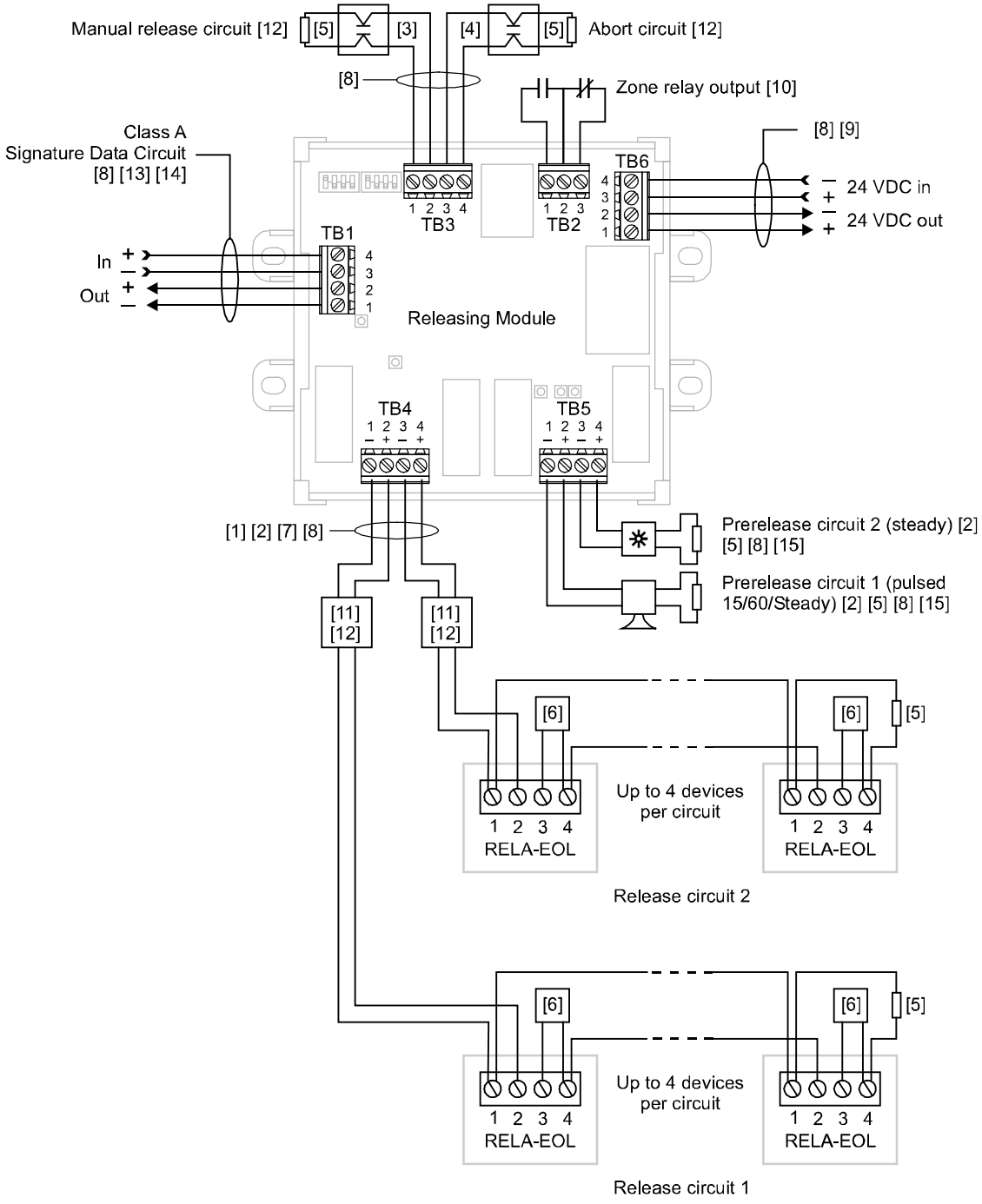

Wiring diagram notes

[1] Four RELA-EOLs per circuit, max.

[2] Class B, 24 VDC output.

[3] Class B, normally-open manual release station.

[4] Class B, normally-open abort station.

[5] Listed 47 kΩ EOL resistor.

[6] Listed 24 VDC nonpolarized valve. The releasing solenoid valve wiring is not supervised. Run the connection to the valve in conduit within 20 feet of the RELA-EOL relay.

[7] Polarity of circuit shown in supervisory state. On alarm, polarity reverses.

[8] Supervised and power-limited.

[9] See “Power supplies” on page 7 for a list of compatible power supplies.

[10] Zone relay output. Power-limited when connected to a power-limited source. If nonpower-limited, maintain 1/4 inch (6.4 mm) separation. Otherwise, use FPL, FPLR, or FPLP in accordance with the National Electric Code (NEC).

[11] Listed service disconnect station. Must be rated for regulated applications and 2A at 24 VDC. See Figure 13 on page 28 for details on supervision of the service disconnect station.

[12] Not used in preaction or deluge sprinkler systems.

[13] Ten Releasing Modules per loop, max.

[14] Class A required for FM-listed deluge or preaction systems.

[15] Compatible notification appliances as specified in the panel documentation. Configurable horns must be set for steady operation.

16. Installations that include other wiring require FPL, FPLR, FPLP, or equivalent NEC-approved wiring for all power-limited wiring.

Figure 13: Supervision of the service disconnect switch

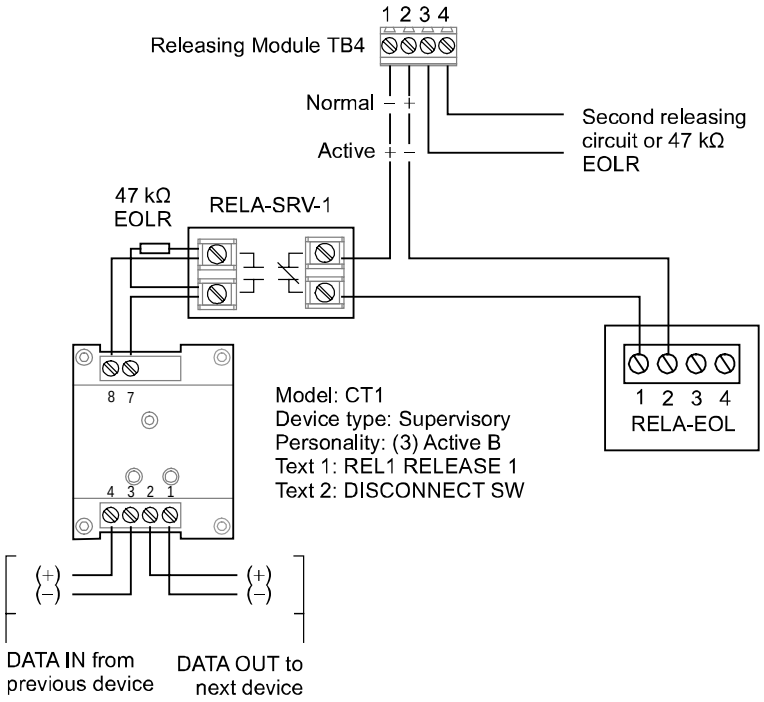

Figure 14: QuickStart annunciation of the prerelease and release relays

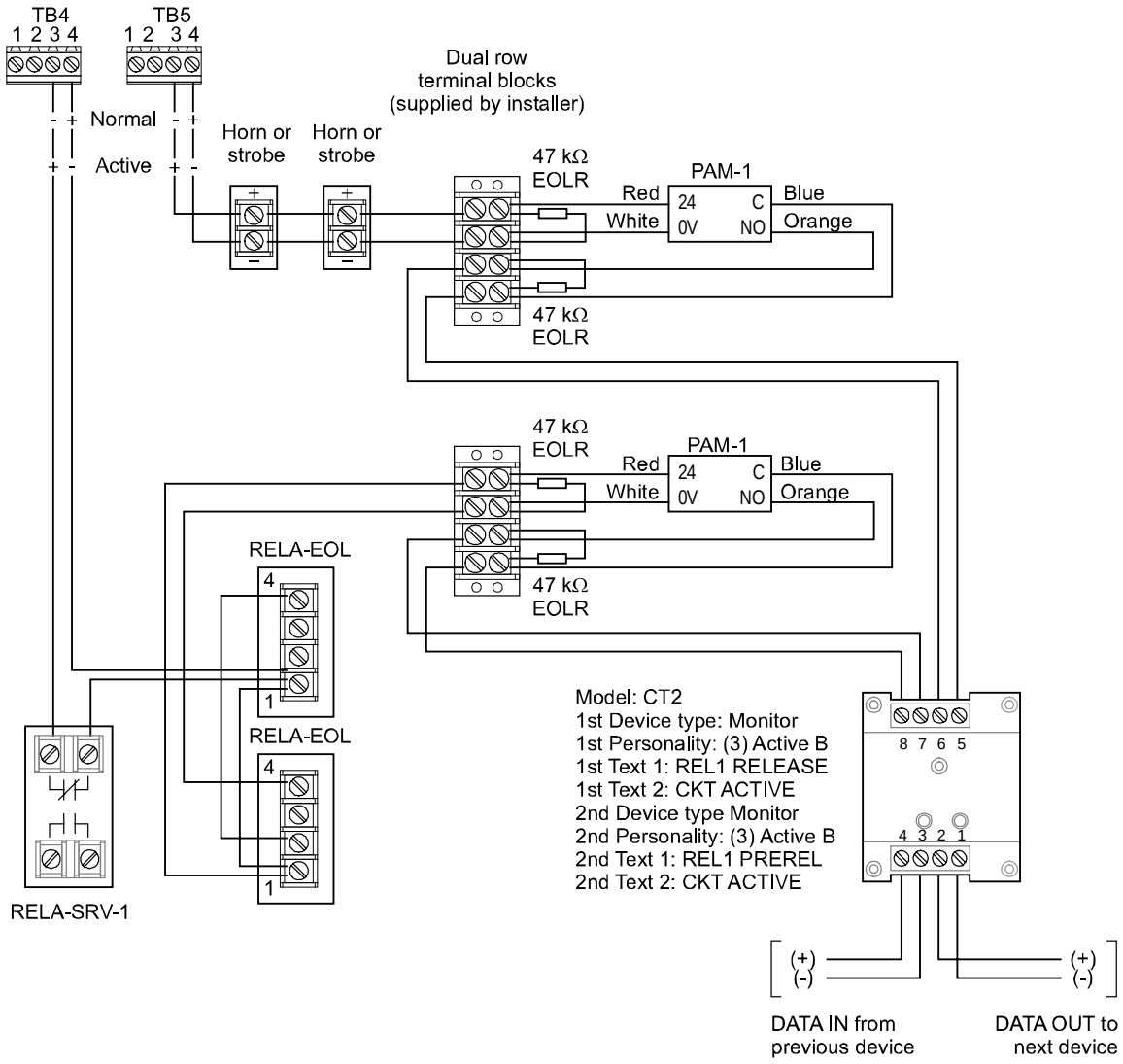

Warning notice placards

To ensure safety with the SIGA-REL:

- Copy Figure 15. Cut out the photocopied placard along the perforated line, and post it next to the SIGA-REL.
- Copy Figure 16. Cut out the photocopied placard along the perforated line, and post it next to the fire alarm control panel.
- Inform all appropriate personnel about the posted warnings, their locations, and their importance.
- Enforce compliance with these warnings during all installation, testing, and service procedures.

Figure 15: SIGA-REL warning notice

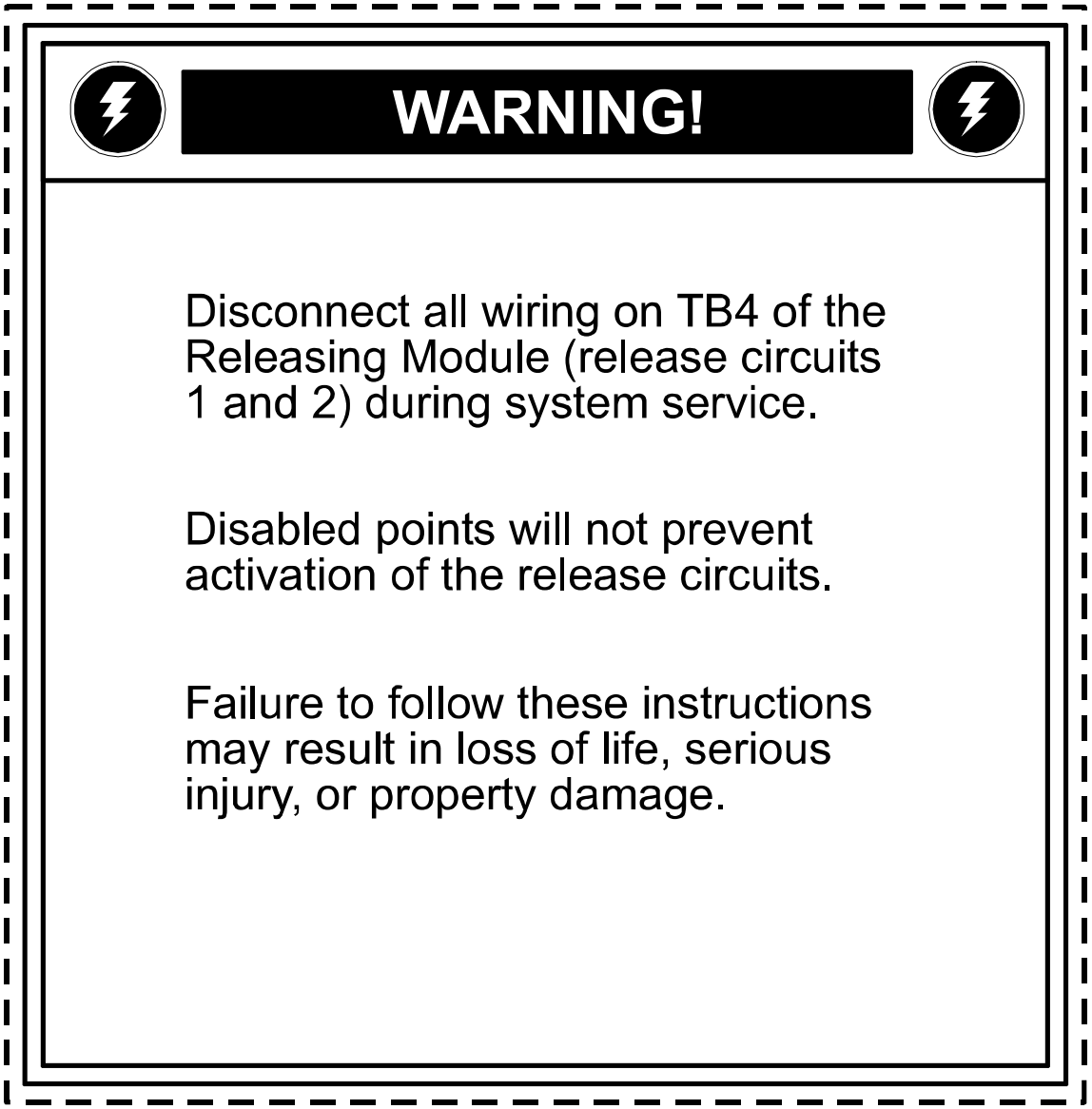

Figure 16: Panel warning notice

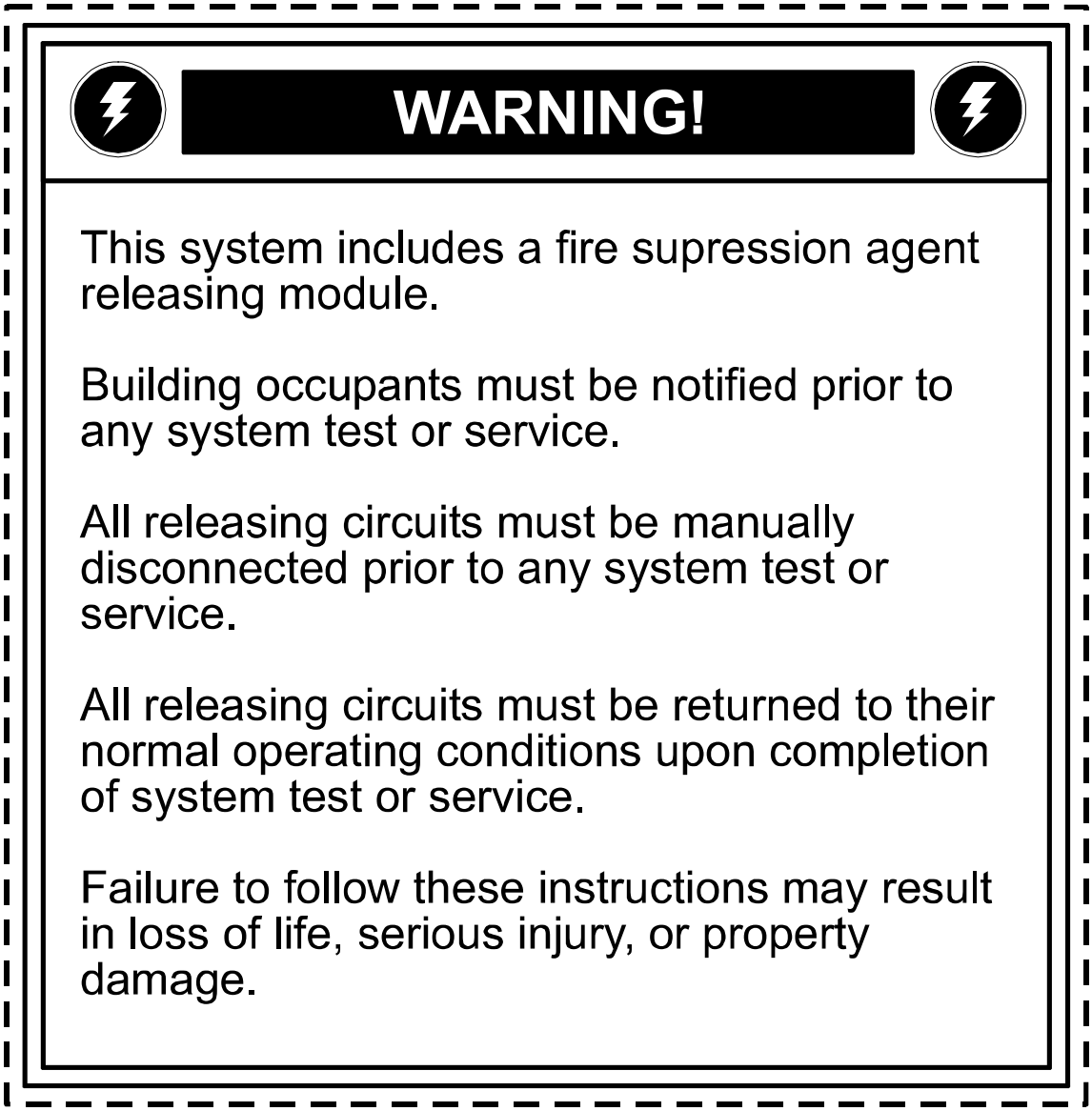

Chapter 3
Programming

Summary

This chapter contains configuration and programming instructions for system programmers. Read the configuration and programming topics that apply to your fire alarm system.

SIGA-REL programming is almost identical for all systems. The greatest differences exist in the rules required and the configuration of AND groups. The SIGA-REL programming steps require strict adherence. Follow each instruction carefully.

Content

Programming the SIGA-REL in the 2-SDU 35
- Adding the SIGA-REL to the database 35
- Creating an abort confirmation LED 37
- Programming an AND group 37
- Reconciling the Signature map 37
- Writing rules for the SIGA-REL 38

Programming the SIGA-REL in the 3-SDU 39
- Adding the SIGA-REL to the database 39
- Programming an AND group 41
- Writing rules for the SIGA-REL 41

Programming the SIGA-REL in the QS-CU 43
- Minimum system requirements 43
- Step 1: Read this first 43
- Step 2: Add the abort and manual release switch circuits 44
- Step 3: Add the two releasing circuits 44
- Step 4: Add the two prerelease circuits 45
- Step 5: Create a prerelease response 46
- Step 6: Create an AND group release response 46
- Step 7: Create a manual release response 47
- Step 8: Supervise the service disconnect switch 47

Step 9: Indicate active prerelease and release circuits 48
Step 10: Create a drill prerelease response 48
Step 11: Retrieve the loop data from the SLIC 49
Step 12: Reconcile the actual and expected data 49
Step 13: Send the reconciled data to the loop controller 50

Programming the SIGA-REL in the 2-SDU

Adding the SIGA-REL to the database

WARNING: This information was prepared for users who are proficient in every aspect of 2-SDU programming. Do not attempt to program the SIGA-REL if your certification is not current. Incorrect programming may result in loss of life, serious injury, or property damage.

The SIGA-REL is a single module with six serial numbers. Addresses will differ for each installation, but they must be consecutive.

Note: If you are adding other Signature Series devices to the project database, add the SIGA-REL last. Adding devices after the SIGA-REL may disrupt the addressing scheme.

The SIGA-REL has six addressable circuits. To add the SIGA-REL to the project database, you must add three SIGA-RELs. The first SIGA-REL is for the abort switch and manual release switch circuits, the second for the two release circuits, and the third for the two prerelease circuits.

Note: You cannot have more than 10 SIGA-RELs on one Signature loop.

The SIGA-REL provides only one serial number label. When you scan in the SIGA-REL, only the first two serial numbers appear in the database.

Caution: Do not use the Accept Actual function in the Signature Mapping tool. Accepted data may corrupt the database by causing it to see every device as two devices.

To add the SIGA-REL to the database:

1. Use the SDC Configuration dialog box to add three SIGA-REL modules:

   Device type = Monitor
   Model = SIGA-REL
   Personality code = 3
   Quantity = 3

2. Scan or enter the SIGA-REL serial number label in the first address slot.
3. Complete each SIGA-REL address as shown in Table 16. You don't need to enter serial numbers for all addresses. This happens in a later step.
4. Use the Object Configuration dialog box to assign labels and messages to each SIGA-REL address, as shown in Table 17.

5. Connect to the panel and use the Communication Functions dialog box to upload the Signature loop.
6. In the Signature Series mapping tool, open the Actual vs. Expected Data dialog box (F9 key).
7. For the first two SIGA-REL devices, click Commit Expected.
8. For the third SIGA-REL device, click Break Chain, select the first available address (the release circuit), and click Commit Expected.

Break chain button

9. For the fifth SIGA-REL device, click Break Chain, select the next available address (the prerelease circuit), and click Commit Expected.
10. Close all Signature Series mapping tool dialog boxes and windows.
11. Perform a Signature Series conversion and download the database to the panel.

Table 16: SIGA-REL configuration settings

Typical address [1]	Typical serial number [1]	Device type	Model	Personality code
0207	5300411525	Monitor	SIGA-REL	N/O Active Nonlatching (Class B)
0208	5300411532	Pull	SIGA-REL	N/O Alarm Latching (Class B)
0209	5300411549	DoorControl	SIGA-REL	Signal Output (Class B)
0210	5300411556	LocalTrouble	SIGA-REL	No personality
0211	5300411563	DoorControl	SIGA-REL	Signal Output (Class B)
0212	5300411570	LocalTrouble	SIGA-REL	No personality

[1] Actual addresses in your system may differ, but they must be consecutive. Serial numbers must also be consecutive up to the second-to-last digit.

Table 17: SIGA-REL labels and messages

Device type	Example address [1]	Label	Message	Model
Monitor	0207	Abort	Abort	SIGA-REL
Pull	0208	Manual	Manual	SIGA-REL
DoorControl	0209	Release_1	Release_1	SIGA-REL
None	0210	Release_2	Release_2	SIGA-REL
DoorControl	0211	Prerelease_1	Prerelease_1	SIGA-REL
None	0212	Prerelease_2	Prerelease_2	SIGA-REL

[1] These addresses illustrate that the SIGA-REL should occupy six consecutive addresses. The actual addresses in your system may differ.

Creating an abort confirmation LED

WARNING: If the abort circuit is shorted, the system interprets this as a manual abort. This would prevent release of the fire suppression agent in the event of an actual fire alarm.

To guarantee supervision of the manual abort circuit, we suggest that you program an LED to light when the abort circuit is activated. This has the benefit of providing a clear visual indication to untrained site personnel that the abort circuit has been compromised due to a short circuit.

Programming an AND group

AND groups function as counting groups. For more information about programming AND groups, see the *EST2 System Programming Manual* and the *2-SDU Help*.

Every device contained in each (SIGA-REL) AND group must include a rule with an output statement like the one in [ALARM1]. See Figure 17 for the details.

Note: To comply with NFPA 72, you must program an AND Group with at least two smoke detectors and a minimum activation count of 2. The smoke detectors must have their Primary and Alternate Verification properties set to None (verified smoke detectors are not allowed).

Reconciling the Signature map

Do not use the Accept Actual function in the Signature Series mapping tool. Accepted devices may appear as two devices in the SDC database and corrupt

it. Use the Break Chain and Commit Expected functions to reconcile the Signature map.

Writing rules for the SIGA-REL

To write the rules:

1. In the Rules Editor, write the rules shown in Figure 17.
2. Compile the rules and run the required conversions.
3. Download the new information.

Figure 17: EST2 rules for the SIGA-REL

```
[ALARM1]
ALARM SMK 'ALARM_1' : ON DOORCONTROL 'PRERELEASE_1';

[ALARM2]
ALARM SMK 'ALARM_2' : ON DOORCONTROL 'PRERELEASE_1';

[RELEASE]
DEFINE AND 'AND_GROUP1' : DELAY 10,
                          ON DOORCONTROL 'RELEASE_1';

[RESET]
DEFINE SYSRESET 'MCMN1' : OFF DOORCONTROL 'PRERELEASE_1',
                          OFF DOORCONTROL 'RELEASE_1';

[DUMP]
ALARM PULL 'MANUAL' : ON DOORCONTROL 'RELEASE_1';

[LED1]
CONFIRMATION DOORCONTROL 'PRERELEASE_1' : ON LED 'LED_1_1';

[LED2]
CONFIRMATION DOORCONTROL 'RELEASE_1' : ON LED 'LED_1_2';

[ABORT LED]
MONITOR MONITOR 'ABORT' : ON LED 'LED_1_3';
```

Caution: Do not program the Drill switch to test the SIGA-REL.

Notes

- [ALARM_1] and [ALARM_2] require the addition of two Signature Series alarm devices to the SDC Configuration. Make sure that the object labels in the rules match the labels assigned in the Object Configuration.
- [LED1] and [LED2] require the addition of an LED module to the MCM Configuration. Make sure that the labels for the LEDs match the labels assigned to them in the Object Configuration.

See “System testing” on page 52 for instructions on checking your work and testing your system.

Programming the SIGA-REL in the 3-SDU

Adding the SIGA-REL to the database

WARNING: This information was prepared for users who are proficient in every aspect of 3-SDU programming. Do not attempt to program the SIGA-REL if your certification is not current. Incorrect programming may result in loss of life, serious injury, or property damage.

The SIGA-REL is a single module with six serial numbers. Addresses will differ for each installation, but they must be consecutive.

Note: If you are adding other Signature Series devices to the project database, add the SIGA-REL last. Adding devices after the SIGA-REL may disrupt the addressing scheme.

The SIGA-REL has six addressable circuits. To add the SIGA-REL to the project database, you must add three SIGA-RELs. The first SIGA-REL is for the abort switch and manual release switch circuits, the second for the two release circuits, and the third for the two prerelease circuits.

Note: You cannot have more than 10 SIGA-RELs on one Signature loop.

The SIGA-REL provides only one serial number label. When you scan in the SIGA-REL, only the first two serial numbers appear in the database.

WARNING: Do not configure the third and fifth SIGA-REL addresses as common outputs or audio amplifiers. Any off-normal condition activates the automatic release sequence if these addresses are common outputs. The Drill switch activates the prerelease and the release circuits if they are audio amplifiers. You must select the device types and personality codes exactly as prescribed in Table 18.

To add the SIGA-REL to the database:

1. Use the Signature Series Configuration dialog box to add three SIGA-REL modules:

   Device type = Monitor
   Model = SIGA-REL
   Personality code = 3
   Quantity = 3

2. Scan or enter the SIGA-REL serial number label in the first address slot.

3. Complete each SIGA-REL address in strict accordance with Table 18. You don't need to enter serial numbers for all addresses. This happens in a later step.
4. Use the Object Configuration dialog box to assign labels and messages to each SIGA-REL address, as shown in Table 19.
5. Connect to the panel and use the Communication Functions dialog box to upload the Signature loop.
6. In the Signature Series mapping tool, open the Actual vs. Expected Data dialog box (F9 key).
7. For the first two SIGA-REL devices, click Commit Expected.
8. For the third SIGA-REL device, click Unmatched, select the first available address (the release circuit), and click Accept Actual.
9. For the fifth SIGA-REL device, click Unmatched, select the next available address (the prerelease circuit), and click Accept Actual.
10. Close all Signature Series mapping tool dialog boxes and windows.
11. Perform a Signature Series conversion and download the database to the panel.

Table 18: SIGA-REL configuration settings

Typical address [1]	Typical serial number [1]	Device type	Model	Personality code
126	5300411525	Monitor	SIGA-REL	(3) N/O Active Nonlatching (Class B)
127	5300411532	Pull	SIGA-REL	(1) N/O Alarm Latching (Class B)
128	5300411549	SupervisedOutput	SIGA-REL	(16) Signal Output (Class B)
129	5300411556	None	SIGA-REL	(0) No personality
130	5300411563	SupervisedOutput	SIGA-REL	(16) Signal Output (Class B)
131	5300411570	None	SIGA-REL	(0) No personality

[1] Actual addresses in your system may differ, but they must be consecutive. Serial numbers must also be consecutive up to the second-to-last digit.

Table 19: SIGA-REL labels and messages

Device type	Example address [1]	Label	Message	Model
Monitor	126	Abort	Abort	SIGA-REL
Pull	127	Manual	Manual	SIGA-REL

Device type	Example address [1]	Label	Message	Model
SupervisedOutput	128	Release_1	Release_1	SIGA-REL
None	129	Release_2	Release_2	SIGA-REL
SupervisedOutput	130	Prerelease_1	Prerelease_1	SIGA-REL
None	131	Prerelease_2	Prerelease_2	SIGA-REL

[1] The addresses in this table demonstrate the importance of ensuring that the SIGA-REL occupies six consecutive addresses. The actual addresses in your system may differ.

Programming an AND group

WARNING: Set the AND group activation number to 2 or greater. An activation number of 1 will cause the AND group to become an OR group, and any activation of Alarm_1 or Alarm_2 will activate the release sequence. Check only Q1 for each device in the list box labeled “Devices in Selected Group.” For Q1, only a detector in alarm will count as a device activation. If you check Q2, Q3, or Q4 the release circuit may accidentally activate for maintenance events.

AND groups function as counting groups; matrix groups function as counting zones. For more information about programming AND groups and matrix groups, see the 3-SDU Online Help.

Note: Every device contained in each (SIGA-REL) AND group must include a rule with an output statement like the one in [ALARM1]. See Figure 18 for the details.

Note: For preaction operation, set the activation number to 1. This will cause the AND group to become an OR group. Any activation of Alarm_1 or Alarm_2 will then activate the release sequence.

Note: To comply with NFPA 72, you must program an AND Group with at least two smoke detectors and a minimum activation count of 2. The smoke detectors must have their Primary and Alternate Verification properties set to None (verified smoke detectors are not allowed).

Writing rules for the SIGA-REL

To write the rules:

1. In the Rules Editor, write the rules shown in Figure 18.
2. Compile the rules and run the required conversions.
3. Download the new information.
4. See “System testing” on page 52 before you test your system.

Figure 18: EST3 rules for the SIGA-REL

```
[RESET]
RESET:
   OFF -HIGH 'PRERELEASE_1', {turn off prerelease 1}
   DLYR 10; {delay after reset}

[PRERELEASE 1]
ALARM 'ALARM_1':
   ON 'PRERELEASE_1'; {turn on prerelease 1 on alarm}

[AND GROUP RELEASE]
ALARM 'AND_GROUP':
   DLYA 10, {delay time (user setting)}
   ON SUP 'RELEASE_1'; {turn on release}

[MANUAL RELEASE]
ALARM 'MANUAL':
   ON -HIGH 'RELEASE_1'; {turn on release}

[LED1]
RLYCFG 'PRERELEASE_1':
   ON 'LED_1_1';

[LED2]
RLYCFG 'RELEASE_1':
   ON 'LED_1_2';
```

Notes

- RESET rule: On reset, the prerelease circuit is forced to deactivate, which also deactivates the release circuit. The system determines whether an alarm is still present before making the decision to activate the releasing sequence again. In this situation, the system delay (the time necessary to test and analyze alarms) overrides the rule delay. When the system is reset and the alarm restored, the SIGA-REL turns off both the prerelease and release circuits (in that order).
- PRERELEASE rule: On alarm, the PRERELEASE rules activate the prerelease circuits. These rules require the addition of alarm devices to the panel configuration. Make sure that the object labels match the labels assigned to them in the Object Configuration.
- AND GROUP RELEASE rule: When the AND_GROUP activates, the release circuit is activated after the programmed delay, as per the rule.
- MANUAL RELEASE rule: If the manual release circuit on the SIGA-REL is activated, the SIGA-REL independently activates its releasing circuits. The MANUAL RELEASE rule forces the panel output to match the SIGA-REL output.
- [LED1] and [LED2] require the addition of an LED module to the Cabinet Configuration (Modules tab, operator layer). Make sure that the labels for the LEDs match the labels assigned to them in the Object Configuration.

If your application requires use of the Drill switch to test the SIGA-REL, write a custom rule to accomplish this. See Figure 19 for an example of the rules required.

Caution: Do not program the Drill switch to test the SIGA-REL.

Figure 19: Optional rules for using the Drill switch

```
[DRILL]
DRILL:
   ON 'PRERELEASE_1'; {turn on prerelease 1}
```

See “System testing” on page 52 for instructions on checking your work and testing your system.

Programming the SIGA-REL in the QS-CU

Minimum system requirements

- A QS1 with an SLIC card and appropriately sized standby batteries
- A compatible power supply with appropriately sized standby batteries to supply 24 VDC to the SIGA-REL
- The SIGA-REL, mounted in an MFC-A enclosure
- A SIGA-CT1 module to supervise the service disconnect switch
- A SIGA-CT2 module to indicate activation of the prerelease and release relays

When you use monitor or supervisory event messages to indicate activation of the service disconnect station, prerelease relay, or release relay, you must route those messages to the panel.

Note: You cannot have more than 10 SIGA-RELs on one SLIC loop.

Step 1: Read this first

WARNING: This information was prepared for users who are proficient in every aspect of QS-CU programming. Do not attempt to program the SIGA-REL without a complete understanding of QS-CU and SIGA-REL operation. Incorrect programming may result in loss of life, serious injury, or property damage.

This application requires the operation of at least two automatic detectors to activate the fire suppression system. In order to meet NFPA 72 requirements, you must program an AND group with at least two smoke detectors and a minimum activation count of 2. The smoke detectors must have their primary and alternate verification properties set to None.

The SIGA-REL has six addressable circuits. To add the SIGA-REL to the loop controller database, you must add three SIGA-RELs. The first SIGA-REL is for the abort switch and manual release switch circuits, the second for the two release circuits, and the third for the two prerelease circuits.

Using the QS-CU, perform the instructions that follow in order from beginning to end.

As a safety precaution, disconnect releasing devices from SIGA-REL TB4 before downloading setup data to the loop controller.

The SIGA-REL provides only one serial number label. When you scan in the SIGA-REL, only the first two serial numbers appear in the database.

Step 2: Add the abort and manual release switch circuits

Note: Enter the information exactly as shown to ensure that you program the application according to the manufacturer's specifications.

1. Click Configure, and then click Cabinets.
2. Select the SLIC connected to the SIGA-REL, and then click Configure.
3. Click the Modules tab, and then set the Quantity box to 1.
4. Enter the following information:

   First address
   Device type: Monitor
   Model: REL
   Personality: (3) Active B
   Message text: SIGA-REL1 A001 and ABORT SW

   Second address
   Device type: Pull
   Personality: (1) Alarm B
   Message text: SIGA-REL1 A002 and MAN RELEASE
5. Click Add.

Step 3: Add the two releasing circuits

1. Set the Quantity box to 1.

2. Enter the following information:

   First address
   Device type: Output
   Model: REL
   Personality: (16) Output B
   Message text: SIGA-REL1 A003 and RELEASE 1 & 2

   Second address
   Device type: Monitor
   Personality: (0) None
   Message text: SIGA-REL1 A004 and NOT USED

3. Click Add.

Step 4: Add the two prerelease circuits

1. Set the Quantity box to 1.
2. Enter the following information:

   First address
   Device type: Output
   Model: REL
   Personality: (16) Output B
   Message text: SIGA-REL1 A005 and PRERELEASE 1 & 2

   Second address
   Device type: Monitor
   Personality: (0) None
   Message text: SIGA-REL1 A006 and NOT USED

3. Click Add.

Table 20 shows how your entries in the Modules table should look. Your addresses may be different.

Table 20: SIGA-REL configuration settings

Address	Serial number	Device type	Model	Text 1	Text 2	Personality
126		Monitor	REL	SIGA-REL1 A001	ABORT SW	(3) Active B
127		Pull	REL	SIGA-REL1 A002	MAN RELEASE	(1) Alarm B
128		Output	REL	SIGA-REL1 A003	RELEASE 1 & 2	(16) Output B

Address	Serial number	Device type	Model	Text 1	Text 2	Personality
129		Monitor	REL	SIGA-REL1 A004	NOT USED	(0) None
130		Output	REL	SIGA-REL1 A005	PRERELEASE 1 & 2	(16) Output B
131		Monitor	REL	SIGA-REL1 A006	NOT USED	(0) None

Step 5: Create a prerelease response

In this step, you create a response that activates the prerelease circuits when any one detector in the protected area signals an alarm.

1. Click Configure > Correlations.
2. Click the Zones tab, and then click Add Zones.
3. Click the Members tab, and then click Add Device.
4. Select only the devices required to activate the SIGA-REL prerelease circuits, and then click OK.
5. Click the Responses tab, click the Response Type arrow, and then select Active.

Caution: Do not include the releasing circuits (RELEASE 1 & 2) in this response.

6. Click Outputs, select the device labeled SIGA-REL1 A005 PRERELEASE 1 & 2, and then click OK.

   Make sure you select the PRERELEASE device, not the RELEASE device.

Step 6: Create an AND group release response

Here, you create a release response that activates the release circuits when two or more detectors in the protected area signal an alarm.

Note: To comply with NFPA 72, you must program an AND Group with at least two smoke detectors and a minimum activation count of 2. The smoke detectors must have their Primary and Alternate Verification properties set to None (verified smoke detectors are not allowed).

1. Click the AND Groups tab, and then click Add AND Group.
2. Set the Activation Count box for 2.
3. Click the Members tab, and then click Add Device.

4. Select only the detectors required to activate the SIGA-REL release circuits then click OK.
5. Click the Responses tab, click the Response Type arrow, and then select Active.
6. Click Delays.
7. In the Delay On list, click Activation and Restoration.
8. Set the Seconds box to 10.
9. Click Outputs, select the device labeled SIGA-REL1 A003 RELEASE 1 & 2, and then click OK.

Step 7: Create a manual release response

In this step, you create a manual release response that activates the release circuits when someone presses the manual release switch. Add the prerelease response, create the delay, and then add the release response in that order.

1. Click the Devices tab, and then select the circuit labeled SIGA-REL A002 MAN RELEASE.
2. Click the Responses tab, click the Response Type arrow, and then select Active.
3. Click Outputs, select the device labeled SIGA-REL1 A005 PRERELEASE 1 & 2, and then click OK.
4. Click Delays and set the delay options as follows:

   Delay On: Activation and Restoration
   Seconds: 0
5. Click Outputs, select the device labeled SIGA-REL1 A003 RELEASE 1 & 2, and then click OK.

Note: The delay is required so that the prerelease and release responses occur in the correct order. Prerelease must come before release.

Step 8: Supervise the service disconnect switch

If your application requires supervision of the service disconnect station, install and wire components according to Figure 13. A SIGA-CT1 module supervises the RELA-SRV-1 switch. Configure the SIGA-CT1 as follows:

Device Type: Supervisory
Personality: (3) Active B
Text 1: SIGA-REL1 RELEASE 1

Text 2: DISCONNECT SW

No further programming is necessary.

Step 9: Indicate active prerelease and release circuits

Two PAM-1 control relays and a SIGA-CT2 module are used to indicate activation of the prerelease and release relays.

Install and wire the components according to Figure 14. In this case, the 1st Device represents terminals 7 and 8, the release relay. The 2nd Device represents terminals 5 and 6, the prerelease relay.

Configure the SIGA-CT2 module as follows:

1st Device represents

1st Device Type: Monitor
1st Personality:(3) Active B
1st Text 1: REL1_RELEASE
1st Text 2: CKT_ACTIVE

2nd Device Type: Monitor
2nd Personality:(3) Active B
2nd Text 1: REL1_PREREL
2nd Text 2: CKT_ACTIVE

When a circuit is activated, the SIGA-CT2 module activates a monitor event. The corresponding event message identifies which circuit was activated. No further programming is necessary.

Step 10: Create a drill prerelease response

Here, you create a response that activates the prerelease circuits when someone presses the Drill switch.

Note: Create this response only if required. Pressing Drill will activate the prerelease circuits, but pressing Drill a second time will not restore the prerelease circuits. You must press Reset to silence the prerelease circuits.

1. Click Configure > Correlations.
2. Click the Devices tab, and then select the Show Pseudo Points check box.
3. Select the circuit labeled Drill (address 007).
4. Click the Responses tab, click the Response Type arrow, and then select Active.

Caution: Do not include the releasing circuits (RELEASE 1 & 2) in this response.

5. Click Outputs, select the device labeled SIGA-REL1 A005 PRERELEASE 1 & 2, and then click OK.

Step 11: Retrieve the loop data from the SLIC

1. Click Configure, and then click Cabinets.
2. Select the SLIC connected to the SIGA-REL, and then click Configure.
3. Set the Communications Port setting for the COM port used to connect the service computer to the control panel.
4. Click Retrieve Signature Data.
5. After the upload has finished, click OK.

Step 12: Reconcile the actual and expected data

Caution: Clicking Accept Actual enters the selected device into the database with its current programmed parameters. This corrupts the database if you have already entered the device.

1. Click the Mapping tab, and then click Model.
2. Look for a string of at least six RELs marked with red backgrounds and double-click the first REL in the string.
3. If the serial number displayed in the Module Properties dialog is not the same as the serial number shown on the bar code attached to the SIGA-REL, click Close, and then double-click the next REL in the string.
4. If the serial numbers are the same:

   Click Select Expected.

   In the Module Selection dialog, select the row that has the REL with the Monitor device type and marked SIGA-REL1 A001 Abort SW, and then click OK.

   Click Close.
5. Select the next REL, and then click Select Expected.

   In the Module Selection dialog, select the row that has the REL with the Output device type and marked SIGA-REL1 A003 Release 1 & 2, and then click OK.

   Click Close.

6. Select the next REL, and then click Select Expected.

   In the Module Selection dialog, select the row that has the REL with the Output device type and marked SIGA-REL1 A005 Prerelease 1 & 2, and then click OK.

   Click Close.

Step 13: Send the reconciled data to the loop controller

Click the Controller tab, and then click Send Signature Data.

See “System testing” on page 52 for instructions on checking your work and testing your system.

Chapter 4
Testing and troubleshooting

Summary

This chapter contains testing instructions for system programmers. Read the testing topics that apply to your fire alarm system.

Content

Code requirements for testing 52
System testing 52
- Checking your work 52
- Testing EST2 systems 53
- Testing EST3 systems 53
- Testing QuickStart systems 53
- Connecting the releasing solenoids 54

SIGA-REL fault messages on EST2 panels 55
SIGA-REL fault messages on EST3 panels 56
SIGA-REL fault messages on QuickStart panels 57

Code requirements for testing

It is important that you understand and are familiar with the applicable code requirements for system testing. Perhaps the most important code is found in NFPA 72 *National Fire Alarm Code*, Chapter 7, “Inspection, Testing, and Maintenance.” Here are excerpts from this standard.

7-1.5.1: Testing personnel shall be qualified and experienced in the specific arrangement and operation of suppression systems and releasing functions and cognizant of the hazards associated with inadvertent system discharge.

7-1.5.2: Occupant notification shall be required whenever a fire alarm system configured for releasing service is being serviced or tested.

7-1.5.3: Discharge testing of suppression systems shall not be required by this code. Suppression systems shall be secured from inadvertent actuation, including disconnection of releasing solenoids or electric actuators, closing of valves, other actions, or combinations thereof, for the specific system, for the duration of the fire alarm system testing.

7-1.5.4: Testing shall include verification that the releasing circuits and components energized or actuated by the fire alarm system are electrically supervised and operate as intended on alarm.

7-1.5.5: Suppression systems and releasing components shall be returned to their functional operating condition upon completion of system testing.

Further, both NFPA 2001 *Standard on Clean Agent Fire Extinguishing Systems*, which covers FM-200 releasing systems, and NFPA 12A *Halon 1301 Fire Extinguishing Systems*, require a manual disconnect mechanism for use when testing the fire system.

System testing

Checking your work

Caution: Some events after a download or an upload may destabilize the system enough to activate the release circuits. Do not connect the releasing solenoids until system testing is complete and the system is stable.

Check your installation and programming work before you connect the releasing solenoids.

Verify that the ‘Prerelease_1’ and ‘Prerelease_2’ LEDs extinguish after a panel reset. If not, a second Reset switch activation may be necessary.

Avoid using the Drill switch to test the SIGA-REL. If you activate a Drill, press the Reset switch to deactivate it. The deactivation of the Drill switch, alone, does not silence the prerelease tones.

Testing EST2 systems

Allow the system sufficient time to stabilize after the initial startup or download. Before you test the system, access the SDC Status tool in the 2-SDU. Do not test the system if the status LEDs indicate activity that is in progress or pending. This includes:

- Mapping
- Device new starts
- Resets
- Restarts

Testing EST3 systems

Allow the system sufficient time to stabilize after the initial startup or download. Before you test the system, check the Current Status tab of the Signature Series Status / Diagnostics tool in the 3-SDU. Do not test the system if the status LEDs indicate activity that is in progress or pending. This includes:

- Mapping
- Device new starts
- Resets
- Restarts

In the 3-SDU, you can test the system while the Device Supervision LED is on. The Device Supervision LED may remain on longer for large loops.

Testing QuickStart systems

Allow the system sufficient time to stabilize after the initial startup or download. Before you test the system, check the Status tab of the Signature Series Configuration Form in the QS-CU. Do not test the system if the counters or Current Status messages indicate activity that is in progress or pending.

Connecting the releasing solenoids

Caution: Do not connect the releasing solenoids until the system has been programmed and tested, and the Signature loop controller and SIGA-REL have reached their normal state. Failure to follow the instructions given below can result in unexpected release of the fire suppression agent.

Follow these steps before you connect the releasing solenoids.

Before you connect the releasing solenoids:

1. After connecting all devices to the Signature data line (including the SIGA-REL), verify that you have downloaded the database to the correct panel and Signature loop controller.
2. Using your SDU or CU, browse to the Signature Series status tool. Verify that the loop is in its normal, inactive state.

   In the 2-SDU choose Tools > Signature Series > Status, then select the Current Status tab. All LEDs should be off.

   In the 3-SDU choose Tools > Signature Series > Status / Diagnostics, then select the Current Status tab. All LEDs should be off. Note that the Device Supervision LED may take up to 20 minutes to extinguish, depending on the number of devices connected to the Signature loop.

   In the QS-CU choose Configure > Cabinet, then select the Cards tab. Select the Signature loop controller card, then choose Configure to open the Signature Series Configuration Form. Select the Status tab. In the Mapping Progress group, the Expected and Actual numbers should match.
3. Check the DS1, DS3, and DS7 LEDs on the SIGA-REL to make sure that it is not active. There should be no red or yellow LEDs. Check the output terminals with a voltmeter prior to connecting the releasing solenoids. The voltage should be 10 VDC or less.

   When all yellow and red LEDs are off and all output voltages are 10 VDC or less, it is safe to connect the releasing solenoids to the RELA-EOL relays.

Note: When testing the system, make sure that it is safe to do so and that testing will not result in the release of agent.

SIGA-REL fault messages on EST2 panels

WARNING: Disconnect all wiring on TB4 of the SIGA-REL (release circuits 1 and 2) when servicing the system. Disabling points does not prevent activation of the release circuits. Failure to follow these instructions may result in loss of life, serious injury, or property damage.

After the successful completion of the programming process, the fire alarm control panel resets itself. Upon reset, device supervision may cause the panel to generate a Dev/Line fault for each SIGA-REL circuit. This is a normal indication, and it should go away within minutes. Table 21 lists the indications you may see for the SIGA-REL on the 2-LCD.

Table 21: SIGA-REL fault messages

Device	Condition	LED	2-LCD message
Abort	Short	Monitor	None, unless there is another event
	Open	Trouble	Open Fault Abort [1]
Manual	Short	Alarm	1st Fire Alarm Manual [1]
	Open	Trouble	Open Fault Manual [1]
Prerelease_1	Short	Trouble	Short Fault Prerelease_1 [1]
	Open	Trouble	Open Fault Prerelease_1 [1]
Prerelease_2	Short	Trouble	Dev/Line Flt Prerelease_2 [1]
	Open	Trouble	Open Fault Prerelease_2 [1]
Abort Manual Prerelease_1 Prerelease_2 Release_1 Release_2	No riser	Trouble	Dev/Line Flt Device (Abort, Manual, Prerelease_1, Prerelease_2, Release_1, or Release_2) [1]
Release_1	Short	Trouble	Short Fault Release_1 [1]
	Open	Trouble	Open Fault Release_1 [1]
Release_2	Short	Trouble	Dev/Line Flt Release_2 [1]

Device	Condition	LED	2-LCD message
	Open	Trouble	Open Fault Release_2 [1]

[1] Message requires user programming

SIGA-REL fault messages on EST3 panels

WARNING: Disconnect all wiring on TB4 of the SIGA-REL (release circuits 1 and 2) when servicing the system. Disabling points does not prevent activation of the release circuits. Failure to follow these instructions may result in loss of life, serious injury, or property damage.

When programming is complete, the fire alarm control panel resets itself, reconstruct the line data card, and map it. Upon reset, device supervision may cause the panel to generate a common trouble active for each SIGA-REL circuit. This is a normal indication, and it should go away within minutes. Table 22 lists the indications you may see for the SIGA-REL on the 3-LCD.

Table 22: SIGA-REL fault messages

Device	Condition	LED	3-LCD message
Abort	Short	Monitor	MONITOR ACT (Abort)
	Open	Trouble	COMMON TRBL ACT Abort [1] Expanded message: TROUBLE OPEN ACT
Manual	Short	Alarm	PULL STATION ACT Manual [1] Expanded message: TROUBLE SHRT ACT
	Open	Trouble	COMMON TRBL ACT Manual [1] Expanded message: TROUBLE OPEN ACT
Prerelease_1	Short	Trouble	COMMON TRBL ACT Prerelease_1 [1] Expanded message: TROUBLE SHRT ACT
	Open	Trouble	COMMON TRBL ACT Prerelease_1 [1] Expanded message: TROUBLE OPEN ACT
Prerelease_2	Short	Trouble	COMMON TRBL ACT Prerelease_2 [1] Expanded message: TROUBLE SHRT ACT

Device	Condition	LED	3-LCD message
	Open	Trouble	COMMON TRBL ACT Prerelease_2 [1] Expanded message: TROUBLE OPEN ACT
Abort Manual Prerelease_1 Prerelease_2 Release_1 Release_2	No riser	Trouble	COMMON TRBL ACT Device (Abort, Manual, Prerelease_1, Prerelease_2, Release_1, or Release_2) [1] Expanded message: INTRNL TRBL ACT
Release_1	Short	Trouble	COMMON TRBL ACT Release_1 [1] Expanded message: TROUBLE SHRT ACT
	Open	Trouble	COMMON TRBL ACT Release_1 [1] Expanded message: TROUBLE OPEN ACT
Release_2	Short	Trouble	COMMON TRBL ACT Release_2 [1] Expanded message: TROUBLE SHRT ACT
	Open	Trouble	COMMON TRBL ACT Release_2 [1] Expanded message: TROUBLE OPEN ACT

[1] Message requires user programming

SIGA-REL fault messages on QuickStart panels

WARNING: Disconnect all wiring on TB4 of the SIGA-REL (release circuits 1 and 2) when servicing the system. Disabling points does not prevent activation of the release circuits. Failure to follow these instructions may result in loss of life, serious injury, or property damage.

When programming is complete, the control panel resets itself and maps the line controller card. During the reset, device supervision may cause the panel to generate a common trouble message for each SIGA-REL circuit. This is a normal indication, and should clear within minutes. Table 23 lists other messages related to the SIGA-REL.

Table 23: SIGA-REL fault messages

Device	Condition	LED	LCD message
Abort	Short	Monitor	Monitor (Abort)
	Open	Trouble	Trouble ABORT SW [1] Help message: TROUBLE OPEN
Manual	Short	Alarm	Alarm Active MAN RELEASE [1]
	Open	Trouble	Trouble MAN RELEASE [1] Help message: TROUBLE OPEN
Prerelease_1	Short	Trouble	Trouble PRERELEASE 1 [1] Help message: TROUBLE SHRT
	Open	Trouble	Trouble PRERELEASE 1 [1] Help message: TROUBLE OPEN
Prerelease_2	Short	Trouble	Trouble PRERELEASE 2 [1] Help message: TROUBLE SHRT
	Open	Trouble	Trouble PRERELEASE 2 [1] Help message: TROUBLE OPEN
Abort Manual Prerelease_1 Prerelease_2 Release_1 Release_2	No riser	Trouble	Trouble Device (ABORT, MAN RELEASE, RELEASE 1, RELEASE 2, PRERELEASE 1 PRERELEASE 2) [1] Help message: INTRNL TBL
Release_1	Short	Trouble	Trouble RELEASE 1 [1] Help message: TROUBLE SHRT
	Open	Trouble	Trouble RELEASE 1 [1] Help message: TROUBLE OPEN
Release_2	Short	Trouble	Trouble RELEASE 2 [1] Help message: TROUBLE SHRT
	Open	Trouble	Trouble RELEASE 2 [1] Help message: TROUBLE OPEN

[1] Message requires user programming

Index

2

276A-REL manual release station, 8
278A-REL manual release station, 8
2-PPS(/220) power supply, 7
2-PPS/6A(-220) power supply, 7
2-SDU
  abort circuit, 35, 36
  Accept Actual command, 36, 37
  adding a SIGA-REL, 35
  configuration settings for SIGA-REL, 36
  Drill switch, 38
  programming, 35
  rules, 38
  Signature data, 36, 37

3

3-BPS/M(-230) power supply, 7
3-PPS/M(-230) power supply, 7
3-SDU
  abort circuit, 39, 40
  adding a SIGA-REL, 39
  configuration settings for SIGA-REL, 40
  Drill switch, 43
  programming, 39
  rules, 41
  Signature data, 40

A

abort circuit
  2-SDU, 35, 36
  3-SDU, 39, 40
  QS-CU, 44
  specifications, 10
  wiring diagram, 26
abort confirmation LED, 37
abort delay time, 23
abort modes, 22, 23
abort stations
  annunciation, 11
abort stations (continued)
  automatic extinguishing systems, 14
  compatible, 8
  compliance requirements, 11
  sprinkler systems, 13
aborting a manual release, 18
Accept Actual command
  2-SDU projects, 36, 37
  QS-CU projects, 49
activation numbers
  3-SDU projects, 41
  QS-CU projects, 44, 47
actual and expected data. See reconciling the Signature map
adding a SIGA-REL
  2-SDU projects, 35
  3-SDU projects, 39
  QS-CU projects, 44
adding circuits to QS-CU projects, 44
addresses
  2-SDU, 36
  3-SDU, 40
  QS-CU, 46
agencies, listing, iii, 9
AND groups
  automatic release sequence, 16
  configuring in 2-SDU, 37
  configuring in 3-SDU, 41
  configuring in QS-CU, 44, 47
  preaction operation in 3-SDU, 41
  release response in QS-CU, 46
application block diagrams, 12
ASCO solenoid release valves, 9
audible NAC circuit, 26
automatic delay time, 23
automatic delay timer, 17
automatic fire extinguishing systems, 5, 14
automatic release sequence, 16

B

BPS10A(/230) power supply, 7

BPS6A(/230) power supply, 7

C

checking your work, 54
circuits
    labeling in 2-SDU, 35
    labeling in 3-SDU, 39
    prerelease, 13
    prerelease wiring specifications, 11
    QS-CU, 44
    release, 13
    release wiring specifications, 11
    SIGA-REL overview, 3
    specifications, 10
    wiring diagram, 26
code requirements for testing, 54
compatible abort stations, 8
compatible manual release stations, 8
compatible notification appliances, 7
compatible panels and devices, 6
compatible power supplies, 7
compatible releasing solenoid relays, 8
compatible releasing solenoids, 9
compatible service disconnect stations, 8
compatible software, 7
compliance requirements, 11
computer room application, 14
configuring abort delay time, 23
configuring abort mode, 22, 23
configuring AND groups
    2-SDU, 37
    3-SDU, 41
    QS-CU, 44, 47
configuring automatic delay time, 23
configuring DIP switches, 22
configuring horns, 11
configuring manual delay time, 23
connecting releasing solenoids, 25, 54, 56
control panel placard, 29
counting zones. See matrix groups
creating an abort confirmation LED, 37
creating responses in QS-CU projects, 46
cross-zones. See AND groups

D

delay times, 22
deluge sprinkler systems, 4, 13
device types
    2-SDU, 36
    3-SDU, 40
    QS-CU, 46
DIP switch settings, 22
disabled points, 44
disconnecting releasing solenoids, 44
documentation, related, iii
drill prerelease response in QS-CU, 48
Drill switch
    2-SDU, 38
    3-SDU, 43
    QS-CU, 48, 49
    testing problems, 55
dry pilot sprinkler line, 5

E

electric fire detection systems, 5
enclosures. See also panels
    mounting in other, 20
environmental condition specifications, 11
EOL resistors, 26
EST2 documentation, iii
EST2 testing, 55
EST3 documentation, iii
EST3 testing, 55
European codes and standards, iv

F

fault messages
    EST2 panels, 57
    EST3 panels, 58
    QuickStart panels, 59
fire suppression agents, NFPA standards, 5
fire suppression application, 14
fire suppression systems, 4
FM Approved solenoid release valves, 9
FM codes and standards, iv
FM requirements
    automatic fire extinguishing systems, 6
    deluge and preaction systems, 4
footprint of SIGA-REL, 21

H

holes, mounting, 21
horns, 11
hydraulic rate-of-rise, 5

I

installation codes and standards, iii

L

labels
    2-SDU, 36
    3-SDU, 40

LEDs
abort confirmation, 37
SIGA-REL, 24
listing agencies, iii, 9

M

manual delay time, 23
manual delay timer, 18
manual release circuit, 10, 26, 44
manual release response in QS-CU, 47
manual release sequence, 18
manual release stations
automatic extinguishing systems, 14
compatible, 8
compliance requirements, 11
sprinkler systems, 13
manual reset at panel
automatic release sequence, 17
manual release sequence, 18
matrix groups
2-SDU, 16
3-SDU, 41
automatic release sequence, 16
maximum number of SIGA-RELs
EST2, 35
EST3, 39
QuickStart, 43
messages
2-SDU, 36
3-SDU, 40
QS-CU, 46
MFC-A, 20
minimum QuickStart system requirements, 43
models
2-SDU, 36
3-SDU, 40
QS-CU, 46
mounting holes, 21
mounting the SIGA-REL, 20

N

NFPA 2001
service disconnect stations, 54
NFPA 72 requirements
QS-CU, 44, 47
testing, 54
NFPA codes and standards, iv
NFPA standards for fire suppression agents, 5
notice placards, 29
notification appliances, 7, 13

O

object configuration
2-SDU, 35
3-SDU, 39
operation of the SIGA-REL
automatic release sequence, 16
manual release sequence, 18

P

panels, compatible, 6
personality codes
2-SDU, 36
3-SDU, 40
QS-CU, 46
placards, 29
pneumatic rate-of-rise, 5
power riser
specifications, 10
wiring length table, 11
power supplies
compatible, 7
wiring lengths, 11
power supply circuit, 26
preaction operation in 3-SDU, 41
preaction sprinkler systems, 4, 5, 13
prerelease circuit, 26
prerelease circuit active indication, 25, 48
prerelease circuits, 13
QS-CU, 45
silencing, 48
specifications, 10
wiring lengths, 11
prerelease horn circuit, 17, 18
prerelease NACs, 55
prerelease response in QS-CU, 46
prerelease strobe circuit, 17, 18
programming
2-SDU, 35
3-SDU, 39
QS-CU, 43

Q

QS-CU
abort circuit, 44
Accept Actual command, 49
actual and expected data, 49
adding a SIGA-REL, 44
AND group release response, 46
configuration settings for SIGA-REL, 46
drill prerelease response, 48
Drill switch, 49
manual release circuit, 44

QS-CU (continued)
manual release response, 47
minimum system requirements, 43
prerelease response, 46
programming, 43
Signature data, 49, 50
QuickStart
documentation, iii
power supply, 7
testing, 55

R

reading LEDs, 24
reconciling the Signature map
2-SDU, 37
3-SDU, 39
QS-CU, 49
RELA-ABT manual abort station, 8
RELA-EOL relays, 8, 13
RELA-SRV-1 service disconnect switch, 8
related documents, iii
release circuit active indication, 25, 48
release circuits
automatic release sequence, 17
disconnecting in EST2, 57
disconnecting in EST3, 58
disconnecting in QuickStart, 59
manual release sequence, 18
on the SIGA-REL, 13
QS-CU, 45
specifications, 10
wiring diagram, 26
wiring lengths, 11
release sequences, 16
releasing circuits. See release circuits
releasing solenoids
compatible, 9
connecting, 25, 54, 56
disconnecting, 44
requirements. See also entries by agency
automatic fire extinguishing systems, 6
compliance, 11
deluge systems, 4
preaction systems, 4
QuickStart systems, 43
testing, 54
reset at panel
automatic release sequence, 17
manual release sequence, 18
resistance, wiring, 11
resistors. See EOL resistors
responses, creating in QS-CU projects, 46
rules
2-SDU, 38
3-SDU, 41

S

separate areas application, 14
serial numbers
2-SDU, 36
3-SDU, 40
QS-CU, 46
SIGA-REL, 35, 39
service disconnect stations
annunciation, 11
automatic extinguishing systems, 14
compatible, 8
compliance requirements, 11
NFPA 2001, 54
sprinkler systems, 13
service disconnect supervision, 48
servicing
EST2, 57
EST3, 58
QuickStart, 59
setting abort delay time, 23
setting abort mode, 22, 23
setting automatic delay time, 23
setting DIP switches, 22
setting manual delay time, 23
SIGA-REL
adding to 2-SDU projects, 35
adding to 3-SDU projects, 39
adding to QS-CU projects, 44
automatic release sequence, 16
footprint, 21
LEDs, 24
manual release sequence, 18
mounting, 20
overview, 3
placard, 29
preaction operation, 41
prerelease circuits, 13
release circuits, 13
release sequences, 16
serial numbers, 35, 39, 49
specifications, 10
wiring, 25
wiring diagram, 26
SIGA-REL configuration settings
2-SDU, 36
3-SDU, 40
QS-CU, 46
SIGA-REL fault messages
EST2, 57

SIGA-REL fault messages (continued)
EST3, 58
QuickStart, 59
SIGA-REL labels
2-SDU, 36
3-SDU, 40
QS-CU, 46
Signature data
2-SDU, 36, 37
3-SDU, 40
QS-CU, 49, 50
Signature data circuit, 11, 26
Signature map
2-SDU, 37
3-SDU, 39
QS-CU, 49
Signature Series documentation, iii
silencing prerelease NACs, 48, 55
Skinner solenoid release valves, 9
SLIC card, 43
software, compatible, 7
solenoid relays, compatible, 8
solenoid release valves, approved, 9
speaker documentation, iii
specifications, 10
sprinkler systems, 4, 13
strobe documentation, iii
system overview, 12
system testing, 54

T

TB1, 11
TB2, 10
TB3-1 and TB3-2, 10
TB3-3 and TB3-4, 10
TB4, 10
TB5, 10
testing
checking your work, 54
connecting releasing solenoids, 54
EST2, 55
EST3, 55
NFPA 72 requirements, 54
QuickStart, 55
system testing, 54
troubleshooting
EST2, 57
EST3, 58
QS-CU, 47
QuickStart, 59

U

UL 864 requirements, 11
UL codes and standards, iv
ULC codes and standards, iv

V

Viking solenoid release valves, 9
visible NAC circuit, 26

W

warning notice placards, 29
wet pilot sprinkler line, 5
wire lengths, 11
wire separation, 20
wiring diagram, 26
wiring the SIGA-REL, 25
writing rules
2-SDU, 38
3-SDU, 41

Z

zone relay
compliance requirements, 11
output circuit, 26
output specifications, 10
timing, 17

BARNARD EJMT TEAM
EISENHOWER/JOHNSON MEMORIAL TUNNEL
FIXED FIRE SUPPRESSION SYSTEM
DESIGN BUILD PROJECT
Project No. C0703-360
Subaccount 17810
RECORD DRAWINGS - 2015-11-16
DRAWN BY: B.T.L.
CHECKED BY: A.E.J.P.
REVISIONS
Num
Description
Date
PRE-ALARM
DEVICE WIRING DETAILS
Drawing Number
FA6.12
RELA-EOL
POLARIZED END OF LINE
(LOCATED IN IVE CABINET)
END OF LINE
47K RESISTOR
24 VDC SOLENOID
LOCATED IN
IVE CABINET)
RELA-SRV-1
SERVICE
DISCONNECT
SWITCH
N.C.
FPC CABINET
TERMINAL
BLOCK
SIGA-MCR
SIGA-MCR
VALVE (OFF)
CONTROL RELAY
(LOCATED IN SIGA-IJ06R
IN FPC CABINET)
SIGA-MCR
SIGA-MCR
VALVE (ON)
CONTROL RELAY
(LOCATED IN SIGA-IJ06R
IN FPC CABINET)
END OF LINE
47K RESISTOR
24 VDC IN
24 VDC OUT
END OF LINE
47K RESISTORS
SIGA-REL
RELEASING MODULE
SLC LOOP IN
SLC LOOP IN
SIGA-REL
DELUGE VALVE
RELEASING MODULE
(LOCATED IN FPC CABINET)
* VERIFY WIRING WITH MANUFACTURER'S INSTALLATION CUT SHEET
1
TYPICAL DELUGE VALVE RELEASING CIRCUIT WIRING
SCALE: NOT TO SCALE
NORMALLY
OPEN DEVICE
N.O.
END OF LINE
47K RESISTOR
TYPICAL
SIGA-MCT2
SLC
LOOP IN
SLC LOOP IN
* VERIFY WIRING WITH MANUFACTURER'S INSTALLATION CUT SHEET
2
TYPICAL SIGA-IJ06 WITH (6) SIGA-MCT2 WIRING
SCALE: NOT TO SCALE
IF THIS SHEET IS NOT 22"X34" IT IS NOT PLOTTED TO SCALE

Remote Booster Power Supply Technical Reference Manual

P/N 3100485-EN • REV 04 • ISS 28AUG12

Copyright © 2012 UTC Fire & Security. All rights reserved.

Trademarks and patents The Remote Booster Power Supply name and logo are trademarks of UTC Fire & Security.

Other trade names used in this document may be trademarks or registered trademarks of the manufacturers or vendors of the respective products.

Manufacturer Edwards, A Division of UTC Fire & Security
Americas Corporation, Inc.
8985 Town Center Parkway, Bradenton, FL 34202, USA

Certification CE

FCC compliance **Class A:** This equipment has been tested and found to comply with the limits for a Class A digital device, pursuant to part 15 of the FCC Rules. These limits are designed to provide reasonable protection against harmful interference when the equipment is operated in a commercial environment. This equipment generates, uses, and can radiate radio frequency energy and, if not installed and used in accordance with the instruction manual, may cause harmful interference to radio communications. Operation of this equipment in a residential area is likely to cause harmful interference in which case the user will be required to correct the interference at his own expense.

FDNY NYC Fire Department Certificate of Approval: MEA 476-91-E XIII

European Union directives **1999/5/EC (R&TTE directive):** Hereby, UTC Fire & Security declares that this device is in compliance with the essential requirements and other relevant provisions of Directive 1999/5/EC.

2002/96/EC (WEEE directive): Products marked with this symbol cannot be disposed of as unsorted municipal waste in the European Union. For proper recycling, return this product to your local supplier upon the purchase of equivalent new equipment, or dispose of it at designated collection points. For more information see: www.recyclethis.info.

2006/66/EC (battery directive): This product contains a battery that cannot be disposed of as unsorted municipal waste in the European Union. See the product documentation for specific battery information. The battery is marked with this symbol, which may include lettering to indicate cadmium (Cd), lead (Pb), or mercury (Hg). For proper recycling, return the battery to your supplier or to a designated collection point. For more information see: www.recyclethis.info.

Contact information For contact information, see www.utcfireandsecurity.com.

Content

Important information iii
Limitation of liability iii
Remote Booster Power Supply FCC compliance iv

Introduction 1
Models covered 1
Compatibility 1

Installation procedure checklist 2

Getting started 3
Description 3
Component descriptions 4
Specifications 5
LED indicators 6

Installing the enclosure 7

Installing option modules in the enclosure 8

Installing the circuit board in the enclosure 10

Setting the jumpers 12
NAC Class A or Class B (JP1 and JP2) 12
Ground fault enable (JP3) 12
Battery charging (JP4) 13

UL 864 programming requirements 14

Setting the DIP switches 15
Sense 1 and 2 operation (SW1-1 to 3) 15
Synchronization control (SW1-4) 16
NAC circuit operation (SW1-5 to 8 and SW2-1 to 4) 17
Genesis mode for continuous NACs (SW2-5) 19
AC power loss reporting (SW2-6) 19
Auxiliary control during AC power loss (SW2-7) 19
Class A or B NAC configuration (SW2-8) 20

Wire routing 21

Connecting the field wiring 22
AC power wiring 22
Battery wiring 22
NAC Class B wiring 24
NAC Class A wiring 25
Sense circuit wiring 26
AUX power wiring 26
Common trouble relay wiring 27

NAC wiring using CC1(S) modules 29

Installing the 3-TAMP tamper switch 34

Battery calculation worksheet 35

Notification appliance circuit calculations 37
Introduction 37
What you'll need 37
Worksheet method 39
Equation method 40

Understanding BPS synchronization 43
Connection of booster power supplies 43
Synchronization of visible outputs 44
Synchronization of visible and audible outputs 44

Applications 46
Key 46
Genesis circuit notification 47
Conventional visible and audible circuit notification 48
Conventional visible and audible circuit to Genesis notification 49
Conventional audible or visible circuit to Genesis notification 50
Genesis visible circuit and conventional audible circuit to Genesis notification 51
Conventional split mode circuit with fault tolerance notification 52
Genesis split mode circuit with fault tolerance notification 53
CDR-3 Coder to Genesis notification 54
CDR-3 Coder to conventional notification 55
CDR-3 Coder to Genesis visibles and conventional audibles 56
Access control power supply 57

Important information

Limitation of liability

To the maximum extent permitted by applicable law, in no event will UTCFS be liable for any lost profits or business opportunities, loss of use, business interruption, loss of data, or any other indirect, special, incidental, or consequential damages under any theory of liability, whether based in contract, tort, negligence, product liability, or otherwise. Because some jurisdictions do not allow the exclusion or limitation of liability for consequential or incidental damages the preceding limitation may not apply to you. In any event the total liability of UTCFS shall not exceed the purchase price of the product. The foregoing limitation will apply to the maximum extent permitted by applicable law, regardless of whether UTCFS has been advised of the possibility of such damages and regardless of whether any remedy fails of its essential purpose.

Installation in accordance with this manual, applicable codes, and the instructions of the authority having jurisdiction is mandatory.

While every precaution has been taken during the preparation of this manual to ensure the accuracy of its contents, UTCFS assumes no responsibility for errors or omissions.

Advisory messages

Advisory messages alert you to conditions or practices that can cause unwanted results. The advisory messages used in this document are shown and described below.

WARNING: Warning messages advise you of hazards that could result in injury or loss of life. They tell you which actions to take or to avoid in order to prevent the injury or loss of life.

Caution: Caution messages advise you of possible equipment damage. They tell you which actions to take or to avoid in order to prevent the damage.

Note: Note messages advise you of the possible loss of time or effort. They describe how to avoid the loss. Notes are also used to point out important information that you should read.

Remote Booster Power Supply FCC compliance

This equipment can generate and radiate radio frequency energy. If the equipment is not installed in accordance with this manual, it may cause interference to radio communications. This equipment has been tested and found to comply with the limits for Class A computing devices pursuant to Subpart B of Part 15 of the FCC Rules. These rules are designed to provide reasonable protection against such interference when this equipment is operated in a commercial environment. Operation of this equipment is likely to cause interference, in which case the user, at his own expense, will be required to take whatever measures may be required to correct the interference.

Introduction

This installation manual is intended for use by installers and field technicians. It provides the installation procedures, wiring diagrams, DIP switch settings, etc. required to install and set up the Remote Booster Power Supply (BPS).

Models covered

The following table lists the booster power supply models that are covered in this manual.

Catalog number	Description
BPS6A	6.5 A booster power supply
BPS6A/230	6.5 A booster power supply
BPS6AC	6.5 A booster power supply
MIRBPS6A	6.5 A booster power supply
MIRBPS6A/230	6.5 A booster power supply
XLS-BPS6A	6.5 A booster power supply
XLS-BPS6A/230	6.5 A booster power supply
EBPS6A	6.5 A booster power supply
EBPS6A/230	6.5 A booster power supply
BPS10A	10 A booster power supply
BPS10A/230	10 A booster power supply
BPS10AC	10 A booster power supply
MIRBPS10A	10 A booster power supply
MIRBPS10A/230	10 A booster power supply
XLS-BPS10A	10 A booster power supply
XLS-BPS10A/230	10 A booster power supply
EBPS10A	10 A booster power supply
EBPS10A/230	10 A booster power supply

Compatibility

The input circuits of the booster power supply can be connected to 12 VDC or 24 VDC systems.

For details about device compatibility, refer to the *Remote Booster Power Supply Compatibility List* (P/N 3100656).

Installation procedure checklist

Follow these steps to install and set up the booster power supply (BPS).

- ☐ Verify that all power and field wiring are de-energized before proceeding.
- ☐ Unpack the equipment.
- ☐ Review the “Getting started” section.
- ☐ Review the applications: Review the applications to determine how you want to use the BPS. See the “Applications” section.
- ☐ Prepare the site: Make sure the installation location is free from construction dust and debris and extreme temperature ranges and humidity.
- ☐ Install the enclosure: See “Installing the enclosure” for enclosure dimensions.
- ☐ Install option modules if required: See “Installing option modules in the enclosure.”
- ☐ Install the 3-TAMP tamper switch (if one is used): See “Installing the 3-TAMP tamper switch.”
- ☐ Set the jumpers: See “Setting the jumpers.”
- ☐ Set the DIP switch options: See “Setting the DIP switches.”
- ☐ Review wire routing: See “Wire routing.”
- ☐ Check field wiring for shorts, opens, and grounds.
- ☐ Connect the field wiring: See “Connecting the field wiring.”
- ☐ Turn on the AC mains power.
- ☐ Connect the battery compliment.
- ☐ Verify that no defaults are displayed.
- ☐ Test the system for proper operation.

Getting started

Description

The 6.5 A and 10 A booster power supplies are designed to extend the power capacity of an emergency communication, life safety, fire alarm, security, or access control system. You can activate the BPS from options modules or from a control circuit. It has four independent NAC/AUX circuits that are supervised, when configured for NAC. It is also equipped with a fault relay that you can configure for common trouble (with immediate AC failure indication), or as an AC mains failure indication relay (with delayed output). The BPS's sense input #1 also provides a common fault indicator by opening the output side of the sense circuit.

Component descriptions

Figure 1: Components

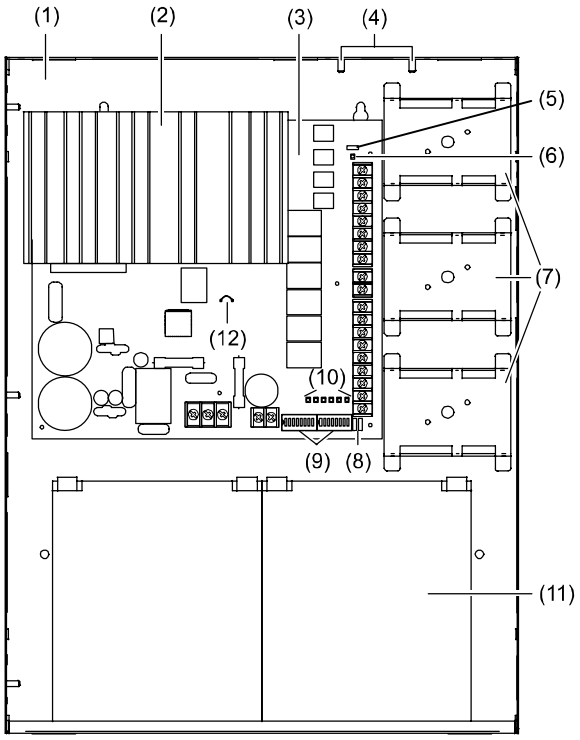

(1) Enclosure: Houses the electronics and two standby batteries
(2) Heat sink: Distributes heat away from the circuit board
(3) Circuit board: Provides connections for all circuits
(4) Tamper switch standoffs: 3-TAMP mounting standoffs
(5) Jumper JP3: Ground fault enable or disable option
(6) AC LED: AC power on
(7) Mounting brackets: Option module mounting brackets
(8) Jumpers JP1 and JP2: Class A or Class B NAC option
(9) DIP switches: Two eight-position DIP switches used for configuration
(10) Circuit LEDs: NAC, battery, and ground fault trouble LEDs
(11) Batteries: Up to two 10 Ah batteries fit in the enclosure. For larger batteries, use an external battery cabinet (BC-1 or BC-2).
(12) Jumper JP4: Battery charging jumper

Specifications

The following specifications apply to all BPS models.

AC line voltage 6.5 A BPS	120 VAC / 230 VAC (50/60 Hz), 390 W
10 A BPS	120 VAC / 230 VAC (50/60 Hz), 580 W
Sense voltage (input)	6 to 45 VDC (FWR and unfiltered DC)
Sense current (input)	6 mA at 24 VDC, 3 mA at 12 VDC, 12 mA at 45 VDC
NAC output voltage (special application circuit)	19.1 to 26.40 VDC **Note:** All NACs are supervised. Refer to the *Remote Booster Power Supply Compatibility List* P/N 3100656 for the maximum number of devices that can be used on a NAC circuit.
AUX output voltage (special application circuit)	19.0 to 26.48 VDC
NAC/AUX output current	3.0 A max. per circuit with 0.35 power factor (6.5 A or 10 A max. total for all NACs) (6 A or 8 A max. total for all AUXs)
NAC/AUX capacitive loading	10,000 μF max. for continuous NAC circuits 2,200 μF max. for coded rate NAC circuits 2,200 μF max. for AUX circuits
NAC/AUX class	Class A or Class B
Wire size	18 to 12 AWG (0.75 to 2.5 mm^2)
NAC EOL	UL: 15 kΩ (P/N EOL-15) ULC: Use P/N EOL-P1 and select the 15 kΩ resistor
Auxiliary output (continuous)	1 dedicated unsupervised, unswitched 200 mA auxiliary output Voltage range: 19.49 to 26.85 VDC
Common trouble relay	Form C, 1 A, 30 VDC (resistive)
Battery capacities	6.5 to 24 Ah for ECS/MNS/LSS applications 6.5 to 24 Ah for Security/Access Control applications 10 Ah maximum in BPS enclosure applications
Battery charger current limit [1]	1.2 A when the battery jumper wire is cut 2.1 A when the battery jumper wire is *not* cut
Operating environment Operating temperature Relative humidity	 32 to 120°F (0 to 49°C) 0 to 93% noncondensing
Ground fault impedance	10 kΩ
Intended installation environment	Indoor-dry

[1] The battery charger is disabled automatically and will not charge the batteries when the unit is activated via either of its *sense* inputs.

LED indicators

The BPS has seven LED indicators. See “Component descriptions” for the location of the LEDs.

Table 1: LED indicators

LED	Color	Description
AC	Green	AC power on.
NAC1	Yellow	NAC1/AUX1 trouble [1].
NAC2	Yellow	NAC2/AUX2 trouble [1].
NAC3	Yellow	NAC3/AUX3 trouble [1].
NAC4	Yellow	NAC4/AUX4 trouble [1].
BAT	Yellow	Battery trouble. Indicates that the battery level has fallen below acceptable levels.
GND	Yellow	Ground fault. Indicates that a ground fault has been detected on the field wiring.

[1] The NAC LEDs indicate a trouble with the load or external wiring on the NAC/AUX circuit. For circuits configured as NACs, this could be an open circuit trouble, short circuit trouble, or an overload trouble.

For short circuit troubles, the NAC does not activate until the short circuit condition is removed.

For overload troubles, an active NAC is shutdown. After shutdown, if there is no short circuit condition, the NAC reactivates after 30 seconds and checks to see if the overload condition still exists.

For AUX circuits, the trouble indicates an overload condition. The AUX circuit is shutdown for 30 seconds and then is reactivated to see if the overload condition still exists.

Trouble indicating and reporting

When the BPS trouble relay is not dedicated to AC power loss reporting (DIP switch SW2-6 OFF), the trouble conditions listed in the table above are reported through the trouble relay. Other internal troubles that do not have an associated LED are also reported via the BPS trouble relay. Other internal troubles include: DIP switch read trouble, RAM failure, code checksum failure, A to D failure, and battery charger failure.

All troubles are also reported through both sense circuit trouble relays.

Installing the enclosure

When installing this system, be sure to follow all applicable national and local codes and standards.

The enclosure can be surface mounted or semiflush mounted. See “Enclosure dimensions” below for details.

To surface mount the enclosure:

1. Position the enclosure on the finished wall surface.
2. Fasten the enclosure to the wall surface where indicated.
3. Install all conduits and pull all wiring into the enclosure before proceeding.

To semiflush mount the enclosure:

1. Frame the interior wall as required so that it supports the full weight of the enclosure and standby batteries.
2. Fasten the enclosure to the framing studs where indicated.
3. Install all conduits and pull all wiring into the enclosure before proceeding.

Figure 2: Enclosure dimensions

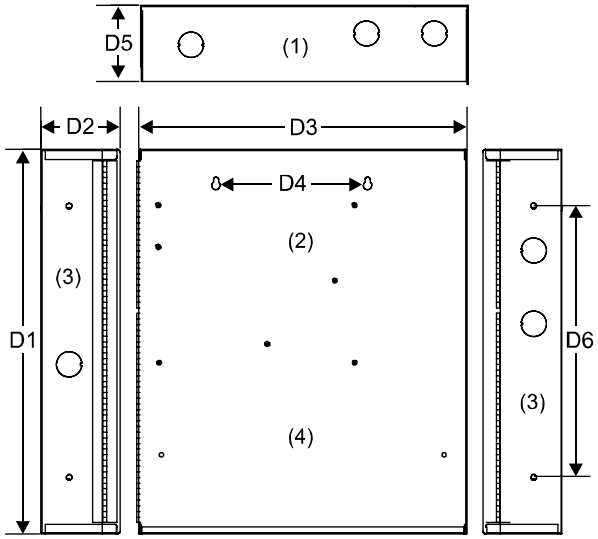

(1) Top view
(2) Front view
(3) Side view
(4) All knockouts are a combination 0.5 in. (1.27 cm) and 0.75 in. (1.9 cm)

D1	D2	D3	D4	D5	D6
17.0 in (43.2 cm)	3.5 in (8.9 cm)	13.0 in (33.0 cm)	6.5 in (16.5 cm)	3.375 in (8.6 cm)	12.0 in (30.4 cm)

Installing option modules in the enclosure

Up to three option modules can be installed on the mounting brackets inside the enclosure. Depending on the model, the device must be either screw-mounted or snap-mounted to the bracket.

To snap-mount modules on a bracket:

1. Snap the module into a mounting bracket.
2. Connect all wiring. Refer to the module's installation sheet for wiring information or to the *Signature Series Component Installation Manual* (P/N 270497).

Note: Route the wiring around the perimeter of the enclosure, not across the circuit board.

Figure 3: Mounting brackets with an option module

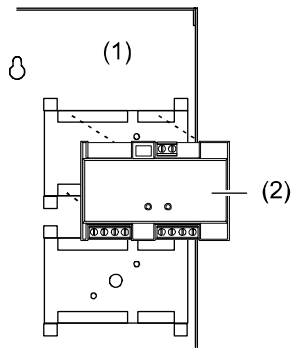

(1) Mounting brackets
(2) Option module

To screw-mount Signature Series modules on a bracket:

1. Remove the module's plastic cover.
2. Remove the circuit board from the plastic backing.
3. Screw the plastic backing to the mounting bracket using two #6, 1/4 flat head sheet metal screws. See Figure 4 on page 9.

   Note: For mounting MN-NETRLY4 modules, refer to the *MN-NETRLY4 Network Relay Module Installation Sheet*, P/N 310-1827-ML.
4. Insert the circuit board into the plastic backing.
5. Snap the module's plastic cover into place.
6. Connect all wiring. Refer to the module's installation sheet for wiring information or to the *Signature Series Component Installation Manual* (P/N 270497).

Note: Route the wiring around the perimeter of the enclosure, not across the circuit board.

Figure 4: Inserting the circuit board

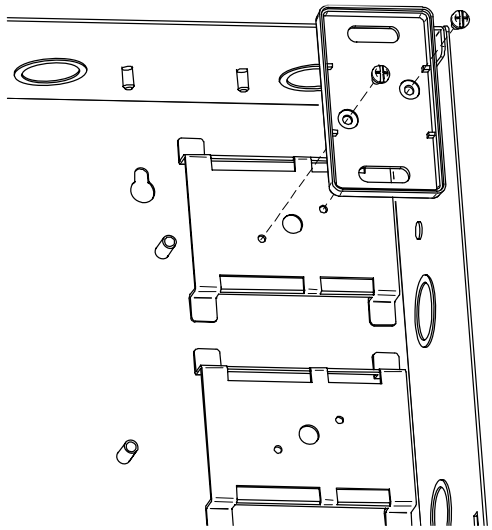

Installing the circuit board in the enclosure

You may have to remove the circuit board to install the enclosure. Reinstalling the circuit board in the enclosure must be done with accuracy to avoid causing ground faults or shorts. The screws and standoffs must be installed correctly and in the right positions. Use the diagrams below to install the circuit board.

Figure 5: Complete circuit board installation

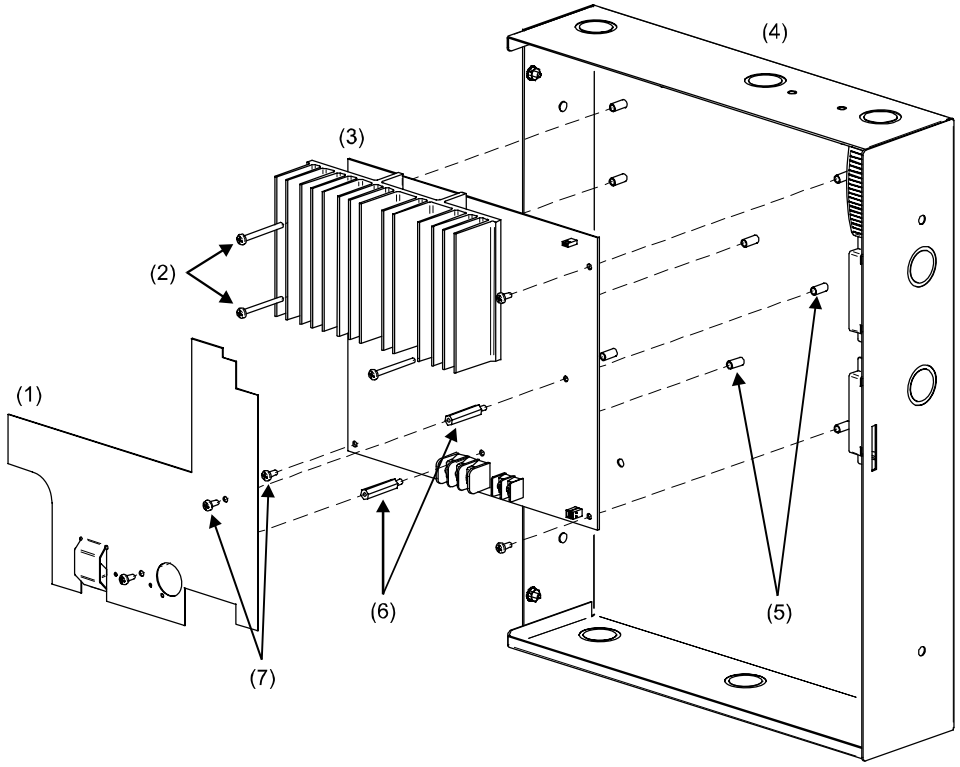

(1) Cover (“C” models, only)
(2) Long screws
(3) Circuit board
(4) Enclosure
(5) Enclosure standoffs
(6) Barrel spacers, see Figure 6 on page 11
(7) Short screws

Figure 6: Barrel spacer installation

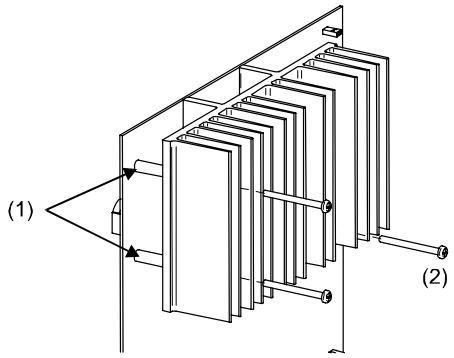

(1) Barrel spacers
(2) Long screws

Note: The barrel spacers must be positioned correctly so that the long screw can pass through the spacer and into the enclosure standoff.

Setting the jumpers

There are four jumpers on the BPS. See Figure 1 on page 4 for the location of the jumpers.

NAC Class A or Class B (JP1 and JP2)

JP1 and JP2 are used to select a Class A or Class B NAC wiring configuration for all NACs. The default is Class B.

Note: JP1 and JP2 must be positioned to match the SW2-8 DIP switch selection (Class A or Class B).

Figure 7: JP1 and JP2

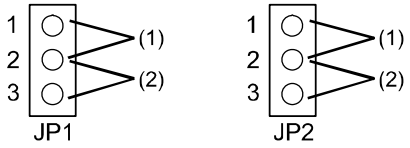

(1) Class A
(2) Class B

Ground fault enable (JP3)

JP3 is used to set the NAC/AUX circuits for ground fault enabled or disabled operation. The sense inputs are always isolated from local power.

Enabled: Allows the BPS to perform its own ground fault checking. This is the *default* position.

Disabled: Disable the BPS's ground fault detection only when the controlling panel is providing ground fault detection for the BPS output circuits. See Figure 8 on page 13 for wiring information.

Figure 8: Ground fault enable

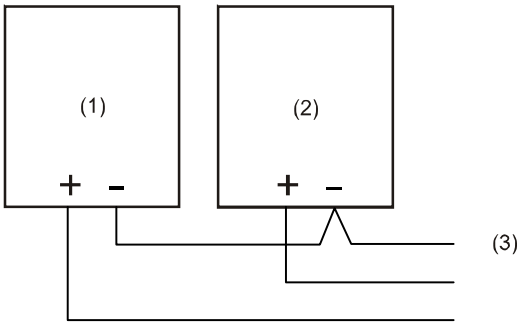

(1) Control panel. The control panel is responsible for ground fault detection when the BPS is wired in this fashion.
(2) BPS. Disable the BPS's ground fault jumper (JP3).
(3) To next BPS that requires ground fault detection from the control panel.

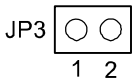

GF disable: *Do not* install jumper

GF enable: Install jumper

Battery charging (JP4)

The battery charging jumper is a small wire that controls how the batteries are charged. Battery size determines whether you must cut the jumper wire or leave it intact.

Cut the jumper wire when using batteries *under 10 Ah*.

Do not cut the jumper wire when using batteries *10 Ah or over*.

UL 864 programming requirements

NOTICE TO USERS, INSTALLERS, AUTHORITIES HAVING JURISDICTION, AND OTHER INVOLVED PARTIES

This product incorporates field-programmable options. In order for the product to comply with the requirements in the Standard for Control Units and Accessories for Fire Alarm Systems, UL 864, certain programming features or options must be limited to specific values or not used at all as indicated below. Some options were permitted under the previous versions of UL 864 and are provided to allow for service replacements on those systems.

Programmable feature or option	Permitted in UL 864? (Y/N)	Possible settings	Settings permitted in UL 864
Four second NAC audible synchronization delay [1]	N	On (4 second delay) Off (1 second delay)	Off
AC power delay	Y	On (3 hour, no dedicated AC failure contact) Off (no delay)	On

[1] This option is controlled by switch SW1-4. See “Synchronization control (SW1-4)” on page 16.

Setting the DIP switches

Two eight-position DIP switches are used to configure the BPS. The following sections show the DIP switch settings for the various input and output configurations.

Note: As shipped from the factory, all switches are in the OFF position.

Figure 9: Switch settings

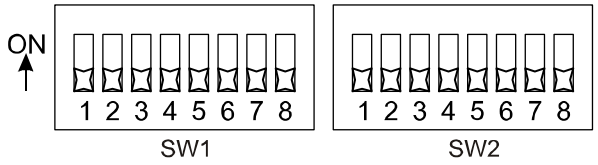

Sense 1 and 2 operation (SW1-1 to 3)

The BPS has three operating modes, as shown in the following table. Switches SW1-1, -2, and -3 determine which mode is used.

Table 2: Switch settings

Operating mode [1]	SW1-1	SW1-2	SW1-3
Correlate mode	OFF	–	–
Genesis Master mode	ON	OFF	ON
Nondelayed mode	ON	ON	–

[1] See the descriptions below for operation details

These switches also determine how Sense 1 and 2 correlate to the NAC circuits. Details for each mode are described below.

Correlate mode

In correlate mode, switches SW1-2 and SW1-3 control which NACs activate when the sense circuits activate. The correlations do not affect output circuits that are operating as AUX circuits.

The following table details which NACs activate when the sense circuits activate.

Table 3: Sense circuit to NAC correlations

Switch settings		Class B		Class A	
SW1-2	SW1-3	Sense 1	Sense 2	Sense 1	Sense 2
OFF	OFF	1, 2, 3, 4	1, 2, 3, 4	1/2, 3/4	1/2, 3/4
OFF	ON	1	2, 3, 4	1/2	3/4
ON	OFF	1, 2	3, 4	–	–
ON	ON	1, 2, 3	4	–	–

Genesis Master mode

In Genesis Master mode, Sense 1 is connected to a visible zone and Sense 2 is connected to an audible zone. All NACs are activated when Sense 1 activates. Continuous NACs generate Genesis audible on/off signals based on the Sense 2 input circuit.

Nondelayed mode

Nondelayed mode is intended to support coders. In this mode, there is no delay between activation of the sense input and activation of the NAC.

In nondelayed mode, switch SW1-3 controls which NACs activate when the sense circuits activate. The correlations do not affect output circuits that are operating as AUX circuits.

The following table details which NACs activate when the sense circuits activate.

Table 4: Sense circuit to NAC correlations

SW1-3 setting	Class B		Class A	
SW1-3	Sense 1	Sense 2	Sense 1	Sense 2
OFF	1, 2, 3, 4	1, 2, 3, 4	1/2, 3/4	1/2, 3/4
ON	1, 2	3, 4	1/2	3/4

In nondelayed mode, SW2-5 can be used to generate sync pulses for NACs configured in continuous mode. This supports applications that include Genesis strobes and conventional audibles. For this operation, the NACs for the audible signals must be configured in sense follow mode. There is no delay for either the visibles or the audibles.

Synchronization control (SW1-4)

Switch SW1-4 controls the synchronization of signals with either one- or four-second delay times. See the topic “Understanding BPS synchronization” for more information.

Note: When using nondelayed mode, this switch is inactive.

Table 5: Switch settings (SW1-4)

Switch setting	Operation description
ON	NACs turn on 4 seconds after the sense input is activated (e.g. Genesis NACs sync with the second round of the temporal signal)
OFF	NACs turn on 1 second after the sense input is activated (e.g. the Genesis NACs sync with the second flash of the Genesis strobes)

NAC circuit operation (SW1-5 to 8 and SW2-1 to 4)

Switch SW1-5 to 8 and SW2-1 to 4 control NAC operation.

Table 6: Switch settings (SW1-5 to 8 and SW2-1 to 4)

Operating mode	NAC1 SW1-5	SW1-6	NAC2 SW1-7	SW1-8	NAC3 SW2-1	SW2-2	NAC4 SW2-3	SW2-4
Sense Follow [1]	OFF	OFF	OFF	OFF	OFF	OFF	OFF	OFF
Continuous [1]	OFF	ON	OFF	ON	OFF	ON	OFF	ON
Temporal [1] [2]	ON	OFF	ON	OFF	ON	OFF	ON	OFF
Auxiliary [1]	ON	ON	ON	ON	ON	ON	ON	ON

[1] See the descriptions below for operation details

[2] For externally coded or temporal operations, set the BPS to sense follow mode and use an externally coded or temporal source to activate the BPS sense circuit to generate the coded or temporal pattern.

Sense follow mode

In sense follow mode, NACs are activated following the sense circuits that are defined to turn on the NACs. The NACs turn on with a one- or four-second delay to allow Genesis strobes to synchronize on the NAC side and sense side. The four-second delay does not comply with UL864 9th edition. In this mode, a continuous input, 120 ppm, temporal, or coded input can be used.

Note: Sense follow must be used when the sense circuit is connected to a SIGA-CC1S, Genesis G1M-RM, FireShield panel, or a BPS generating Genesis sync pulses.

Continuous mode

In continuous mode, NACs are activated following the sense circuits in continuous mode. They activate one or four seconds after the sense input activates and restore seven seconds after the sense input restores.

Note: Activating the NACs four seconds after the sense input restores does not comply with UL 864 9th edition.

Temporal mode

In temporal mode, NACs are activated following the sense circuits in temporal mode. They activate one or four seconds after the sense input activates and restore seven seconds after the sense input restores. NACs generate temporal output as defined by NFPA.

Note: Activating the NACs four seconds following sense circuits in temporal mode does not comply with UL 864 9th edition.

Auxiliary

In auxiliary mode, NACs turn on during power-up. Sync pulses are not generated. Aux circuits can be configured to stay active during a power fail or load shed on a power fail (after a 20 second delay). Aux circuits are load shed when the system reaches low battery to prevent deep discharge of the batteries.

Genesis mode for continuous NACs (SW2-5)

Switch SW2-5 controls NAC operation for Genesis synchronization in continuous mode.

Table 7: Switch settings (SW2-5)

Switch setting	Operation description
ON	Continuous NACs are Genesis strobe or horn/strobe circuits. Continuous NACs generate a Genesis sync pulse. In Genesis Master mode, continuous NACs generate Genesis audible on/off signals based on the Sense 2 input circuit.
OFF	Continuous NACs do not generate Genesis signaling pulses

AC power loss reporting (SW2-6)

Switch SW2-6 controls when a report is sent to the system for an AC power loss.

Table 8: Switch settings (SW2-6)

Switch setting	Operation description
ON	The BPS trouble relay is dedicated to AC power loss reporting. The trouble relay switches within 20 seconds when AC fails or restores. The sense circuits immediately signal a fault condition for any *non-AC* power loss faults. If AC power fails, the sense circuits signal a fault condition after three hours of power loss.
OFF	The trouble relay operates for any trouble on the BPS. The sense circuits signal a fault for any troubles.

Auxiliary control during AC power loss (SW2-7)

Switch SW2-7 controls auxiliary outputs during AC loss.

Note: The 200 mA continuous AUX circuit is not affected by AC power loss.

Table 9: Switch settings (SW2-7)

Switch setting	Operation description
ON	Auxiliary outputs turn off 20 seconds after power fail
OFF	Auxiliary outputs stay on after AC power fail until the battery is less than 18.4 VDC

Class A or B NAC configuration (SW2-8)

Switch SW2-8 controls NAC Class A or B operation for all NACs.

Note: Jumpers JP1 and JP2 must be set to match the operation of this switch.

Table 10: Switch settings (SW2-8)

Switch setting	Operation description
ON	Class A NACs
OFF	Class B NACs

Wire routing

Separate power-limited from nonpower-limited wiring. Wiring within the enclosure should be routed around the perimeter of the enclosure, not across the circuit board.

Figure 10: Wire routing

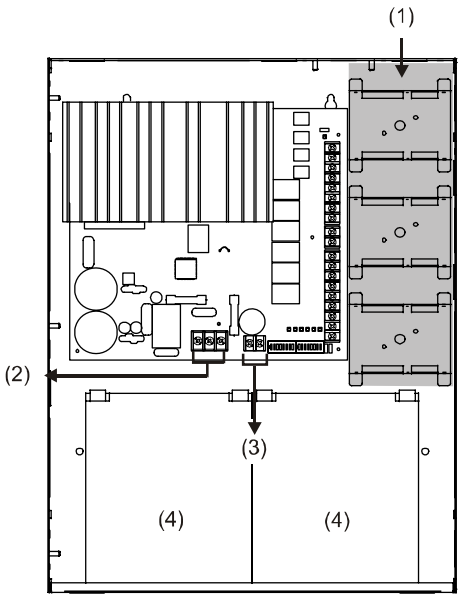

Legend
(1) Power-limited wiring area
(2) Route AC supply through knockouts in nonpower-limited area
(3) Battery wiring
(4) Battery

Notes
- Maintain 0.25 in. (6 mm) spacing between power-limited and nonpower-limited wiring.
- NAC circuits are power-limited and supervised for opens, shorts, and overcurrents. When configured as auxiliary power circuits, they are power-limited and supervised for shorts and overcurrents.
- Source must be power-limited. Source determines supervision.
- Position the battery terminals towards the door.

Connecting the field wiring

Caution: Break the wire run at each terminal connection to provide proper connection supervision. Do not loop wires under the terminals.

AC power wiring

Figure 11: AC power wiring

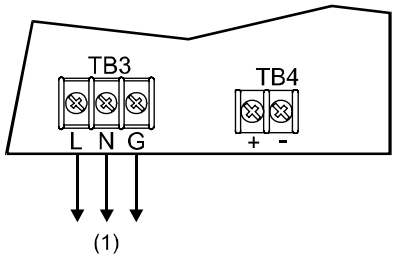

(1) 120 VAC connection shown. For 230 VAC connections, connect L1 to L and L2 to N. Do not operate unit without a ground connection.

Battery wiring

Two backup batteries are required with the BPS. The largest batteries that fit in the BPS enclosure are 10 Ah. Batteries larger than 10 Ah must be installed in a BC-1 or BC-2 battery cabinet.

Caution: For proper battery charging, the battery charging jumper wire (JP4) must be set according to the battery size you are using. Refer to “Setting the jumpers” for details about jumper JP4 and Figure 1 for the location of JP4.

Notes

- Batteries should be replaced every five years, or as required by local codes.
- Refer to local and national codes for battery maintenance requirements.

Figure 12: Battery wiring

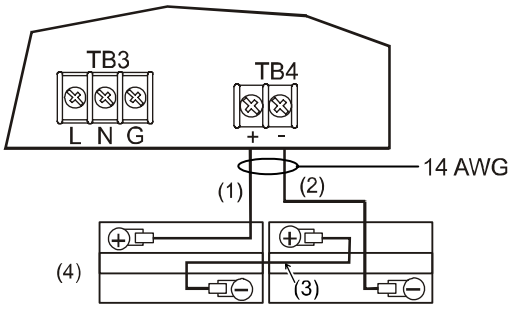

(1) Red
(2) Black
(3) Blue
(4) Top view

NAC Class B wiring

Connect a single NAC circuit to one NAC output. Terminate the circuit with a 15 k∧ EOL resistor.

Figure 13: NAC class B wiring

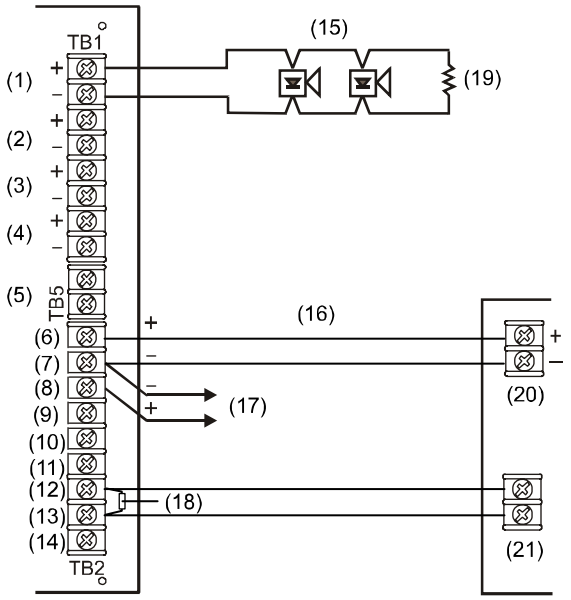

Legend

(1) NAC1
(2) NAC2
(3) NAC3
(4) NAC4
(5) 200 mA AUX Continuous
(6) Sense 1 IN
(7) Sense 1 COM
(8) Sense 1 OUT
(9) Sense 2 IN
(10) Sense 2 COM
(11) Sense 2 OUT
(12) Trouble NO
(13) Trouble COM
(14) Trouble NC
(15) Notification appliance circuit (NAC), typical of up to four NACs
(16) Input from signaling circuit. This is a control circuit. NACs are not permitted.
(17) To next booster, or NAC end-of-line resistor
(18) EOL
(19) EOL (UL listed 15 kΩ for NAC)
(20) Control circuit source
(21) AC power fail monitoring

Notes

- A trouble on the booster power supply is sensed on the circuit that connects to the BPS sense input. This removes the need to separately monitor the trouble contact except for AC power failure.
- In an alarm condition, the booster power supply allows NAC current to move downstream to devices connected to the existing control panel's NAC circuit.
- Refer to the connected control module or control unit's documentation for more details on control circuit wiring.
- The AC power failure panel connection annunciates at the panel but does not report off premises for a predetermined time in U.S. fire applications. See Table 8 on page 19.

NAC Class A wiring

Connect one NAC circuit to one NAC output, either NAC1 or NAC3. Terminate the circuit at the NAC2 or NAC4 terminal screw, respectively.

Figure 14: NAC class A wiring

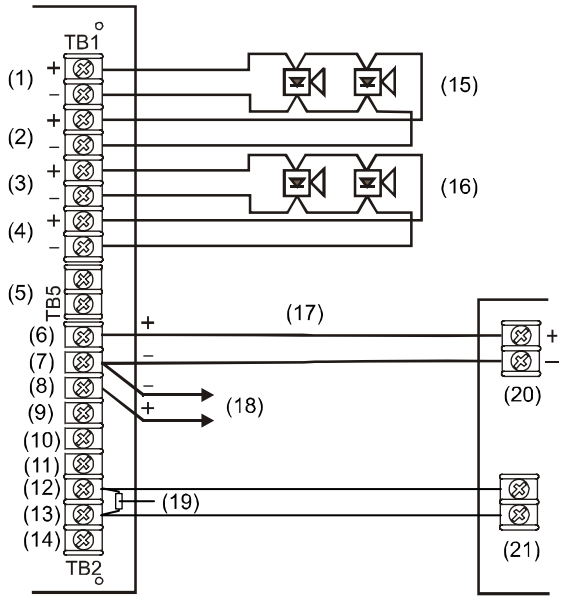

Legend

(1) NAC1/AUX1
(2) NAC2/AUX2 (return for NAC1)
(3) NAC3/AUX3
(4) NAC4/AUX4 (return for NAC3)
(5) 200 mA AUX Continuous
(6) Sense 1 IN
(7) Sense 1 COM
(8) Sense 1 OUT
(9) Sense 2 IN
(10) Sense 2 COM
(11) Sense 2 OUT
(12) Trouble NO
(13) Trouble COM
(14) Trouble NC
(15) Notification appliance circuit (NAC)
(16) Notification appliance circuit (NAC)
(17) Input from signaling circuit
(18) To next booster, or NAC returning to existing control panel
(19) EOL for IDC circuit
(20) Control circuit source
(21) AC power fail monitoring

Note: The AC power failure panel connection annunciates at the panel but does not report off premises for a predetermined time in US fire applications. See Table 8 on page 19.

Sense circuit wiring

The BPS has two Class B sense (activation) circuits (Sense 1 and Sense 2). See Figure 13 and Figure 14.

Note: When NACs 1, 2, 3, and 4 are configured for AUX (Figure 16), sense activation of NAC circuits reports a trouble condition to the control panel using these circuits.

Any BPS trouble opens the sense circuit, which sends a trouble event message to the control panel, indicating that a trouble exists on that circuit.

AUX power wiring

Figure 15: Dedicated AUX power

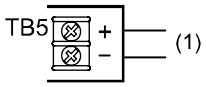

(1) AUX power 200 mA continuous

NAC configured as AUX power

Each NAC can be configured through a DIP switch for use as AUX power. A DIP switch also controls AUX operation during AC power loss. See “Setting the DIP switches” for details.

This auxiliary configuration is compatible with fire alarm, security, and access control applications, which can be combined in a single system, if all of the devices are listed.

Trouble relay wiring with four AUX circuits

When all four NAC/AUX circuits are configured as AUX circuits and DIP switch SW2-6 is ON, a SIGA-CT2 module must be used to monitor the sense 1 trouble contacts and the trouble relay.

Figure 16: Trouble relay wiring with four AUX circuits

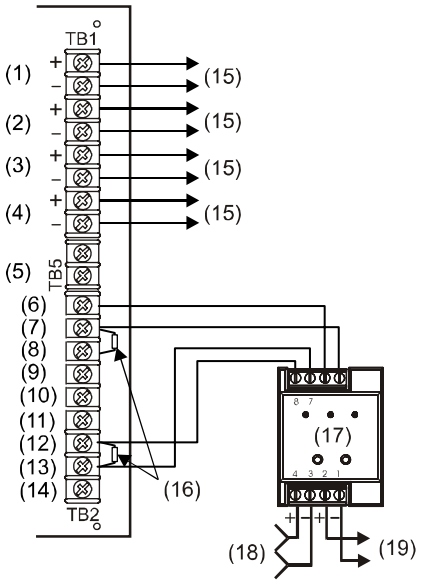

Legend

(1) NAC1/AUX1
(2) NAC2/AUX2
(3) NAC3/AUX3
(4) NAC4/AUX4
(5) 200 mA AUX Continuous
(6) Sense 1 IN (trouble contact)
(7) Sense 1 COM (trouble contact)
(8) Sense 1 OUT (trouble contact)
(9) Sense 2 IN
(10) Sense 2 COM
(11) Sense 2 OUT
(12) Trouble NO
(13) Trouble COM
(14) Trouble NC
(15) To auxiliary device.
(16) EOL 47 kΩ
(17) CT2 module
(18) Data in from previous device or Signature controller
(19) Data out to next device

Notes

- The NAC/AUX circuit must be configured for AUX operation using the DIP switches. See “Setting the DIP switches” for details.
- CT2 modules must be wired and programmed on the Signature controller for proper operation.
- AC power loss causes circuit 2 on the CT2 to report a trouble to the control panel (see panel programming). All other BPS troubles cause circuit 1 (Sense 1) on the CT2 to report a trouble to the panel.

Common trouble relay wiring

The BPS has a Form C common trouble relay that provides a normally open and normally closed contact. The trouble relay switches under any trouble condition when DIP switch SW2-6 is off. When the switch is on, the BPS trouble relay is dedicated to AC power loss reporting. The trouble relay switches within 20 seconds when AC fails or restores. The sense circuits immediately signal a fault condition for any non-AC power loss faults. When AC power fails, the sense circuits signal a fault condition after three hours of power loss.

Figure 17: Common trouble relay wiring

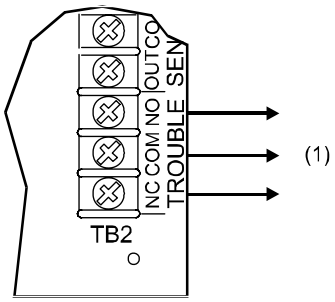

(1) To booster trouble monitoring device

When using the sense circuit as common trouble relays, the BPS operates as outlined in the following scenarios.

Scenario 1: Trouble on any non-AC power fault

Result:

- Sense 1 opens.
- An AC power failure closes the trouble contact at 20 seconds and activates Sense 1 at three hours.

For a wiring example, see Figure 16 on page 27.

Scenario 2: Sense 1 activates all four NAC circuits

Result:

- Sense 1 opens.
- An AC power failure closes the trouble contact at 20 seconds and activates Sense 1 at three hours.

For a wiring example, see Figure 19 on page 30.

Scenario 3: Sense 1 and Sense 2 are operating with multiple CC1 modules

Result:

- A fault on NAC 1 or NAC 2 causes Sense 1 to open.
- A fault on NAC 3 or NAC 4 causes Sense 2 to open.
- A panel-related fault other than an AC failure (e.g., ground fault or battery fault) causes Sense 1 and Sense 2 to open.
- An AC power failure closes the trouble contact at 20 seconds and activates Sense 1 at three hours

For a wiring example, see Figure 20 on page 32.

NAC wiring using CC1(S) modules

The following wiring diagrams show Signature Series CC1(S) module connections. However, other Signature Series signal modules can be used.

Figure 18: Single CC1(S) using the BPS's 200 mA AUX continuous circuit

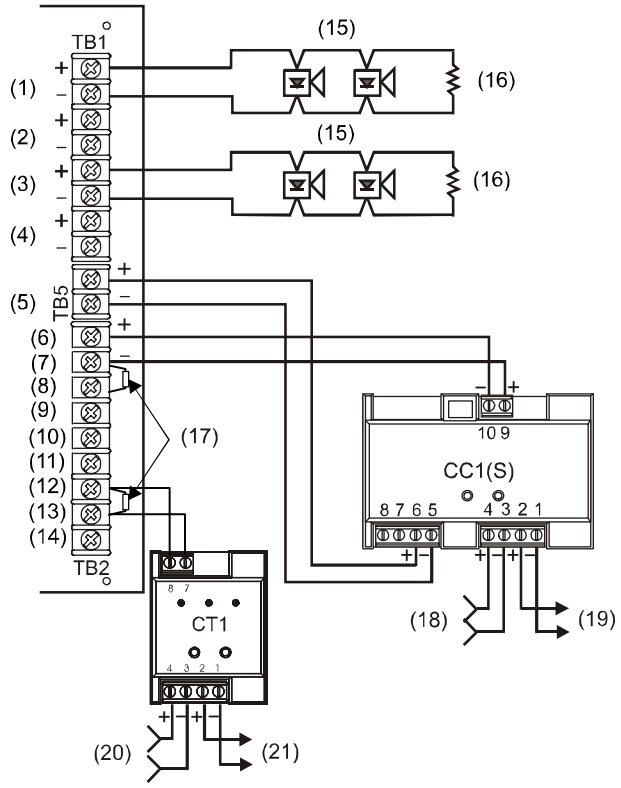

Legend

(1) NAC1/AUX1
(2) NAC2/AUX2
(3) NAC3/AUX3
(4) NAC4/AUX4
(5) 200 mA AUX Continuous
(6) Sense 1 IN
(7) Sense 1 COM
(8) Sense 1 OUT
(9) Sense 2 IN
(10) Sense 2 COM
(11) Sense 2 OUT
(12) Trouble NO
(13) Trouble COM
(14) Trouble NC
(15) Notification appliance circuit (NAC)
(16) UL listed EOL 15 kΩ
(17) EOL 47 kΩ
(18) Data in from previous device or Signature controller
(19) Data out to next device
(20) Data in from previous device or Signature controller
(21) Data out to next device

Notes

- CC1(S) modules must be wired and programmed on the Signature controller for proper operation.
- Any BPS trouble causes the CC1(S) supervision to report a trouble to the main control panel when DIP switch SW2-6 is on. AC power failure is delayed for three hours.
- CC1(S) wiring must be within three feet of the BPS enclosure and in conduit or mounted within the BPS's enclosure. If CC1(S) wiring is more than three feet from a BPS enclosure, then a separate listed EOL relay (PAM1, 6254A-003, or 73402A) or equivalent must be used to supervise the 200 mA AUX circuit wiring.
- When configured for AC power loss reporting using the trouble relay (DIP switch SW2-6 ON), the CT1 module supervises and reports the AC power loss to the control panel. When DIP switch SW2-6 is OFF, the CT1 module is not required.

Figure 19: Multiple CC1(S) modules using the BPS's sense inputs

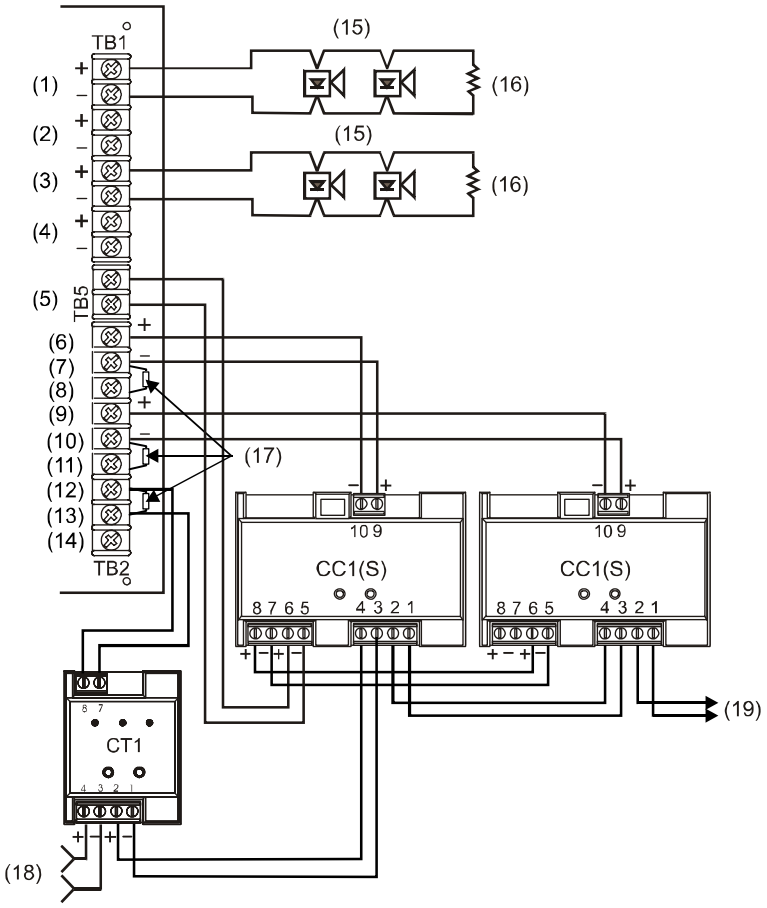

Legend

(1) NAC1/AUX1
(2) NAC2/AUX2
(3) NAC3/AUX3
(4) NAC4/AUX4
(5) 200 mA AUX Continuous
(6) Sense 1 IN
(7) Sense 1 COM
(8) Sense 1 OUT
(9) Sense 2 IN
(10) Sense 2 COM
(11) Sense 2 OUT
(12) Trouble NO
(13) Trouble COM
(14) Trouble NC
(15) Notification appliance circuit (NAC)
(16) UL listed EOL 15 kΩ
(17) EOL 47 kΩ
(18) Data in from previous device or Signature controller
(19) Data out to next device

Notes

- CC1(S) modules must be wired and programmed on the Signature controller for proper operation.
- Any BPS trouble causes the CC1(S) supervision to report a trouble to the main control panel when DIP switch SW2-6 is on. AC power failure is delayed for three hours.
- If CC1(S) wiring is more than three feet from a BPS enclosure, then a separate listed EOL relay (PAM1, 6254A-003, or 73402A) or equivalent must be used to supervise the 200 mA AUX circuit wiring.
- When configured for AC power loss reporting using the trouble relay (DIP switch SW2-6 ON), the CT1 module supervises and reports the AC power.

Figure 20: Multiple CC1(S) modules using one of the BPS's NAC/AUX circuits

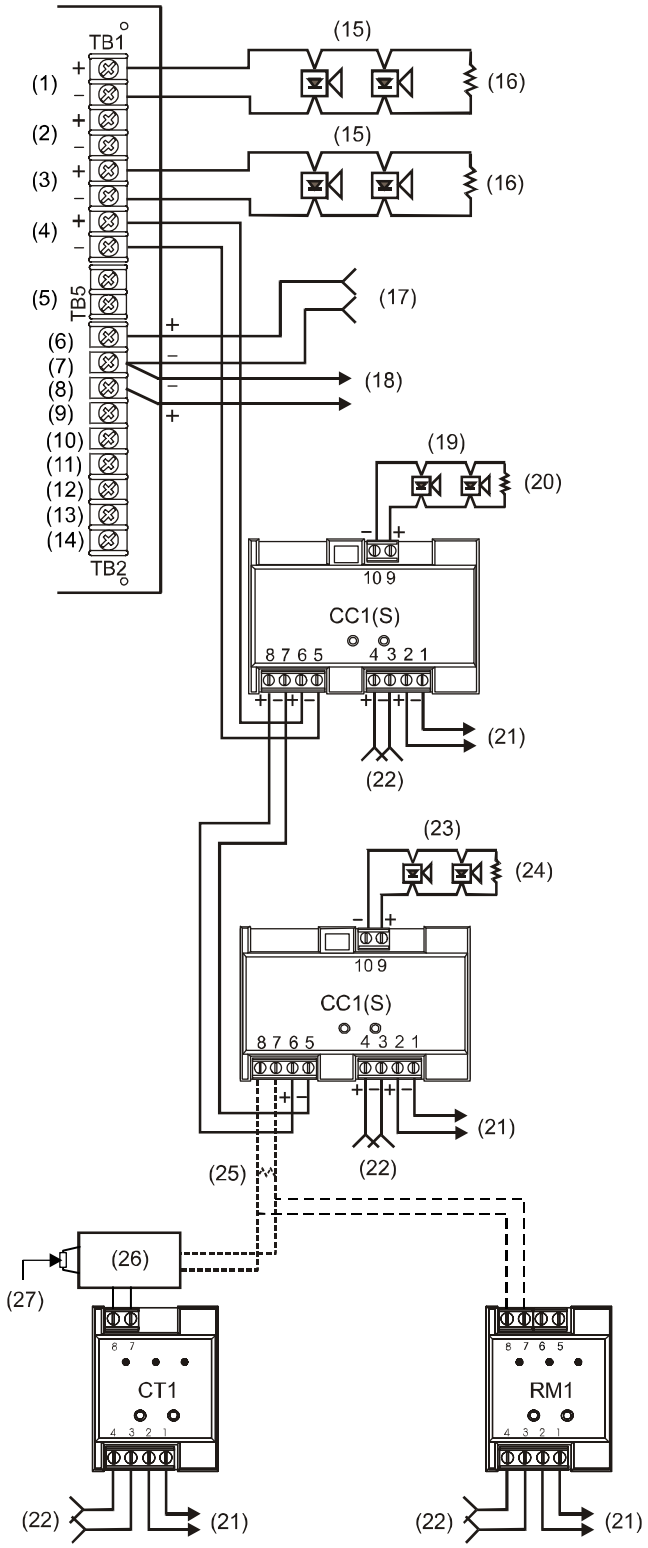

Legend

(1) NAC1/AUX1
(2) NAC2/AUX2
(3) NAC3/AUX3
(4) NAC4/AUX4
(5) 200 mA AUX Continuous
(6) Sense 1 IN
(7) Sense 1 COM
(8) Sense 1OUT
(9) Sense 2 IN
(10) Sense 2 COM
(11) Sense 2 OUT
(12) Trouble NO
(13) Trouble COM
(14) Trouble NC
(15) Notification appliance circuit (NAC)
(16) UL listed EOL 15 kΩ
(17) From existing fire alarm panel notification circuit or CC1(S) module
(18) Out to EOL or next device
(19) NAC circuit
(20) UL listed EOL 15 kΩ
(21) Data out to next device
(22) Data in from previous device or Signature controller
(23) NAC circuit
(24) UL listed EOL 15 kΩ
(25) EOL 15 kΩ, when used as a NAC
(26) UL listed EOL relay
(27) EOL 47 kΩ

Notes

- When a booster power supply output is programmed as an AUX output, a listed EOL relay (PAM1, 6254A-003, or 73402A) or equivalent must be used to supervise the AUX output.
- When a booster power supply output is programmed as an NAC output, a 15 kΩ EOL resistor must be used for supervision.

Installing the 3-TAMP tamper switch

The 3-TAMP tamper switch is used to detect an open enclosure door for security purposes.

Note: The 3-TAMP tamper switch *must* be used for security applications and connected to a SIGA-SEC2 module mounted in the enclosure.

To install the tamper switch:

1. Install an EOL resistor on the 3-TAMP. Refer to the *3-TAMP Installation Sheet* (P/N 387422) for more information.
2. Position the tamper switch over the mounting standoffs. See the diagram below.
3. Use the two locking nuts provided to secure the tamper switch. See the diagram below.
4. Connect all wiring to the tamper switch. Refer to the *3-TAMP Installation Sheet* (P/N 387422) for details on wiring the tamper switch.

Figure 21: Tamper switch installation

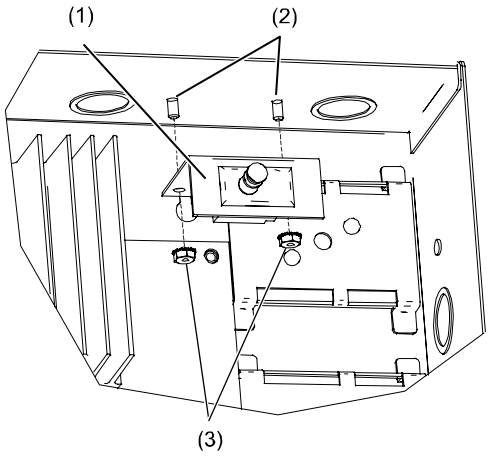

(1) 3-TAMP tamper switch
(2) Mounting standoffs
(3) Locking nuts

Battery calculation worksheet

Supervisory (AUX1, AUX2, AUX3, AUX4) Note: Only add auxiliary current if SW2-7 is OFF. Auxiliary output stays on after AC power failure.				
Device type	Quantity	Current (mA)	Total/device	
Total AUX current (0 if switch SW2-7 is off, maximum 6.5 A for BPS6A and 8 A for BPS10A):				mA (A)
Number of circuits set to AUX		35 mA (per AUX circuit)		mA (B)

200 mA AUX				
Device type	Quantity	Current (mA)	Total/device	
Total 200 mA AUX current:				mA (C)

Rated base BPS supervisory current:	70 mA (D)
Total supervisory current (A + B + C + D):	mA (E)
Hours of supervisory:	Hrs (F)
Supervisory mAh (E x F):	mAh (G)

Alarm (NAC1, NAC2, NAC3, NAC4)				
Device type	Quantity	DC current (mA, RMS)	Total/device	
Total NAC current:				mA (H)

Rated base BPS alarm current:	270 mA (J)
Total alarm current (E + H + J):	mA (K)
Minutes of alarm:	Min (L)
Hours of alarm (L/60):	Hr (M)

Alarm mAh required (K x M):	mAh (N)

Total battery mAh (N + G):	mAh (O)
Total battery Ah (O/1000):	Ah (P)
Factor of safety 20% [1] (P x 1.20)	Ah (Q)
Supervisory battery current (E/1000):	A (R)

[1] Twenty percent safety margin per NFPA 72-2010 10.5.6.3.1 (1).

Notification appliance circuit calculations

Introduction

This topic shows you how to determine the maximum cable length of a notification appliance circuit (NAC) for a given number of appliances.

Two methods are presented: worksheet and equation. The worksheet method is simpler, but your installation must meet the criteria listed on the worksheet. If your installation does not meet these criteria, you need to use the equation method.

The methods given here determine cable lengths that work under all operating conditions. The calculations ensure that the required operating voltage and current will be supplied to all notification appliances. To do this, we assume these two worst-case conditions:

- The voltage at the NAC terminals is the minimum provided by the power supply
- The notification appliances are clustered at the end of the NAC circuit

Other, more detailed methods that distribute the appliance load along the NAC cable may indicate that longer cable runs are possible.

What you'll need

Appliance and cable values

Whether you use the worksheet method or the equation method, you'll need to know:

- The minimum operating voltage required for the appliances
- The maximum operating current drawn by each appliance
- The resistance per unit length of the wire used (Ω/ft)

This information can be found on the appliance installation sheets and on the cable specification sheet.

Power supply values

For either method, you'll need some fixed or calculated operating values for your specific power supply. The fixed values are:

- Maximum voltage = 26.3 V
- Source voltage = 19.1 V
- Load factor = 0.59 V/A
- Power type = DC (filtered/regulated)

The *maximum voltage* is the highest voltage measured at the NAC terminals. This value is not used in the calculations, but is given so you can ensure appliance compatibility.

The *source voltage* is the BPS is 19.1 VDC operating minimum for the power supply, and is calculated as 85% of 24 volts minus the internal panel loss.

The *load factor* is a measure of how the power supply voltage reacts when a load is applied. The load factor measures the voltage drop per ampere of current drawn by the load.

The *power type* reflects the type of power supplied to the NAC terminals at minimum voltage. The current draw of notification appliances can vary substantially with the type of power supplied: full-wave rectified (VFWR) or direct current (VDC). It is important to know the power type at minimum terminal voltage.

You'll need to calculate the following values relating to your power supply and to the NAC circuit current. These are:

- Minimum voltage
- Voltage drop

The *minimum voltage* is the lowest voltage measured at the NAC terminals when the power supply is under the maximum load for that circuit (i.e. for the appliances that constitute the NAC.)

The *voltage drop* is the difference between the minimum voltage and 16 V. This value is for use with the worksheet only.

Worksheet method

Use this worksheet to determine the maximum cable length of a notification appliance circuit for a given number of appliances.

Use this worksheet only if all the appliances are regulated. That is, they must have a minimum operating voltage of 16 V. For other appliances, use the "Equation method."

Worksheet 1: NAC cable length

		NAC1	NAC2	NAC3	NAC4	
Total operating current [1]						A
Load factor	×	0.59	0.59	0.59	0.59	V/A
Load voltage drop	=					V
Source voltage		19.1	19.1	19.1	19.1	V
Load voltage drop	−					V
Minimum voltage	=					V
Regulated appliance voltage	−	16.0	16.0	16.0	16.0	V
Voltage drop [2]	=					V
Total operating current	÷					A
Maximum resistance	=					Ω
Wire resistance (Ω/ft) [3]	÷					
Maximum wire length	=					ft
	÷	2	2	2	2	
Maximum cable length	=					ft

[1] Total of the maximum operating currents for all appliances as specified for DC power. See the appliance installation sheets for operating currents.

[2] This voltage drop is valid for regulated notification appliances only. For special application appliances, see "Equation method," later in this topic.

[3] Use the manufacturer's published wire resistance expressed in ohms per foot. For typical values, see Table 11 on page 40.

Equation method

Appliance operating voltage and current

Regulated notification appliances have an operating range from 16 V to 33 V. Use 16 V as the minimum appliance voltage when using regulated notification appliances.

When using special application appliances, refer to the installation sheets to determine the minimum appliance voltage required.

What if there are different types of appliances in the NAC, and each type has a different minimum operating voltage? In this case, use the *highest* minimum voltage required by any appliance.

The total current requirement for the appliances will be the sum of the individual maximum currents drawn by each appliance when using DC power. Use the maximum current for the appliance over the 16 V to 33 V range.

If all appliances draw the same maximum current, the total current is the maximum current multiplied by the number of appliances. If different appliance types have different maximum currents, the total current is the sum of the maximum current for each appliance type multiplied by the number of appliances of that type.

Wire resistance

Typical wire resistances are shown in the following table.

Table 11: Typical wire resistances

Wire gauge (AWG)	Resistance Solid uncoated copper		Resistance Stranded uncoated copper	
	Ω per foot	Ω per meter	Ω per foot	Ω per meter
12	0.00193	0.00633	0.00198	0.00649
14	0.00307	0.01007	0.00314	0.01030
16	0.00489	0.01604	0.00499	0.01637
18	0.00777	0.02549	0.00795	0.02608

Note: When performing these calculations, always refer to the actual cable supplier documentation and use the actual Ω/ft (or Ω/m) at the appropriate temperature for the cable being used.

Calculating cable length

To calculate the maximum NAC cable length:

1. Calculate the total current (Itot) as the sum of the maximum operating currents for all the appliances.

   Itot = ΣIa

   Where:
   Ia = appliance maximum current

   See the appliance installation sheets for Ia. Remember to use the maximum operating current specified for DC power.

2. Calculate the minimum voltage (Vm).

   Vm = Vs − (Itot × K)

   Where:
   Vs = source voltage
   Itot = total current (from above)
   K = load factor

   For the power supply, Vs is 19.1 V and K is 0.59 V/A.

3. Calculate the allowable voltage drop (Vd) between the power supply and the appliances.

   Vd = Vm − Va

   Where:
   Vm = minimum voltage (from above)
   Va = appliance minimum voltage

   For regulated notification appliances, Va is 16 V. For special application appliances, Va is the lowest operating voltage specified on the appliance installation sheet.

4. Calculate the maximum resistance (Rmax) for the wire.

   Rmax = Vd / Itot

   Where:
   Vd = voltage drop
   Itot = total current

5. Calculate the maximum length of the cable (Lc), based on the maximum resistance allowed, the resistance of the wire, and the number of wires in the cable (two).

   Lc = (Rmax / Rw) / 2

Where:
Rmax = maximum resistance
Rw = wire resistance factor

Example: You're using regulated notification appliances. Assume that the maximum operating current for each appliance is 100 mA for DC power, and that 20 appliances will be placed on the NAC. The cable is 12 AWG wire, and the manufacturer specifies a wire resistance factor of 0.002 Ω/ft.

Itot = ΣIa
= 20 × 0.1 A
= 2 A

Vm = Vr − (Itot × K)
= 19.1 V − (2 A × 0.59 V/A)
= 19.1 V − 0.76 V
= 18.94 V

Vd = Vm − Va
= 18.94 V − 16.0 V
= 2.94 V

Rmax = Vd / Itot
= 2.94 V / 2.0 A
= 1.47 Ω

Lc = (Rmax / Rw) / 2
= (1.47 Ω / 0.002 Ω/ft) / 2
= (367.5 ft) / 2
= 367.5 ft

So the maximum wire run for this NAC would be 367.5 ft (rounding down for safety).

Understanding BPS synchronization

When using Genesis devices, the activation of the visible and audible output circuits on the BPS are determined by how the BPSs are connected. No matter how BPSs are connected, their outputs are “in sync” but there is an output activation delay of either one or four seconds. This section details how BPS outputs work based on how they are connected.

Connection of booster power supplies

Multiple BPSs can be connected in parallel. How you connect your BPSs affects the synchronization of your system’s outputs.

BPSs can be connected in parallel using their sense circuits. When connected via the sense circuits, all BPS outputs have either a one- or four-second delay from the time the driver NAC turns on to the time the BPS NACs turn on. The four-second delay does not comply with UL 864 9th edition. Delay time is controlled by DIP switch SW1-4. See “Setting the DIP switches” for more information.

Figure 22: BPSs connected in parallel with sense circuits

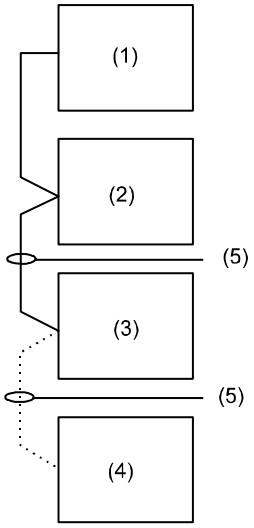

Legend
(1) NAC circuit
(2) BPS 1
(3) BPS 2
(4) BPS x
(5) Sense circuit

Notes
- To ensure all BPSs are synchronized in a Genesis application, the driving NAC must provide the Genesis synchronization pulse. Therefore, the BPSs must not be set to Genesis mode.
- The quantity of BPSs that can be connected is limited by wire run length and available current.

Synchronization of visible outputs

In the figure below, all visible output circuits on each BPS activate with a one second delay. This requires that the BPSs be connected in parallel through their sense circuits.

Figure 23: Synchronization with a one second output activation delay

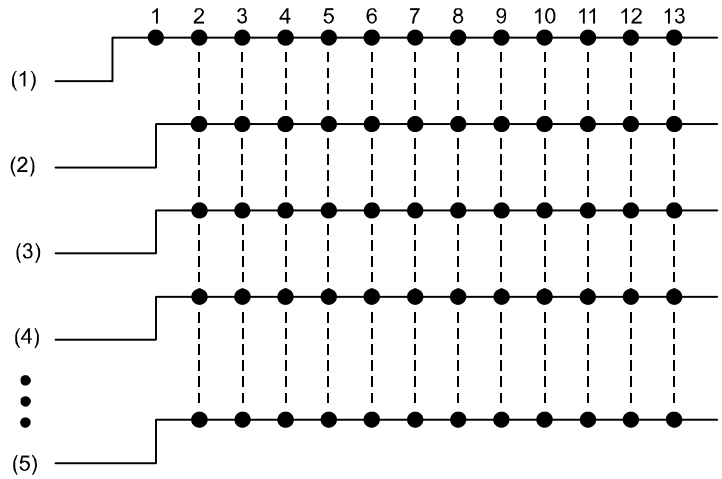

(1) On Sense Off
(2) Output booster 1
(3) Output booster 2
(4) Output booster 3
(5) Output booster *n*

Sync diagram key
Strobe flash
Audible tone

Synchronization of visible and audible outputs

One-second delay of outputs

In the figure below, all visible and audible circuits are synchronized with a one second output activation delay when the BPSs are connected in parallel through their sense circuits.

Note: Delay time is controlled by DIP switch SW1-4. See “Setting the DIP switches” for more information.

Figure 24: BPSs connected in parallel with sense circuits

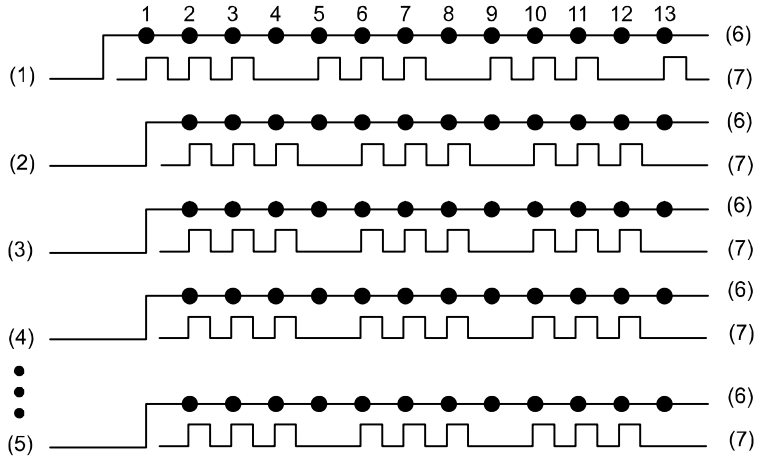

(1) On Sense Off
(2) Output booster 1
(3) Output booster 2
(4) Output booster 3
(5) Output booster *n*
(6) Visible
(7) Audible

Sync diagram key
Strobe flash
Audible tone

Four-second delay of outputs (temporal setting)

Note: Four-second delay operation does not comply with UL 864 9th edition.

In Figure 25 all visible and audible circuits are synchronized with a four second output activation delay when the BPSs are connected in parallel through their sense circuits.

Note: Delay time is controlled by DIP switch SW1-4. See “Setting the DIP switches” for more information.

Figure 25: BPSs connected in parallel with sense circuits

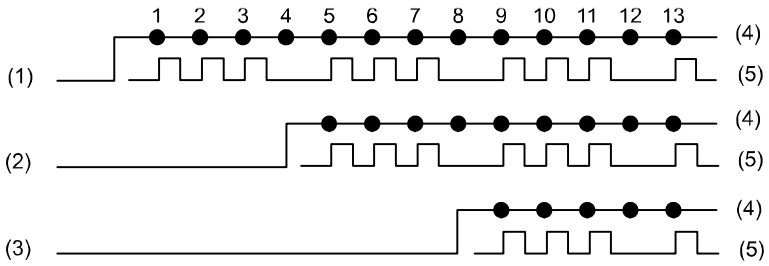

(1) On Sense Off
(2) Output booster 1
(3) Output booster 2
(4) Visible
(5) Audible

Sync diagram key
Strobe flash
Audible tone

Applications

Disclaimer: The applications in this section are shown in general terms. It is the responsibility of the installer and designer to adhere to the local and national codes when applying and installing the BPS.

Key

The following symbols and notations are found on the application diagrams in this section.

Device labels

Symbol	Description
V	Visible device
A	Audible device
G	Genesis visible/audible device
V/A	Visible or audible device
G	Device generating the Genesis sync pulse **Note:** When this symbol appears on a BPS, the Genesis sync pulse is controlled by DIP switch SW2-5.

BPS modes (controlled by DIP switch)

Notation	Description
COR	Correlate mode
GM	Genesis Master mode
ND	Nondelayed mode

NAC settings (controlled by DIP switch)

Notation	Description
SF	Sense follow
CONT	Continuous
Temp/Cal	Temporal/California
AUX	Auxiliary

Genesis circuit notification

Figure 26: Genesis circuit notification

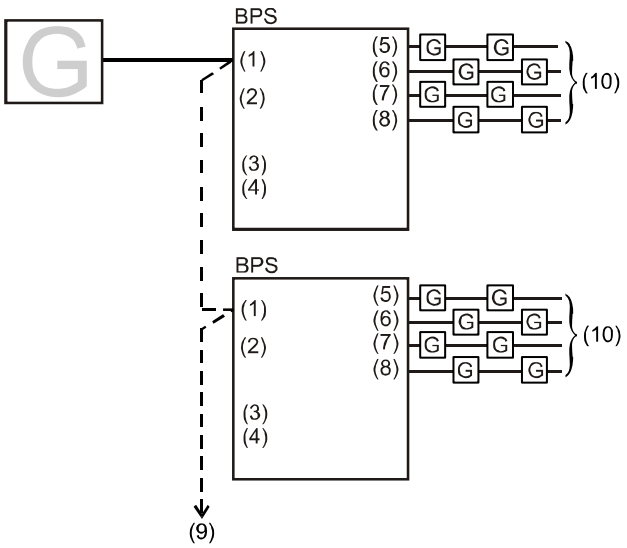

(1) Sense 1
(2) Sense 2
(3) Mode: COR
(4) NACs: SF
(5) NAC 1
(6) NAC 2
(7) NAC 3
(8) NAC 4
(9) To BPS, or EOL resistor
(10) To next device or EOL resistor

Note: The maximum number of BPSs that can be connected on a single NAC from sense circuit to sense circuit is limited by available current and wire run length.

DIP switch settings for this application

Each BPS DIP switch can be set this way for the application to work correctly. If other BPS options are required, refer to “Setting the DIP switches” for more information.

Figure 27: Switch settings

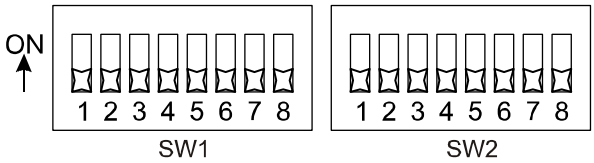

Conventional visible and audible circuit notification

Figure 28: Conventional visible and audible circuit notification

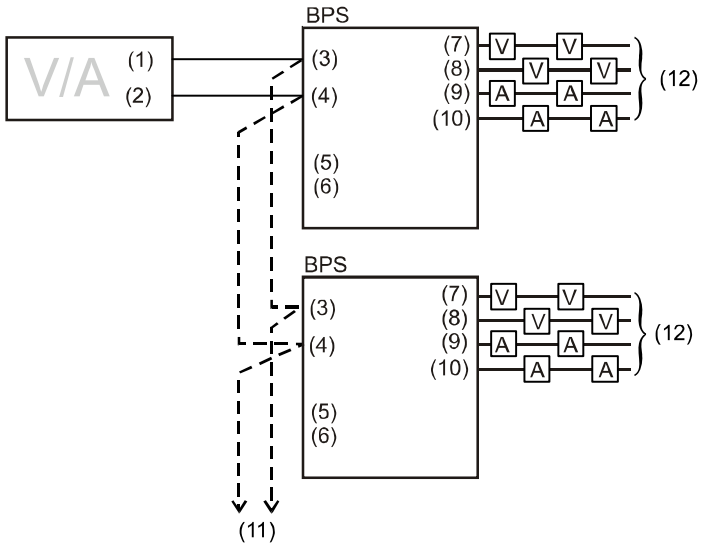

Legend

(1) NAC visible circuit
(2) NAC audible circuit
(3) Sense 1
(4) Sense 2
(5) Mode: COR
(6) NACs: SF
(7) NAC 1
(8) NAC 2
(9) NAC 3
(10) NAC 4
(11) To BPS, or EOL resistor
(12) To next device or EOL resistor

Note: The maximum number of BPSs that can be connected on a single NAC from sense circuit to sense circuit is limited by available current and wire run length.

DIP switch settings for this application

Each BPS DIP switch can be set this way for the application to work correctly. If other BPS options are required, refer to “Setting the DIP switches” for more information.

Figure 29: Switch settings

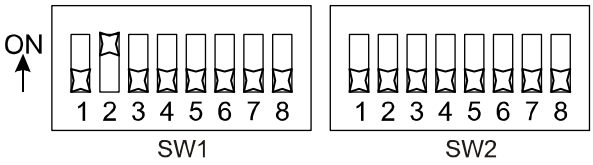

Conventional visible and audible circuit to Genesis notification

Figure 30: Conventional visible and audible circuit to Genesis notification

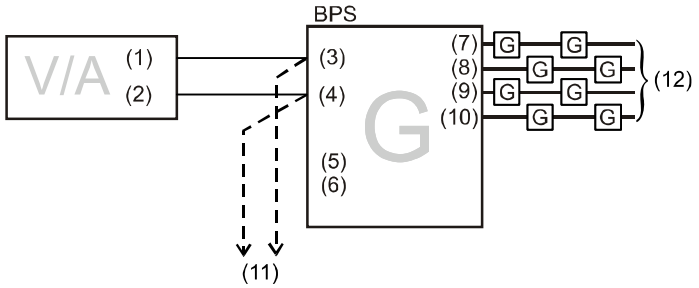

(1) NAC visible circuit
(2) NAC audible circuit
(3) Sense 1
(4) Sense 2
(5) Mode: GM
(6) NACs CONT
(7) NAC 1
(8) NAC 2
(9) NAC 3
(10) NAC 4
(11) To next device or EOL resistor
(12) To BPS, or EOL resistor

Note: The maximum number of BPSs that can be connected on a single NAC from sense circuit to sense circuit is limited by available current and wire run length.

DIP switch settings for this application

BPS DIP switches can be set this way for the application to work correctly. Refer to “Setting the DIP switches” for other options.

Figure 31: Switch settings

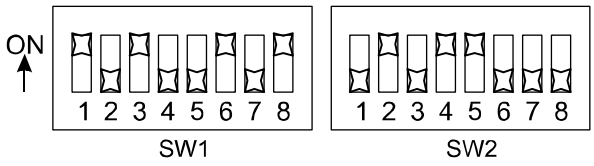

Conventional audible or visible circuit to Genesis notification

Figure 32: Conventional audible or visible circuit to Genesis notification

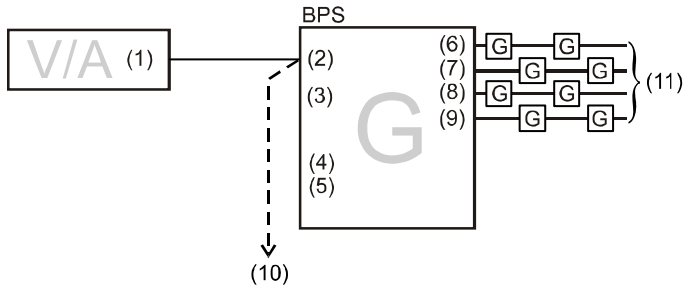

(1) Visible or audible circuit
(2) Sense 1
(3) Sense 2
(4) Mode: COR
(5) NACs: CONT
(6) NAC 1
(7) NAC 2
(8) NAC 3
(9) NAC 4
(10) To BPS, or EOL resistor
(11) To next device or EOL resistor

Note: The maximum number of BPSs that can be connected on a single NAC from sense circuit to sense circuit is limited by available current and wire run length.

DIP switch settings for this application

BPS DIP switches can be set this way for the application to work correctly. Refer to “Setting the DIP switches” for other options.

Figure 33: Switch settings

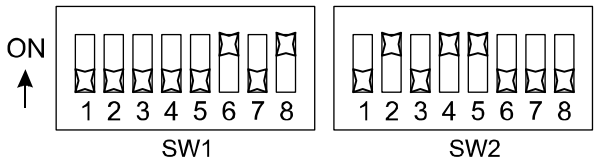

Genesis visible circuit and conventional audible circuit to Genesis notification

Figure 34: Genesis visible circuit and conventional audible circuit to Genesis notification

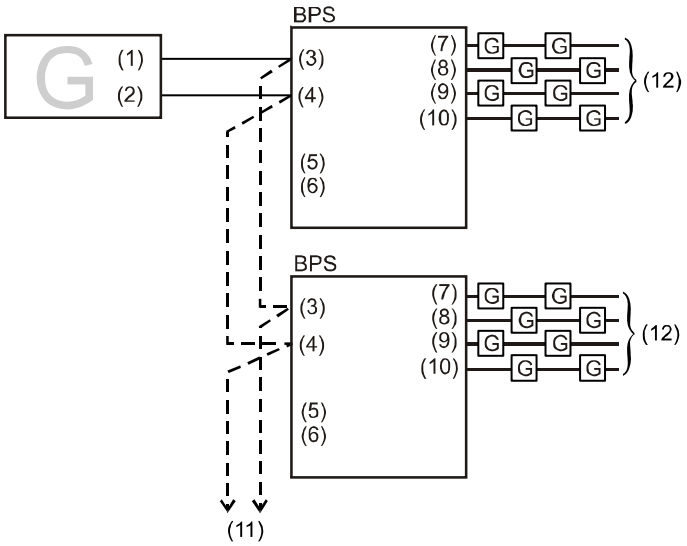

(1) NAC visible circuit
(2) NAC audible circuit
(3) Sense 1
(4) Sense 2
(5) Mode: GM
(6) NACs: SF
(7) NAC1
(8) NAC 2
(9) NAC 3
(10) NAC 4
(11) To next BPS, or EOL resistor
(12) To next device or EOL resistor

Note: The maximum number of BPSs that can be connected on a single NAC from sense circuit to sense circuit is limited by available current and wire run length.

DIP switch settings for this application

BPS DIP switches can be set this way for the application to work correctly. Refer to “Setting the DIP switches” for other options.

Figure 35: Switch settings

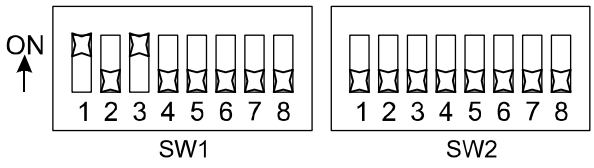

Conventional split mode circuit with fault tolerance notification

Figure 36: Conventional split mode circuit with fault tolerance notification

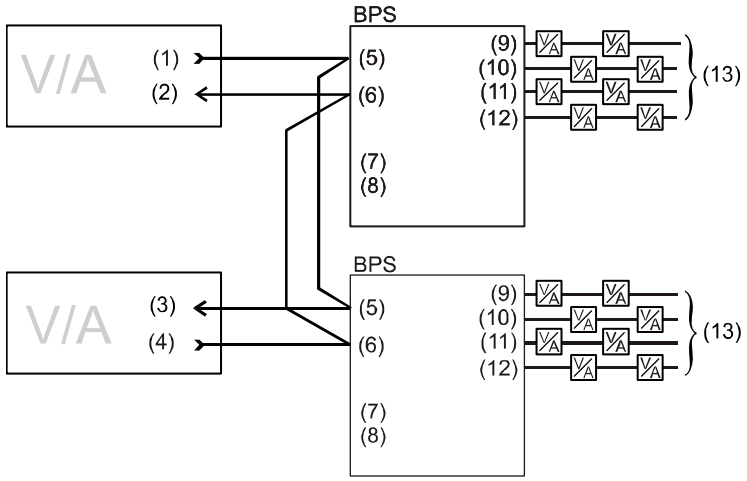

Legend

(1) Primary visible or audible circuit,
(2) To next BPS, or EOL resistor
(3) To next BPS, or EOL resistor
(4) Secondary visible or audible circuit
(5) Sense 1
(6) Sense 2
(7) Mode: COR
(8) NACs: SF
(9) NAC1
(10) NAC 2
(11) NAC 3
(12) NAC 4
(13) To next device or EOL resistor

Notes

- The maximum number of BPSs that can be connected on a single NAC from sense circuit to sense circuit is limited by available current and wire run length.
- Fault tolerance can be increased by using Class A wiring.

DIP switch settings for this application

BPS DIP switches can be set this way for the application to work correctly. Refer to “Setting the DIP switches” for other options.

Figure 37: Switch settings

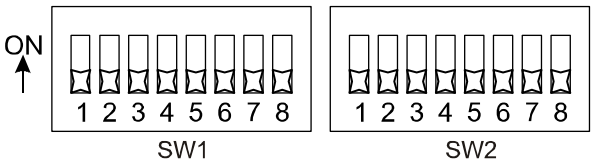

Genesis split mode circuit with fault tolerance notification

Figure 38: Genesis split mode circuit with fault tolerance notification

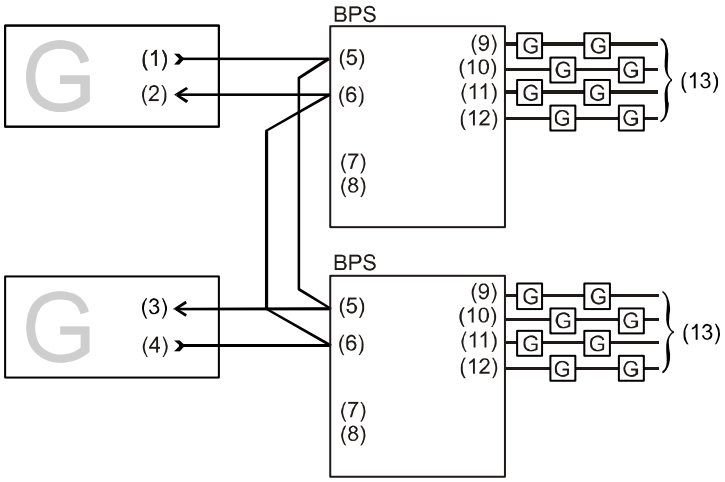

Legend

(1) Primary visible or audible circuit
(2) To next BPS, or EOL resistor
(3) To next BPS, or EOL resistor
(4) Secondary visible or audible circuit
(5) Sense 1
(6) Sense 2
(7) Mode: COR
(8) NACs: SF
(9) NAC1
(10) NAC 2
(11) NAC 3
(12) NAC 4
(13) To next device or EOL resistor

Notes

- The maximum number of BPSs that can be connected on a single NAC from sense circuit to sense circuit is limited by available current and wire run length.
- Fault tolerance can be increased by using Class A wiring.

DIP switch settings for this application

BPS DIP switches can be set this way for the application to work correctly. Refer to “Setting the DIP switches” for other options.

Figure 39: Switch settings

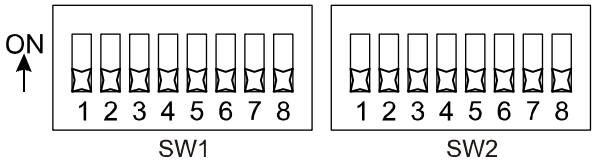

CDR-3 Coder to Genesis notification

Figure 40: CDR-3 Coder to Genesis notification

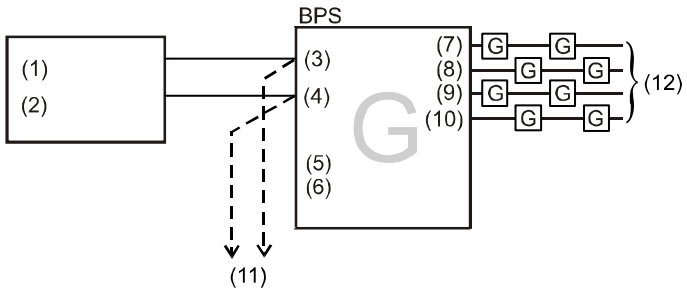

Legend

(1) NAC visible circuit
(2) NAC/CDR-3 audible circuit
(3) Sense 1
(4) Sense 2
(5) Mode: GM
(6) NACs: CONT
(7) NAC1
(8) NAC 2
(9) NAC 3
(10) NAC 4
(11) To next BPS, or EOL resistor
(12) To next device or EOL resistor

Notes

- In order for the audible appliances to follow the CDR-3 coder signals, you must modify each Genesis audible-capable appliance that is connected to a coded NAC. For Genesis G1 Series appliances cut open Circle. For Genesis WG4 horns & horn/strobes, cut jumper JP4. For Genesis GC(F)-HDVM(H) appliances, cut JP1.
- The maximum number of BPSs that can be connected on a single NAC from sense circuit to sense circuit is limited by available current and wire run length.

DIP switch settings for this application

BPS DIP switches can be set this way for the application to work correctly. Refer to “Setting the DIP switches” for other options.

Figure 41: Switch settings

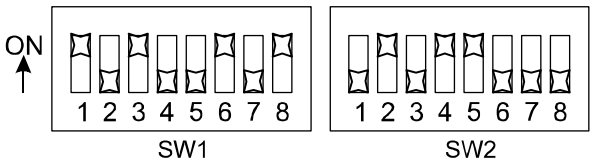

CDR-3 Coder to conventional notification

Figure 42: CDR-3 Coder to conventional notification

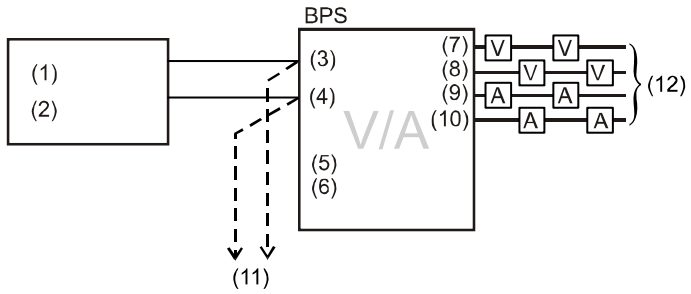

(1) NAC visible circuit
(2) NAC/CDR-3 audible circuit
(3) Sense 1
(4) Sense 2
(5) Mode: ND
(6) NACs: SF
(7) NAC1
(8) NAC 2
(9) NAC 3
(10) NAC 4
(11) To next BPS, or EOL resistor
(12) To next device or EOL resistor

Note: The maximum number of BPSs that can be connected on a single NAC from sense circuit to sense circuit is limited by available current and wire run length.

DIP switch settings for this application

BPS DIP switches can be set this way for the application to work correctly. Refer to “Setting the DIP switches” for other options.

Figure 43: Switch settings

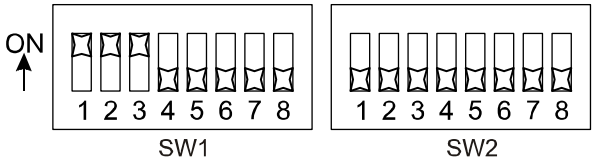

CDR-3 Coder to Genesis visibles and conventional audibles

Figure 44: CDR-3 Coder to Genesis visibles and conventional audibles

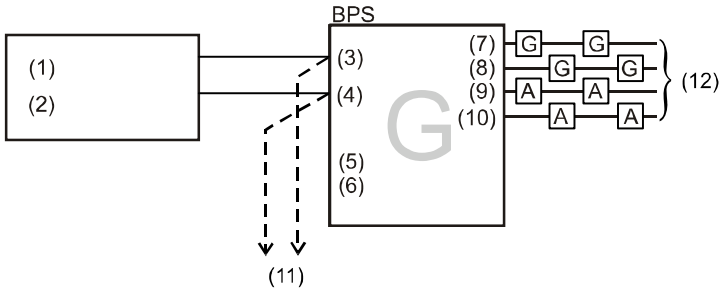

(1) NAC visible circuit
(2) NAC/CDR-3 audible circuit
(3) Sense 1
(4) Sense 2
(5) Mode: ND
(6) NACs: CONT, SF
(7) NAC1
(8) NAC 2
(9) NAC 3
(10) NAC 4
(11) To next BPS or EOL resistor
(12) To next device or EOL resistor

DIP switch settings for this application

BPS DIP switches can be set this way for the application to work correctly. Refer to “Setting the DIP switches” for other options.

NAC1 and NAC2 are configured for continuous mode. NAC3 and NAC4 are configured for sense follow mode. SW2-5 is set to generate a sync pulse on the continuous circuits.

Figure 45: Switch settings

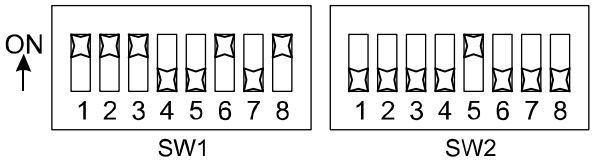

Security

In this application, 24 VDC is converted to 12 VDC for use with security devices.

Figure 46: Security 24 VDC to 12 VDC

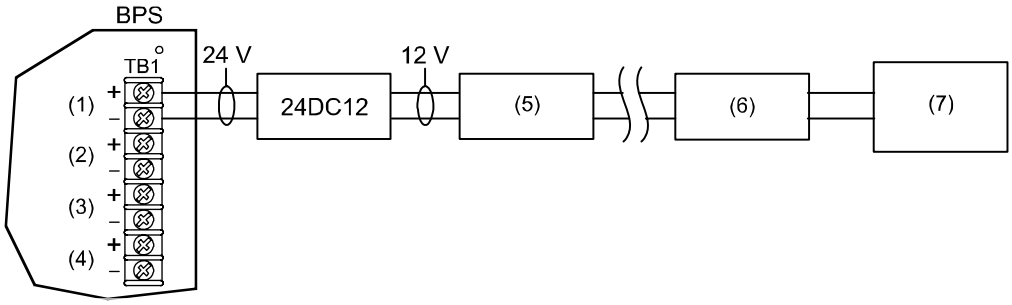

(1) NAC1/AUX1
(2) NAC2/AUX2
(3) NAC3/AUX3
(4) NAC4/AUX4
(5) Security device
(6) Security device
(7) EOL monitoring device

Note: NAC1 must be set for auxiliary. Any of the BPS NACs can be used in auxiliary mode for 12 V security applications.

DIP switch settings for this application

BPS DIP switches can be set this way for the application to work correctly. Refer to “Setting the DIP switches” for other options.

Figure 47: Switch settings

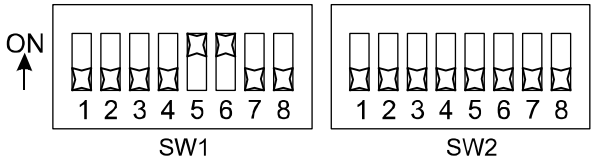

Access control power supply

Figure 48: Access control power supply

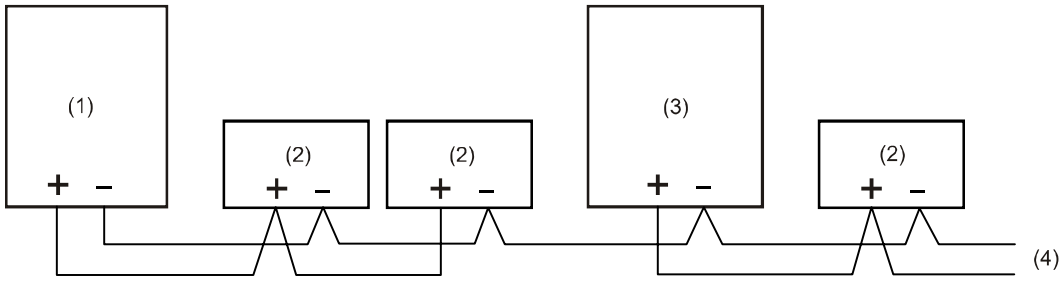

(1) Control panel
(2) Card reader controller
(3) BPS, Disable the BPS’s ground fault jumper (JP3)
(4) To next device or end

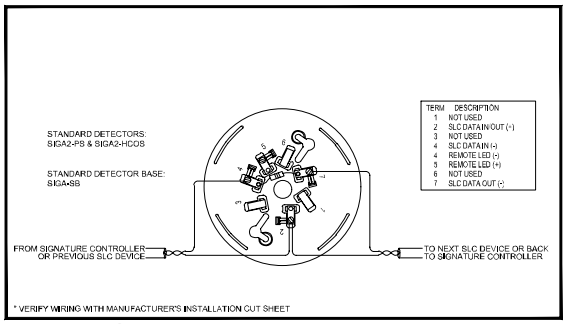

1 SMOKE OR HEAT/CO COMBO DETECTOR WIRING
SCALE: NOT TO SCALE

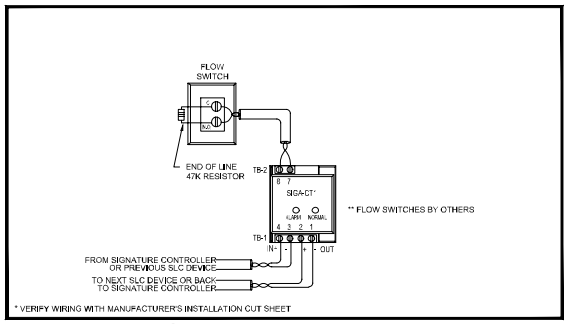

2 FLOW/SWITCH MONITOR WIRING
SCALE: NOT TO SCALE

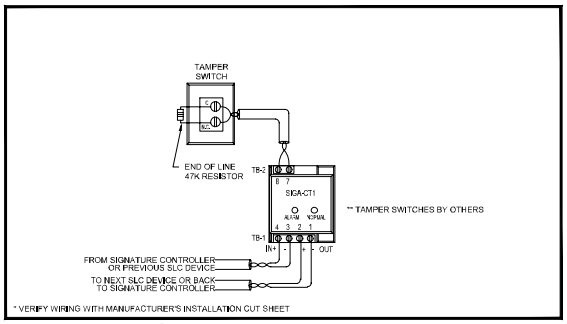

3 TAMPER SWITCH MONITOR WIRING
SCALE: NOT TO SCALE

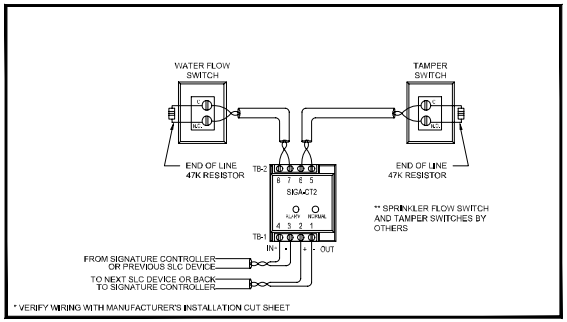

4 FLOW AND TAMPER SWITCH MONITOR WIRING
SCALE: NOT TO SCALE

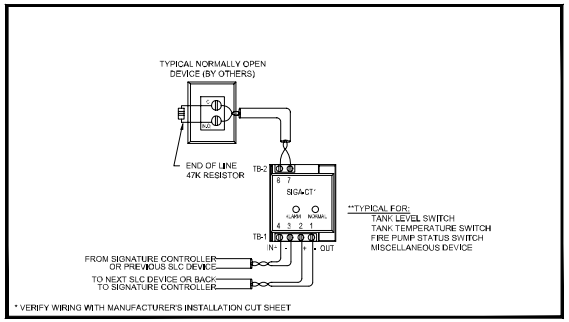

5 TYPICAL SINGLE NORMALLY OPEN DEVICE MONITOR WIRING
SCALE: NOT TO SCALE

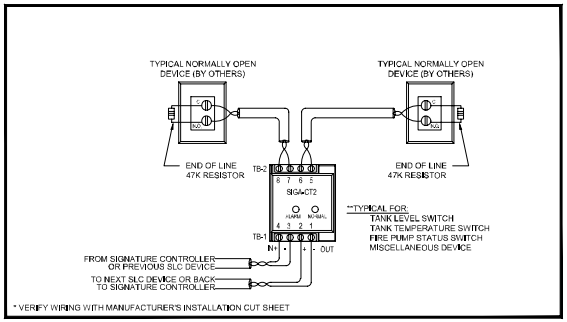

6 TYPICAL DUAL NORMALLY OPEN DEVICE MONITOR WIRING
SCALE: NOT TO SCALE

IF THIS SHEET IS NOT 22"x34" IT IS NOT PLOTTED TO SCALE

BARNARD EJMT TEAM

BARNARD · RONDINELLI · ALP CONSULTING ENGINEERS · Eastern States Fire Protection Co. · BCER Engineering · Sturgeon Electric

EISENHOWER/JOHNSON MEMORIAL TUNNEL
FIXED FIRE SUPPRESSION SYSTEM
DESIGN BUILD PROJECT
Project No. C0703-360 Subaccount 17810
RECORD DRAWINGS - 2015-11-16

Revisions			
Num	Description	Date	

DRAWN BY: B.T.L. CHECKED BY: A.E.E.Jr.

FIRE ALARM
DEVICE WIRING DETAILS

Drawing Number
FA6.11

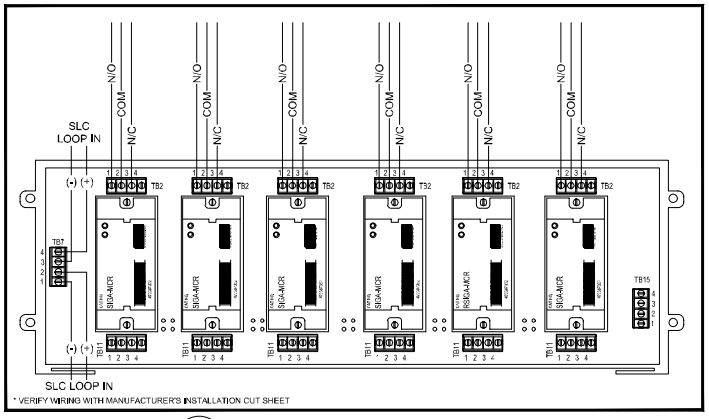

1 TYPICAL SIGA-UIO WITH (6) SIGA-MCR WIRING
SCALE: NOT TO SCALE

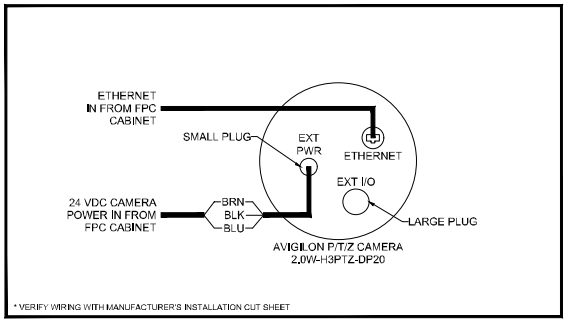

2 TYPICAL PAN/TILT/ZOOM CAMERA WIRING
SCALE: NOT TO SCALE

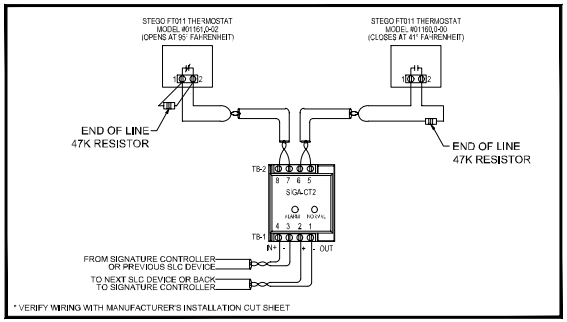

3 CABINET TEMPERATURE THERMOSTAT MONITOR WIRING
SCALE: NOT TO SCALE

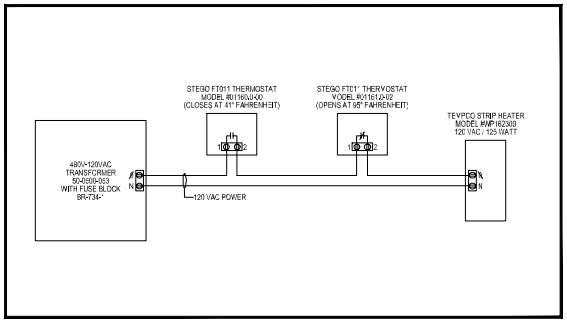

4 CABINET TEMPERATURE CONTROL WIRING
SCALE: NOT TO SCALE

IF THIS SHEET IS NOT 22"x34" IT IS NOT PLOTTED TO SCALE

BARNARD EJMT TEAM

BARNARD · RONDINELLI · ALP CONSULTING ENGINEERS · Eastern States Fire Protection Co. · BCER Engineering · Sturgeon Electric

EISENHOWER/JOHNSON
MEMORIAL TUNNEL
FIXED FIRE SUPPRESSION SYSTEM
DESIGN BUILD PROJECT
Project No. C0703-360 Subaccount 17810

RECORD DRAWINGS - 2015-11-16

Num	Description	Date
Revisions		

DRAWN BY: B.T.L. CHECKED BY: A.E.J.

FIRE ALARM
DEVICE WIRING DETAILS

Drawing Number
FA6.13

EDWARDS
A UTC Fire & Security Company

FireWorks System Control Printed Help

Content

System Control Help 6
Access Group Configuration dialog 6
ACDB/FireWorks Interface Configuration dialog 7
Acknowledging events 8
Activating the drill command 8
Assigning a screen layout to an access group 9
Assigning web client permissions to an access group 9
Basic system operation 10
Branching between maps 11
Browser display 11
Button definitions 12
Button definitions 13
Button definitions 14
Button definitions 15
Button definitions 16
Camera display 17
Card information dialog 19
Card information search dialog 19
Change password dialog 19
Changing a password 20
Changing the banner title 20
Changing the font size 20
Changing to a different language 21
Clearing events from the All Events tab 21
Clearing receiver account events 21
Event data descriptions 22
Command Status dialog 22
Command status 23
Commands dialog 24
Configure automatic printing dialog 24
Configure Event Action/Event List Windows dialog 25
Configuring a new user account 25
Configuring access groups 26
Configuring automatic printing of events 27
Configuring the ACDB/FireWorks interface 28
Contacting technical support 28
Controlling the camera's iris 29
Creating a custom report 29
Creating a partition status report 30
Creating a scheduled report 30
Customizing a layout 31
Customizing event messages displayed in the Event Action window 31
Customizing events displayed in the Event List window 32
Deleting a custom report 33
Deleting a layout 33
Deleting a scheduled report 34
Deleting a user account 34
Deleting an access group 34
Devices dialog 35
Devices in a device TSA 35

Devices in an device icon 37
Diagnostic Status dialog 38
Diagnostic status 38
Diagnostics tab 39
Disabling and enabling a scheduled report 40
Displaying a picture file 40
Displaying a state's active devices 41
Displaying a web page 41
Displaying an HTML file 42
Displaying card information 42
Displaying event messages 43
Displaying log entries 43
Displaying maps 44
Displaying titles in the video display area 44
Editing a custom report 45
Editing a scheduled report 45
Editing access groups 45
Editing all email actions 46
Editing email addresses 46
Editing labels and descriptions 47
Editing user accounts 47
Entering or editing extended messages 48
Entity labels dialog 49
EST2/FCC/IRC3 reports tab 49
EST3 command types 50
EST3 Reports tab 54
Event Action display 55
Event colors 57
Event List display 58
Event message overview 59
Event operation 60
Event operation 60
Event operation 60
Event type descriptions 61
Executing a command icon 67
Executing a command TSA 67
Exiting from System Control 68
Extended message editor dialog 68
Filter settings dialog 68
FireWorks Watchdog Card Status dialog 69
Focusing a camera 69
Glossary 70
Hiding and showing TSAs 79
History tab 79
Icon colors 80
Icon overview 81
Icon types 81
Image display 81
IRC-3/FCC/EST2 command types 82
Issuing a partition command 83
Issuing a system command 83
Key features of System Control 84

Keyboard shortcuts 85
Layout Manager dialog 85
LED definitions 86
Logging on and off 87
Logon/Logoff dialog 87
Making a log entry 88
Map Display terminology 88
Map display 89
Map tree dialog 91
Menu bar options 91
Navigating the system 94
Net Module Status 94
Net Module Status 95
Node Status dialog 95
Node status 96
Opening a layout 97
Opening a window display 97
Other command types 98
Overview - Map Display 98
Overview - Event List window 99
Overview - Event Action window 100
Overview - System Commands 101
Overview - Camera Display 101
Overview - Image Display 102
Overview - User Manager 103
Overview - Partition Commands 104
Overview - Browser Display 104
Overview - Layout Manager 105
Panning and tilting a camera 106
Partition commands dialog 106
Playing a movie file 107
Predefined layouts 107
Print dialog 111
Printer Status dialog 112
Printer status 112
Printing a report 113
Printing event information 113
Receiver event contact lookup and password authentication 113
Report Application dialog 114
Report descriptions 115
Resetting the system 116
Running a report 117
Scheduled Reports dialog 117
Search by address 118
Search by label 119
Searching in a report 120
Selecting a camera sequence 121
Selecting a camera 121
Selecting a switcher 122
Selecting an event 123
Selecting preset camera positions 123
Setting filters for a report 124

Setting the camera's speed 124
Silencing an alarm 125
Silencing the panel 125
Silencing the workstation 126
Sizing a window 126
Sizing columns 127
Sorting lists by column 127
Sorting report data 127
Starting the Report application 128
Status bar information 128
Synchronizing the display of system startup events 129
System Commands dialog 130
System Control overview 130
Tab definitions 131
Tab definitions 132
Tour of the System Control window 132
TSA acknowledgment 133
TSA colors 134
TSA overview 134
TSA types 135
User configuration dialog 135
User manager dialog 136
User privileges 136
Using the Find (search) function 139
Using the help manual 140
Using the online help system 140
Viewing a report that ran 141
Viewing an empty report template 141
Viewing icon information 142
Viewing the status of a partition 142
Viewing TSA information 142
Watchdog card status dialog 143
Watchdog Card status 143
Zooming a camera 144
Zooming in and out 144

Index 145

System Control Help

Welcome to the Help for FireWorks System Control version 1.60. This information is intended to support you while you use System Control to configure your FireWorks system.

P/N 7350013 • REV 2.0 • ISS 06OCT10

© 2010 UTC Fire & Security. All Rights Reserved.

Access Group Configuration dialog

Use the Access Group Configuration dialog box to define the set of features and functions to which different types of user have access. For example, the Admin (default) access group grants access to all features and functions while the No Access (default) access group does not grant access to any features or functions.

Note: You cannot change or delete default access groups.

Refer to User privileges for details on access privileges for each group.

Access Groups: A list of all defined groups including the default groups. New groups are added to the list after you click Apply.

Label: The name used to identify the group.

Select a Template Access Group: The default access group you want to use as a template for configuring a new access group.

Description: A brief description of the group or the group account.

Applications tab: The set of FireWorks applications to which you want a user to have access.

System Control tab: The set of System Control features and functions to which you want a user to have access.

User Manager tab: The set of User Manager features and functions to which you want a user to have access.

Partition Reports tab: The set of partitions to which you want a user to have access.

EST3 Commands tab: The set of EST3 commands to which you want a user to have access.

EST2/FCC/IRC3 Commands tab: The set of EST2, FCC, and IRC-3 commands to which you want a user to have access.

Other Commands tab: The set of other commands to which you want a user to have access.

Event List Window tab: The set of data displayed in the Event List window to which you want a user to have access.

Event Action Window tab: The set of data displayed in the Event Action window to which you want a user to have access.

Default Group Is: The group assigned as the default access group.

Delete Group button: Deletes the selected group from the Access Groups list.

Make Default button: Assigns the selected group as the default group. The User Manager automatically assigns the default access group to new users and to users whose assigned access group has been deleted.

Apply button: Saves all of the changes you made without closing the dialog box.

ACDB/FireWorks Interface Configuration dialog

Use the ACDB/FireWorks Interface Configuration dialog box to set up and configure the location of the ACDB database and specify the card information you want to display for each cardholder. Card information is displayed in the Card Information tab in Event Action.

Note: Only ADMIN level users can configure the ACDB/FireWorks interface information.

Enable ACDB/FireWorks interface check box: Check to turn on the ACDB/FireWorks interface features, such as the Card Information tab in Event Action. If this is not checked, ACDB/FireWorks interface features are disabled.

ACDB database location: The location (path) where the ACDB database file (ACDB2FW.MDB) is located. If the database file is located on a network, it is automatically copied into the FireWorks\ACDB directory with the file name FW_ACDB.MDB. If a network connection does not exist, the ACDB2FW.MDB file must be manually copied into the FireWorks\ACDB directory and renamed to FW_ACDB.MDB. **Note:** If you change the location (path) of the database file, you must restart FireWorks System Control.

Browse button: Opens a dialog box so that you can navigate to the location of the ACDB database.

Database update monitoring - check every ___ seconds: Determines how often FireWorks checks for an updated ACDB database file. The time period can be set for 60 to 3,600 seconds (one hour). **Note:** If you change the monitoring time, you must restart FireWorks System Control.

Card information display

Available fields: A list of fields (information) that can be displayed for each card holder in the Card Information tab in Event Action.

Assign and Unassign buttons: Assigns the selected field to the Displayed fields list or unassigns (removes) the field from the Displayed fields list.

Assign All and Unassign All buttons: Assigns all fields to the Displayed fields list or unassigns (removes) all fields from the Displayed fields list.

Displayed fields (in order): A list of the fields (information) that will be displayed for each card holder in the Card Information tab in Event Action.

Arrow buttons: Allows you to reorder the fields to the layout you want. Select the field and then click the up or down arrow to reposition the field.

Apply button: Saves all of the changes you made without closing the dialog box.

Cancel button: Cancels (removes) the information you are currently entering. It does not remove information that was already applied or added. Also closes the dialog box.

Acknowledging events

The Acknowledge button is located in the Event Action display. This button is not active until an event message is displayed that requires acknowledgment. It is used to notify the system that you are aware of and have recognized the device event that resulted in the current event message.

When an event message is waiting for acknowledgment, the workstation beeps and the device TSA or icon in Map Display flashes with a color that is associated with the event type.

There are three ways to acknowledge an event:

- By clicking the Acknowledge button in Event Action
- By pressing Shift + F1 on the keyboard
- By clicking Acknowledge Current Event from the Functions menu

To acknowledge an event:

1. Review the event in Event List, Event Action, and Map Display. Make sure you have a full understanding of what is taking place in the system.
2. Click the Silence Workstation button to silence the internal buzzer.
3. Log any needed information using the Log Entry tab in Event Action.
4. Acknowledge the event using one of the methods described above.

Activating the drill command

The Drill command forces all audible and visible notification appliances connected to the node (panel) to the ON condition.

Caution: Drilling your system simulates an alarm condition. Make sure all precautions and procedures are in place before using the drill command.

To activate the drill command:

1. Click the Drill button.
2. Select the node (panel) to receive the drill command or click Select All.
3. Click Issue Command.

Notes

- During a drill at an EST2/FCC/IRC3 system, FireWorks can do the following (without positive feedback at the FireWorks workstation). FireWorks does not know that the system is in drill or that the system drill is silenced.
- Drill can be toggled ON/OFF.
- Alarm silence can be toggled.
- If a drill is issued at an EST2/FCC/IRC3 system, FireWorks does not receive the drill and does not know that the EST2/FCC/IRC3 system is in drill.
- For all receiver nodes, all common controls, such as reset, silence, drill, etc. are disabled.

Assigning a screen layout to an access group

When you are setting up the privileges for System Control, you can select the default layout for that user group. When a member from the user group logs on to System Control, the selected layout will be used. A custom layout can be configured or one of the predefined layouts can be used for any access group.

Note: The default layout used is the "four-quadrant" view if nothing else is selected.

To change the default layout of an access group:

1. From the Applications menu, click User Manager.
2. Click Access Group Configuration.
3. Select an access group or create a new access group.
4. Click the Applications tab.
5. From Select Access Group's Default Window Layout, select the desired layout for the access group.
6. Click Apply.
7. Click Close.

Assigning web client permissions to an access group

To access FireWorks from the Web Client application, permissions must be established. The permissions must be assigned to an access group. Each access group can have permission to access FireWorks using the Web Client. When activated, every member of the access group is granted permission. If you only want one or two individuals to have permission, you must create a separate access group for these individuals and then grant the access group permission.

To assign web client permissions to an access group:

1. From the Applications menu, click User Manager.
2. Click Access Group Configuration.

3. Select an access group or create a new access group.
4. Click the Applications tab.
5. From Web Client Connection, click Allow Web Client Connection.
6. Click Apply.
7. Click Close.

Basic system operation

Normal operation

During normal operation, the New Events tab in Event List is empty, the site map (primary map) is displayed in Map Display, and the green LED is lit in the status bar. Any previous events that have been reviewed and acknowledged are displayed in the All Events tab.

The site map usually represents the area protected by the fire alarm system, card access system, security system, and CCTV system. The site map shows the overall system coverage area, consequently it reveals the least amount of detail. More detailed maps are available that provide additional information about your site or incoming event.

Event operation

When an event occurs in your system, a number of functions take place automatically. Each individual system performs a number of control functions to condition the area it services, including operating audible and visual notification appliances, closing doors, etc. These actions are performed independently of the FireWorks system. At the same time, the system sends the device event information to its FireWorks workstation for processing as follows:

1. The Event List displays information about the event or point that is waiting to be acknowledged. The events are color-coded to show their type. Each line is a single event and displays the event type, date and time, device, address, location, and map.
2. The workstation sounds double tones (beeps).
3. The device TSA in Map Display flashes either red (alarm), orange (security), yellow (trouble, supervisory, monitor), or green (restore).
4. The Device Map button becomes active in Map Display.
5. The Acknowledge button in Event Action becomes active.
6. The associated event message is displayed in Event Action.
7. The associated event LED flashes in Event Action.
8. The status bar at the bottom of the System Control window shows the type of event: alarm (in red), trouble (in yellow), or restoration (in green).

   The status bar message changes as messages are acknowledged. When there are no messages to be acknowledged, the status bar clears.
9. The alarm message is logged in the History file and printed.

Note: All off-normal conditions require acknowledgment by the System Control user. Make sure you review the event and understand what is taking place in your system before you acknowledge the event.

In the unlikely event that a device that has not been entered into the FireWorks database changes state, the following occurs:

- No TSAs flash in Map Display.
- A "device not defined" message appears in the Event List display.
- The Device Map button remains inactive (is dimmed).

Once the event message has been acknowledged, the displayed message (with a corresponding time stamp) is immediately logged in the History file and sent to the printer.

Branching between maps

Map branching is the process of switching to a more detailed map by clicking a TSA. When you click the TSA, a map of the area the TSA surrounds is displayed. This map may also contain a TSA that branches to another map that contains more detailed information about your site.

Once you have navigated to the desired map and reviewed all necessary information, you can branch back to previous maps by using the map navigation buttons or selecting the desired map from the map list.

Browser display

Use the Browser window to display HTML files or connect to the Internet to view web pages.

Browser drop-down menu: Contains HTML files or web addresses that you can display. Click the drop-down arrow to select an HTML file or web address from the list.

Toolbar buttons	
Button	**Definition**
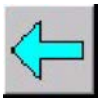	Back: Moves back to the HTML file or web page previously displayed.
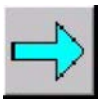	Forward: Moves forward to the HTML file or web page you viewed before clicking the Back button.
	Stop: Stops the HTML file or web page from opening.

	Refresh: Updates the HTML file or web page to the latest version.
	Home: Returns to the web page that appears when you open the HTML Browser.
	Search: Launches the search engine for the Internet.
	Browse HTML files: Opens the "Select HTML File to Display" dialog box so you can select the file you want to display.

Button definitions

Map Display contains tool bar buttons that let you navigate through your maps, zoom in or out on a map, display a map tree of all maps associated with your system, and display an overview of a map you may be zoomed in on. The following are descriptions of each button.

Button	Definition
	Map Tree: Displays an explorer view of all maps, TSAs, devices, and text associated with your system. Maps, TSAs, devices, and text can be accessed directly by clicking the desired item.
	Parent Map: Branches up one map level to the current map. This is like following a TSA link in reverse, from destination map to source map. (Keyboard shortcut F9 and on the Functions menu.)
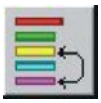	Previous Map: Switches back to the map previously displayed. Clicking this button repeatedly toggles the display between the last two maps displayed.
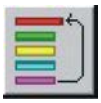	Site Map: Branches directly to the site map from any location in the map system. The site map is the main map which is displayed when no active alarms are present. (Keyboard shortcut F7 and

	on the Functions menu.)
	Device Map: Branches directly to the map with the highest priority active device from any location in the map system. (Keyboard shortcut F5 and on the Functions menu.)
	Zoom In: Enlarges the viewing size of a map. Zooming in is much like moving toward a picture to get a better look at it.
	Zoom Out: Reduces the viewing size of a map. Zooming out is much like moving away from a picture to get a better look at it.
	Zoom Select: Used to draw a box around an area on a map to zoom in
	Zoom 1-to-1: Displays the actual size of the map
	Map Overview: Displays a pop-up window of the entire map. This can be helpful if you are zoomed in to a certain area on the map and want to see an overview of the whole map at the same time.

Button definitions

Event Action contains tool bar buttons that let you acknowledge system events, alarm silence, local silence, drill, reset the system, toggle audio files on and off, and get help. The following are descriptions of each button.

Button	Definition
	Acknowledge: Notifies System Control that you are aware of and have recognized the device event that resulted in the current event message. (Keyboard shortcut Shift + F1 and on the Functions menu.)

	Alarm Silence: Silences the audible notification appliances connected to the system
	Panel Silence: Silences the control panel's internal buzzer
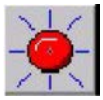	Drill: Forces all audible and visual notification appliances to the ON state
	Reset: Returns a control panel to normal if all of its devices have been restored
	Contacts: Opens the Contacts dialog box, which is used to contact and authenticate receiver event contacts. It is only enabled when a receiver event is selected that has associated contacts.
	Silence Workstation: Silences the workstation's internal buzzer and turns an event associated audio (AVI) file ON and OFF

Button definitions

Image display contains tool bar buttons that let you control movie (AVI) files and browse to select images to display. The following are descriptions of each button.

Button	Definition
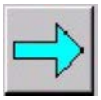	Play: Plays the selected movie file
	Stop: Stops the movie from playing
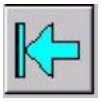	Restart: Restarts (replays) the movie from the beginning
	Browse image files: Allows you to select the image file that you want to display

Button definitions

Camera display contains toolbar buttons that let you control the CCTV cameras connected to the workstation. Buttons are disabled if the camera you are using does not have that functionality. The following are descriptions of each button.

Button(s)	Definition
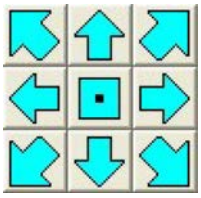	Pan and Tilt: Moves the camera left and right or up and down. The middle button stops all motion.
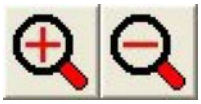	Zoom In and Out: Zooms the camera for a better, more detailed look at something
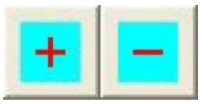	Focus In and Out: Focuses the camera for a clearer picture
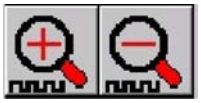	Digital Zoom: Only supported on certain cameras. Refer to the documentation that came with your camera for more information.
	Image Still: Displays a still image from the video feed and allows you to save the image to your desired location
	Image Capture: Captures a still image from the video feed
	Show/Hide: Used to show and hide the camera setting and control buttons
	Camera Speed: Adjusts the pan and tilt speed of the camera
	Preset: Allows you to select frequently used camera positions

	Iris: Controls the amount of light that enters the camera's lens
	Sequence: Used to select a predefined pattern the camera follows
	Titles: Used to display caption titles on the video display. Only supported on certain cameras. Refer to the documentation that came with your camera for more information.
	AGC: Automatic gain control. Only supported on certain cameras. Refer to the documentation that came with your camera for more information.

Button definitions

The Browser contains toolbar buttons that let you move back and forth between HTML files or web pages, search the Internet, and refresh the page display. The following table gives a description of each button.

Button	Definition
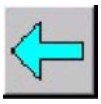	Back: Moves back to the HTML file or web page previously displayed.
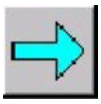	Forward: Moves forward to the HTML file or web page you viewed before clicking the Back button.
	Stop: Stops the HTML file or web page from opening.
	Refresh: Updates the HTML file or web page to the latest version.
	Home: Returns to the web page that appears when you open the HTML Browser.

	Search: Launches the search engine for the Internet.
	Browse HTML files: Opens the "Select HTML File to Display" dialog box so you can select the file you want to display.

Camera display

Use the Camera window to display all CCTV video. CCTV cameras can be controlled using the pan/tilt, focus, and zoom buttons if your camera has these functions. A drop-down list shows all of the cameras in your system for ease in selecting any desired camera.

Switcher selection list: Contains all of the switchers in your CCTV system. Click the drop-down arrow to select a switcher from the list.

Camera selection list: Contains all of the cameras in your CCTV system. Click the drop-down arrow to select a camera from the list.

Button	Definition
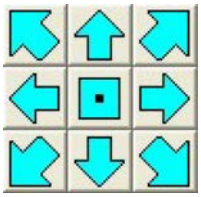	Pan and Tilt: Moves the camera left/right or up/down. The middle button stops all motion.
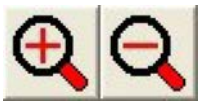	Zoom In and Out: Zooms the camera for a better, more detailed look at something
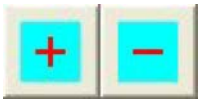	Focus In and Out: Focuses the camera for a clearer picture
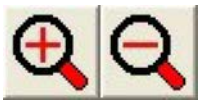	Digital Zoom: Zooms on an image by enlarging the selected area. Only supported on certain cameras.
	Image Still: Displays a still image from the video feed

	Image Capture: Captures a still image from the video feed
	Show/Hide: Used to show and hide the camera setting and control buttons
	Camera Speed: Adjusts the pan and tilt speed of the camera
	Preset: Allows you to select frequently used camera positions
	Iris: Controls the amount of light that enters the camera's lens
	Sequence: Used to select a predefined pattern the camera follows
	Titles: Used to display caption titles on the video display. Only supported on certain cameras. Refer to the documentation that came with your camera for more information.
	AGC: Automatic gain control. Only supported on certain cameras. Refer to the documentation that came with your camera for more information.

Card information dialog

The Card Information dialog box displays all of the card access information that is associated with the selected card information record.

Card information: Card access information that is associated with the selected card information record.

Card photograph: A picture of the cardholder.

Print button: Prints the card information and picture on the graphics printer.

Close button: Closes the card information dialog box.

Card information search dialog

Use the Card Information Search dialog box to search for and select cardholder records.

Name: The name of the cardholder you are searching for.

Card #: The card number for the cardholder you are searching for. This can be the card number that appears on the back of the card or the derived card number that appears in a history report.

Search button: Searches for cardholder records matching your search criteria.

Matching records found: A list of the records that were found to match your search criteria.

Select record button: Displays the selected cardholder's card information in the Card Information dialog box.

Cancel button: Cancels (removes) the information you are currently entering. It does not remove information that was already applied or added. Also closes the dialog box.

Change password dialog

Use the Change Password dialog box to change a user's password.

User: The user that is logged on to the workstation.

Current password: The user's current password.

New password: The new desired password.

Verify new password: The new password reentered for verification.

Apply button: Saves all of the changes you made without closing the dialog box.

Changing a password

The password is a coded word used to allow you access to the system. An asterisk (*) appears in place of each letter in your password. At any time, the user can change their logon password. Changing a password is accessible by all built-in user accounts in User Manager.

Note: You must be the logged on to the system to change your password.

To change a password:

1. From the Applications menu, click User Manager.
2. Click Change Current User Password.
3. In Current Password, type the password you are currently using.
4. In New Password, type the new password that you would like to use.

   Note: You can use any combination of letters and numbers, but letters must be uppercase.
5. In Verify New Password, retype your new password.
6. Click Apply.
7. Click Close.

Changing the banner title

When there are no new events in your system, "FireWorks Banner, Configurable" is displayed at the top of the Event Message tab. This is the default banner used to indicate that your system is up and running.

If desired, the banner can be changed to any word or short phrase. You may want to use the name of your company or building, for example.

To change the banner title:

1. Right-click on the banner.
2. Click Edit banner.
3. Type a new word or phrase.
4. Click OK.

Changing the font size

You may want to change the font size (point size) of the text messages displayed on the Event Message and Log Entry tabs.

To change the font size:

1. Right-click on the Event Message tab.

2. Click Font Size.
3. Select the point size that you want the text to display in.

Note: The font size also changes for the Log Entry tab text.

Changing to a different language

When you change languages, FireWorks menus, displays, and dialog boxes change to the language you select. There are two ways to change to a different language:

- By selecting a different language from the Functions menu
- By switching to your alternate language

To select a different language:

1. From the Functions menu, click Change language.
2. Select the language that you want to use.

To switch to your alternate language:

1. From the Functions menu, click Alternate Language or press Shift+F4.
2. Your display switches to the alternate language that was assigned to your user account.

Clearing events from the All Events tab

The All Events tab displays all of the events that have taken place in your system, including acknowledged events. These events are also stored in History and can be viewed by creating history reports.

Events can be cleared from the All Events tab at any time. You may want to do this to start with a clean list.

To clear events from the All Events tab:

1. Click the All Events tab.
2. Right-click on the list of events.
3. Click Clear Events.

   All of the events are cleared and can be viewed through History reports.

Clearing receiver account events

All active receiver account events can be cleared in FireWorks at one time. When you clear the receiver account events, the system acknowledges and restores the events and places them in the All Events tab.

When you clear all of the active account events, a message is logged to history indicating that the FireWorks operator executed the clearing of all receiver account events. The ability to clear all receiver account events can be controlled by access group.

Note: Receiver events configured as status points and placed on a map as either a device icon or in a device TSA do not display in Event List. The device icon or TSA will go active and report the event. However, you must clear the event in Map Display, not Event List. See the second procedure below.

To clear receiver account events:

1. Select an event from a receiver.
2. Right-click on the event.
3. Click Clear All Events for Account.

To clear a receiver account event configured as a status point in Map Display:

1. Right-click the device icon or device TSA in Map Display.
2. Click Devices.

   The Devices dialog box is displayed.
3. Right-click the event in the list.
4. Click Clear All Events for Account.

Event data descriptions

Each event has a block of information that describes what is taking place in the system. The information is divided into columns. The different columns are:

Type: The type of event (alarm, trouble, supervisory, monitor, security, or restore) taking place.

Date/time: The date and time that the event occurred. This is the workstation computer time.

Device: The label of the device that generated the event.

Address: The address of the device that generated the event.

Location: A brief description of where the device is located.

Map: The map that contains the device that generated the event.

User: The user who is logged on at the time of the event.

Description: The description of the device that generated the event.

Command Status dialog

Commands are actions that are sent to the control panel to make something happen or to control something, such as disabling a smoke detector.

Use the Command Status dialog box to monitor and track the commands you issue to your system. Commands are issued using the System Commands dialog box. Once the command is issued, you can track its status using the following columns:

Command column: Command type (enable, disable, activate, etc.).

Object column: The object (device) that receives the command.

Source column: Where the command originated. This is displayed as the label of an icon or TSA, or can be System Commands.

Node column: The node where the object (device) resides that receives the command.

Status column: Status of the command.

Issued column: When the command was issued.

Completed column: When the command was completed.

Command set column: If the command was part of a command set, the label for the command set is displayed otherwise, this field will be blank.

Clear button: Clears all command records from the dialog box.

Print button: Prints all of the command status records.

Command status

Commands are actions that are sent to the control panel to make something happen or to control something, such as disabling a smoke detector.

The Command Status dialog box allows you to monitor and track the commands you issue to the system. It stores up to 500 commands. The events can be cleared and printed by the user. The most recent commands are always displayed at the top of the list. Once the command queue fills, the oldest commands drop off as new commands are issued.

Commands are issued using the System Commands dialog box. Once they are issued, you can track the command type, where the command was sent from, where the command was sent to, the status of the command, when it was issued, and when it was completed.

Monitoring the status of a command

To monitor the status of a command:

1. From the Status menu, click Command Status or press F3.
2. Monitor the status of the command.
3. Click Cancel or Close to close the dialog box.

Printing the list of commands

To print the list of commands:

1. From the Status menu, click Command Status or press F3.
2. Click Print.

3. Click Cancel or Close to close the dialog box.

Clearing all commands from the dialog box

To clear all commands from the dialog box:

1. From the Status menu, click Command Status or press F3.
2. Click Clear.
3. Click Cancel or Close to close the dialog box.

Commands dialog

Use the Command dialog box to execute the TSA's, icon's or devices's command to your system. When executed, the associated preprogrammed command is sent to the specified fire alarm networks.

Note: All of the commands that are displayed in the Commands dialog box are activated when you click the Execute button. Make sure these are the commands that you want to activate on your system.

Commands at...: The list of commands associated with the TSA, icon, or device that activate upon execution.

Execute button: Executes all of the commands listed.

Cancel button: Cancels (removes) the information you are currently entering. It does not remove information that was already applied or added. Also closes the dialog box.

Configure automatic printing dialog

Use the Configure Automatic Printing dialog box to enable and configure the automatic printing of event information when specific events occur in your system. When configured, the event device map for the event types you select (alarm, trouble, supervisory, monitor, security) prints automatically. You can also automatically print Event Action data when the events take place in your system.

Note: You must have a graphics printer connected to the workstation to automatically print event information.

Enable automatic printing of events: Turns on the ability to automatically print event information.

Select printer: Lists the printers in your system.

Select event type to print: The event types that can be selected for automatic printing.

Print Event Action data with device map: The supporting information for an event, such as the event message is printed along with the device map.

Apply button: Saves all of the changes you made without closing the dialog box.

Cancel button: Cancels (removes) the information you are currently entering. It does not remove information that was already applied or added. Also closes the dialog box.

Configure Event Action/Event List Windows dialog

Use the Configure Event Action/Event List Windows dialog box to configure the content and arrangement of the event data that is displayed in both of these windows. Each field of event data can be displayed or removed from the window and the data fields can be arranged in any order you desire. Each access group can have its own configuration.

Note: Configuring Event Action and Event List windows requires ADMIN level permissions.

Select which access group to change: A list of the defined access groups. Select an access group to assign the Event Action and Event List configuration to. When a member from the access group logs into System Control, the configuration you setup is used for that individual.

Event List Window tab: Used for configuring and arranging the event data fields for the Event List window.

Event Action Window tab: Used for configuring and arranging the event data fields for the Event Action window.

Available Fields: A list of fields that can be displayed for each event that takes place on the system.

Displayed Fields (in order): A list of the fields that are displayed for each event that takes place on the system.

Assign and Unassign buttons: Assigns the selected field to the Displayed fields list or unassigns (removes) the field from the Displayed fields list.

Assign All and Unassign All buttons: Assigns all fields to the Displayed fields list or unassigns (removes) all fields from the Displayed fields list.

Arrow buttons (to the right of Displayed Fields): Allows you to reorder the fields in the arrangement you desire. Select the field and then click the up or down arrow to reposition the field.

Apply button: Saves all of the changes you made without closing the dialog box.

Cancel button: Cancels (removes) the information you are currently entering. It does not remove information that was already applied or added. Also closes the dialog box.

Configuring a new user account

Users are individuals who operate the FireWorks workstation. Each user must have unique identifying characteristics so that the system knows exactly who is operating FireWorks. User accounts have the following characteristics:

- User name
- Password
- Access group member
- Description
- Language

There is one built-in user account: Admin. Admin is the administrator account and should only be used by the FireWorks administrator. All other FireWorks users must be manually entered using the procedure below.

Note: Before FireWorks is fully programmed and operational, the Admin account password should be changed. This way, only the FireWorks administrator can use that account. If an administrator is needed, assign the Administrator access group to the user who needs administrator privileges.

To configure a user account:

1. From the Applications menu, click User Manager.
2. Click User Configuration.
3. Click New User.
4. Type a user name.

   Note: You must use uppercase letters.
5. Type a new password if desired. The default is "PASSWORD" and does not have to be changed.

   Note: You can use any combination of letters and numbers, but letters must be uppercase.
6. Select an access group.
7. Enter a login timeout, if needed.
8. Select the primary and alternate languages.
9. Type a description.
10. Click Apply.
11. Reenter the password.
12. Click OK.
13. Click Close.

Configuring access groups

An access group is a set of access privileges. These access privileges control what features and functions of FireWorks are accessible by users. For example, the administrator group has access to all features and functions in FireWorks.

There are five default access groups already configured for you. These default access groups cannot be edited or deleted. They can only be used "as is" or as templates to set up new groups.

When setting up a new group, simply add or delete privileges in the tabbed sections. The result is a new group that only has access to the features and functions you select. The default access groups are:

- Admin
- Manager
- User
- Web User

- No Access

Refer to User privileges for details on access privileges for each group.

To configure access groups:

1. From the Applications menu, click User Manager.
2. Click Access Group Configuration.
3. In the Access Groups list, click the group you want to configure.

   — or —

   Click <New Access Group> to configure a new group.
4. Type a label (name) for the group.
5. If you are configuring a new access group, in the Select a Template Access Group list, click the access group you want to use as a template.
6. Type a description for the group.
7. Using the different tabbed sections, add or remove privileges.
8. Click Apply.
9. Click Close.

Configuring automatic printing of events

Event information can be printed automatically when paper documentation is needed for archiving or report generation. When configured, the event device map for any event type you select (alarm, trouble, supervisory, monitor, security) prints automatically. You can also automatically print Event Action data when the events take place in your system. You can print information for all of the events that take place in your system or you can select specific event types. For example, you can configure automatic printing of only alarm events.

Note: You must have a graphics printer connected to the workstation to automatically print event information.

To configure automatic printing of events:

1. From the Functions menu, click Configure Auto Print Events/Map.
2. Click Enable Automatic Printing of Events.
3. Select the graphics printer that you want to print to.
4. Select the event type.

   You can select more than one event type to automatically print.
5. Check the Print Event Action Data with Device Map check box if you want to print Event Action data along with the map. Leave it unchecked if only want to print event information (no map).
6. Click Apply.

Configuring the ACDB/FireWorks interface

The ACDB/FireWorks Interface is used to set up and configure the location of the ACDB database and to specify the card information you want to display for each cardholder. Card information is displayed in the Card Information tab in Event Action.

Note: Only ADMIN level users can configure the ACDB/FireWorks interface information.

To configure the ACDB/FireWorks interface:

1. From the Applications menu, click ACDB Interface Config.

   The ACDB/FireWorks Interface Configuration dialog box is displayed.

2. Click Enable ACDB/FireWorks Functionality to turn on the ACDB/FireWorks features. If this is not checked, ACDB/FireWorks interface features are disabled.

3. Click Browse and navigate to the location of the ACDB database file ACDB2FW.MDB.

   If the database file is located on a network, it is automatically copied into the FireWorks\ACDB directory with the file name FW_ACDB.MDB. If a network connection does not exist, the ACDB2FW.MDB file must be manually copied into the FireWorks\ACDB directory and the file name must be changed to FW_ACDB.MDB.

4. Specify how often (in seconds) FireWorks checks the FireWorks\ACDB directory for an updated ACDB database file.

   The time period can be set for 60 to 3600 seconds (one hour). The default is 60 seconds.

5. Select one of the available fields that you want displayed on the Card Information tab.

6. Click Assign.

7. Repeat steps 5 and 6 for each available field that you want to display on the Card Information tab.

8. Sort the displayed fields to your desired order using the arrow buttons.

   Click a field and then click the up or down arrow to move the field to the desired position.

9. When you have finished assigning and sorting the fields, click Apply.

10. Restart FireWorks if you changed the database location or monitoring time. You *do not* need to restart FireWorks if you only changed the card information display fields.

Contacting technical support

The technical support dialog information can be edited by the administrator to change the distributor's phone numbers, addresses, etc. This information is for the user when assistance is required.

To edit the contact information:

1. From the Help menu, click Technical Support.

2. Right-click in the dialog box.

3. Click Edit Support Message.

4. Enter your contact information.

5. Click OK.

Controlling the camera's iris

Some cameras have an iris that can be controlled. The iris controls the amount of light that enters the camera's lens. The Iiris Min, Max, and Center buttons allow you to open or close the iris to allow the right amount of light into the lens to get the best image.

Note: Only one camera can be controlled at a time.

To open or close a camera's iris:

1. Select a camera.

   Refer to Selecting a camera for more information.

2. Click Show if the camera setting and control buttons are not already displayed.
3. Click the Iris Min, Max, or Center buttons to adjust the brightness of the image.

   Note: Center is only available on certain cameras. Refer to the documentation that came with your camera for more information.

4. Click Hide to hide the camera setting and control buttons.

Creating a custom report

Reports are used to view event records that describe what has taken place in your system. You can create your own custom reports based on the predefined reports along with filter and sort criteria and add them to the list of available custom reports. These reports can then be run just like any other report. By creating your own custom reports with the exact filter and sort criteria defined, you can run the report over and over without having to define everything each time.

Note: Reports are displayed using Crystal Reports Designer, which is a third-party software application. You can create customized reports by purchasing Crystal Reports Standard or Crystal Reports Professional. Any Crystal report can be added to the available reports list.

To create a custom report:

1. From the Applications menu, click Report Application to display the FireWorks Report Application dialog box.
2. Click the report category from the Categories list.
3. On the Standard Reports tab, click the standard report on which you want to base the custom report.
4. Under Select Parameter, select the node, then select the panel, and then enter a report time out period.
5. Set the report filters (optional). For more information, see Setting filters for a report.
6. Define how the report data will be sorted. (optional). For more information, see Sorting report data.
7. Click Save.

8. In the Create/Update Custom Report dialog box is displayed, type the report's name, then click Create New, and then click OK..
9. The report is added to the Custom Reports tab under the category you selected in step 2 above.

Creating a partition status report

A partition status report displays all of the devices in a partition that are in an off-normal condition or that have been bypassed.

To issue a partition status report:

1. From the Applications menu, click Partition Commands.
2. Select the Node that the partition is assigned to.
3. Select the Partition.
4. Review the current status of the partition.
5. Click Update Partition Report.

Creating a scheduled report

A scheduled report is a custom report that is configured to run at a certain frequency and at a certain time of day. Scheduled reports can run daily, weekly, or monthly and at any time during the day. Scheduling reports to run automatically takes away the need to manually run reports on a regular basis.

Once a report runs, it is saved in the C:\Fireworks\ScheduledReports directory in PDF format. The reports can be viewed and printed using Adobe Reader.

Note: Only custom reports can be scheduled to run automatically.

To create a scheduled report:

1. Create a custom report.
2. Click Schedules.

   The Schedules Report dialog box is displayed.
3. From the Custom Reports drop-down list, select the custom report you want to schedule to run.
4. Select the run frequency (daily, weekly, monthly).
5. Enter the time of day the report will run.
6. Select the day of week the report will run.
7. Click Add New.

   The report is displayed in the Custom Report Name table at the top of the dialog box along with the report's next run date.

Customizing a layout

You can size and arrange the windows on your screen in any way you desire and create the layout (look) of your choice. Note that each window has a minimum size, meaning that once it is at its minimum, you won't be able to size it any smaller. The layout can then be saved for future use. You can also assign the layout to a user group, which will be used whenever someone from that user group logs on to System Control.

To customize a layout:

1. Size and then place the windows in any arrangement you desire on your screen.
2. From the Applications menu, click Layout Manager.
3. Enter a name for the current layout you just created.
4. Click Save Layout.

   The saved layout is now displayed in Defined Layouts and can be used at any time.

To assign a layout to a user group, see Assigning a screen layout to an access group.

Customizing event messages displayed in the Event Action window

You can customize event messages displayed on the Event Action window's Event Message tab based on a person's user access group. For example, you can have the event message include all data associated with an event for a person logged on as an administrator, but include only a subset of the data for a person logged on as a user. You can also arrange the order in which the Event Action window displays the data.

Event message data fields

- Date and time
- Extended messages
- Device label
- Device description
- Card number
- Partition
- Station ID
- Device partition
- TSA or icon label
- TSA or icon description
- Map label
- Map description

Note: Customizing event messages requires ADMIN level permissions. By default, event messages include all data fields for all user access groups.

To customize event messages displayed in the Event Action window:

1. From the Applications menu, click User Manager, and then click Access Group Configuration.
2. Select the access group.
3. Click the Event Action Window tab.
4. For each field you want to display, click the field name in the Available Fields list, and then click Assign.

   — or —

   Click Assign All to display all fields.
5. For each field you do not want to display, click the field name in the Displayed Fields list, and then click Unassign.

   — or —

   Click Unassign All to remove all fields.
6. To rearrange the order in which the fields are displayed, click the field name in the Displayed Fields list, and then click the Up or Down arrows.
7. Click Apply.
8. Close the dialog box.

Customizing events displayed in the Event List window

You can customize how events are displayed in the Event List window based on a person's user access group. For example, you can display all event data fields for a person logged on as an administrator, but include only a subset of the data fields for a person logged on as a user. You can also change the order in which the data fields are arranged.

For more information, see Event data descriptions.

Note: For UL compliancy, the Date/Time, Event Type, and Description fields must be displayed at all times and therefore cannot be removed. For this reason, they are not displayed in the Available Fields column. However, the Label field can be ordered and is displayed in the Displayed Fields column.

Note: Customizing event data fields requires ADMIN level permissions. By default, events include all data fields for all user access groups.

To customize events displayed in the Event List window:

1. From the Applications menu, click User Manager, and then click Access Group Configuration.
2. Select the access group.
3. Click the Event List Window tab.
4. For each field you want to display, click the field name in the Available Fields list, and then click Assign.

   — or —

Click Assign All to display all fields.

5. For each field you do not want to display, click the field name in the Displayed Fields list, and then click Unassign.

   — or —

   Click Unassign All to remove all fields.

6. To rearrange the order in which the fields are displayed, click the field name in the Displayed Fields list, and then click the Up or Down arrows.
7. Click Apply.
8. Close the dialog box.

Deleting a custom report

You can delete any of the custom reports that you created.

Note: You cannot delete the predefined reports.

To delete a custom report:

1. From the Applications menu, click Report Application.

   The FireWorks Report Application dialog box is displayed.

2. Select the category containing the report that you want to delete.
3. Click the Custom Report tab.
4. Select a report.
5. Click Delete.

   The report is removed from the list of available custom reports.

Deleting a layout

Any of the predefined layouts or any custom layout you created can be deleted from the Defined Layouts list.

To delete a layout:

1. From the Applications menu, click Layout Manager.
2. Under Defined Layouts, select the layout you would like to delete.
3. Click Delete Layout.

   The layout is deleted from the Defined Layouts list.

Deleting a scheduled report

A scheduled report can be deleted if it is no longer needed.

To delete a scheduled report:

1. Click Schedules.

   The Scheduled Reports dialog box is displayed.

2. In the custom report name table, select the report that you want to delete.

   The row is highlighted when the report is selected.

3. Click Delete.

Deleting a user account

User accounts can be deleted as needed. You may need to delete a user account when the employee terminates employment.

To delete a user account:

1. From the Applications menu, click User Manager.
2. Click User Configuration.
3. In Users, select the user account that you want to delete.
4. Click Delete User.
5. Click Yes to confirm the deletion of the user.
6. Click Close.

Deleting an access group

Access groups can be deleted if needed.

Notes

- When you delete an access group, make sure that the users who where assigned to that group get assigned to another group.
- A user-defined group that is assigned as the default group cannot be deleted until another group is assigned as the default group.

To delete an access group:

1. From the Applications menu, click User Manager.
2. Click Access Group Configuration.

3. In Access Groups, select the group that you want to delete.
4. Click Delete Group.
5. Click Yes.
6. Click Close.

Devices dialog

Use the Device dialog box to define a group of devices in a zone TSA or Icon. If any of the devices in the group changes state, the zone TSA or icon border flashes. Each of the devices in a zone TSA or icon has its own ID, label, and description.

A device in a zone TSA or icon can be enabled or disabled, a Sensitivity Status report can be generated, and the label and/or description for each device can be edited.

Devices at...: A list of the devices that make up the zone TSA or icon.

Enable button: Enables the selected device via the enable command.

Disable button: Disables the selected device via the disable command.

Sensitivity button: Displays a sensitivity report for the selected device.

Edit text button: Opens the Entity Labels dialog box so you can edit the label or description for the selected device.

Extended message button: Opens the Extended Message Editor dialog box so you can edit or enter an extended message for the selected device.

Select All button: Selects all of the devices in the list.

Select None button: Selects no devices in the list.

Cancel button: Cancels (removes) the information you are currently entering. It does not remove information that was already applied or added. Also closes the dialog box.

Note: To select more than one device, press the Ctrl key and click the desired devices.

Devices in a device TSA

A device TSA is defined as one or more devices. If any of the devices in the group changes state, the TSA border flashes. Each of the devices have their own label and description.

Displaying devices in a device TSA

To display devices in a device TSA:

1. Locate the device TSA.
2. Right-click the device TSA.

3. Click Devices.

   The Devices dialog box is displayed.

Once the Devices dialog box is displayed, you can enable or disable a device, view a sensitivity report for a device, enter or edit a device's extended message, and edit the label and/or description for each device.

Enabling or disabling a device

To enable or disable a device:

1. Select a device.

   To select more than one device, press the Ctrl key while clicking devices.

   To select all devices, click Select All.

2. Click Enable or Disable.

   To cancel the command, click Cancel.

Viewing a Sensitivity report

To view a Sensitivity report:

A sensitivity report indicates the alarm threshold or calibration of the selected device.

1. Select a device.

   To select more than one device, press the Ctrl key while clicking devices.

   To select all devices, click Select All.

2. Click Sensitivity.

   To cancel the command, click Cancel.

Entering or editing an extended message

To enter or edit an extended message:

1. Select a device.
2. Click Extended Message.
3. Select the event state.
4. Select the event substate.
5. Type a new message or edit the extended message.
6. Click Apply.

   To cancel the message, click Cancel.

Editing the label or description for a device

To edit the label or description for a device:

1. Select a device.
2. Click Edit Text.

   Edit the label and/or description for the device.

Devices in an device icon

A device icon is defined as one or more devices. If any of the devices in the group changes state, the device icon border flashes. Each of the devices have their own ID, label, and description.

Displaying devices in an icon

To display devices in an icon:

1. Locate the device icon.
2. Right-click the device icon.
3. Click Devices.

   The Devices dialog box is displayed.

Once the Devices dialog box is displayed, you can enable or disable a device, view a sensitivity report for a device, enter or edit a device's extended message, and edit the label and/or description for each device.

Enabling or disabling a device

To enable or disable a device:

1. Select a device.

   To select more than one device, press the Ctrl key while clicking devices.

   To select all devices, click Select All.
2. Click Enable or Disable.

   To cancel the command, click Cancel.

Viewing a Sensitivity report

To view a Sensitivity report:

A sensitivity report indicates the alarm threshold or calibration of the selected device.

1. Select a device.

   To select more than one device, press the Ctrl key while clicking devices.

   To select all devices, click Select All.
2. Click Active Status or Sensitivity.

   To cancel the command, click Cancel.

Entering or editing an extended message

To enter or edit an extended message:

1. Select a device.
2. Click Extended Message.
3. Select the event state.
4. Select the event substate.
5. Type a new message or edit the extended message.
6. Click Apply.

To cancel the message, click Cancel.

Editing the label or description for a device

To edit the label or description for a device:

1. Select a device.
2. Click Edit Text.
3. Edit the label and/or description for the device.

Diagnostic Status dialog

Use the Diagnostic Status dialog box to view and/or print the system error messages. The system error messages are the messages that may take place as FireWorks is being used. These error messages are FireWorks application specific.

Each error message has an ID, severity level, date and time, description, and source. These errors can be reviewed, printed, or cleared as needed. Diagnostic errors are also logged in diagnostic reports and can viewed or printed as needed.

Note: For diagnostic or warning error messages, you should restart FireWorks. Fatal and severe warnings may require additional technical support.

ID column: Incremental number that restarts each time FireWorks is started.

Severity column: Four possible error classifications: diagnostic, fatal, warning, and severe.

Date/Time column: The date and time the status event took place.

Message column: Description of the status event.

Source column: The name of the function/routine/piece of software where the error occurred.

Clear button: Clears all message records from the dialog box.

Print button: Prints all of the message status records.

Save button: Automatically saves the diagnostic messages to the following location and file name: Fireworks\Temp\Fwdiagout.dat. This file can be viewed with any text editor program, such as Notepad.

Diagnostic status

Diagnostic status is a list of FireWorks system error messages. These errors are FireWorks application specific. When an error takes place in FireWorks, it is displayed in the Diagnostic Status dialog box.

Each error message has an ID, severity level, date and time, description, and source. Errors fall under four categories: diagnostic, fatal, warning, and severe. These errors can be reviewed, printed, or cleared as needed. Diagnostic errors are also logged in diagnostic reports and can viewed or printed as needed.

Note: For diagnostic or warning error messages, you should restart FireWorks. Fatal and severe warnings may require additional technical support.

To review system diagnostic messages:

1. From the Status menu, click Diagnostic Status.
2. Review the system's status messages.
3. Click Cancel or Close to close the dialog box.

To print the list of system diagnostic messages:

1. From the Status menu, click Diagnostic Status.
2. Click Print.
3. Click Cancel or Close to close the dialog box.

To clear all diagnostic messages from the dialog box:

1. From the Status menu, click Diagnostic Status.
2. Click Clear.
3. Click Cancel or Close to close the dialog box.

To save diagnostic messages:

1. From the Status menu, click Diagnostic Status.
2. Click Save.

   The messages are automatically saved to the following location and file name: Fireworks\Temp\Fwdiagout.dat. This file can be viewed with any text editor program, such as Notepad.

Diagnostics tab

Diagnostics Source

Active diagnostics: All diagnostics that have not been archived.

Selected Archive: Diagnostics that have been archived into a single file. These can be viewed at any time.

Active Diagnostics: The file, number of rows, and start and end date of the current diagnostics.

Archive Active Diagnostics button: Archives all of the diagnostics in the currently active diagnostics.

Archived Diagnostic Files: A list of the previously archived diagnostic files. These can be selected and opened.

Create Report button: Creates a report based on the criteria selected.

Go To button: Goes to a specific row in a report.

Find button: Finds a word or text in a report.

Filter button: Filters a report based on certain criteria selected by the user.

Save button: Saves the report.

Print button: Prints a report.

Cancel button: Cancels (removes) the information you are currently entering. It does not remove information that was already applied or added. Also closes the dialog box.

Disabling and enabling a scheduled report

A scheduled report can be disabled from running if needed.

If a scheduled report was disabled, it can be enabled when needed.

To disable a scheduled report:

1. On the Applications menu, click Report Applications.
2. In the FireWorks Report Application dialog box, click Schedules.

   The Scheduled Reports dialog box is displayed.
3. In the custom report name table, select the report that you want to disable.

   The row is highlighted when the report is selected.
4. Check the Disabled check box.
5. Click Update.

To enable a scheduled report:

1. On the Applications menu, click Report Applications.
2. In the FireWorks Report Application dialog box, click Schedules.

   The Scheduled Reports dialog box is displayed.
3. In the custom report name table, select the report that you want to enable.

   The row is highlighted when the report is selected.
4. Clear the Disabled check box.
5. Click Update.

Displaying a picture file

There are two ways to display a picture:

- Upon the activation of an event
- By manually selecting the image from the selection list

A picture can be programmed to display upon the activation of an event. The picture displays automatically when the device event takes place. The device event response contains the coded information to make this happen. This must be set up by the programmer using System Builder.

The file types that can be displayed are:

- JPEG
- WMF
- BMP
- RLE

To display an image manually:

1. Click the Browse Image Files button.
2. Select the image that you want to display.
3. Click Open.

Displaying a state's active devices

Each event is associated with an LED. When an event takes place, the corresponding LED lights and the event counter increments. You can view a list of the devices that are in that state by clicking on the LED. The Devices Active dialog box is displayed with the device address, label, count (number of events for that device), and bin (the state the device is in).

To display a state's active devices:

1. Click an LED in Event Action.
2. Review the information.
3. Click Close.

Displaying a web page

Web pages from the Internet can be displayed using the drop-down menu field.

Note: Your computer must have a modem, and you must have an Internet service provider to connect to the Internet.

To display a web page:

1. In the drop-down field, type the URL (web address) or select a URL.
2. Press Enter.
3. Use the tool bar buttons to navigate around the Internet.

   Refer to Button definitions for more information.

Displaying an HTML file

HTML files can be displayed using the drop-down menu selection and the Browse button.

Displaying an HTML file using the Browse button

To display an HTML file using the Browse button:

1. Click the HTML Browse button.
2. Locate the HTML file.
3. Click Open.

Note: This file will now remain in the drop-down menu selection.

Displaying an HTML file using the drop-down menu

To display an HTML file using the drop-down menu:

1. Click the drop-down menu arrow.
2. Locate the HTML file in the menu.
3. Double-click the file.

Displaying card information

Card information is accessed from the ACDB database, which *must* be set up prior to receiving or viewing card access information. See Configuring the ACDB/FireWorks interface for more information. Card information can be displayed in two ways, during the activation of an event that has associated cardholder information, or by searching for and displaying cardholder information using the Get Card Information button.

When an event has associated card information, it is displayed on the Card Information tab. Card information can include the cardholder's name, title, ID number, etc. and a picture of the person. The information you want displayed is determined when configuring the ACDB interface.

Card information can also be accessed using the Get Card Information button. This allows you to search for the desired cardholder and display their information at any time.

To view card information associated with an event:

1. Select the event in Event List.
2. In Event Action, click the Card Information tab.
3. Review the card information.

To view card information at any time:

1. Click the Card Information tab.
2. Click Get Card Information.

3. The Card Information Search dialog box is displayed.
4. Type a name or card number that you want to search for.
5. Click Search.
6. Select the desired record from those found.
7. Click Select Record.

   The card information is displayed in the Card Information dialog box.

Displaying event messages

To display event messages, the event must be selected. The All Events tab in Event List contains events that have taken place in your system (up to 1,000). When you select an event, associated messages are displayed on the Event Message tab of Event Action. The event type (name of event) is displayed at the top of the Event Message tab.

Note: If you need to view an event message that took place prior to the stored 1,000 events, you must use the History Viewer.

To display a message:

1. Click the All Events tab in Event List.
2. Locate the event.
3. Click the event in the list.
4. Click the Event Message tab in Event Action to view the messages.

Displaying log entries

To display log entries for an event, the event must be selected. The All Events tab in Event List contains events that have taken place on your system (up to 1,000). When you select an event, associated log entries are displayed on the Log Entry tab of Event Action.

Note: If you need to view a log entry that took place prior to the stored 1,000 events, you must use the History Viewer.

To display a log entry:

1. Click the All Events tab in Event List.
2. Locate the event.
3. Click the event in the list.
4. Click the Log Entry tab to view the log entry for the event.

Displaying maps

Depending on your site, you may have one or more maps that graphically represent your site. Because only one map can be displayed at a time, displaying different maps is very important. Maps can be displayed in three ways:

- Map selection list
- Map navigation buttons
- Using the Functions menu and/or keyboard shortcuts

Map selection list

The map selection list contains all of the maps that make up your system. From anywhere or at anytime, you can click the drop-down arrow and select a map from the list.

Map navigation buttons

Refer to Button definitions.

Functions menu/keyboard shortcuts

The Functions menu has three map display selections: Display Device map, Display Site map, and Display Parent map. Each of the selections has a keyboard function key shortcut. The selections do the same thing as their corresponding buttons in Map Display.

Display Device map: Branches directly to the map with the highest priority active device from any location in the map system. (Keyboard shortcut F5.)

Display Site map: Branches directly to the site map from any location in the map system. The site map is the main map which is displayed when no active alarms are present. (Keyboard shortcut F7.)

Display Parent map: Branches up one map level from the current map. This is like following a TSA link in reverse, from destination map to source map. (Keyboard shortcut F9.)

Displaying titles in the video display area

If your switcher is capable of defining titles for each camera, you can display these titles in the video display area. All titles must be defined and programmed at the switcher. If a "top" title is defined, it is displayed at the top of the video image. If a "bottom" title is defined, it is displayed at the bottom of the video image.

To display titles in the video display area:

1. Click Show if the camera setting and control buttons are not already displayed.
2. Under Titles, click Top or Bottom to display titles at the top and/or bottom of the display area. Remember, these must be programmed at the switcher.
3. Click Hide to hide the camera setting and control buttons.

Editing a custom report

You can edit the custom reports that you created. For example, you can change the name of the report.

Note: You cannot edit the predefined reports.

To edit a custom report:

1. From the Applications menu, click Report Application.

   The FireWorks Report Application dialog box is displayed.
2. Select the category containing the custom report you want to edit.
3. Click the Custom Reports tab.
4. Select the report.
5. Edit the report characteristics as necessary (e.g. parameters, filtering, sort criteria).
6. When finished, click Save.

   The Create/Update Custom Report dialog box is displayed.
7. If needed, edit the name of the report or use the report's existing name.
8. Click Update Existing.
9. Click OK.

Editing a scheduled report

A scheduled report's run frequency and time can be edited if needed.

To edit a scheduled report:

1. On the Applications menu, click Report Applications.
2. In the FireWorks Report Application dialog box, click Schedules.

   The Scheduled Reports dialog box is displayed.
3. In the custom report name table, select the report that you want to edit.

   The row is highlighted when the report is selected.
4. Edit the report as necessary.
5. Click Update.

Editing access groups

Once you have created a new access group, you may need to modify or change the privileges over time. All characteristics and privileges for a group can be changed at any time by Administrators.

To edit an access group:

1. From the Applications menu, select User Manager.
2. Click Access Group Configuration.
3. In Access Groups, select the group that you want to edit.
4. Edit the characteristics (label or description) or the privileges as required.
5. Click Apply.
6. Click Close.

Editing all email actions

Previously entered email actions may need editing due to email address changes, etc. You can quickly update and edit an email action using the Edit All Email Actions dialog box.

To edit all email actions:

1. From the Applications menu, click Edit All Email Actions.
2. Select the type of update you would like to perform.

   Replace current address with new address in all actions: Replaces the current address with a new address in all actions that have the current address.

   Delete current address from all actions: Deletes the current address from all actions containing that address.

   Add new address to all actions containing current address: Inserts the new address in all email actions containing the current address.

   Note: If an action has no remaining addresses after an update, the action is deleted.
3. Enter the current (active) email address.
4. Enter the new email address.
5. Click Apply.
6. Click Cancel or Close to close the dialog box.

Editing email addresses

Email addresses are used when creating or editing email actions. You may have to enter new email addresses or edit previously entered email addresses.

To edit email addresses:

1. From the Applications menu, click Edit Email Addresses.
2. Click New to enter a new email address or select the address you want to edit.

3. Add the new email address information or edit the address information.
4. Click Apply.
5. Click Cancel or Close to close the dialog box.

Editing labels and descriptions

Each of the TSAs, icons, devices, text, etc. on a map have a label and description that were assigned during the configuration process. These labels and descriptions provide important information about the TSA or icon.

As time goes on, you find it necessary to change or update these labels or descriptions. This can be done using the text editor in Map Display.

Label: A name or ID for the device.

Description: A description of the device.

To edit a label or description for a TSA or icon:

1. Locate the TSA or icon on a map.
2. Right-click the TSA or icon.
3. Click Edit Text on the menu.
4. Edit the label and/or description.
5. Click Apply.

Editing user accounts

Once you have entered a new user and their account characteristics, you may need to modify or change the characteristics over time. All characteristics can be changed at any time by administrators or managers.

To edit a user's account:

1. From the Applications menu, click User Manager.
2. Click User Configuration.
3. In Users, select the user that you want to edit characteristics.
4. Edit the characteristics for the user.
5. Click Apply.
6. If you changed the user's password, you will have to confirm the password by retyping it and clicking OK.
7. Click Close.

Entering or editing extended messages

You may find the need to add or change an extended message to a device or TSA once the initial system configuration is complete.

Extended messages are messages that can instruct the user to perform certain tasks or duties when an event takes place in the system. Extended messages can also provide the user with additional information about devices.

Extended messages can be entered or edited using the Event Message tab in Event Action or by right-clicking on a device or TSA in Map Display.

Notes

- Only the extended message can be entered or edited in System Control.
- To enter or edit an extended message in Event Action, the device or TSA MUST trigger an event. When the event takes place, the extended message is displayed in the Event Message tab and then can be edited. If no extended message exists, one can be entered.

To enter or edit an extended message using Event Action:

1. Click the All Events tab in Event List.
2. Locate the event.
3. Click the event in the list.
4. Click the Event Message tab in Event Action.
5. Right-click in the message display area.
6. Click Edit Extended Message.
7. Select the event state.
8. Select the event substate.
9. Type a new message or edit the extended message.
10. Click Apply.

To enter or edit an extended message using Map Display:

1. Locate the device or TSA.
2. Right-click on the device or TSA.
3. Click Devices.
4. Select a device in the Devices At list.
5. Click Extended Message.
6. Select the event state.
7. Select the event substate.
8. Type a new message or edit the extended message.
9. Click Apply.

Entity labels dialog

Use the Entity Labels dialog box to edit the label and description of the TSA, icon, or device you selected.

Label: Used to edit the label of the selected item.

Desc: Used to edit the description of the selected item.

Apply button: Saves all of the changes you made without closing the dialog box.

Cancel button: Cancels (removes) the information you are currently entering. It does not remove information that was already applied or added. Also closes the dialog box.

EST2/FCC/IRC3 reports tab

Use the EST2/FCC/ICR3 Reports tab to generate panel status, query smoke level, analog sensitivity, disabled lines, disabled zones, disabled procedures, disabled zone messages, and active status reports.

Report Type

Panel status: Lists the current state of each fire panel connected to the workstation.

Query smoke level: Shows the current panel sensitivity level for the node you selected. The node will either report a normal sensitivity or an alternate sensitivity depending on what was setup in the data entry program for the system.

Analog sensitivity: Each device (ionization or photoelectric smoke detector) connected to a node reports its real-time sensitivity value to its controller. Sensitivity is the alarm threshold or calibration of the detector. The sensitivity report displays the values of all points connected to a node according to device type and value.

Disabled lines: Lists all of the lines that are currently disabled.

Disabled zones: Lists all of the zones that are disabled.

Disabled procedures: Lists all actions, sequences, or time controls that are disabled.

Disabled zone messages: Lists all of the zones that have disabled messages.

Active status: Lists all of the points (devices) connected to a node (fire network) that are in an off-normal state.

Unit: The FireWorks workstation.

Node: The communications line (number) to a control panel network. This may be the line to one panel or the line to a network of panels.

Line: The line number for the device's panel.

Panel: The panel (either all panels or a selected panel) that is connected to the node.

Create Report button: Creates a report based on the criteria selected.

Go To button: Goes to a specific row in a report.

Find button: Finds a word or text in a report.

Save button: Saves the report.

Print button: Prints a report.

Report timeout (seconds): 30 seconds is the default time period for FireWorks to receive a report from the panel. If more time is required due to your request timing out, increase the timeout period. Timeout can be set from 30 to 1,000 seconds.

Cancel button: Cancels (removes) the information you are currently entering. It does not remove information that was already applied or added. Also closes the dialog box.

EST3 command types

The following are the different command types available for EST3 systems:

- Activate commands
- Restore commands
- Enable commands
- Disable commands
- System commands

Activate commands

Command	Description	Activated from
Alternate message	Activates alternate message routing within EST3 panels (if enabled in EST3)	Panel
Alternate sensitivity	Activates the detectors alternate sensitivity (secondary sensitivity) values for determining an alarm	Panel
Amplifier power	Activates an amplifier's audio output	Card
Audio message	Activates an audio message for broadcasting over a selected audio channel	Card
Check-in group	Activates a check-in group's check-in window to receive normal check-ins and to activate the emergency output when activated outside the check-in window	Card
Evacuate	Activates the system's evacuation function	Panel
GA inhibit	Activates the GA inhibit function to prevent the two-stage alarm timer from completing its cycle	Panel
Guard patrol	Activates a guard patrol's early, late, and out of sequence sensing mechanisms	Card
Led	Activates an LED on the control/display module	Device
Relay	Activates a relay module	Device

Service group	Activates a service group (a group of devices to be tested together)	Card
Signal alert	Activates the sounder base alert signal when using Edwards analog devices configured as 2-stage sounders	Device
Signal evac	Activates the sounder base evac signal when using Edwards analog devices configured as 2-stage sounders	Device
Test alarm	Places the device into its active state for verification testing	Device
Test activate or other	Places the device into its active state for testing	Device
Test trouble	Places the device into a trouble condition	Device
Activate system functions 1-4	Activates the programmed system monitor event (four possible)	Panel

Restore commands

Command	Description	Activated from
Alternate message	Restores primary message routing within EST3 panels	Panel
Alternate sensitivity	Restores the detector's primary sensitivity values for determining an alarm	Panel
Amplifier power	Turns off an amplifier's audio output	Card
Audio message	Stops an audio message from broadcasting over a selected audio channel	Card
Check-in group	Closes a check-in group's window	Card
Evacuate	Restores the system's evacuation function	Panel
Guard patrol	Ends the patrol	Card
Led	Restores an LED on the control/display module	Device
Relay	Restores a relay module	Device
Signal off	Turns off the sounder base alert or evac signal when using Edwards analog devices configured as 2-stage sounders	Device

Service group	Causes the test mode to revert to circuit-by-circuit testing	Card
Restore system functions 1-4	Restores the programmed system monitor event (four possible)	Panel

Enable commands

Note: Enable is not the same as activate. Enable means that once enabled, the system can activate the device if needed.

Command	Description	Activated from
Amp power	Enables an amplifier's audio output	Card
AND group	Enables an AND group's programmed response to occur when conditions for the AND group are satisfied	Card
Card	Enables the card (local rail module) input and output functions to operate	Card
Check-in group	Enables a check-in group's check-in window to receive normal check-ins and to activate the emergency output when activated outside the check-in window	Card
Guard patrol	Enables a guard patrol's early, late, and out of sequence sensing mechanisms	Card
Input	Enables an input device to recognize an active or faulty detector or input module	Device
Led	Enables an LED on the control/display module	Device
Matrix	Enables a matrix group's (group of devices) programmed response to occur when conditions for the matrix group are satisfied	Card
Relay	Enables a relay module	Device
Service group	Enables a service group (a group of devices to be tested together)	Card
Time control	Enables a time control to function at the programmed time	Card

Zone	Enables a zone's programmed responses to function	Card

Disable commands

Note: Disable is not the same as restore. Disabling an object prevents it from being activated.

Command	Description	Activated from
Amp power	Disables an amplifier's audio output	Card
AND group	Stops the AND group's programmed response from occurring, even if the conditions for the AND group are satisfied	Card
Card	Disables the card (module) input and output functions from operating	Card
Check-in group	Closes the time group's check-in window and prevents activation of the emergency output when activated outside the check-in window	Card
Guard patrol	Prohibits the guard patrol from being started	Card
Input	Stops the system from recognizing and responding to a particular device	Device
LED	Disables an LED on the control/display module	Device
Matrix	Disables the matrix group's programmed response, even if conditions for the matrix group are satisfied	Card
Relay	Disables a relay module	Device
Service group	Disallows anyone from activating the service group for testing	Card
Time control	Prohibits the time control from functioning at the programmed time	Card
Zone	Disables a zone's programmed response functions	Card

System commands

Command	Description	Activated from
Alarm silence	Silences the audible notification appliances. May also turn off visible notification appliances, depending on EST3 configuration.	Panel
Calibrate analog	Resets the environmental compensation and dirtiness levels after the devices have been cleaned for Edwards analog cards and smoke devices	Card or device
Drill	Activates the fire drill function	Panel
Panel silence	Silences the panel's internal buzzer after all events have been acknowledged	Panel
Restart	Restarts the panel or network	Panel
Reset	Resets the panel to normal (panel may not go normal if a point is not restored or normal)	Panel
Set date	Sets the system's date	Node
Set time	Sets the system's time	Node
Manual reconcile	Reconciles the system with the panel	Node

EST3 Reports tab

Use the EST3 Standard Reports tab to generate Status, Output Status, Disabled, Sensitivity, Revision, Trouble, and Panel History reports.

Report Type

Status Report: Lists all of the devices connected to a control panel that are in an off-normal state.

Output Status Report: Lists all of the active outputs, including LEDs, connected to a control panel.

Disabled Report: Lists all of the devices connected to a panel that have been disabled.

Sensitivity Report: Each Signature Series smoke detector reports its real-time value. Sensitivity is the alarm threshold or calibration of the detector. The report displays the values of all points connected to a panel according to device type and value.

Revision Report: Lists all of the revision information for the hardware, firmware, project, microcode, and database in the system. All revision information is stored in memory on the 3-CPU.

Trouble Report: Lists all of the devices connected to a control panel that are in trouble.

Panel History Report: Lists all of the events and commands that have taken place on a control panel.

Partition Report: Lists the devices associated with a partition.

Unit: The FireWorks workstation.

Node: The communications line to a control panel network. This may be the line to one panel or the line to a network of panels.

Panel selection: The panel (either all panels or a selected panel) that is connected to the node.

Partition: Lists the partitions in your system.

Create Report button: Creates a report based on the criteria selected.

Go To button: Goes to a specific row in a report.

Find button: Finds a word or text in a report.

Save button: Saves the report.

Print button: Prints a report.

Report timeout (seconds): 30 seconds is the default time period for FireWorks to receive a report from the panel. If more time is required due to your request timing out, increase the timeout period. Timeout can be set from 30 to 1,000 seconds.

Cancel button: Cancels (removes) the information you are currently entering. It does not remove information that was already applied or added. Also closes the dialog box.

Event Action display

Use the Event Action window to display messages that are associated with a device that generated an event, flash a corresponding event LED, or make a log entry for each event.

When no events are in the system, the top portion of the Event Message tab displays the phrase "FireWorks Banner, Configurable," which indicates that the system is functioning correctly. When events are in the system, the event type (name of the event) is displayed in this area.

Event Message tab: Displays a message that corresponds to the selected event in Event List. This message, entered by the system programmer, may contain important procedural information about what to do during an alarm or other event.

Log Entry tab: Allows you to enter and save important log information about an event. The log entry is stored with the event and can be reviewed or printed at a later date.

Create/Edit Log Entry button: Displays the Create/Edit Log Entry dialog box, which is used for making your own log entry for an event.

Card Information tab: Displays all of the card access information that is associated with the event that is selected in Event List. A picture of the cardholder is also displayed.

Get Card Information button: Displays the Card Information Search dialog box, which is used to search for and select the desired card information record. Once selected, all card information is displayed in the Card Information dialog box.

Button definitions	
Button	**Definition**
	Acknowledge: Notifies System Control that you are aware of and have recognized the device event that resulted in the current event message. (Keyboard shortcut F1 and on the Functions menu.)
	Alarm Silence: Silences the audible notification appliances connected to the system
	Panel Silence: Silences the control panel's internal buzzer
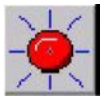	Drill: Forces all audible and visual notification appliances to the ON state
	Reset: Returns a control panel to normal if all its devices have been restored
	Contacts: Opens the Contacts dialog box, which is used to contact and authenticate receiver event contacts. It is only enabled when a receiver event is selected that has associated contacts.
	Silence Workstation: Silences the workstation's internal buzzer and turns an event associated audio (AVI) file ON and OFF

LED	Color
Alarm	Red
Security (alarms)	Orange
Supervisory	Yellow
Trouble/Disabled	Yellow

Alert/Monitor	Yellow
Alarm silence	Yellow

Event colors

Each event that takes place in your system is color-coded by type.

Event color codes

Color	Event type
Red	Alarm
Yellow	Trouble
	Supervisory
	Monitor
	Non-alarm security
	Security bypass
	Card access
Orange	Security alarm
Grey	Disabled
	Security partition disarmed
Green	Restore
Gold	Supervisory (special, see below to set up)

Notes

- EST2, IRC-3, and FCC security points are annunciated as trouble events (yellow).
- EST3 partition events (away, stay, away fail, stay fail, entry delay, exit delay) are yellow.

Changing supervisory events to gold

Because trouble and supervisory events are displayed in yellow, you have the option to change supervisory events to display in gold. This makes it easier to tell the difference between a trouble event and a supervisory event.

To change supervisory events to gold:

1. Open System Builder.

2. Open System Configuration.
3. Click the Basic Properties tab.
4. Locate the following property: SYSCONTROL_SUPERVISORY_GOLD.
5. In the Value column, select "1" for gold or "0" for yellow (default).
6. Click Apply.
7. Continue configuring other properties or click Done if finished.
8. Restart FireWorks.

Event List display

Use the Event List window to display all of the events that take place in your system. The Event List window is the controlling or "main" window. It controls what is displayed in the other windows based on the events that take place in the system. This control method is referred to as "event driven." Information and indication for an event are shared between the windows.

When events take place, they are displayed on the New Events tab. Each window updates to display information relating to that event. Clicking on an event also updates the windows to display the related information.

Note: For a complete listing of events and their descriptions, refer to the topic Event type descriptions.

Event colors	
Color	**Event type**
Red	Alarm
Yellow	Trouble Supervisory Monitor Non-alarm security Security bypass Card access
Orange	Security alarm
Grey	Disabled Security partition disarmed
Green	Restore

Tab descriptions

New Events tab: Displays all events that take place before they are acknowledged. Once they are acknowledged, they are removed from this list and added to the Acknowledged Events list and/or All Events list.

Acknowledged Events tab: Displays all acknowledged events. A maximum of 500 events can be stored at a time. As more acknowledged events take place, the older acknowledged events dropoff, but can be found in History.

Security acknowledged events remain on this tab until the partition is reset. They then move to the All Events tab.

All Events tab: Displays all of the events that have taken place, including acknowledged events. A maximum of 500 events can be stored at a time. As new events take place, the older events dropoff but can be found in History.

Column descriptions

Type: The type of event (alarm, trouble, supervisory, monitor, security, or restore) taking place in the system.

Date/time: The date and time that the event occurred.

Device: The label of the device that generated the event.

Address: The address of the device that generated the event.

Location: A brief description of where the device is located.

Map: The map that contains the device that generated the event.

User: The user who was logged on at the time of the event.

Event message overview

An event message is a text item that describes a device or event, and tells you what to do when an event takes place. Messages can be generated in the SDU or in FireWorks. Messages generated in the SDU and FireWorks can be displayed in Event Action. System Control provides a means for adding descriptions and extended messages to devices or TSAs.

Extended messages are messages that inform or instruct the user to perform certain tasks or duties when an event takes place in the system. For example, when an event takes place, you may want to tell the user to call or contact a certain person or department, send a guard to a specific place, or power down certain equipment. These messages can be entered in either System Builder during the configuration process or in System Control when needed.

Event operation

When an event occurs in your system, a number of functions take place automatically. Each individual system performs a number of control functions to condition the area it services, including operating audible and visual notification appliances, closing doors, etc. These actions are performed independently of the FireWorks system. At the same time, the system sends the device event information to its workstation for processing by System Control.

Event List processing is as follows:

1. The Event List displays information about the point that is waiting to be acknowledged. The events are color-coded to show their type. Each line is a single event and displays the event type, date and time, device, address, location, and map.
2. Once the event is acknowledged, it is removed from the New Events tab and is added to the Acknowledged Events tab.
3. Once the restoral of the point is acknowledged, the events and acknowledgements reside only on the All Events tab.
4. Security events, once acknowledged, remain on the Acknowledged Events tab until a partition reset is executed. Then they are moved to the All Events tab. Exception: Partition events operate the same way as security events, as described above.
5. A security partition state (armed, away, stay, disarmed) always remains on the Acknowledged Events tab, indicating the current state of the partition. A partition is always in one of these states.

Event operation

When an event occurs in your system, a number of functions take place automatically. Each individual system performs a number of control functions to condition the area it services, including operating audible and visual notification appliances, closing doors, etc. These actions are performed independently of the FireWorks system. At the same time, the system sends the device event information to its workstation for processing by System Control.

Map Display processing is as follows:

1. The device and/or map TSA flashes either red (alarm), orange (security), yellow (trouble, supervisory, monitor), or green (restore).
2. The Device Map button becomes active.

Event operation

When an event occurs in your system, a number of functions take place automatically. Each individual system performs a number of control functions to condition the area it services, including operating audible and visual notification appliances, closing doors, etc. These actions are performed independently of the FireWorks system. At the same time, the system sends the device event information to its workstation for processing by System Control.

Event Action processing is as follows:

1. The Acknowledge button becomes active.
2. The associated event message is displayed.
3. The associated event LED flashes.
4. The Log Entry tab is active for making log entries related to the event.
5. The Silence Workstation button becomes active.

Event type descriptions

The first column in Event List is the Type column. Each event type is made up of a bin, state, and event element. These define the type or kind of event that has taken place in your system, as follows:

- Bin is the event classification
- State is the change of state to your system
- Event is the result of the change of state to your system

Event type format:

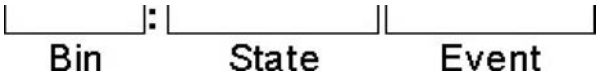

Bin descriptions

Bin	Description
Alarm	Fire alarm event
Disabled	Disable event, may be system, fire, security, or access
Monitor	Process management and other non-life safety events
Security	Security alarm event
SecurityArmed	Security events from armed partitions
SecurityBypassed	Bypass security events for items in a partition
SecurityBypassedNIP	Bypass security events not in a partition
SecurityDisabled	Disable security events for items in a partition
SecurityDisabledNIP	Disable security events not in a partition
SecurityMonitor	Security event from a partition that is related to the status of a point or partition
SecurityMonitorNIP	Security event not in a partition that is related to the status of a point or partition
SecurityNIP	Security events that are not in a partition

Supervisory	Fire supervisory
Trouble	Fire or system trouble

State descriptions

State	Description
+12V Failure	The +12V voltage level on the watchdog card is no longer being detected
-12V Failure	The -12V voltage level on the watchdog card is no longer being detected
3V Failure	The 3V voltage level on the watchdog card is no longer being detected
5V Failure	The 5V voltage level on the watchdog card is no longer being detected
AC Fail	D6600 receiver AC power failure
Access Account Event	Receiver event
Access Account Event(NO REST)	Receiver event
Access Denied 2 Man Rule Timeout	Second authorized card was not presented before a specified time period
Access Denied Antipassback	Strict antipassback
Access Denied Escort	No escort card presented
Access Denied Outside Schedule 1	Card holder attempted to gain access outside of the designated schedule one
Access Denied Outside Schedule 2	Card holder attempted to gain access outside of the designated schedule two
Access Denied Partition Armed	Card holder attempted to enter a secure area
Access Denied Pin Not Entered	No personal identification number was entered
Access Denied Pin Not Valid	Incorrect personal identification number entered
Access Denied Ranks Not Active	Card holder is either not active or has expired
Access Denied Reader Disabled	Card presented to disabled reader
Access Denied Unknown	General failed card presentation (no record)
Access Granted	Card holder gained access
Access Granted Antipassback	Card passback occurred but second user was allowed entry
Access Granted Irregular	Card holder was outside schedule one or two but was still allowed access
Access Granted Muster	Card presented to muster station
Account Status Failure	D6600 receiver account status failed

Account Supervision State	Receiver account was inactive for a period of time
Activate Output	D6600 receiver output activated
Alarm	Any alarm point
Alarm Account Event	Receiver event
Alarm Account Event(NO REST)	Receiver event
Alarm Armed	Security alarm from an armed partition
Alarm Disarmed	Security alarm from a disarmed partition
Alarm Not In Partition	Security alarm from a point not included in a partition
Alarm Silence	Fire NAC circuit silence
Alarm Verify	Fire alarm verification circuit
All Call	Audio EVAC system function
Audio In	D6600 receiver audio in
Battery Low	D6600 receiver battery charge is low
Battery Missing	D6600 receiver battery not connected
ByPassed Not In Partition	Bypass of a point not in a partition
C900 Battery Low	D6600 receiver C900 battery is low
C900 Output Activated	D6600 receiver C900 output was activated
C900 Intercept Disabled	D6600 receiver C900 intercept was disabled
Call In Activation	Firefighter phone activation
Card/Port Not Found	FireWorks internal fault
Check In Group	Check-in group event
Closing Trouble	Trouble automatic arming of CMS check-in
Communication Error	D6600 receiver communication error
Communication Fault	Wiring or device fault
Disable	Disable command
Disabled	Disable state for a point in a partition
Disabled Not In Partition	Disable state for a point not in a partition
Drill	Drill event
Emergency	Emergency event
Entity In Test	Device or group in test mode (service group)
Entry Timer	Security perimeter entry timer
Evacuation	Command or pseudo point for evacuation
Exit Timer	Security perimeter arming
Fan Failure	Fan "xx" on the watchdog card failed

Fault Armed	Security fault while armed (alarm)
Fault Disarmed	Security fault while disarmed
Fault Not In Partition	Security fault for point not in a partition
First Alarm Activation	First fire alarm
First Disable Activation	First disable (all)
First Monitor Activation	First monitor (all)
First Supervisory Activation	First supervisory (fire)
First Trouble Activation	First trouble (fire and system)
Ground Fault	Wiring earth ground
Guard Patrol Early	Guard checked in at station early
Guard Patrol Late	Guard checked in at station late
Guard Patrol Out Of Sequence	Guard checked in at station in the wrong order
Line Card Trouble	D6600 receiver line card trouble
Line Fault	D6600 receiver line fault
Local Alarm Activation	Local event
Local Monitor Activation	Local event
Local Trouble Activation	Local event
Maintenance Alert	Fire device maintenance
Maintenance Armed	Security maintenance event with partition armed
Maintenance Not In Partition	Security maintenance event from point not in a partition
Monitor	Monitor event
Monitor Account Event	Receiver event
Monitor Account Event(NO REST)	Receiver event
Network Error	D6600 receiver network issue
Object Running	Time control
Partition Alarm	Partition alarm event
Partition Away	Partition armed with away state
Partition Away Fail	Arm away command failure
Partition Disarmed	Partition disarmed state
Partition Fault	Fault event from a partition
Partition Stay	Partition armed with stay state
Partition Stay Fail	Arm stay command failure
Point In Service Group Activation	Point in test (service) active
Power Trouble	Panel power trouble

Prealarm	Intelligent or analog detector pre-alarm
Printer Failure	The printer is no longer working
Printer Not Found	The printer is not connected
Printer Off Line	D6600 receiver printer not online
PRT Error	D6600 receiver PRT error
Receiver Internal System Message	Receiver problem
Relay Confirmation	Output confirmation
Reset Activation	Fire alarm reset
Reset Stage 1 Activation	First portion of a fire reset
Reset Stage 2 Activation	Second portion of a fire reset
Reset Stage 3 Activation	Third portion of a fire reset
Restoration Without Alarm Activation	Restoration for an alarm came but there was no activation
Restoration Without Monitor Activation	Restoration for a monitor came but there was no activation
Restoration Without Security Activation	Restoration for a security came but there was no activation
Restoration Without Supervisory Activation	Restoration for a supervisory came but there was no activation
Restoration Without Trouble Activation	Restoration for a monitor came but there was no activation
Security	Security event
Security Account Event	Receiver event
Security Account Event(NO REST)	Receiver event
Security ByPassed	Security point bypassed event
Security Maintenance	Security maintenance event
Service Device	Device in test (service)
Service Group Activation	Service (test) group active
Set Time	D6600 receiver time not set
Silence Switch Activation	Panel silence event
StartUp	Panel startup event
Station Activation	Guard patrol station event
Supervisory	Fire supervisory
Supervisory Account Event	Receiver event
Supervisory Account Event(NO REST)	Receiver event
Switch Activation	Panel switch event

System Temperature High	D6600 receiver temperature is high
Tamper Armed	Security tamper event while partition armed (alarm)
Tamper Disarmed	Security tamper event while partition disarmed
Tamper Not In Partition	Security tamper event from a point not in a partition
Temperature Failure	The temperature sensor on the watchdog card is no longer working
Time Control Activation	Time control event
Trouble	Fire or system trouble
Trouble Account Event	Receiver event
Trouble Account Event(NO REST)	Receiver event
Trouble Short	Output or communication line short
Two Stage Timer Expiration	Canadian operation
Unknown Account State	Receiver account is not programmed
Unknown Event State	Receiver event is not programmed
Unknown Line State	Receiver line not programmed
Unknown Type	Unknown event type (Call Technical Support)
UPS AC Fail	D6600 receiver AC power failure on the UPS
UPS Battery Low	D6600 receiver UPS battery is low
Virtual Point Alarm	User-defined status
Virtual Point Trouble	User-defined status

Event descriptions

Event	Description
Activate From Communication Reconcile	Activation of an event from a communication reconcile
Activate	Activation of an event state
Activate Message Disabled	Activation of a point with message disabled
Activate Under Service	Activation of an event state when the object (could be any SDU object; panel, card, device, etc.) was in a service condition
Activation Ack	The event state activation was acknowledged
Reset Partition	Security partition reset
Restoration Ack	The event state restoral was acknowledged
Restore	Restoral of an event state
Restore From Communication Reconcile	Restoral of an event from a communication reconcile

Restore Message Disabled	Restoral of message disabled
Restore Under Service	Restoral of an event state when the object (could be any SDU object; panel, card, device, etc.) was in a service condition

The following "event" does not fall under the bin, state, or event descriptions.

Event	Description
Undefined error	Unexpected event (Call Technical Support)

Executing a command icon

A command icon does not represent a device. Rather, it defines a set of panel commands. When you click a command icon, you can review or execute these commands.

You can use a command icon to execute the commands found in the Commands dialog box. Other than issuing commands, command icons are passive. They have a black border and do not flash or change color.

To execute a command icon:

1. Locate the command icon (black in color).
2. Click the icon.
3. In the Commands dialog box, click Execute.

Note: All of the commands that are displayed in the Commands dialog box are activated when you click Execute. Make sure these are the commands that you want to activate on your system.

Executing a command TSA

A command TSA represents a command you can execute in your system. Command TSAs never flash, and have a solid black border. When executed, the associated preprogrammed commands are sent to the specified fire alarm networks. You can issue commands to any workstation and node in a FireWorks network. A command TSA can contain a group of devices.

To execute a command TSA:

1. Locate the command icon (black in color).
2. Click the icon.
3. In the Commands dialog box, click Execute.

Note: All of the commands that are displayed in the Commands dialog box are activated when you click Execute. Make sure these are the commands that you want to activate in your system.

Exiting from System Control

Exiting from System Control means stopping the System Control program. When you exit from System Control, you return to the Windows desktop.

Note: Exiting from System Control is access level controlled. The Exit command is not active if you do not have the right access level.

WARNING: When you exit from System Control, you shut down the system at the workstation. Device events occurring at the nodes attached to the workstation will not be annunciated.

To exit from System Control:

1. From the File menu, click Exit.
2. Click Yes to exit from System Control.

   Click No to cancel.

Extended message editor dialog

Use the Extended Message Editor dialog to enter or edit an extended message for a device. Extended messages are messages that inform or instruct the user to perform certain tasks or duties when an event takes place in the system.

Device: The label of the device.

State: The device's event state (alarm, trouble, supervisory, etc.) that the message is attached to.

Substate: The device's event substate (activate, restore, etc.) that the message is attached to.

Extended message: The area used to enter or edit an extended message.

Apply button: Saves all of the changes you made without closing the dialog box.

Cancel button: Cancels (removes) the information you are currently entering. It does not remove information that was already applied or added. Also closes the dialog box.

Filter settings dialog

Use the Filter command to filter a report based on certain criteria. This may be beneficial when you only want to view certain parts of a report.

Note: All filters can be used in combination to narrow your filter criteria even further.

Filter by Date Range: Filters a report based on a range of dates.

From: The beginning date for the report.

To: The ending date for the report.

Filter by Type: Filters a report based on one of the criteria listed.

Filter by Search Text: Filters a report based on a specific word or text. All of the columns or just the columns you select can be searched.

Order by Column: Organizes a report based on two columns you select. The columns can be arranged in ascending or descending order.

First Column to Order by: This is the first column you want to use to organize a report.

Second Column to Order by: This is the second column you want to use to organize a report.

Apply button: Saves all of the changes you made without closing the dialog box.

Reset All button: Resets all filters.

Cancel button: Cancels (removes) the information you are currently entering. It does not remove information that was already applied or added. Also closes the dialog box.

FireWorks Watchdog Card Status dialog

Use the Watchdog Card Status dialog box to monitor supervision points within the FireWorks computer. The supervision points are: internal fans, CPU, power supply, and temperature.

Fan status: Indicates the status of the fans inside the computer. Running means the fan is running. Failed means the fan is not running.

Voltage levels: Indicates the power supply voltage levels inside the computer.

CPU Temperature: Indicates the temperature of the CPU inside the computer.

Fan operating status: Indicates the voltage level and duty cycle the fans are operating at inside the computer.

Focusing a camera

Some cameras can be focused using the focus buttons. Focusing allows you to make adjustments to the distinctness or clarity of the image coming from the camera.

Note: Only one camera can be controlled at a time.

To focus a camera:

1. Select a camera.

   Refer to Selecting a camera for more information.

2. Click the Focus In and Out buttons to adjust the clarity of the picture.

Glossary

A B C D E F G I L M N P R S T U V W Z

A

Access level	See User level.
Acknowledge	Deliberate action of the workstation operator to confirm that an event message has been seen. Acknowledging a message silences the workstation beeper, but does not affect the device sending the message.
Acknowledge button	Button in Event Action that lets the user acknowledge an event message. You can click the button using the mouse or touch screen, or by pressing F1 on the keyboard.
Alarm	Device event or state reached when the device detects a fire.
Alert box	Type of dialog box used to display warnings or error messages and requiring a user response.
Annunciation	Visual and/or audible indication of alarm or other states. FireWorks is an annunciation and control system that uses graphic representations of the site to speed device identification and response.
Application	Major program that is part of FireWorks. Examples: System Control, System Builder, Icon Editor. Also referred to as a program.
Arrow keys	Keys on the workstation keyboard that control cursor movement. These keys have arrows printed on them. We refer to the separate keys as Up, Down, Left, and Right.

B

Boot	Automatic startup process used by the computer. Boot or reboot also refers to restarting the computer without turning the power off. See also Reboot.
Border	Outline around a TSA or icon. FireWorks controls the appearance of borders to indicate device states. The border flashes until the event message is acknowledged.

Branch	Switch the Map Display to a different map. Branching is controlled by user-defined TSAs or by (predefined) standard control buttons.
Button	Feature of a graphical user interface that is activated by clicking with mouse, touch screen, or keyboard. Buttons represent commands. TSAs and icons are often referred to as buttons.

C

CAD	Computer Aided Design.
Click	Move the mouse pointer over an object and press the left mouse button once. This term is also used for equivalent touch screen or keyboard actions.
Client	Although the term server is used to indicate the master database, the FireWorks LAN does not have a conventional client / server structure. See also Database.
Command button	See Command TSA.
Command icon	Type of icon that executes a list of system commands when activated.
Command list	Device response lists defined for a command TSA or command icon. See also Response list.
Command TSA	Type of TSA that executes a list of system commands when activated. The FireWorks System Administrator has details on the use and function of each command TSA. Command TSAs are only active if the user access privileges include those commands.
Configuration	Specification of the characteristics of a system or system component. Programs used to define user or hardware profiles.
CPU	Central Processing Unit.
Current map	Map currently displayed in Map Display.
Cursor	Block or I-beam shape that represents the text insertion point. Cursor is often used as a synonym for pointer. Strictly speaking, however, the pointer indicates the mouse position, while the cursor indicates the text insertion position.

D

Default settings	Values provided by the system when no user values are supplied.
Definition box	Dialog box used to define an object. Example: TSA or icon definitions. We also refer to definition dialog boxes as definition sheets.
Definition sheet	Dialog box used to define an object.
Desktop	Stable display area of a program that uses windows. Windows open within a given desktop.
Destination map	Map to which a TSA or other button links. When the TSA or button is clicked, Map Display switches its display from the source map to the destination map.
Device	Field device connected to a control panel.
Device event	Change of state resulting in an event message. The events are named for the resulting states.
Device icon	Type of icon that represents a field device(s).
Device ID	ID that defines the field device in FireWorks. EST2/IRC3/FCC format: UUNNLLPPDDDD (Unit, Node, Line, Panel, Device), EST3 format: UUNNPPCCDDDD (Unit, Node, Panel, Card, Device)
Device map button	Standard Map Display button that branches to the map containing the device in question. The device is the earliest unacknowledged active point.
Device state	See Device event.
Dialog box	Feature of a graphical user interface similar to a window, but without resize or window control menu functions. A dialog box presents information and gathers user entries or responses. Usually, dialog boxes must remain in the foreground until completed and closed.
Dimmed	Button, icon, or command that is not available. These are displayed with gray text.
Double-click	Move the mouse pointer over an object and press the left mouse button twice (in rapid succession). This term is also used for equivalent touch screen or keyboard operations.
Down	Keyboard key with the down arrow. See also Arrow keys.
Drag	Point to an object, press and hold the left button, then move the mouse pointer. The object moves

	along with the pointer. Release the button to release the object.
Drawing	Graphical portion of a map or icon. Also the bitmap (BMP) or icon (ICO) file holding the drawing.

E

Edit	Revise the contents of a field, record, or file.
EST2, EST3	Fire alarm control panels manufactured by Edwards Systems Technology.
Event	See Device event.
Event list	See Event message list.
Event message	Message displayed in Event Action when a device signals a change of state event. Each message consists of: Event type, priority, location, date/time, description, count
Event message list	List of event messages displayed in Event List.
Extended message	Long message assigned to one state of a device.

F

FASTEST	Test of the installed initiating devices that does not activate the notification appliances.
FCC	Fire Command Center. A multiline fire network controller manufactured by Edwards Systems Technology. FCC supports fire panels, graphic annunciators, and system-wide controls.
Field	Data entry box. While field can also refer to site locations, we usually mean a data entry field capable of displaying or accepting character values.
Field device	Initiating, indicating, or controlling devices installed at the protected site, usually remotely from the controlling fire panel.
Filename	System label for a file. The filename is composed of a root segment and an extension.
Fire network	Control panel and one or more lines of devices.

Flash	Alternate between two colors. TSA and icon borders flash to show unacknowledged event messages or device states.
Formula 2-DC unit	Connects FireWorks workstations to a token ring network. Can also connect HLNIC units.

G

General icon	Type of icon that is a passive image only. General icons are used like stickers to show the location of fire extinguishers, first aid kits, and the like.
Graphics package	Any program that creates drawings.
Grayed out	See Dimmed.

I

Icon	Small, predefined symbol that represents a physical device(s). Icons on maps show the location of devices. Icons have borders that indicate device events and states. Icons can also be used to issue system commands.
Initiating device	Device that detects an alarm, supervisory, monitor, or security condition and reports this event to a control panel.
IRC-3	Intelligent Response Controller. A fire alarm control panel manufactured by Edwards Systems Technology.

L

Legend map	Map that contains mostly text and does not represent a physical area of the site.
Line	Data transmission circuit between a fire control module and its field panels.
Log off	Release control of a workstation.
Log on	Take control of a workstation by entering your user ID and password.

M

Map	Drawing of an area of the site, showing connections to other maps (TSAs) and devices (icons). A configured map consists of a drawing and a configuration or definition sheet.
Map drawing	Graphical portion of a map. Also the bitmap (BMP) file holding the drawing. A configured map consists of a drawing and a definition sheet.
Map library	Collection of maps used by FireWorks for the site in question. See also Map system.
Map system	Collection of maps connected by TSAs that defines the site for FireWorks. The highest level map is an overall site map that shows the entire building or complex of buildings. The site map branches down to more detailed maps of individual buildings or single floors. When you click a TSA you branch to a specific map. Standard buttons included in Map Display perform other map navigation functions.
Map TSA	Type of TSA that causes Map Display to branch to a new map. The border is active for use in annunciation.
Menu bar	First or second line of a window, containing the window's pulldown menus.
Messages waiting	Counters that show the number of messages from fire networks that are waiting to be acknowledged. The Remote Messages Waiting counter displays the number of messages from a remote workstation.
Multiplex signaling	Data communication where two or more messages from remote devices are interleaved or transmitted simultaneously over the same line.

N

Node	A control panel.
Notification appliance	Device that alerts site occupants to an alarm condition. Examples: Bell, strobe, speaker.

P

Panel command	Command that can be issued from a fire control panel or from System Control. System Control lets the user issue commands without having to use the control panel. Panel commands are also called system commands.
Parent map	Standard Map Display button that branches to the source map for the current map. This is usually the same as branching up one level in the map system.
Pointer	Arrowhead or other shape that represents the mouse position. Pointer is often used as a synonym for cursor. However, the pointer actually indicates the mouse position, while the cursor indicates the text insertion point.
Popup list	Selection list that opens in its own box when needed.
Previous map	Standard Map Display button that branches to the map displayed previously. Clicking this button has the effect of toggling between the last two maps displayed.
Program	Major program that is part of FireWorks. Examples: Map Editor, System Control, or System Commands. Also referred to as an application.
Protected site	Site covered by the FireWorks system, whether single or multiple buildings.

R

Reboot	Restart the computer without turning the power off.
Response	For each event, a command can be executed when the device signals the event.
Restore	Device event. The device returns to its normal state from an off-normal state.
Runtime variable	Variable loaded when a program starts.

S

Secondary map	Map connected by one primary and one or more secondary links. This is a map that can be reached from several places in the map system.

Selection list	List from which you can select one or more items. Selection lists are often used when you must enter one of several values in a data field. You select items by positioning or toggling a highlight bar.
Service notice	Passive map (drawing) that shows name and contact information for system servicing.
Session	Cycle of starting, working with, and stopping a program or system.
Shortcut menu	A menu that appears when you right-click an object. It lists commands that apply only to the selected object.
Shutdown	Process that brings a program to an orderly close.
Site map	Top-level map in a map system. Also, a standard Map Display button that branches to the top-level map.
Source map	Map from which a TSA or other button links. When the TSA or button is clicked, Map Control switches its display from the source map to the destination map.
Stand-alone	FireWorks system or workstation designed to operate as a single unit. Stand-alone systems use a single workstation and do not use a token ring network.
State	See Device event.
Status bar	Bottom line of the System Control screen. The status bar shows system operating status information.
Status zone	Type of device zone that does not require acknowledgment of event messages. Status zones are useful for indicating the status of auxiliary equipment.
Supervisory open	Device event. The device has lost supervision or has an open circuit.
Supervisory short	Device event. The supervisory device has closed its circuit.
System command	See Panel command.
System configuration	Process of configuring the FireWorks software to match the hardware used by the system.

T

Time-out	Security feature that logs a user out after a period of inactivity.
Title bar	First line of a window, showing the window's name. Drag the title bar to move the window anywhere on screen.
Tool button	Shortcut for a command on a pulldown menu. Clicking the tool button is the same as choosing the command.
Trouble	Device event indicating equipment failure, circuit failure, a fault condition, or an operational malfunction.
TSA	Touch Sensitive Area.
TSA borders	See Border.

U

Unit	Workstation. The FireWorks computer and its peripherals-monitor, keyboard, mouse, and printer.
User	End user of the system. In general, a user could be any member of the staff.
User configuration	Process of defining the system users and setting their privileges.
User level	Field defined in System Builder that shows the access privileges allowed.
User profile	Settings made during user configuration that define the user's privileges.

V

Virtual point	Device icon or zone TSA that is not connected to a field device, but is used as an auxiliary indicator within FireWorks.

W

Window control menu	Menu of standard window control commands. Open the window control menu by clicking the box in the upper-left corner of the window.
Work area	Central portion of a window in which you work, as

	opposed to the menu and tool bars.
Workstation	Unit. The FireWorks computer and its peripherals-monitor, keyboard, mouse, and printer.

Z

Zone TSA	Represents a group of devices of the same type on the same map. A zone TSA uses a list of devices rather than separate device icons.

Hiding and showing TSAs

System Control has the option of showing or hiding the outlines for TSAs in the normal (non active) state. This can help reduce screen clutter. TSA borders toggle ON and OFF by selecting Hide Inactive TSAs.

To hide TSA borders:

1. From the Edit menu, click Hide Inactive TSA or press F4.

   Note: TSAs that are not in the normal state will not turn OFF.

To show TSA borders:

1. From the Edit menu, click Hide Inactive TSA or press F4.

History tab

Use the History tab to create and view the active and archived history for your system.

History Source

Active history: All events that have not been archived. The system stores approximately 10,000 events that can be viewed before they must be archived. Events can be archived at any time.

Selected Archive: Events that have been archived into a single file. These can be viewed at any time.

Current Selected History: The file, number of records, and start and end date of the current history.

Archive Active History button: Archives all of the events in the currently active history.

Archived History Files: A list of the previously archived history files. These can be selected and opened.

Create Report button: Creates a report based on the criteria selected.

Go To button: Goes to a specific row in a report.

Find button: Finds a word or text in a report.

Filter button: Filters a report based on certain criteria selected by the user.

Save button: Saves the report.

Print button: Prints a report.

Report timeout (seconds): 30 seconds is the default time period for FireWorks to receive a report from the panel. If more time is required due to your request timing out, increase the timeout period. Timeout can be set from 30 to 1,000 seconds.

Card Information button: Opens the Card Information dialog box, which displays all card information associated with the event record that is selected.

Cancel button: Cancels (removes) the information you are currently entering. It does not remove information that was already applied or added. Also closes the dialog box.

Icon colors

Icons have borders with different colors. Each of the colors shows what is taking place with the icon. During system events, the border flashes and changes color depending on its type. A solid icon indicates the status of the device by the color of its border. A flashing icon contains the current device event and requires acknowledgment.

Icon types, colors, and state

Type	Color	State
Device	Blue	Normal
	Red	Alarm
	Yellow	Trouble, supervisory, monitor
	Green	Restore
	Grey	Disabled
	Orange	Security (alarms)
Command	Black	Normal (always black)
General	Brown	Normal (always brown)

Notes

- EST2, IRC-3, and FCC security points are annunciated as Troubles (yellow).
- EST3 partitions (away, stay, away fail, stay fail, entry delay, exit delay) are yellow.

Icon overview

Icons are small, predefined symbols that represent physical devices (e.g. smoke detector, waterflow, card reader controller, fire extinguisher etc.) in your system. Icons are placed on maps to show the location of devices. Icons have borders that indicate device events and states. In addition, you can left- or right-click an icon to perform a function or display information.

The border of an active icon flashes until you acknowledge the event. Icon borders are color-coded to show device state.

Icon types

There are three types of icons.

Device icon

A device icon is defined as one or more devices. A device icon is normally found on device maps and control maps (e.g. smoke control). If any of the devices in the group changes state, the device icon border flashes. To view information concerning the icon, left- or right-click the icon.

Command icon

FireWorks can issue system or panel commands directly to fire networks. A command icon does not represent a device. Rather, it defines a set of panel commands. When you click a command icon, you can review or execute these commands.

You can use a command icon to execute any command found on the System Commands menus. Other than issuing commands, command icons are passive. They have a black border and do not flash or change color.

General icon

General icons are passive. They do not show device states or issue commands. General icons have a brown border. They are a convenient way to have images on your maps.

General icons are typically used to show the location of equipment that is not connected to a fire network. For example, you could use general icons to show the location of fire extinguishers or first aid kits.

Image display

Use the Image window to display all movie (AVI) and still picture (BMP, JPEG, WMF, and RLE) images. This window is used to display images or movies relating to certain devices or areas when know video images are available for those devices or areas. This window is displayed in place of the Camera View window when activated from an event.

Image selection list: Contains images and movies that you can display on your system. Click the drop-down arrow to select an image or movie from the list.

Toolbar buttons	
Button	**Definition**
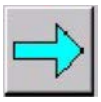	Play: Plays the selected movie file
	Stop: Stops the movie from playing
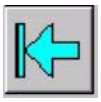	Restart: Restarts (replays) the movie from the beginning
	Browse image files: Allows you to select the image file(s) that you want to display

IRC-3/FCC/EST2 command types

The following is the system command type summary matrix for IRC-3, FCC, or EST2 systems.

	Activate	**Restore**	**Enable**	**Disable**	**System**
Actions	X	X	X	X	-
Sequences	X	X	X	X	-
Tests	X	X	-	-	-
Time controls	X	-	X	X	-
Lines	-	-	X	X	-
Panels	-	-	X	X	-
Zones	-	-	X	X	-
Reset	-	-	-	-	X
Drill	-	-	-	-	X
Alarm silence	-	-	-	-	X
Outputs	X	X	X	X	-

Smoke level	-	-	-	-	X
Set time	-	-	-	-	X
Set date	-	-	-	-	X

Issuing a partition command

A partition is group of devices that protect a certain area. Issuing a partition command affects all of the devices assigned to that partition.

The different partition commands are:

- Arm stay (perimeter only): Arms only the perimeter devices in the partition. Internal devices do not issue alarms.
- Arm away (all armed): Arms all of the devices in the partition. All devices can issue alarms.
- Disarm partition: Disarms the partition. No alarms are issued.
- Update status: Updates the current status of the partition.
- Reset partition: Resets the partition by clearing out all messages at the panel, keypad displays, and in the Event List display. To reset a partition, the partition must be disarmed.
- Arm anyway (stay): Arms only the perimeter devices in the partition even if a device is in alarm.
- Arm anyway (away): Arms all of the devices in the partition even if a device is in alarm.

To issue a partition command:

1. From the Applications menu, click Partition Commands.
2. Select the Node that the partition is assigned to.
3. Select the Partition.
4. Review the current status of the partition.
5. Click the desired partition command.

Issuing a system command

Issuing a command involves selecting a device to receive the command, then selecting the command that you want to send. Only certain types of command are available for certain devices.

Note: FireWorks issues single commands or sets of commands in the order they are placed in the command set. For example, if the command set includes ten commands followed by a Reset command, the ten commands are processed first and then the Reset command.

Note: FireWorks issues commands using a low priority. If you need medium or high priority commands, program the commands in an SDU command list then have FireWorks activate the command list.

To issue a command:

1. From the Applications menu, click System Commands.
2. Select the device to receive the command. Click the "plus" symbol to navigate to the device.

   If you know the device's label or address, use the Find button to quickly find the device you are looking for.
3. Select the command.
4. If prompted, select the argument criteria for that command and device.
5. Click Issue Command.
6. Monitor the status of the command in the status bar or click Command Status to open the Command Status dialog box.

Key features of System Control

The following are the key features of System Control:

- Window based user interface
- Customization of quadrant layout
- Acknowledge capability
- Alarm, supervisory, trouble, and monitor indication
- Log entry
- New events list
- Acknowledged events list
- All events list
- Messages waiting
- Alarm silence control
- Panel silence control
- Drill control
- Reset control
- Graphical map display
- Quick map selection
- Map zoom control
- Multiple map switching control
- TSA (touch sensitive area) map jumping
- Device icon representation on maps
- System control with use of TSAs
- History reports

- System reports
- Diagnostic reports
- Standard reports
- Task scheduling
- Event Action and Event List configuration
- Automatically printing events
- Sizing the quadrant windows

Keyboard shortcuts

Each menu item and command has a keyboard shortcut or hot key associated with it. Hot keys are shown on the menus as key combinations or as single keys. Key combinations are displayed to the right of the menu item. Single keys are shown as underlined letters in menu items.

The function keys are also used for keyboard shortcuts:

- F1 - Help
- Shift + F1 - Acknowledge current event
- F2 - Node status
- F3 - Command status
- F4 - Hide/show TSAs
- Shift + F4 - Alternate language
- F5 - Display device map
- F6 - Print current event map
- F7 - Display site map
- F8 - Logon/logoff
- F9 - Display parent map
- F10 - Moves cursor to Menu Bar
- F11 - About/version info
- F12 - Workstation silence

Layout Manager dialog

Use the Layout Manager dialog box to manage and configure different screen (window) layouts for System Control. Each of the windows can reside in any area on the screen. A variety of predefined layouts are available, but you can also customize your own layout. The default layout is the four-quadrant layout.

Save Layout button: Saves the selected layout with the name specified in the "Save current layout as box".

Delete Layout button: Deletes the selected layout.

Layouts: A list of the predefined layouts and the layouts you saved.

Apply Layout button: Applies the layout that is selected in the Layouts list.

LED definitions

Event indication LEDs notify you that a certain type of event is taking place in your system. The number associated with each LED indicates the number of events that are in the system for that event type and is called the event counter.

Note: If security devices go in and out of a state, the event counter increments for each change of state. This means that one security device could increment the event counter each time it changes state.

An LED blinks ON and OFF until the event is acknowledged, then it stays ON steady. Once the event is restored, the LED turns OFF and the event number changes to zero, provided there are no other events of that event type.

You can click on an LED to display the Active Devices dialog box. This dialog shows which devices are active in that state. This can be useful when you are looking for specific devices.

Six LEDs provide indication of events. They are:

LED	Color
Alarm	Red
Security (alarms)	Orange
Supervisory	Yellow
Trouble/Disabled	Yellow
Alert/Monitor	Yellow
Alarm silence	Yellow

Notes

- When an LED is green, a partition reset is required.
- EST2, IRC-3, and FCC security points are annunciated as Troubles (yellow).

Logging on and off

Before you can log on to System Control, the last user must log off. The User field on the status bar should show NONE as the User ID. When you leave the workstation, you should log off.

To log on to the system, the following information is required:

- User ID: A 1 to 12 character word used to identify you to the system
- Password: A 1 to 12-character coded word used to allow you access to the system. An asterisk (*) appears in place of each letter in your password.

To log on to System Control:

1. From the File menu, click Logon/Logoff or press F8.
2. Type your user ID.
3. Type your password.
4. Click Logon or press Enter to complete the process.

   If you choose not to continue, click Cancel.

To log off from System Control:

1. From the File menu, click Logon/Logoff or press F8.
2. Click Logoff.

Note: If a timeout period is set up for a user account, the user is automatically logged out when the timeout period expires.

Logon/Logoff dialog

Use this dialog box to log on or log off. Before a new user can log on, the previous user must log off.

User: The User ID is a 1 to 12 character word used to identify you to the system.

Password: A coded word used to allow you access to the system. An asterisk (*) appears in place of each letter in your password.

Logon button: Logs the user on to the system.

Logoff button: Logs the user off of the system.

Cancel button: Cancels (removes) the information you are currently entering. It does not remove information that was already applied or added. Also closes the dialog box.

Making a log entry

When events take place in your system, you may need to document important information about the event or associated elements of the event. The Log Entry tab lets you log information for each event. The logged information is attached to the event and can be viewed at any time in History Viewer or by clicking the event in Event List (up to 1,000 events).

Note: Only text can be entered in the log.

To make a log entry:

1. In Event List, select the event to which you want to attach a log entry.
2. Click the Log Entry tab in Event Action.
3. Click in Create/Edit Log Entry.
4. Type your log message.
5. Click Save.

Map Display terminology

Click: Point to any item on the screen and click the left mouse button.

Device event: A change of state indication received from a device connected to a networked system.

Device, point, or zone: A piece (or group) of hardware (smoke detector, control module, strobe, speaker, card reader controller, or heat detector) that is directly connected to a fire alarm network.

Touch sensitive area (TSA): A colored outline around a graphic figure. Four types of TSA are used in System Control: map, device, general, and command. A TSA can sense a mouse click within its border. These are interpreted by the computer as commands.

Map TSA: A map TSA around a graphic indicates a branch to a lower level map. The color of the TSA border signifies the current highest priority or state of the devices contained within the TSA.

Clicks on a map TSA are interpreted by the computer as commands to branch through the maps associated with that TSA, heading towards the device map. You can backtrack through the maps by clicking the Parent Map button.

Normal state TSAs may or may not be visible on the screen depending on operator preference. Active TSAs are always visible.

Command TSAs: Buttons that send predefined system commands to the networked system. Clicking a command TSA opens a popup menu that lets you execute or review the commands. Choosing Execute sends the commands. For example, command TSAs could be used to control the site HVAC system.

Your System Control system has TSA buttons that were customized for your facility. Please see your FireWorks system administrator for specific details on the functions of each command TSA button.

Command TSAs are displayed in black.

Device TSAs: Device TSAs are made up of one or more devices.

Icon: A small graphical representation of a device or a command function. Icons are placed on maps to show device locations. Each icon has a border.

Device icons: Device icons are made up of one or more devices.

Command icons: A command icon acts like a button that sends a list of commands to the network control panel. Clicking the icon and choosing Execute sends the commands.

Node: A workstation term indicating an individual fire network.

Dimmed: The visual representation of a System Control command or button with dimmed or gray text. When a button or menu item is dimmed, its function is not available to you.

Map display

Use the Map window to display a graphical representation (map or group of maps) of your site. Maps contain device icons, TSAs (Touch Sensitive Areas), and text. Each are used to relay important information about the status of your system.

Map selection list: Contains all of the maps that make up your system. From anywhere or at any time, you can click the drop-down arrow and select a map from the list.

Toolbar buttons	
Button	**Definition**
	Map tree: Displays an explorer view of all maps, TSAs, and devices associated with your system. Maps, TSAs, and devices can be accessed directly by clicking the desired item.
	Parent map: Branches up one map level from the current map. This is like following a TSA link in reverse, from destination map to source map. (Keyboard shortcut F9 and on the Functions menu.)
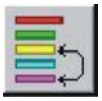	Previous map: Switches back to the map previously displayed. Clicking this button repeatedly toggles the display between the last two maps displayed.
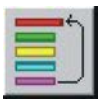	Site map: Branches directly to the site map from any location in the map system. The site map is the main map which is displayed when no active alarms are present. (Keyboard shortcut F7 and on the Functions menu.)

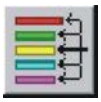	Device map: Branches directly to the map with the highest priority active device from any location in the map system. (Keyboard shortcut F5 and on the Functions menu.)
	Zoom in: Enlarges the viewing size of a map. Zooming in is much like moving toward a picture to get a better look at it.
	Zoom out: Reduces the viewing size of a map. Zooming out is much like moving away from a picture to get a better look at it.
	Zoom select: Used to draw a box around an area of a map to zoom in on
	Zoom 1-to-1: Displays the map at actual size
	Map overview: Displays a pop-up window of the entire map. This can be helpful if you are zoomed in to a certain area on the map and want to see an overview of the whole map at the same time.

Map colors

Text on a map is displayed in blue.

TSA types, colors, and states		
Type	**Color**	**State**
Device and Map	Blue	Normal (device)
	Cyan	Normal (map)
	Red	Alarm
	Yellow	Trouble, supervisory, monitor
	Green	Restore
	Grey	Disabled
	Orange	Security (alarms)

Command	Black	Normal (always black)
General	Brown	Normal (always brown)
Secondary map	Gold	Normal (always gold)

Icon types, colors, and states		
Type	**Color**	**State**
Device	Blue	Normal
	Red	Alarm
	Yellow	Trouble, supervisory, monitor
	Green	Restore
	Grey	Disabled
	Orange	Security (alarms)
Command	Black	Normal (always black)
General	Brown	Normal (always brown)

Notes

- EST2, IRC-3, and FCC security points are annunciated as Troubles (yellow).
- EST3 partitions (away, stay, away fail, stay fail, entry delay, exit delay) are yellow.

Map tree dialog

The Map Tree displays all of the maps, TSAs, icons, and text that make up your system. The top-level map is your site map. Under the site map, TSAs branch to other maps that may contain other TSAs and/or icons. When you double-click a map, TSA, or icon, it displays in the map display area. Icons are used to indicate the different tree entries: maps, TSAs, icons, or text.

Cancel button: Cancels (removes) the information you are currently entering. It does not remove information that was already applied or added. Also closes the dialog box.

Menu bar options

The menu bar has seven menus. Each menu contains commands that perform specific tasks.

File menu

Logon/Logoff: Lets you log on to or off from System Control.

Exit: Quits System Control.

Edit menut

Cut, copy, paste: Allows you to cut, copy, and paste information.

Functions menu

Acknowledge Current Event: Acknowledges the currently active system event.

Silence Workstation: Silences the computer and any sound files that play during system events.

Hide Inactive TSAs: Hides or shows inactive TSAs on maps.

Print Current Event/Map: Allows you to print the current map and/or event.

Configure Auto Print Events/Maps: Opens the Configure Automatic Printing dialog box, which is used to enable and configure the automatic printing of event information when specific events occur in your system.

Display Device Map: Displays the map containing the device that triggered the event.

Display Site Map: Displays the site map for your location.

Display Parent Map: Displays the map that is one map level above the current map.

Restore Default Layout: Returns the layout of the screen to the default layout of the user who is logged on.

Arrange: Allows for changing the screen layout by cascading the windows and tiling the windows horizontally or vertically.

Change Language: Lets you select a different language.

Alternate Language: Toggles the display language between your primary and alternate language. These are set up in User Manager.

Event Selection Method: Lets you specify how events are selected in Event List when they take place in the system.

- Maintain Selected Event (default): The selected event always stays selected no matter what other events take place.
- Select High Priority: Selects the highest priority event in the system. The selected event does not change if a new event of equal or lower priority takes place.
- Select Newest: Selects the most recent event regardless of its priority.
- Select Newest (if higher or equal priority): Selects the newest event only if its priority is equal to or greater than the currently selected event.

View menu

Map Display: Starts the Map display and allows you to place it into a quadrant.

Camera Display: Starts the Camera display and allows you to place it into a quadrant.

Event List: Starts the Event List display and allows you to place it into a quadrant.

Event Action: Starts the Event Action display and allows you to place it into a quadrant.

Image Display: Starts the Image display and allows you to place it into a quadrant.

HTML Browser Display: Starts the Browser display and allows you to place it into a quadrant.

Status menu

N**ode status:** Displays the Unit Status dialog box, which is used to view a line-by-line status of all nodes in the system.

Command status: Displays the Command Status dialog box, which is used to view the status of all commands issued.

Watchdog card status: Displays the Watchdog Card Status dialog box, which is used to view the status of the fans, voltage, temperature, etc. inside the workstation computer.

Printer status: Displays the Printer Status dialog box, which is used to start or stop printing, purge the printer, and monitor the different queues. Note: this is only used with the PT1-P printer.

Diagnostic status: Displays the System Diagnostic Status dialog box, which is used to view and/or print system status messages. These are FireWorks application-specific messages.

Net Module Status: Displays the Net Module Status window, which is used to view the status of IP enabled modules (e.g., MN-FVPN and MN-NETRLY4 modules).

Applications menu

System Commands: Starts the System Command application, which is used to issue commands to the system.

Partition Commands: Starts the Partition Command application, which is used to issue commands to partitions in your security system.

Report Application: Allows you to generate history reports, standard reports, point I/O status reports, diagnostics reports, and open previously saved reports.

Layout Manager: Starts the Layout Manager, which is used to manage the quadrant layout view for System Control.

ACDB Interface Config: Opens the ACDB/FireWorks Interface Configuration dialog box, which is used to configure the location of the ACDB interface and the card information display fields (name, card ID, address, etc.).

Edit Email Addresses: Opens the Edit Email Addresses dialog box, which is used to enter new e-mail addresses or edit e-mail addresses that were previously entered.

Edit All Email Actions: Opens the Edit All Email Actions dialog box, which is used to update and edit e-mail actions.

User Manager: Starts the User Manager application, which is used to add users, change passwords, and set up access privileges.

System Builder: Starts the System Builder application, which is used to program and set up a system.

Icon Editor: Opens a dialog box that contains the path to the Icon Editor application (MS Image Editor). If you want to use a different graphics editor program, change the path in the dialog box to open the graphics program you want to use.

Map Editor: Opens a dialog box that contains the path to the Map Editor application (MS Paint). If you want to use a different graphics editor program, change the path in the dialog box to open the graphics program you want to use.

Help menu

Contents: Opens the Help window for System Control.

Index: Displays the Help window Index tab.

Search: Displays the Help window Search tab.

Technical support: Displays contact information for technical support staff.

About/Version info: Displays the About FireWorks dialog box, which contains version and copyright information and the company name.

Navigating the system

It's easy to navigate through System Control's suite of integrated components. Features are organized in various parts of each window display according to their purpose. You can navigate to any component with a simple click of the mouse. With component display tabs, such as in the Event List and Event Action display, you simply click the tab that corresponds to the component that you want to use and it appears on top of the other tabs.

To use the menu bar:

1. Choose the appropriate menu and select a command from the drop-down list.

To use the toolbar:

1. Click the button on the toolbar that corresponds to the command that you want to use. Window displays have their own toolbars.

To use the shortcut menu:

1. Place the cursor on the item that you want to work with, press the right-mouse button, and then select a command from the menu.

Note: The shortcut menu is primarily used in Map Display for viewing icon and TSA information.

To use the tab components:

1. Click the tab that corresponds with the component that you want to view or use.

Net Module Status

Use the Net Module Status window to view the status of MN-NETRLY4 modules. The window displays the following information for each MN-NETRLY4 module:

- Label
- Communication status
- Description
- IP address

Net Module Status

Use the Net Module Status window to view the status of IP enabled network modules (e.g., MN-FVPN and MN-NETRLY4 modules). The window displays the following information for each IP enabled network module:

- Label
- Communication status
- Description
- IP address

To view the status of IP enabled network modules:

1. On the Status menu, click Net Module Status.

Node Status dialog

Use the Node Status dialog box to monitor the status of each of the nodes (control panels) connected to your system. The status of the nodes is reported by the LEDs and descriptions in each of the columns.

Node column: The number for the node (panel).

Label column: The label for node (panel).

FACP State column: LED ON indicates the overall state of the node (alarm, security, trouble, supervisory, alert).

Communications column: The status of the node's communications (LED Green = OK, LED Yellow = Fault).

Alarm Silence column: LED ON indicates that the node has been alarm silenced (White = Not silenced, Yellow = Silenced).

Disabled Points: Counter that shows the number of points that are disabled on your EST2/IRC3/FCC system. EST3 systems do not report disabled points.

Active Points: Counter that shows the number of points that are active on your EST2/IRC3/FCC system. EST3 systems do not report active points.

Reset column: LED ON indicates that the panel reset command was activated on the node.

Drill column: LED ON indicates that the drill command was activated on the node.

Alternate Sensitivity column: LED ON indicates that alternate sensitivity was activated on the node.

Page Inhibit column: LED ON indicates that the page inhibit control was activated.

Microphone Pressed column: LED ON indicates that the microphone button was pressed on the node.

All Call column: LED ON indicates that the all call command was activated on the node.

Description column: The description for the node (panel).

Note: N/A in a column means that the node does not report status for that element.

Node status

The Node Status dialog box is used to monitor the status of each of the nodes (control panels) connected to your system. The status of the nodes is reported by descriptions and color coding in each of the columns. The color coding is as follows:

- Green - Normal or OK
- White - Text in the column or off
- Grey - Not applicable
- Yellow - Off normal

Note: EST3 systems report different status information than EST2/IRC3/FCC systems.

The following information is reported about an EST3 system:

- Node number
- Label for the node
- State (alarm, security, trouble, supervisory, alert)
- Communications status
- Alarm silence status
- Reset status
- Drill status
- Lamp test status
- Alternate sensitivity status
- Alarm input status
- Page inhibit status
- Microphone pressed status
- All call status
- AC brown out status
- Description

The following information is reported about an EST2/IRC3/FCC system:

- Node number
- Label for the node
- State (alarm, security, trouble, supervisory, alert)
- Communications status
- Alarm silence status
- Disabled points
- Active points

- Description

To monitor the status of a node on your system:

1. From the Status menu, click Node Status or press F3.
2. Review the status of the node.
3. Click Cancel or Close to close the dialog box.

To monitor the status of a node level alarm silence:

1. From the Status menu, click Node Status or press F3.
2. In the Alarm Silence column, monitor the status of the node's alarm status.
3. Click Cancel or Close to close the dialog box.

Opening a layout

Any of the predefined layouts or any custom layout you create can be opened and used at any time.

To open a layout:

1. From the Applications menu, click Layout Manager.
2. Under Defined Layouts, select the layout you would like to open.
3. Click Apply Layout.

   The layout of System Control automatically updates to your selected layout.

Opening a window display

Windows can be opened, sized, and arranged on your screen in any orientation you prefer. The windows you can open, are: Event List, Event Action, Map Display, Image Display, Camera Display, and Browser Display.

Note: Opening a window is access level controlled. You must have the right access level to open a window. Access levels are set in User Manager.

To open a window:

1. From the View menu, click a display window.

   The window either opens in its previous position or opens in the center of the screen.
2. Size and place the window in the desired location on your screen.

Other command types

Two other device types can receive commands: cameras and watchdog cards. Cameras are the CCTV cameras connected to your system. The watchdog card is FireWorks' internal card that monitors points within the computer.

Cameras

There are many command types for cameras. Because command types are based on the type of switcher and the brand of camera you are using, they cannot all be listed. Refer to your switcher and camera documentation for more information.

Watchdog card (for computer models FW2, FW4, FW2UL2, FW4UL2, FW3UL3, and FW5UL3 only)

Note: The user relays and trouble relay may have unique devices attached. Be sure you understand and know what is connected before toggling the relays ON or OFF. Contact your system administrator for more information.

Command	Description
User relay 1	ON: Turns Relay 1 ON. OFF: Turns Relay 1 OFF.
User relay 2	ON: Turns Relay 2 ON. OFF: Turns Relay 2 OFF.
Trouble relay	ON: Turns the Trouble relay ON. OFF: Turns the Trouble relay OFF.
LED	ON: Turns the LED on the external Switch/LED module ON. OFF: Turns the LED on the external Switch/LED module OFF.
Buzzer	ON: Turns the trouble buzzer ON. OFF: Turns the trouble buzzer OFF.

Overview - Map Display

The Map window displays a graphical representation (a map or group of maps) of your building or campus. Maps contain device icons, TSAs (touch sensitive areas), and text. Each is used to relay important information about the status of your system. A sample window is shown below:

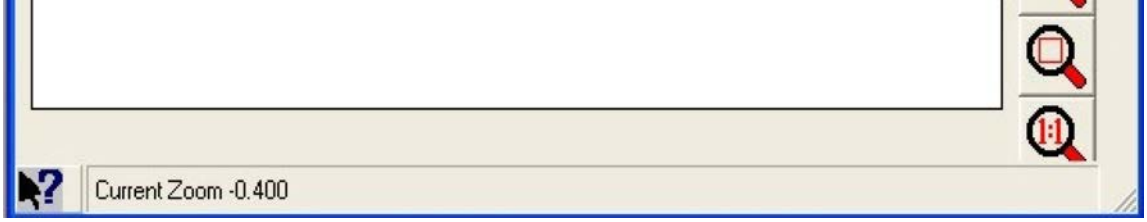

In Map Display, you can navigate from map to map using TSAs or the navigation buttons to determine the exact location of system events. Clicking a TSA causes the system to switch to a more detailed map, such as a device map. This process is called branching.

To *branch* means to move up or down through a tree structure of maps and other graphics by clicking the TSAs or navigation buttons defined on each map. The name of the map is displayed in the map selection list.

Overview - Event List window

The Event List window is the controlling or "main" window. It controls what is displayed in the other windows based on the events that take place in the system. This control method is referred to as "event driven." Information and indication for an event are shared between the windows.

When events take place, they are displayed on the New Events tab. Each window updates to display information related to that event. Clicking on an event also updates the windows to display the related information.

Each event is color-coded by its type and includes set of data configured for the user type of the person that is currently logged on. For more information, see Event data descriptions.

New events are displayed by priority and remain displayed until they are acknowledged. Once the event is acknowledged, it moves into the Acknowledged Events list. The All Events tab displays all of the events that have taken place in your system, up to a maximum of 10,000 events. After that, the oldest events are dropped as new events are added.

Refer to Basic system operation for information on what happens when an event takes place in your system.

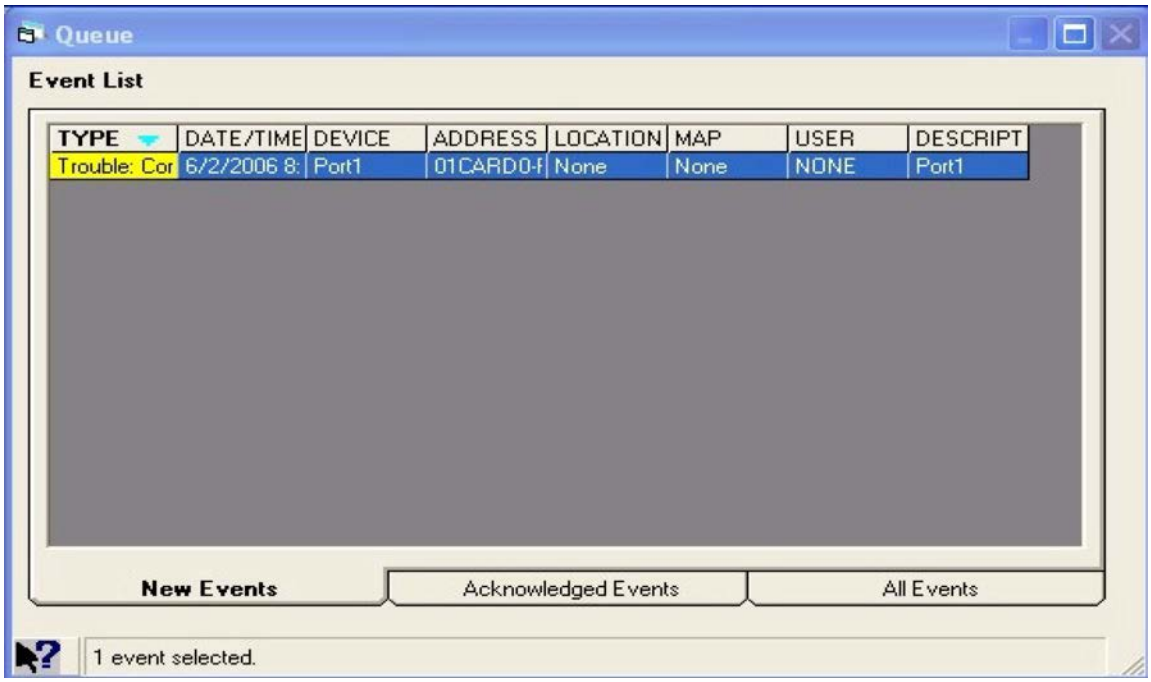

Overview - Event Action window

The Event Action window displays device event messages, flashes a corresponding event LED, and allows you to make a log entry for each event. When configured, card information for access events can also be viewed.

When no events are in the system, the top portion of the Event Message tab displays "Configurable!!!!", which indicates that the system is functioning correctly. This banner can be changed to whatever you like. When events are in the system, the event type (name of event) is displayed in this area.

The Acknowledge button is used to acknowledge incoming events. The Alarm Silence, Panel Silence, Drill, Reset, and Silence Workstation buttons (located on the right-hand side of the window) perform those specific functions.

The three tabs are used to display event related information. The Event Message tab displays messages that correspond to an event. The Log Entry tab is used for logging important information related to the system event. The Card Information tab is used to view card information for access events.

Event Action works hand-in-hand with the Event List window and the Map display window. Information and indication for an event is shared between the displays. Refer to Basic system operation for information on what happens when an event takes place in your system.

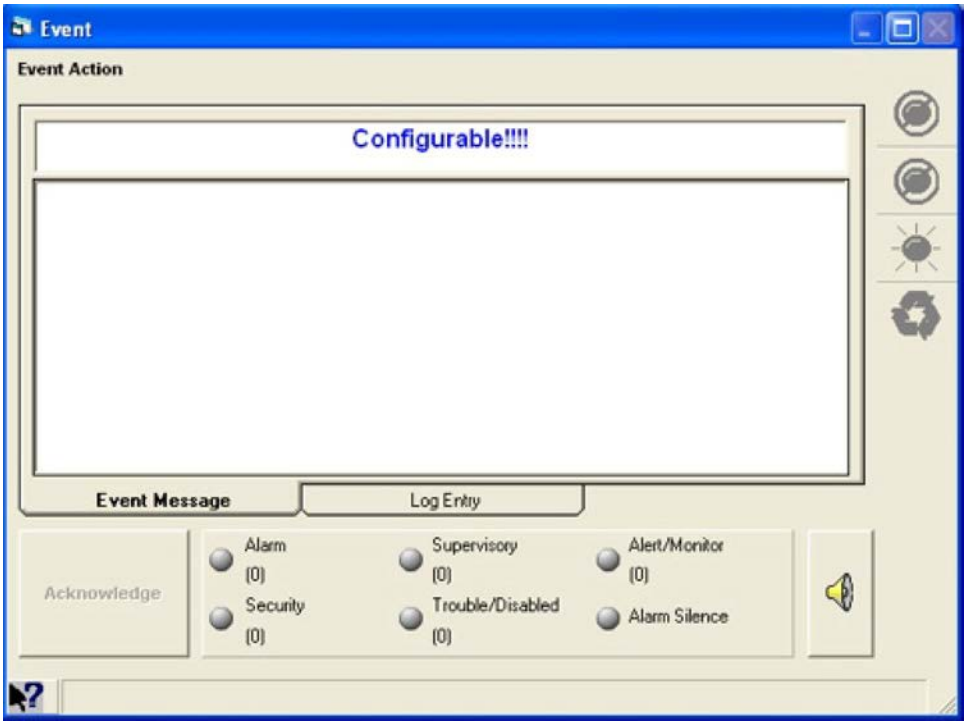

Overview - System Commands

The System Commands dialog box is used to issue system-wide commands. Commands are actions that are sent to a control panel to make something happen or to control something, such as disabling a smoke detector.

Commands such as activate, enable, disable, and reset are available. From this dialog box, devices, actions, and zones can be disabled or activated, panels can be enabled or disabled, and system level functions such as reset, drill, alarm silence, and smoke level can be issued.

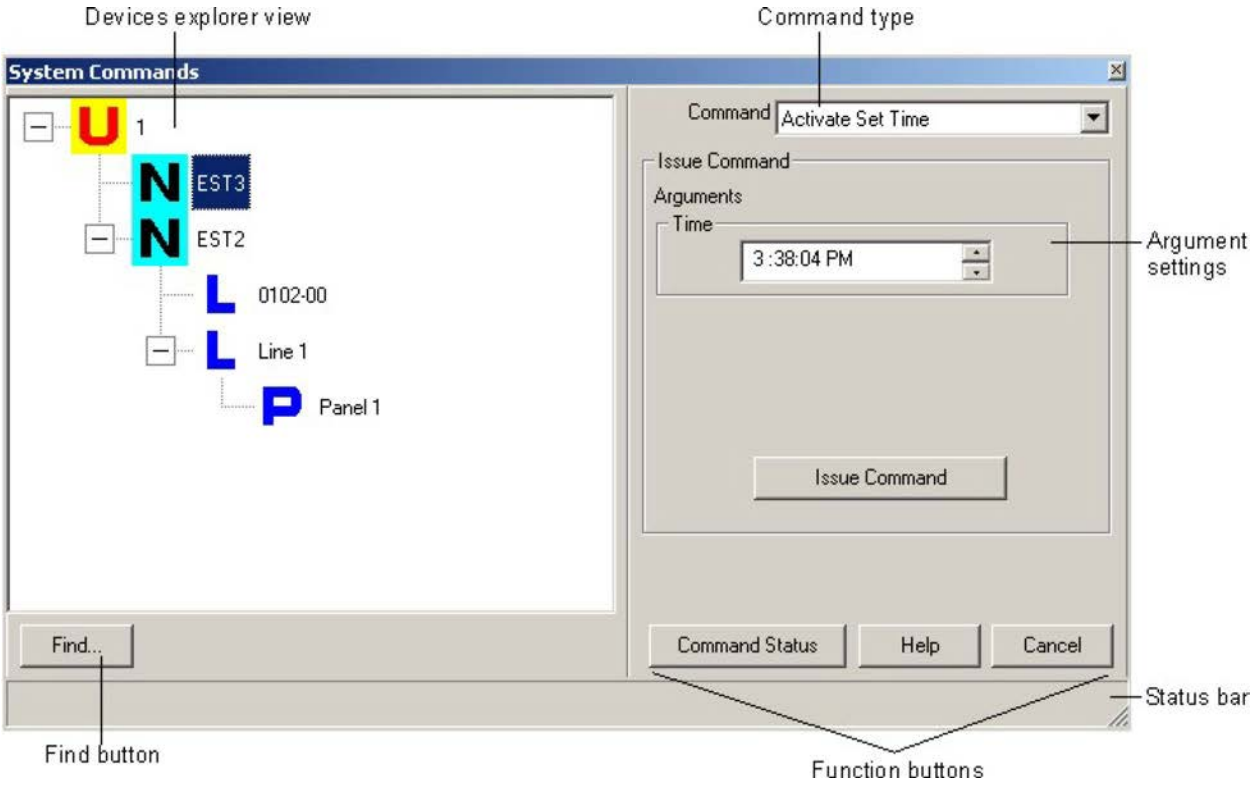

Overview - Camera Display

The Camera window displays all CCTV video. CCTV cameras can be controlled using the pan/tilt, focus, zoom, iris, preset, and sequence buttons (if your camera has these functions). Two drop-down lists let you select any switcher or camera in your system.

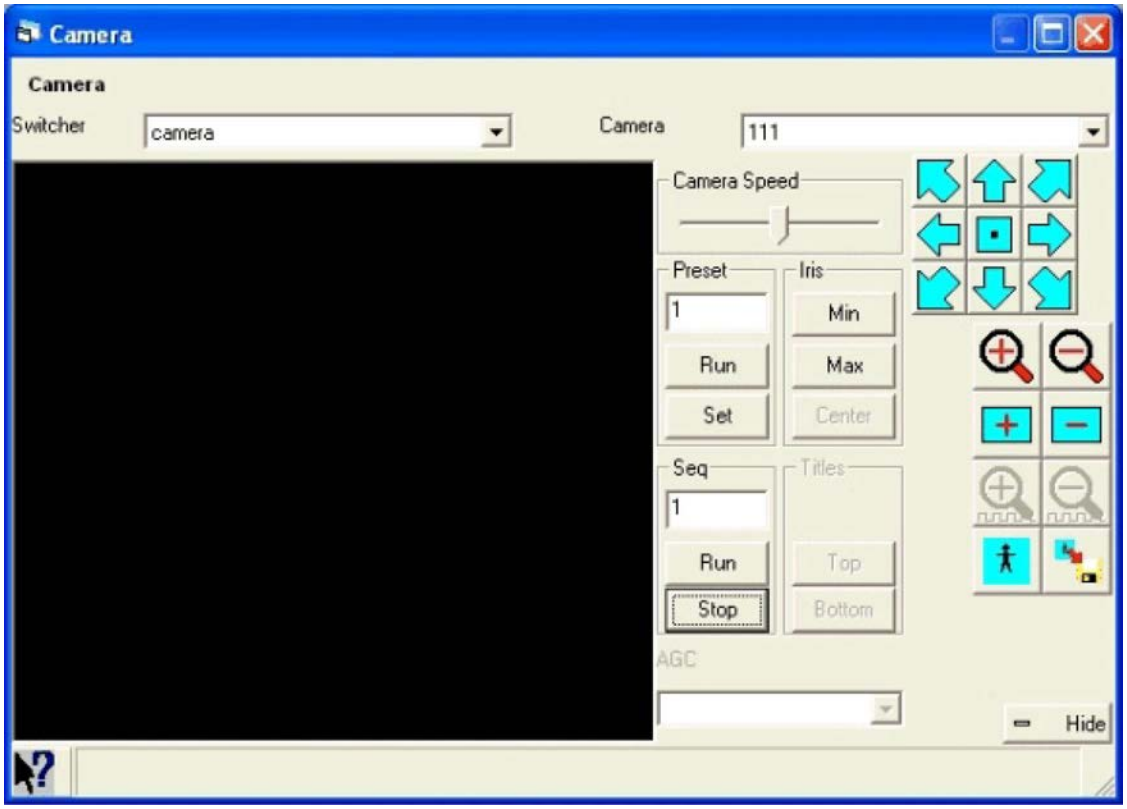

Overview - Image Display

The Image display is the window that displays all movie (AVI) and still picture (BMP, JPEG, WMF, and RLE) images. This window can be used to display images or movies relating to certain devices or areas when no video (CCTV) images are available. When activated by an event, this window displays over the Camera display window (if you are using CCTV).

Overview - User Manager

To create security within the FireWorks applications, features, and functions, use the User Manager application. User Manager lets you enter new system users, change current user passwords, and set up access groups, which control which features and functions users have access to.

There is one built-in user account, ADMIN, which is used only by the system administrator. The password for this account should be changed before the system is fully operational. If an administrator is needed, assign the Administrator access group to the user who needs administrator privileges.

Users must be entered into the system with a user name, password, description, and are assigned to an access group. Once they are entered into the system, they can log on to FireWorks and use all of the features and functions that their access group is permitted to use.

There are four built-in access groups: Admin, Manager, User, and No Access. These groups cannot be changed. They can only be used as "templates" to create other groups. The new group can be "based" on the built-in account, but privileges can be added or subtracted as needed. The No Access group does not allow a user into any of the features, functions, or applications in FireWorks.

Overview - Partition Commands

A partition is group of devices that protect a certain area. Issuing a partition command affects all of the devices assigned to that partition.

The Partition Commands dialog box is used to issue partition commands, view a partition status report, and view the current status of a partition.

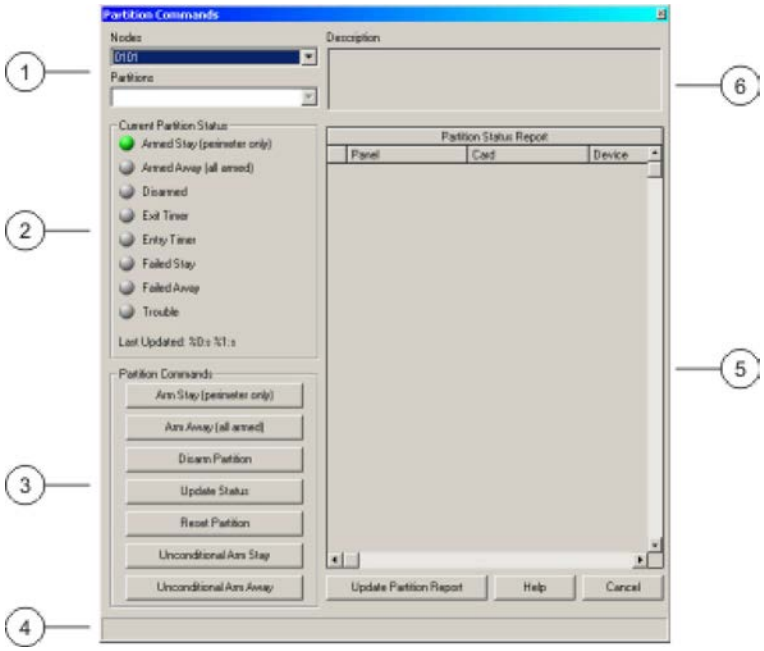

1. Node and partition selection lists
2. Current partition status indicators
3. Partition commands
4. Status bar
5. Partition command status display area
6. Description for the selected partition

Overview - Browser Display

The Browser window displays HTML files and can be used to connect to the Internet to view Web pages.

You may find it necessary to generate HTML files that contain important information about your system. After the files are generated, they can be displayed in the Browser. You can use an HTML editor to create these files.

If Internet access is needed at the workstation, you can use the Browser to gain access to the Web pages needed. This way, you have Internet access and can continue monitoring your system at the same time.

HTML files generated for system use and needed Internet Web pages are easy to access without loading another application.

Overview - Layout Manager

Layout Manager is used to manage and configure different screen (window) layouts for System Control. Each of the windows can reside in any area on the screen. A variety of predefined layouts are available, but you can also customize your own layout. The default layout is the four-quadrant layout.

Layouts can also be assigned to access groups so that they load when a user from that access group logs on to FireWorks. A different layout can be assigned to every access group. See Assigning a screen layout to an access group for more information.

Panning and tilting a camera

Some cameras can be moved up and down or left and right to better monitor an area. The Pan and Tilt buttons allow you to move the camera to exactly the position you desire.

Note: Only one camera can be controlled at a time.

To pan and tilt a camera:

1. Select a camera.

   Refer to Selecting a camera for more information.

2. Click the Pan and Tilt buttons to adjust the position of the camera.

Partition commands dialog

Use the Partition Commands dialog box to issue partition commands, view a partition status report, and view the current status of a partition.

A partition is group of devices that protect a certain area. Issuing a partition command affects all of the devices assigned to that partition.

Node: The node that the partition is assigned to.

Partition: The partition that you want to issue commands to or view information about.

Description: The description for the partition that was assigned during programming.

Current Partition status: LEDs indicating the current status of the partition.

Partition commands

Arm stay (perimeter only): Arms only the perimeter devices in the partition. Internal devices do not issue alarms.

Arm away (all armed): Arms all of the devices in the partition. All devices can issue alarms.

Disarm partition: Disarms the partition. No alarms are issued.

Update status: Updates the current status of the partition.

Reset partition: Resets the partition by clearing out all messages at the panel, keypad displays, and in the Event List display. To reset a partition, the partition must be disarmed.

Arm anyway (stay): Arms only the perimeter devices in the partition even if a device is in alarm.

Arm anyway (away): Arms all of the devices in the partition even if a device is in alarm.

Partition status report: Displays all of the devices in a partition that are in an off-normal condition or bypassed.

Update partition report button: Updates the status report with the latest information.

Cancel button: Cancels (removes) the information you are currently entering. It does not remove information that was already applied or added. Also closes the dialog box.

Playing a movie file

There are two ways to play a movie (AVI file):

- Upon the activation of an event
- By manually selecting the movie from the selection list

A movie can be programmed to play upon the activation of an event. The movie automatically plays when the device event takes place. The device event response contains the coded information to make this happen. This must be set up by the programmer using System Builder.

To play a movie (AVI file) manually:

1. Click the Browse Image Files button.
2. Select the desired AVI file.
3. Click Open.
4. Use the buttons to Play, Stop, or Restart the movie.

Predefined layouts

There are four predefined layouts using the different displays. The default layout is the "4 Quadrant" layout. The other predefined layouts are: "Large Map" (3 windows), "View All Windows" (6 windows), and "Text Only." Custom layouts can be created and added to the list, and any of these layouts can be used by opening the layout.

Note: The predefined layouts cannot be deleted.

4 Quadrant layout

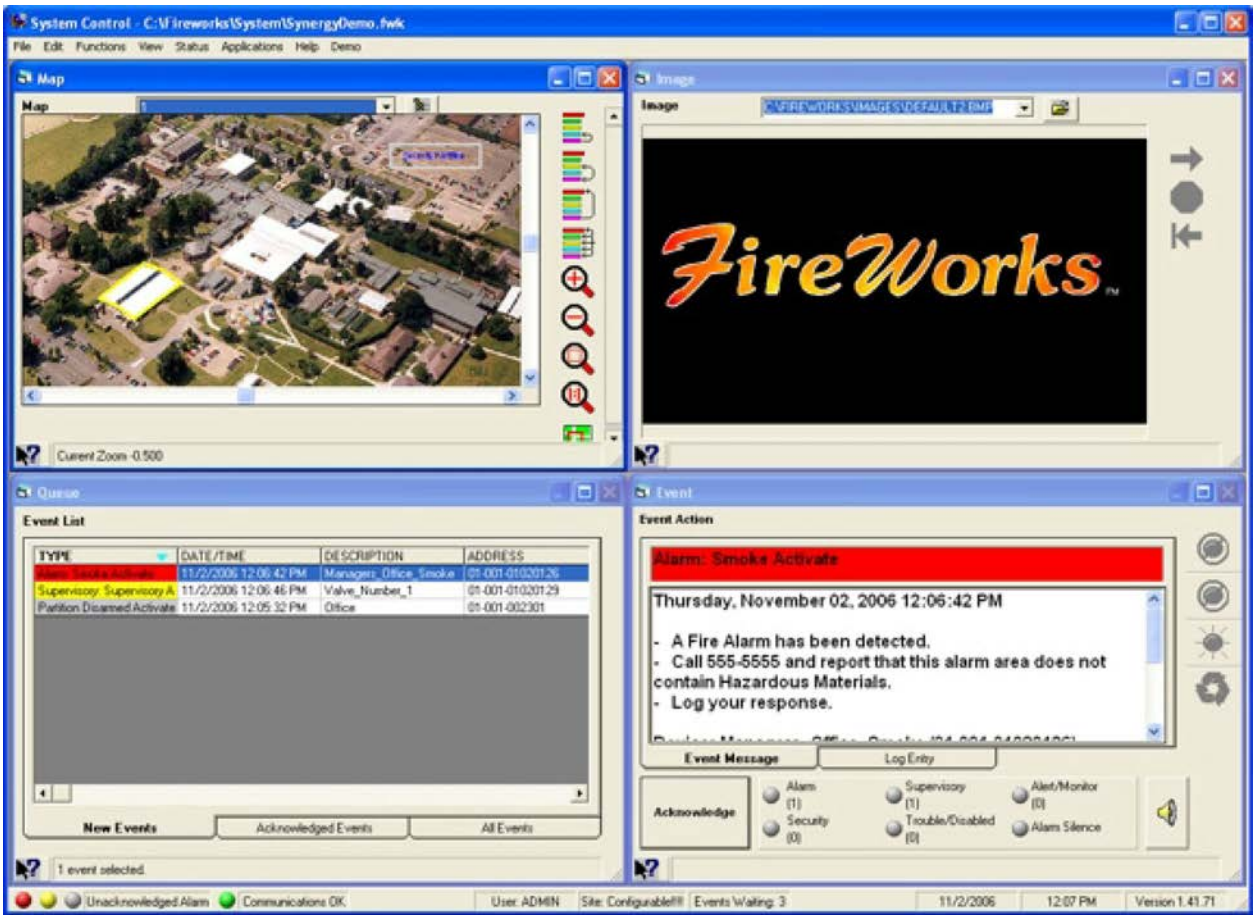

Large Map layout

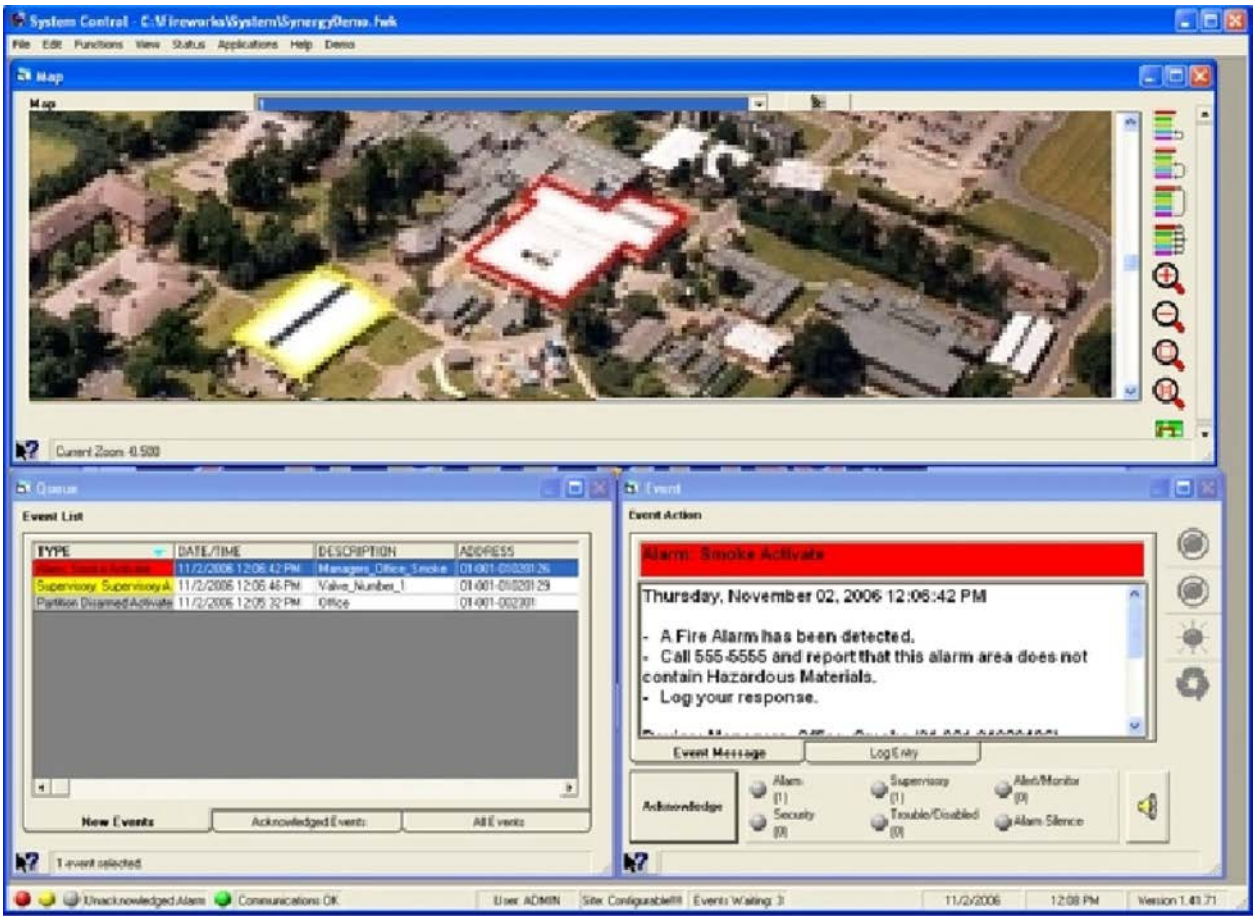

View All Windows layout

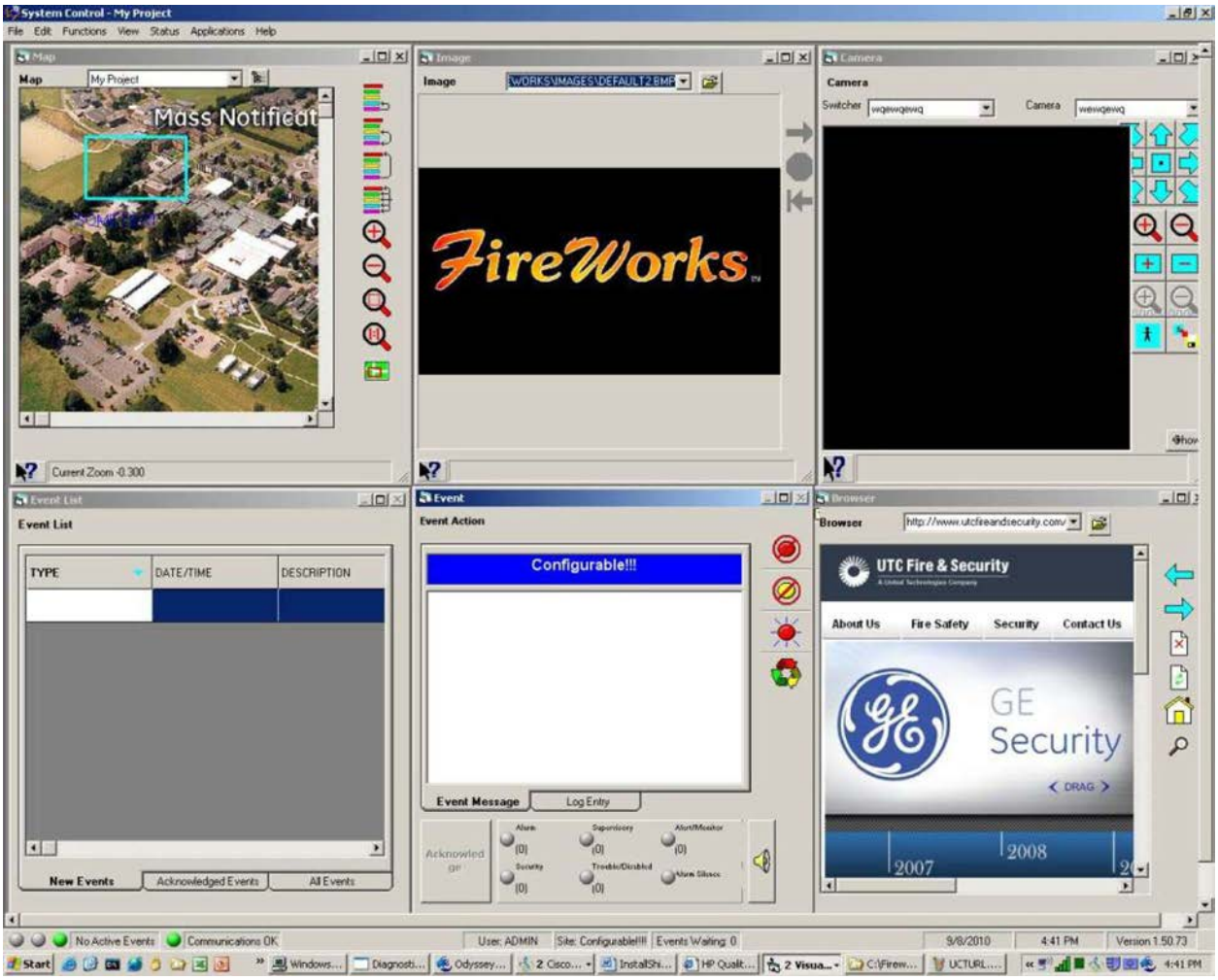

Text Only layout

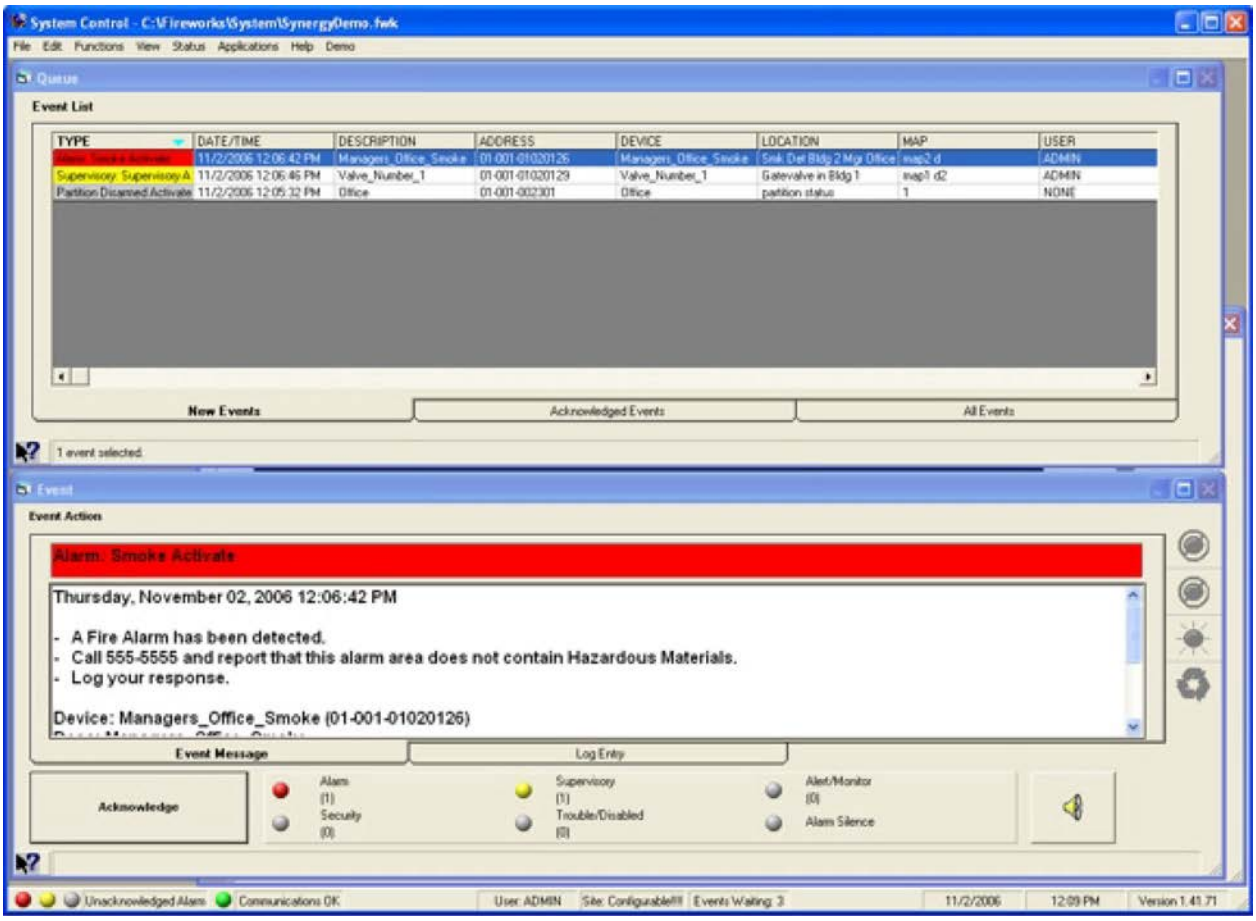

Print dialog

Use the Print dialog box to print information when paper documentation is needed for archiving or report generation.

Printer: Lists the printers in your system.

Print Map: Prints the map currently displayed.

Print Event Action: Prints the event that is selected in the Event Action display. This includes the event type, priority, location, date/time, description, and message.

Print Log Entry: Prints the log entry that is associated with the event displayed in the Event Action display.

Print Card Information Log Entry: Prints all of the card access log information that is associated with the event displayed in the Event Action display.

Print button: Prints the selected item.

Printer Setup button: Used to set up options for the printer you selected.

Cancel button: Cancels (removes) the information you are currently entering. It does not remove information that was already applied or added. Also closes the dialog box.

Printer Status dialog

Use the Printer Status dialog box to monitor the queue status of the PT1-P printer connected to your system. In printer status, you can start and/or stop printing or purge a printer queue. You may have a message printer and a report printer connected to your system. If so, each printer can be controlled individually. You must select the printer you want to monitor using the list.

Printers: The printers that are connected to the workstation.

Status: The current status of the printer.

Items on message queue: The items waiting to be printed on the "message" printer. **Note:** Your system may not include a message printer.

Items on report queue: The items waiting to be printed on the "report" printer. **Note:** Your system may not include a report printer.

Start printing button: Starts the printer if printing was stopped.

Stop printing button: Stops the printer from printing.

Purge printer button: Deletes all print jobs from the printer queue.

Cancel button: Cancels (removes) the information you are currently entering. It does not remove information that was already applied or added. Also closes the dialog box.

Printer status

The Printer Status dialog box is used to monitor the queue status of the PT1-P printer, start or stop printing, or purge a printer queue. You may have a message printer and a report printer connected to your system. If so, each printer can be controlled individually.

To monitor the printer status:

1. From the Status menu, click Printer Status.
2. From Printers, select the printer you want to monitor.
3. Monitor, start or stop printing, or purge the printer as necessary.
4. Click Cancel or Close to close the dialog box.

Printing a report

You may want to print reports to keep for future reference. The printed reports can be used to keep records of your system and viewed at a later date.

To print a report:

1. Run a report.

   The report is displayed in a Crystal Reports viewer.
2. Click the Print Report button on the tool bar.
3. Select the printer, print range, and number of copies.
4. Click OK.

Printing event information

Information can be printed when paper documentation is needed for archiving or report generation. You can print four information items:

- The map that is currently displayed
- The event that is selected in the Event Action display
- The log entry that is associated with an event
- The card information log entry that is associated with an event

Note: You must have a graphics printer connected to the workstation to print event information.

To print event information:

1. From the Functions menu, click Print Current Event/Map, or press F6.
2. Check the item that you want to print.
3. In the Printer field, select the desired printer.
4. Click Print.

Receiver event contact lookup and password authentication

Some events that are received from a receiver may have associated account contacts. These are individuals that must be notified that the event took place. Each of the contacts has a password that should be authenticated before event information is released to the individual for security purposes.

When an event comes into FireWorks from a receiver and has assigned contacts to display, the Contacts button is enabled when you select the event. The Contacts button displays the Contacts dialog box. Each individual contact is listed for the account along with the person's contact information. The contact's password field is used to enter the person's password and is then authenticated by clicking the Authenticate button. All successful authentications are stored in history.

Note: Authenticate the person's password before releasing any information about the system event.

To display and authenticate account contacts for a receiver event:

1. Select the receiver event in Event List.
2. Click the Contacts button in Event Action to display the Contacts dialog box.
3. Contact the individual listed in the Contacts dialog.
4. Ask for the person's account password.
5. Type the password in the "Enter contact password" field.
6. Click Authenticate.
7. If the password is authenticated, instruct the individual about the system event.
8. If there is more than one contact, repeat steps 3 through 7 for each person.
9. When finished, close the Contacts dialog box.

Report Application dialog

Use the Report Application dialog box to generate EST3 reports, EST2/ICRC3/FCC reports, History reports, and Diagnostic reports, and add or edit custom reports. Each category has a set of predefined reports, such as history reports and sensitivity reports. The reports are used to view event records that describe what has taken place in your system. All reports can be printed and saved. There are approximately 18 predefined reports provided, which cannot be changed.

The Report Application dialog box is also used to select the parameters (e.g. node parameters, filters, sorting) that you want to use for the type of report you are generating. You can also define a set of parameters for any report and save the report as a custom report, which can then be quickly accessed and run without having to redefine the parameters each time you run the report.

Reports are displayed in Crystal Reports Viewer, which is a third-party software application. You can create customized reports by purchasing Crystal Reports Standard or Crystal Reports Professional.

Categories: A list of the different report categories. A category is a collection of reports.

Show all custom reports: When checked, displays all of the custom reports that have been created no matter what category you have selected. When unchecked, custom reports are only displayed in the report category they were created in.

Standard reports tab: A list of the different reports that are available for the category that is selected, such as history and sensitivity reports. Reports are used to view event records that describe what has taken place in your system.

Custom reports tab: A list of custom reports that have been created.

Description: A description of the selected report.

Select parameters

- Node: The node for the report. A node is the communications line to a control panel network. This may be the line to one panel or the line to a network of panels. A panel is the control panel that is connected to the node. A partition is the list of partitions in your system. A line is a line number for the device's panel.

- Panel: The panel for the report.
- History: The current "active" history or any archived history files that have been created.
- Diagnostics: The current "active" diagnostics or any archived diagnostic files that have been created.

Report timeout (seconds): The timeout period before the report stops trying to run.

Set filters: A list of filters that can be applied to any report. Select a filter name, then select the filter method, then enter what you want to filter for. For example, message = alarm. Note: For EST3 reports, when entering panel, card, and device filters, enter only numbers in the field (no letters or other characters).

Set sorting: Defines how the report is sorted when displayed. Select sorting name, then select if you want it in descending order; leave blank for ascending.

Schedules button: Opens the Scheduled Reports dialog box, which is used to create a scheduled report.

Run Report button: Runs the report using the parameters, filters, and sorting method you selected.

Save button: Saves the report and its parameters, filters, and sorting method you selected in the Custom Reports tab.

Delete button: Deletes the selected custom report.

Close button: Closes the dialog box.

Report descriptions

Each category contains a collection of reports. Each report is described below.

EST3 Standard reports

Disabled report: A disabled report is a list of all devices connected to a control panel that have been disabled.

Panel history report: A panel history report is a list of all events and commands that have taken place on a control panel.

Partition report: A partition report is a list of the physical areas that a security system protects. The report also shows whether a partition is armed or disarmed. Note: You must have the right access level to view a partition report. Access levels are set in User Manager.

Revision report: A revision report is a list of all of the revision information for the hardware, firmware, project, microcode, and database in the system. All revision information is stored in memory on the 3-CPU.

Sensitivity report: A sensitivity report lists the Signature Series smoke detectors connected to a panel with their real-time sensitivity values. Sensitivity is the alarm threshold or calibration of the detector. The report displays the values of all points connected to a panel according to device type and value.

Status report: A status report is a list of all devices connected to a control panel that are in an off-normal state (i.e. alarm, trouble, security).

Trouble report: A trouble report is a list of all devices connected to a control panel that are in trouble.

Output status report: An output status report is a list of all active outputs, including LEDs, connected to a control panel.

EST2/FCC/IRC3 reports

Disabled lines report: A disabled lines report lists all of the lines that are currently disabled.

Disabled procedures report: A disabled procedures report lists all of the actions, sequences, and time controls that are disabled.

Disabled zone messages report: A disabled zone messages report lists all of the zones that have disabled messages.

Disabled zones report: A disabled zones report lists all of the zones that are disabled.

Panel status report: A panel status report lists the current state of each fire panel connected to the workstation.

Query smoke level report: The query smoke level report shows the current panel sensitivity level for the node you selected. The node either reports a normal sensitivity or an alternate sensitivity depending on what was set up in the data entry program for the control panel.

Active status report: An active status report lists all of the points (devices) connected to a node (fire network) that are in an off-normal state.

Analog sensitivity report: Each device (ionization or photoelectric smoke detector) connected to a node reports its real-time sensitivity value to its controller. Sensitivity is the alarm threshold or calibration of the detector. The sensitivity report displays the values of all points connected to a node according to device type and value.

History report

A history report is a detailed record of system activity.

Diagnostics report

A diagnostic report is a detailed record of FireWorks system activity.

Resetting the system

The Reset button returns a control panel (node) to normal if all of its devices have been restored.

Notes

- The Reset button does not affect disabled points or manually overridden functions.
- For all receiver nodes, all common controls, such as reset, silence, drill, etc. are disabled.

To reset the system:

1. Click the Reset button.
2. Select the node (panel) that you want to reset or click All.
3. Click Issue Command.

Running a report

Report Viewer can generate EST3 reports, EST2/ICRC3/FCC reports, History reports, and Diagnostic reports. Reports are used to view event records that describe what has taken place in your system.

To run a report:

1. From the Applications menu, click Report Application.

   The FireWorks Report Application dialog box is displayed.
2. Select the category that contains the report you want to run.
3. Select the available report.
4. Select the node for the report.
5. Select the panel for the report.
6. Enter the report timeout period, if needed.
7. Set the filters (optional).
8. Define how the report data will be sorted when it is displayed (optional).
9. Click Run Report.

   The report is displayed in a Crystal Reports viewer.

Scheduled Reports dialog

Use the Scheduled Reports dialog box to add a new scheduled report or update an existing scheduled report. Scheduled reports can run daily, weekly, or monthly and at any time during the day. Scheduling reports to run automatically takes away the need to manually run reports on a regular basis.

Once a report runs, it is saved in the C:\Fireworks\ScheduledReports folder.

Note: Only custom reports can be scheduled to run automatically.

Custom Report Name: A list of the custom reports that are scheduled to run.

Next Run Date: The next time the report will automatically run.

Custom Reports: The available custom reports that you can assigned to a schedule.

Disabled checkbox: Prevents the scheduled report from running.

Run Frequency: How often the scheduled report runs.

- Daily: The report runs at the selected time.
- Weekly: The report runs at the selected time and day of the week.
- Monthly: The report runs at the selected time and calendar date.

Time: The time and the day that the scheduled report runs.

- Time: The time in 12-hour format.
- Day of Week: The day of the week. This option is only available when Run Frequency is set for Daily. Example: Click Sunday to run the report every Sunday regardless of the calendar date.

- Day of week: The day of week. This option is only available when Run Frequency is set for Monthly. Example: Click 1 to run the report on the first day of every month regardless of the day of the week.

  Tip: Check the "Last day of month"check box to run the report at the end of the month regardless of the calendar date.

Export File Type: Saves the report as a portable document format (PDF) file or as a comma-separated values (CSV) file.

Update button: Updates (edits) a scheduled report when something is changed for that report (e.g. time is changed).

Add New button: Creates a new scheduled report using the custom report, run frequency, and time selected.

Delete button: Deletes the selected scheduled report from the Custom Report Name table.

Search by address

This is an example of searching by address.

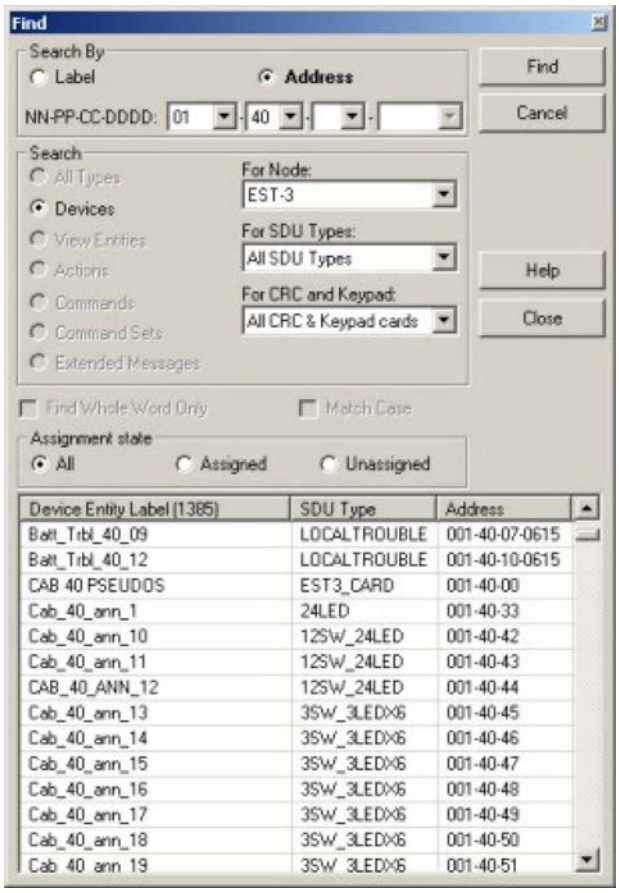

Search by address: Searches *only* the devices by device address for node 01 and panel 40.

Search: Only Devices are searched on an EST3 node
(NN = 01), with all SDU types, and all CRCs and Keypads. "For CRC and Keypad" is only displayed if the node contains CRCs or keypads.

Assignment state: "All" devices that meet the search criteria are displayed.

Search results: This is a list of the devices that were found based on the search criteria selected.

Search by label

This is an example of searching by label.

Search: All types, All nodes, and All SDU types. This means that every item, on every node, with any SDU type is displayed.

Assignment state: Assigned (only items that are assigned to a TSA, icon, map, etc. are displayed)

Icons: The colored icons next to the labels in the list represent how each item is assigned.

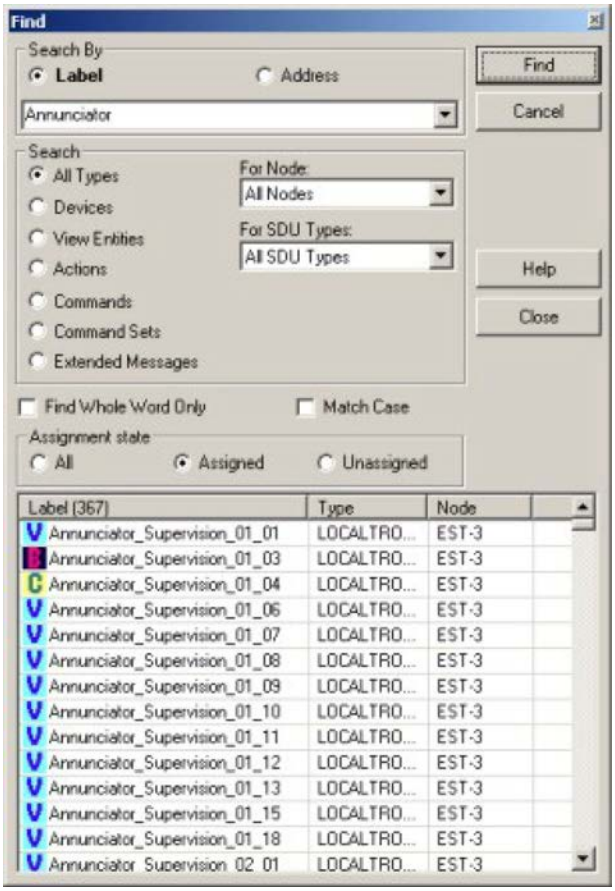

Search by label: Annunciator (only labels containing the word annunciator are displayed)

Search results: This is a list of the items that were found based on the search criteria selected.

Searching in a report

There may be a time when you need to find a word, number, or specific text in a report. Because reports can be very long, it may be hard to find exactly what you are looking for without searching for it. The search command searches the entire report for the word, number, or text you enter in the find field.

To search in a report:

1. Run a report.

   The report is displayed in a Crystal Reports viewer.

2. Click the Search Text button on the tool bar.

3. In Find What, type the word, number, or text you are searching for.
4. Click Find Next.
5. Continue clicking Find Next until you find what you are looking for.

Selecting a camera sequence

A camera sequence is a predefined pattern a camera follows. For instance, you may need a camera to sweep an entire room. By setting up a sequence, you can then click the Sequence button and the camera automatically sweeps the room. Without the sequence, you would manually have to use the pan and tilt buttons to move the camera. When a camera sequence is selected, it runs once and the camera returns to its normal position.

Each sequence is numbered. Each camera can have several sequences defined. Camera sequences must be defined at the switcher. The Sequence Run and Stop buttons allow you to select, start, and stop any preprogrammed camera sequence that was defined at the switcher. Once the camera sequence is selected, the camera begins the selected sequence.

There are two ways to select a camera sequence:

- Upon the activation of an event
- By manually selecting the sequence using the Sequence buttons (the camera must have appropriate settings)

A camera sequence can be programmed to activate upon the activation of an event. The predefined camera sequence automatically activates and displays video when the device event takes place. The device event response contains the coded information to make this happen. This must be set up by the programmer using System Builder.

To select a camera sequence manually:

1. Select a camera.

   Refer to Selecting a camera for more information.
2. Click Show if the camera setting and control buttons are not already displayed.
3. Under Sequence, type the sequence number.

   Valid sequence numbers are determined by your specific installation.
4. Click Run to start the sequence.
5. Click Stop to stop the sequence.
6. Click Hide to hide the camera setting and control buttons.

Selecting a camera

There are three ways to select a camera:

- Upon the activation of an event
- By manually selecting the camera from the selection list
- Using a Command TSA

A camera can be programmed to turn on upon the activation of an event. The camera activates automatically and displays video when the device event takes place. The device event response contains the coded information to make this happen. This must be set up by the programmer using System Builder.

Selecting a camera manually

To select a camera manually:

1. Click the camera selection list.
2. Select the camera that you want to see video from.
3. Use the toolbar buttons to control the camera.

   Refer to Button Definitions for more information.

Selecting a camera using a command TSA

To select a camera using a command TSA:

1. Locate the command TSA that controls the camera.

   Command TSAs are black in color.
2. Click the TSA.
3. Click Execute Command.

Selecting a switcher

There are two ways to select a switcher:

- Upon the activation of an event
- By manually selecting the switcher from the selection list

A switcher can be programmed to activate upon the activation of an event. The switcher activates automatically when the device event takes place. The device event response contains the coded information to make this happen. This must be set up by the programmer using System Builder (Action Browser)

To select a switcher manually:

1. Click the switcher selection list.
2. Select the switcher.

Selecting an event

To display information about an event, you must select. If the event is new, it may already be selected depending on its type and priority. If there are no unacknowledged events, the New Events tab is empty and events must be selected in the All Events tab. Once the event is selected, message and log information is displayed in Event Action, and Map Display updates to display the map/device/TSA that generated the event.

To select an event:

1. Click the tab that contains the event you want to display.
2. Locate the event.
3. Click the event.

Selecting preset camera positions

Presets allow you to select frequently used camera positions. Each preset is numbered. Each camera can have several defined presets. The preset buttons allow you to set and select any preprogrammed camera position. Once the camera position is selected, the camera moves into place.

There are two ways to select a preset camera position:

- Upon the activation of an event
- By manually setting and selecting the preset using the Preset buttons (the camera must have appropriate settings)

A preset camera position can be programmed to activate upon the activation of an event. The predefined camera position automatically activates and displays video when the device event takes place. The device event response contains the coded information to make this happen. This must be set up by the programmer using System Builder.

Setting a preset camera position manually

To set a preset camera position manually:

1. Click Show if the camera setting and control buttons are not already displayed.
2. Select a camera.

   Refer to Selecting a camera for more information.
3. Under Preset, type a preset number.
4. Pan and tilt the camera into the desired position.
5. Click Set.

Selecting a preset camera position manually

To select a preset camera position manually:

1. Select a camera.

   Refer to Selecting a camera for more information.

2. Under Preset, type the preset number.

   Valid preset numbers are determined by your specific installation and equipment.

3. Click Run.

   The camera moves to the position defined for that preset number.

Setting filters for a report

The filters allow you to filter a report based on certain criteria. This may be beneficial when you only want to view certain parts or select information of a report. Each of the report categories and individual reports have different filters available. Each of the filters have criteria and values that can be entered so that the exact information you are looking for is displayed in the report.

For example: If you are running a history report, you can filter the report with a certain date and time, state, event name, label, device description, or info/log. If you selected the date/time filter, you can then select whether the date is equal to, greater than, less than, etc. and type the date and time to start with. The report will then only display history based on the time/date filter information you specified.

To set filters for a report:

1. Select a filter by checking the check box next to the filter.

   Once the filter is selected, a second field is displayed.

2. Select the filter criteria (e.g. =, <, >, etc.) from the drop-down list.

   Once the criteria is selected, a third field is displayed.

3. Type the value you want to use with the criteria.

   For example, if you selected the state filter, you could type "alarm" as the state you are filtering for, meaning that all alarm state records would be displayed in your report.

   Note: For EST3 reports, when entering panel, card, and device filters, enter only numbers in the field (no letters or other characters).

4. Repeat steps 1 through 3 for each filter you want to use in the report.

Setting the camera's speed

The speed of the pan and tilt function can be controlled with the camera speed slider bar. The faster the setting, the faster the camera moves when the Pan and Tilt buttons are used.

To set the camera's speed:

1. Click Show if the camera setting and control buttons are not already displayed.
2. Use the Camera Speed slider bar to increase or decrease the camera speed.
3. Click Hide to hide the camera setting and control buttons.

Silencing an alarm

The Alarm Silence button silences the audible notification appliances connected to your system. When an event takes place (e.g. an alarm), the control panel activates the notification appliances (e.g. the horns) that are programmed to respond to the event. These devices continue to operate until silenced from the control panel or from System Control.

Depending on your system, you may have more than one node (control panel) connected to the workstation. If so, you need to review the event message to determine which node is reporting the alarm. The node causing the alarm is the node you want to alarm silence.

To silence an alarm:

1. Click the Alarm Silence button.
2. Select the node (panel) that you want to alarm silence or click All.
3. Click Issue Command.

Notes

- On EST2/FCC/IRC3 systems, if the FireWorks workstation issues an Alarm Silence command the Alarm Silence LED on both the EST2/FCC/IRC3 panel and on the FireWorks workstation turn on.
- On EST2/FCC/IRC3 systems, if the EST2/FCC/IRC3 system issues an Alarm Silence command the Alarm Silence LED only on the EST2/FCC/IRC3 panel turns on. FireWorks does *not* know that the EST2/FCC/IRC3 system is silenced.

  Subsequently, if the EST2/FCC/IRC3 system is reset, the EST2/FCC/IRC3 panel turns green, but FireWorks does not. The FireWorks alarm silence LED remains illuminated until either a reset is issued at the workstation or another alarm event occurs.
- For all receiver nodes, all common controls, such as reset, silence, drill, etc. are disabled.

Silencing the panel

Note: Only EST3 panels can be silenced.

For U.S. Local and Canadian Local systems, pressing the Panel Silence button turns the control panel's internal buzzer off. The Panel Silence LED on the control panel lights indicating the panel is in an off-normal condition and the panel has been placed in panel silence mode.

U.S. Proprietary and Canadian Proprietary systems cannot be panel silenced. The control panel buzzer only silences after all events have been acknowledged.

Notes

- The Panel Silence switch is disabled if only proprietary systems exist on your system.
- For all receiver nodes, all common controls, such as reset, silence, drill, etc. are disabled.

To silence a panel:

1. Click the Panel Silence button.
2. Select the node (panel) that you want to silence or click All.
3. Click Issue Command.

Silencing the workstation

The Silence Workstation button performs two functions at the workstation:

- Turns OFF the internal buzzer
- Turns ON or OFF an event associated audio (WAV) file

Note: Not all events have associated audio files.

When the button is clicked, both the internal buzzer and the WAV file are silenced. They turn back ON after a predefined time period and stay on until the event is acknowledged or the Silence Workstation button is clicked again. The time period is specified when the system is configured.

Once the event is acknowledged, the internal buzzer and WAV file automatically turn OFF. To turn the WAV file back ON, click the Silence Workstation button.

To silence a workstation and audio file:

1. Click the Silence Workstation button or click Silence Workstation on the Edit menu.
2. If needed, click the button again to reactivate the audio file and internal buzzer.

Sizing a window

Window displays can be sized just like any Microsoft application window. Window sizes do have a lower limit, meaning that they cannot be sized smaller than a certain size. Windows can also be maximized to fit your entire screen, or minimized to reduce them to a button on the task bar. You may need to size windows so that they fit on your screen along with other windows. The default pattern is four windows displayed on your screen. Windows can be arranged as you desire and then can be saved in that position, allowing you to quickly access and open that arrangement at any time.

To size a window:

1. Drag your mouse over one of the edges of the window or over one of the corners of the window.

   Your mouse should change into a double-headed arrow.
2. Click and drag the window to the desired size.

Use the Maximize and Minimize buttons to maximize or minimize the window.

Sizing columns

You can adjust the width of the columns on each of the tabs. This may be necessary when a block of information is too large for the size of the column.

To size a column:

1. Move the mouse over a dividing line of between column titles until the pointer turns into a double arrow.
2. Drag the boundary until the column is the width you want.

Sorting lists by column

You can rearrange the event list in each tab by sorting. When you sort a column, you arrange the events in a predefined sort sequence. Each column can be sorted based on its content. Columns are sorted in the following manner:

- Type column: Events are sorted by priority.
- Date/Time column: Events are sorted with the most recent event first and the oldest event last.
- Device column: Events are sorted with the highest priority event first and the lowest priority event last.
- Address column: Events are sorted alphabetically.
- Location column: Events are sorted alphabetically.
- Map column: Events are sorted alphabetically.
- User Column: Events are sorted alphabetically.

Note: The default sort sequence is by priority.

To sort a column:

1. Click the title of the column you want to sort by.

   An arrow is displayed pointing up or down, which indicates that the events are sorted in ascending or descending order.
2. Click the arrow to sort the column in ascending or descending order.

Sorting report data

Report data records can be sorted in ascending or descending order within any of the report columns. For example, for a history report, you can sort the Date/Time data column so that the records display from oldest to newest (ascending) or newest to oldest (descending). Because there might be more than one record with the same data in a column (e.g. same date and time), you can also sort the records with the same data in ascending or descending order using a different data column. For example, if you had ten records with the same date and time, you could sort just those records by selecting another report data column to sort by.

Note: The sorting feature allows you to sort the report data using every data column. However, generally you will use one or two data columns to sort by.

To sort report data:

1. Select a report data column from the drop-down box.
2. Check descending or leave blank for ascending order.

   Whichever data column you select first has the highest priority and controls how other report records are sorted if you select other data columns to sort by.
3. If needed, select another report data column from the drop-down box.
4. Check descending or leave blank for ascending order.
5. Repeat steps 3 and 4 if you need to sort the data records further.

Starting the Report application

The Report application is used to generate EST3 reports, EST2/ICRC3/FCC reports, History reports, and Diagnostic reports. The reports are used to view event records that describe what has taken place in your system. All reports can be printed and/or saved. Reports are created using Crystal Reports Designer, which is a third-party software application. There are approximately 18 predefined reports provided, which cannot be changed. You can create your own custom reports based on the predefined reports. You can also create customized reports by purchasing Crystal Reports Standard or Crystal Reports Professional. Any Crystal report can be added to the available reports list.

To start the Report application:

1. From the Applications menu, click Report Application.

   The FireWorks Report Application dialog box is displayed.
2. Run, edit, or delete a report as necessary.

   See the appropriate help topics in this section for more information.

Status bar information

The status bar at the bottom of the System Control window contains these fields: messages waiting, user, unit, date, time, version, and event. It also contains LEDs that indicate the state of the system. The status bar message changes as messages are acknowledged. When there are no messages to acknowledge, the status bar clears.

LEDs: Located on the left, indicate the status of the system:

- Green - Normal
- Red - Alarm event
- Yellow - Trouble, supervisory, monitor, or security event

Event: Indicates the type of event (alarm, trouble, supervisory, security, or monitor) that is taking place in the system.

Communications LED: Located to the right of the status LEDs. Indicates whether panel communications are up or down. The LED is split in half if you are using redundant communications, the left half of the LED is for the "primary" communications line and the right half is for the "secondary" communications line. (See System Builder's Help for more information on redundant communications.)

- Yellow - Communications failed
- Green - Communications okay

User: Indicates who is logged on to the unit (workstation).

Unit: Indicates the unit (workstation) that you are logged on to.

Events waiting: Counter that shows the number of events waiting to be acknowledged.

Disabled points: Counter that shows the number of points that are disabled on your EST2/IRC3/FCC system. EST3 systems do not report disabled points.

Date and time: Indicates the current date and time.

Version: Indicates the software version number.

Synchronizing the display of system startup events

Typically, there are two ways in which system startup events are displayed in FireWorks.

1. When Fireworks starts up after an EST3 system is already started and in a quiescent state.
2. When remote panels start up after FireWorks is already started and in a quiescent state.

The second method occurs when remote panels are either powered up after being completely powered down (i.e., a cold boot), restarting after a panel or network download (i.e., a warm boot), or restarting after a system-issued command (i.e., a soft reboot).

When FireWorks is started while EST3 is running or when an EST3 panel or network cold or warm boot occurs, all panel objects that have been programmed to start up in a disabled state are annunciated on the New Events tab as disabled events. **Note:** This occurs in FireWorks even though those devices may not be listed in any 'active' event queue on the panel's display.

Thus, the Trouble/Disabled LED (queue) in FireWorks appears to be out of sync with the Trouble queue in EST3. This is because devices that are programmed to start up in a disabled state are not considered as being event-driven. Therefore, EST3 does not post them in any active event queue. Instead, it illuminates the Disabled LED and lists those devices in a status queue that can be displayed from the front panel.

When the disabled devices are acknowledged in FireWorks, they are moved into the Acknowledged Events queue and remain there indefinitely. The FireWorks Trouble/Disabled LED annunciates with the number of disabled devices. These can be viewed by clicking on the LED.

For some projects, the number of disabled devices can be large. Thus, the Acknowledged Events queue may appear encumbered with many events that are generally considered to be nonessential. You can clear these events from the queue as described below.

To clear the startup disabled events from the Acknowledged Events queue:

1. Issue a Network Restart command (e.g. a soft reboot of the network) either through FireWorks System Commands or the EST3 front panel.

   When the EST3 Network soft reboots, FireWorks receives restoration events in the New Events tab for each device that was disabled on system startup. When the restoration events are acknowledged, they reconcile with the original disabled events and clear them from the Acknowledged Events tab. The FireWorks Trouble/Disabled and EST3 Trouble queues are now synchronized (provided there are no troubles pertaining to the FireWorks workstation itself that would otherwise never be posted in EST3).

Note: Even though the startup disabled events are removed from the Acknowledged Events tab, the devices retain an active disabled status in EST3. To display or print the status of those devices using FireWorks, use Report/History Viewer and issue a Disabled or Panel History report request using the EST3 Standard Reports tab.

System Commands dialog

Use the System Commands dialog box to issue any panel command from the FireWorks workstation. These include all activate, enable, disable, and reset commands, plus commands to adjust sensitivity (smoke level) settings.

Devices: An explorer view of all the units, nodes, panels, cards, and devices on your system.

Find button: Opens the Find dialog box, which is used to search the your desired information.

Command: A list of commands that can be executed for the panel, card, or device you selected.

Arguments: Only available for certain commands. These are additional command settings used to control the device output or priority.

Issue command button: Executes the selected command.

Command status button: Opens the Command Status dialog box. This allows you to view the status of the command.

Cancel button: Cancels (removes) the information you are currently entering. It does not remove information that was already applied or added. Also closes the dialog box.

System Control overview

Monitoring

System Control lets you monitor all the fire networks, card access systems, and CCTV systems in your facility. During operation, information is presented on maps and/or floor plans of the actual site, combined with relevant information in text form.

Map screens present important system information graphically. Starting with a map of the overall facility, you can branch down through increasing levels of detail until you reach maps or plans that show the individual fire detection, card access, or CCTV systems and their devices.

Controlling

System Control lets you control your fire networks, card access systems, and CCTV systems by acknowledging device events and issuing panel commands.

System Control response is customized for your location. See the system administrator for specific controls relevant to your system.

Reporting

System Control lets you generate history reports and system reports about the devices, fire alarm panels, card access systems, or CCTV systems at your site. The reports can be shown on screen, printed on a workstation printer, or both.

Status reports can also be generated about your system. Unit Node Line status, node points status, EST3 panel status, and watchdog card status can all be reviewed through System Control.

Configuration and setup

System Builder is used to define access privileges for all users. Access to any workstation feature, command, or control can be granted separately.

System Builder lets the system administrator design and lay out maps, controls, text files, and operating parameters that are unique to your facility.

Tab definitions

The Event List window has three tabs. Each of the tabs is used for processing, storing, and reviewing the events that take place in your system. The tabs are described below:

New Events tab: Displays all events that take place before they are acknowledged. Once they are acknowledged, they are removed from this list and added to the Acknowledged Events list.

Acknowledged Events tab: Displays all acknowledged events. A maximum of 500 events can be stored in this list. As more acknowledged events take place, the older acknowledged events are removed, but can be found in History.

Acknowledged security events remain on this tab until the partition is reset. They then move to the All Events tab.

All Events tab: Displays all of the events that have taken place, including acknowledged events. A maximum of 500 events can be stored in this list. As new events take place, the older events are removed, but can be found in History.

Tab definitions

The Event Action window provides tabs for reviewing event messages and logging information about an event. The tabs are described below.

Event Message tab: Displays message, device, location, and map information that corresponds to the selected event in Event List. The message information, created by the system programmer, may contain important procedural information about what to do during an alarm or other event. The Event Message display area can be customized with respect to the fields that are the displayed and the arrangement of the fields.

Log Entry tab: Used to log important information about an event. The log entry is stored with the event and can be reviewed or printed at a later date.

Card Information tab: Displays all of the card access information that is associated with the event that is selected in Event List. A picture of the cardholder is also displayed. If you do not have the ACDB/FireWorks interface installed, the Card information tab is not displayed.

Tour of the System Control window

When you start System Control, you see the default four-quadrant window display unless your system is configured differently. A typical arrangement of windows is shown below. Each window performs a set of functions through the use of a toolbar or menu bar. The window layout and look can be controlled using Layout Manager.

The menu bar appears along the top of the window with a variety of menu titles. Selecting a command from one of these menus either performs an action or displays a submenu or dialog box.

A status bar appears along the bottom of the window. The status bar provides a quick way to view the status of your system. For more information, see Status bar information.

System Control four-quadrant window layout

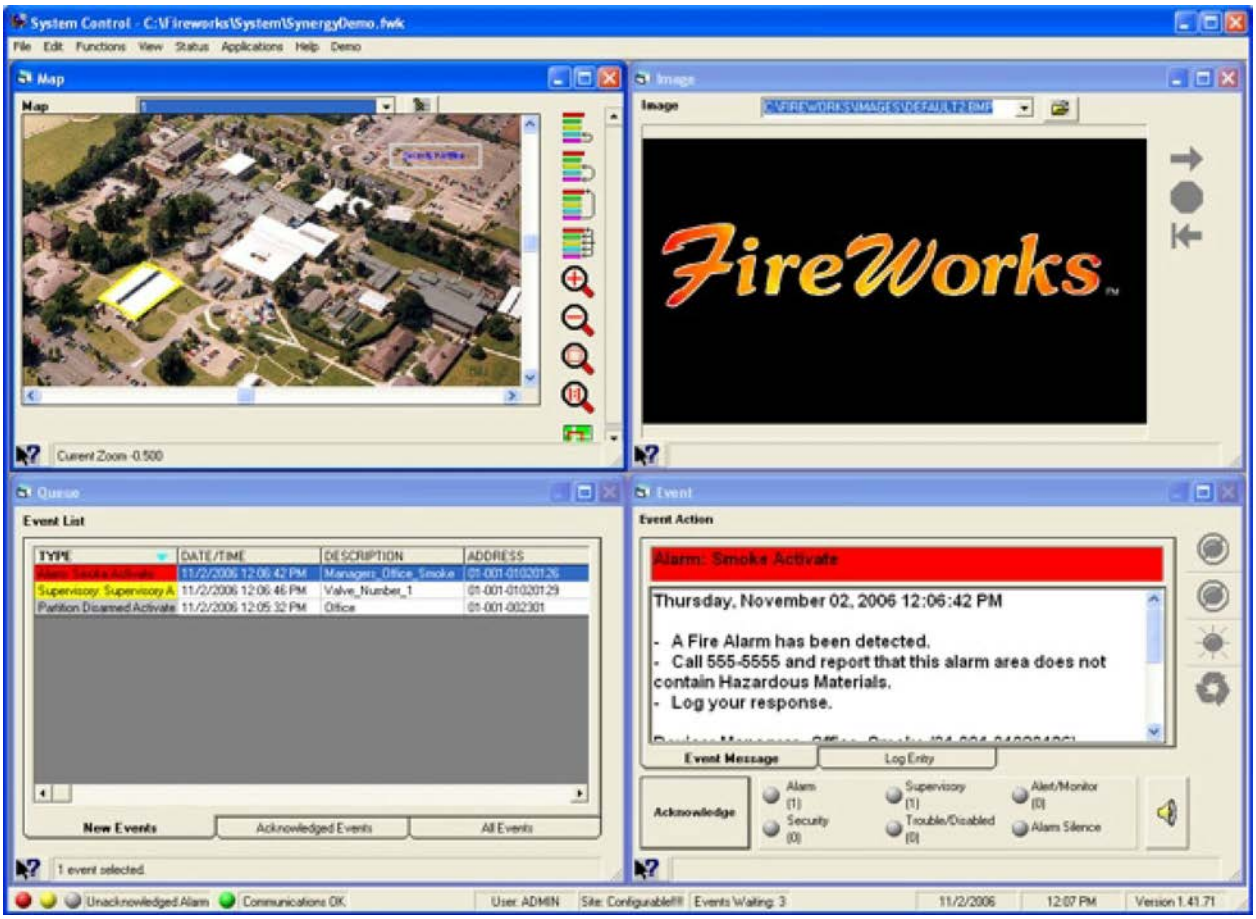

Note: This is the default layout. Your display and layout may be different depending on which window displays you are using and the layout you prefer.

TSA acknowledgment

A flashing TSA has an event waiting to be acknowledged.

When there is more than one active TSA, the additional TSAs do not flash, but their color reflects their real-time device status. These TSAs work their way to the top of the event queue (Event List) as events are acknowledged. When a TSA reaches the top of the event queue, its border flashes. You can then acknowledge the TSA.

TSA colors

TSAs have borders with different colors. Each of the colors shows what is taking place within the area the TSA surrounds. During system events, the border flashes and changes color depending on its type. A solid TSA indicates the status of the device it contains by the color of its border. A flashing TSA contains the current device event and requires acknowledgment.

TSA types, colors, and states

Type	Color	State
Device and Map	Blue	Normal (device)
	Cyan	Normal (map)
	Red	Alarm
	Yellow	Trouble, supervisory, monitor
	Green	Restore
	Grey	Disabled
	Orange	Security (alarms)
Command	Black	Normal (always black)
General	Brown	Normal (always brown)
Secondary map	Gold	Normal (always gold)

Notes

- EST2, IRC-3, and FCC security points are annunciated as Troubles (yellow).
- EST3 partitions (away, stay, away fail, stay fail, entry delay, exit delay) are yellow.

TSA overview

TSAs are touch sensitive areas used to branch through a map or areas on a map. TSAs are essentially buttons created, programmed, and applied by the FireWorks system administrator per the requirements of your facility. These appear in the map display area, not at the bottom of the screen. Clicking an active TSA causes the system to switch to a more detailed map, such as a device map. This process is called branching. The FireWorks system administrator has details on the use and function of your TSAs.

TSA types

There are five different types of TSAs.

Map TSA

A map TSA is used for annunciation. When flashing, a map TSA indicates that somewhere below the current map there is an active point. Click the TSA to branch to the next level map. To get to the device map displaying the active point, continue branching down through the map TSAs. To view information concerning the TSA, right-click the TSA.

Device TSA

A device TSA is defined as one or more devices. A device TSA is normally found on low level maps (e.g. smoke control, status map). If any of the devices in the group changes state, the device TSA border flashes. To view information concerning the TSA, right-click the TSA. Each of the devices in the TSA has its own information and can be viewed by clicking Devices on the shortcut menu.

Command TSA

A command TSA represents a command you can execute by clicking the TSA and then clicking Execute in the Commands dialog box. Command TSAs never flash, and have a solid black border. To view information concerning the TSA, right-click the TSA. Command TSAs are found on control maps.

Command TSAs may be found on any map throughout System Control. When executed, the associated preprogrammed commands are sent to the specified fire alarm networks. You can issue commands to any workstation and node in a FireWorks network. A command TSA can contain a group of devices.

General TSA

General TSAs are passive. They do not show device states or issue commands. General TSAs have a brown border. They are convenient way to have images on your maps. To view information concerning the TSA, right-click the TSA.

General TSAs are typically used to show the location of equipment that is not connected to a fire network. For example, you could use general TSAs to show the location of fire extinguishers or hazardous materials.

Secondary Map TSA

Secondary map TSAs are passive. They do not show device states or issue commands. They have a gold border and are used to link to a map that has already been linked to, such as a legend map.

User configuration dialog

Use the User Configuration dialog box to add users and define their properties. A user requires a user name, password, access group, and description.

There is one built-in user level, ADMIN, that cannot be changed.

Users: A list of all defined users including ADMIN. When you add a new user, it is displayed in the list.

User: The User ID is a 1 to 12 character word used to identify the user to the system.

Password: A coded word used to allow you access to the system. An asterisk (*) appears in place of each letter in your password. The default is "PASSWORD" and does not have to be changed.

Access group: A set of access rights. For example, the administrator group has access to all features and functions in FireWorks. Users are assigned to groups, which in turn control what access they have.

Timeout in minutes: If the user is inactive for this amount of time, FireWorks logs them out automatically.

Primary language: The primary language the user wants to use. This is the language used in FireWorks displays when the user logs on.

Alternate language: A second language the user may want to use. This language can be selected in System Control if the user wants to change to his second language.

Description: A brief description of the user or the user account.

New user button: Adds a new user account to the users list.

Delete user button: Deletes the selected user from the users list.

Apply button: Saves all of the changes you made without closing the dialog box.

User manager dialog

Use the User Manager dialog box to change a user's password, add or edit a user's properties, and add or edit access groups.

Configuring a user means assigning a user name and password, but it also means defining which privileges and access capabilities are available to that user. When you configure a user, you define how powerful the user is in FireWorks.

Change current user password button: Opens the Change Password dialog box.

User configuration button: Opens the User Manager Configuration dialog box.

Access group configuration: Opens the Access Group Management dialog box.

User privileges

FireWorks provides a basic set of templates with certain access privileges for the administrator, manager, and operator. The administrator can customize access privileges by creating new templates. The new templates must be based on the old templates, but access privileges can be added or subtracted for specific users. This way, you have specific templates designed for specific users.

The following table details the access privilege templates.

	User	Manager	Admin
Applications			
System Builder	-	-	X
User Manager	X	X	X

System Commands	-	X	X
Report/History Viewer	X	X	X
Icon Editor	-	-	X
Map Editor	-	-	X
Filtering configuration	-	-	X
Email configuration	-	-	X
Web client connection	-	-	X
System Control			
Exit system control	-	X	X
Acknowledge event	X	X	X
Hide TSAs	X	X	X
Print Event/log/map	X	X	X
Silence workstation	X	X	X
Make log entry	X	X	X
Execute common commands	X	X	X
Execute command TSA/Icons	X	X	X
Edit text (map, devices, ext msg.)	-	-	X
Execute device commands	-	X	X
Execute device reports	-	X	X
View maps	X	X	X
Select cameras	X	X	X
Use camera controls	X	X	X
Change language	X	X	X

ACDB configuration	-	-	X
Edit browser URL	-	-	X
Run layout manager	-	-	X
Allow window resizing	-	-	X
User Manager			
Change own password	X	X	X
Add new user	-	-	X
Delete existing user	-	-	X
Edit user attributes	-	-	X
Add new access group	-	-	X
Delete access group	-	-	X
Edit access group attributes	-	-	X
Make default group	-	-	X
System Commands			
Individual EST3 commands	-	X	X
Individual EST2/IRC-3/FCC commands	-	X	X
Reports			
Launch report application	-	-	X
Allow configuration of report application	-	-	X
Allow customization of reports	-	-	X

View partition information	-	-	X

Using the Find (search) function

The Find (search) function provides a way for you to quickly find objects (labels, TSAs, devices, commands, etc.). This is especially useful if your project contains hundreds of devices or if several people programmed the system.

The search capability of the find function is very powerful. Many different options and variations of search criteria can be selected. Search result lists are displayed based on the criteria you selected.

Note: For descriptions and details about the search criteria options, click the Help button on the Find dialog box.

Using the Find (search) function

To use the Find (search) function:

1. From the Edit menu, click Find or click the Find button on the toolbar.
2. Select the Search By criteria: Label or Address.
3. Type the label or select the address that you want to search for. Partial labels and addresses can be entered. The line address for IRC-3 panels is always 0.
4. Select the search object filters.
5. Select a specific node in which you want to search or select All Nodes.
6. Select a specific SDU type or select All SDU Types.
7. Check Find whole word only or Match case if desired.
8. Select the Assignment state.
9. Click Find.
10. All objects meeting your search criteria are displayed. Within the search results list:
11. Double-clicking a device takes you to the device in the device tree
12. Double-clicking a view entity takes you to the view entity in Map Browser
13. Right-clicking on the object shows what the object is assigned to. Click the "assigned to" object to display the "assigned to" list dialog box. You can then unassign the object or go to the object in Map Browser by clicking Details.
14. Assign objects to view entities by dragging and dropping objects in the search results list into Map Browser. See the step procedure below.

Assigning objects from the search results list

To assign objects from the search results list:

1. Locate the view entity in Map Browser that you want to assign the object to.

2. Select the objects in the search results list that you want to assign. Multi-select objects using the Shift key.
3. Press and hold the Alt key, then drag the selected objects onto the desired view entity.
4. Release the Alt key.

Search examples

Click one of the topics below for an example of searching by label or address.

Searching by label

Searching by address

Using the help manual

A full version of the help system is available in "manual" format. The manual is a PDF file that you can view and print using Adobe Acrobat Reader.

Adobe Acrobat Reader is included in this software package.

To open a manual:

1. Make sure you have Adobe Acrobat Reader installed on your computer.

   If not, insert the FireWorks CD and select Adobe Acrobat Reader. Follow the on screen instructions during installation.
2. Click the Start button.
3. Click Programs.
4. Click FireWorks.
5. Click SystemControl.PDF.

Using the online help system

Welcome to the FireWorks System Control User Support. This help system provides the information you need to accomplish tasks, understand concepts, and use the application.

Help for System Control is provided in three formats:

- Tool Tips - Provides the names of the toolbar buttons. Move your mouse over a button to display the name of the button.
- Help Button Help - Provides purpose or background information and field level information for a dialog box. Click the Help button in a dialog box to display dialog specific information.
- Help Window - Provides a table of contents, index, search, and favorites tabs. Help on the entire system can be accessed using the help window. Click through the table of contents to display various topics, or use the index or search tabs to find specific information.

Tips for using online help

- When viewing help, you can maximize the help window or resize it to suit your liking.
- Click the Hide or Show navigation buttons to view or hide the Contents, Index, and Search tabs.
- Click Back or Forward to step through the series of help topics you viewed in the current session.
- The Options menu item provides additional browse and navigation controls.
- Some topics include a Related Topics button at the end of the text that displays a popup menu of related topics that you can click and go to.
- Click the Print button to print the current topic.

Viewing a report that ran

After a scheduled report runs, a PDF file is created and placed in the C:\Fireworks\ScheduledReports directory. The report PDF file can be viewed and printed using Acrobat Reader.

To view a report:

1. Using Windows Explorer, navigate to the C:\Fireworks\ScheduledReports directory.
2. Locate the report file that you want to open.
3. Double-click the report file.

   The report is displayed in Acrobat Reader.
4. Print the report if needed.

Viewing an empty report template

You can view an empty report (no data) to see the format and layout of the report type.

To view an empty report:

1. From the Applications menu, click Report Application.

   The FireWorks Report Application dialog box is displayed.
2. Select a category.
3. Select an available report.
4. Right-click the report
5. Click View Report.

   The report form "template" is displayed containing no data.

Viewing icon information

Icon information can be viewed from Map Display by left- or right-clicking on the icon. The following information can be viewed:

- Label - A TSA name entered by the programmer
- Description - A textual description of the TSA entered by the programmer
- State - The highest priority event of the devices making up the TSA

To display icon information:

1. Locate the icon.
2. Right-click the icon.
3. View the icon information.

Viewing the status of a partition

The current partition status is indicated by a set of LEDs. Armed Stay (perimeter only), Armed Away (all armed), and Disarmed LEDs turn green if the state is active. These are considered normal states for a partition.

Exit Timer, Entry Timer, Failed Stay, Failed Away, and Trouble LEDs turn yellow if the state is active. These are considered off-normal states for a partition.

To view the status of a partition:

1. From the Applications menu, click Partition Commands.
2. Select the Node that the partition is assigned to.
3. Select the Partition.
4. Review the current status of the partition.
5. Click Update Status to update the current status of the partition.

Viewing TSA information

TSA information can be viewed from Map Display by right-clicking on the TSA. The following information can be viewed:

- Label - A TSA name entered by the programmer
- Description - A textual description of the TSA entered by the programmer
- State - The highest priority event of the devices making up the TSA

To display TSA information:

1. Locate the TSA.
2. Right-click the TSA.
3. View the TSA information.

Watchdog card status dialog

Use the Watchdog Card Status dialog box to monitor supervision points within the FireWorks computer. The supervision points are: internal fans, CPU, power supply, temperature, Form C relay contacts, and a hardwired trouble contact.

Card status: LEDs that indicate the status of the supervision points. (Green = Normal, Red = Off normal)

Temperature: Indicates the temperature inside the computer.

Voltage levels: Indicates the power supply voltage levels inside the computer.

Fan speeds: Indicates the speed of the fans inside the computer.

Watchdog Card status

The Watchdog Card Status dialog box allows you to monitor supervision points within the FireWorks computer. The internal supervision points are: internal fans, CPU, power supply, and temperature. An internal trouble buzzer and LEDs annunciate failure of the monitored points. The associated LED turns red when the supervision point fails and is green when it is normal.

When a monitored point fails, the event is sent to System Control and displayed in the Event List display. The event must be acknowledged just like any other event.

To monitor the watchdog card status:

1. From the Status menu, click Watchdog Card Status.
2. Monitor the supervision points.
3. Click Cancel to close the dialog box.

Notes (for computer models FW2, FW4, FW2UL2, FW4UL2, FW3UL3, and FW5UL3 only)

The trouble relay is configured with the de-energized position as the trouble condition. When FireWorks is powered up and there are no trouble conditions, the trouble relay is energized. User relays one and two are normally de-energized until commanded ON through FireWorks.

User relay two is a latching type relay that retains its ON state even if FireWorks is shut down or if the computer is turned off (including full discharge of the battery backup). The relay returns to its normal de-energized state either when commanded to do so via FireWorks or upon restart of FireWorks after it has been shut down.

Zooming a camera

Some cameras can be zoomed in and out. Zooming allows the focal length of the camera to be continuously adjusted, allowing for rapid change in the size of an image without loss of focus.

Note: Only one camera can be controlled at a time.

To zoom a camera:

1. Select a camera.

   Refer to Selecting a camera for more information.

2. Click the Zoom In and Out buttons to adjust the size of the image.

Zooming in and out

You may need to zoom on a map to get a better look at what is taking place. Clicking one of the zoom buttons allows you to enlarge, reduce, select, or display the actual size of a map. There are four buttons to choose from:

- Zoom In
- Zoom Out
- Zoom Select
- Zoom 1-to-1

To zoom on a map:

1. Select a map if it is not already displayed.

   Refer to Displaying maps for more information.

2. Click the desired zoom button.

   Refer to Button definitions for more information.

Index

A

access groups, 9, 26, 34, 45
ACDB, 28, 42
acknowledge, 8, 133
  events, 8
  TSA, 133
acknowledge button, 8, 10
acknowledge current event, 8
acknowledged events, 131
acknowledged events list, 99
actions, 46
activate command types, 50
active status, 37
admin, 136
alarm, 125
  silencing, 125
alarm silence, 82
alarm silence button, 125
all events, 21, 60, 99, 123, 131
all events tab, 10, 21
applications menu, 83
authentication, 113
automatic printing, 27
autoscan, 15
AVI, 102
AVI file, 107

B

banner title, 20
  changing, 20
basic system operation, 10
BMP, 102
branching, 11
  between maps, 11
browser display, 16, 41, 42, 104
buttons, 12, 13, 14, 15

C

camera, 44, 69, 101, 106, 121, 144
  focusing, 69
  selecting, 121
  sequence, 121
  switcher, 122
  tilting, 106
  zooming, 144
camera display, 15
  buttons, 15

opening, 97
camera iris, 29
camera speed, 124
camera speed button, 124
camera view, 102
card information, 42, 113
CCTV, 10, 15, 44, 101, 102, 123
control, 15
clear all receiver events, 21
colors, 80, 88, 134
column descriptions, 22
columns, 32, 127
sizing, 127
command icon, 67, 88
executing, 67
command status, 23, 83
command TSA, 67, 88, 135
executing, 67
commands, 50, 82, 83, 98
communications LED, 128
contacts, 113
contacts button, 13
CPU, 143
custom report, 29, 33, 45

D

data columns, 32
defined layouts, 33
descriptions, 47
device icon, 80, 81
device map button, 10, 60
devices, 35, 37, 41
diagnostic reports, 115
diagnostic status, 38
disable, 35, 37, 50, 82
disable command types, 50
display device map, 12, 44
display parent map, 12, 44
display site map, 12, 44
drill, 8
drill button, 8, 13
drill command, 8
activating, 8

E

edit menu, 79, 126
editing, 45, 47
labels, 47
email, 46
enable, 35, 37, 50, 82
enable command types, 50
EST2/FCC/IRC3 reports, 115

EST3 command types, 50
EST3 reports, 115
event action display, 8, 10, 31, 41, 43, 48, 60, 88, 100, 113, 123, 132
    buttons, 13
    opening, 97
    use, 100
event action log entry, 43
event colors, 57
event data, 31, 32
event list display, 8, 10, 21, 32, 43, 48, 60, 61, 99, 129, 131, 133
    opening, 97
    use, 99
event message, 43, 48, 59, 100, 113
    displaying, 43
event message tab, 31
event operation for, 60
events, 8, 21, 27, 113, 123
    acknowledging, 8
    printing, 113
    selecting, 123
    types of, 61
executing commands, 67
exiting, 68
    system control, 68
extended message editor, 48
extended messages, 48
    entering/editing, 48

F

F1, 8, 85
F10, 85
F11, 85
F12, 85, 126
F2, 85, 96
F3, 23, 85
F4, 79, 85
F5, 44, 85
F6, 85, 113
F7, 44, 85
F8, 85, 87
F9, 12, 44, 85
filters, 124
find, 139
focusing, 69
    camera, 69
font, 20
form C, 143

G

general TSA, 134, 135

H

help, 140
hide inactive TSAs, 79
history file, 10
history reports, 115
history viewer, 43
home, 16
HTML, 42

I

icons, 80, 81
image, 40
image display, 14, 102
    buttons, 14
    opening, 97
IRC-3/FCC/EST2 command types, 82

J

JPEG, 40, 102

K

keyboard shortcuts, 85

L

labels, 47
    editing, 47
language, 21
layout manager, 9, 33, 97, 105, 107
LED definitions, 86
LEDs, 86, 96
    activate, 50
    disable, 50
    enable, 50
    restore, 50
log entry, 8, 43, 88, 100, 113
    displaying, 43
    making, 88
logging, 87
    off, 87
    on, 87
logon/logoff, 87

M

map display, 8, 10, 12, 44, 48, 60, 98, 142
    buttons, 12
    opening, 97
map display terminology, 88
map TSA, 88, 135
maps, 44, 113
    displaying, 44

menu bar, 91
messages, 43, 48, 113
messages waiting, 128
movie, 107
    playing, 107

N

navigating, 94
new events, 10, 60, 99, 123, 131
node status, 96

O

opening, 97
    quadrant display, 97

P

panel silence, 125
panel silence button, 13, 125
panel silence led, 125
partition, 30, 83, 142
    command, 83, 104
    reset, 83
    status, 142
password, 20, 25
password authentication, 113
picture, 40
    displaying, 40
predefined layouts, 107
preset camera positions, 123
    selecting, 123
printing, 112, 113

Q

quadrant display, 97
    opening, 97

R

receiver events, 21, 113
related topics button, 140
report application, 29, 30, 33, 34, 40, 45, 113, 115, 117, 120, 124, 127, 128, 141
report filters, 124
report printing, 113
report template, 141
reports, 29, 30, 33, 34, 40, 45, 113, 115, 117, 120, 124, 127, 128, 141
reset button, 13, 116
resetting, 116
    partition, 83
    system, 116
restart, 107
restoral, 60

restore command types, 50, 82

S

scheduled report, 30, 34
scheduled reports, 40, 45, 141
screen layout, 31, 107, 126
search, 16, 118, 119, 120, 139, 140
security events, 60, 83, 86
sensitivity, 35, 37
sequence, 121
silence workstation button, 13, 126
silencing, 125, 126
    alarm, 125
    panel, 125
    workstation, 126
smoke level, 82
sorting, 127
    lists, 127
sorting report data, 127
status, 23, 38, 96, 112, 142, 143
    command, 23
    diagnostic, 38
    node, 96
    partition, 142
    printer, 112
    watchdog card, 143
status bar, 10, 128
status report, 30
stop, 107
switcher, 122
system, 82, 116
    operation, 10
    resetting, 116
system commands, 50, 83, 101
    issuing, 83
system control, 68, 84, 132, 140
    exiting, 68
    features, 84
    help browser, 140
system control overview, 130
system messages, 38

T

technical support, 28
time controls, 82
touch sensitive areas, 133, 134, 135, 142
TSA colors, 134
TSA information, 142
TSA overview, 134
TSA types, 135
TSAs, 8, 10, 11, 35, 60, 67, 79, 84, 88, 133, 134, 135, 142
    acknowledge, 133

clicking, 11
color, 88, 134
flashing, 133, 134
hiding/showing, 79
right-clicking, 142
types, 88, 135
use, 84
viewing, 142

U

user group, 31, 32
user ID, 87
user manager, 25, 26, 34, 45, 47, 103, 136
user privileges, 136

W

watchdog card status, 143
WAV file, 126
web client, 9
website, 41
window sizing, 31, 126
workstation, 126
silencing, 126

Z

zone icon, 37
zone TSA, 35, 88, 135
zoom 1-to-1, 144
zooming, 144
camera, 144
in, 144
out, 144

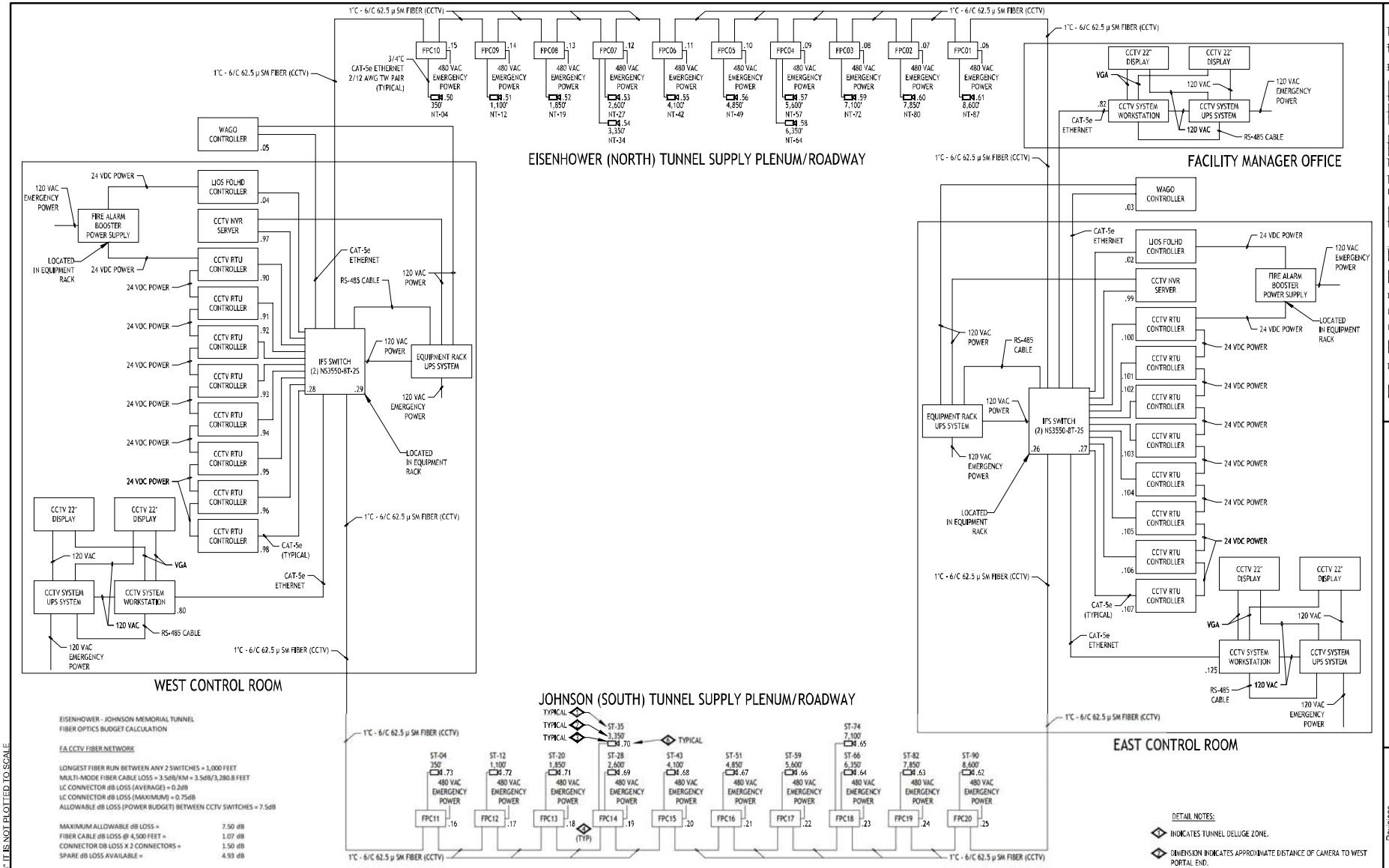

BARNARD EJMT TEAM

RONDINELLI · BARNARD · ALP · Turner-Austin · Western States Fire Protection Co. · BCER Engineering · Sturgeon Electric

EISENHOWER/JOHNSON MEMORIAL TUNNEL
FIXED FIRE SUPPRESSION SYSTEM
DESIGN BUILD PROJECT
Project No. C0703-360 Subaccount 17810
RECORD DRAWINGS - 2015-11-16

Revisions				
Num	Description	Date	DRAWN BY	CHECKED BY
			B.T.L.	A.E.E.JR

FIRE ALARM: ONE LINE DIAGRAM CCTV

Drawing Number

FA3.02

IF THIS SHEET IS NOT 22"x34" IT IS NOT PLOTTED TO SCALE

Keyboard Commands

AVIGILON
THE BEST EVIDENCE™

Switch to live View — Ctrl + L

Switch to recorded View — Ctrl + P

Select View layout — Alt + 1 2 3 4 5 6 7 8 9 0

Select camera/ add camera to View — / + logical ID + Enter

Choose image panel — * + image panel# + Enter

Next image panel — Tab

Previous image panel — Shift + Tab

Clear image panel — Backspace

Toggle PTZ — Ctrl + D

Zoom in — +

Zoom out — -

Pan — ↑ ← → ↓

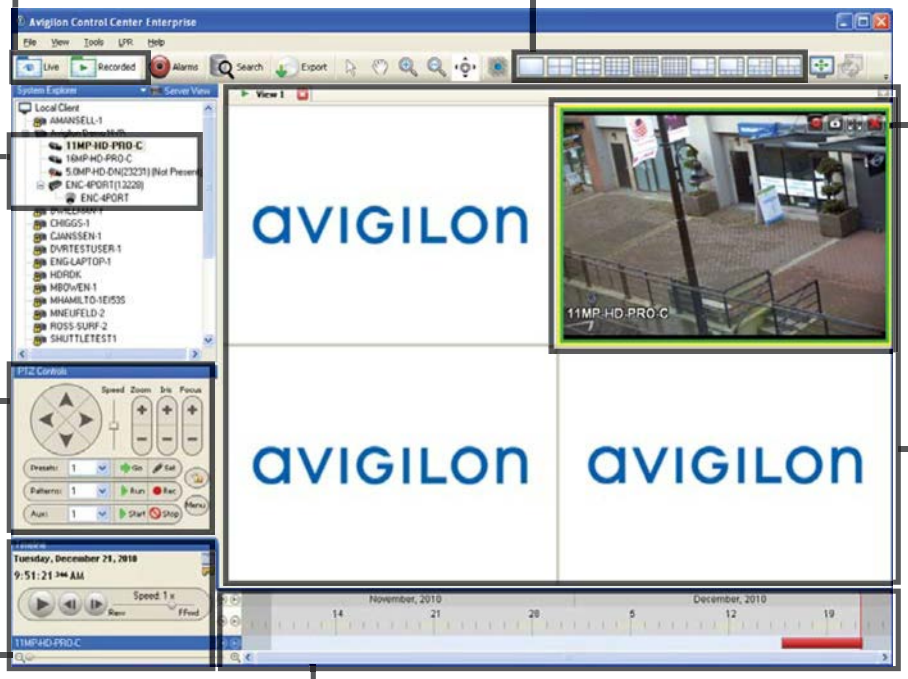

New View — Ctrl + T

Next View — Ctrl + Tab

Previous View — Ctrl + Shift + Tab

Close current View — Ctrl + W

Full screen — F11

Remove all cameras/ Clear screen — Ctrl + Backspace

Play/pause — Spacebar

Forward 5 seconds — Ctrl + Shift + →

Forward 1 second — Ctrl + →

Forward 1 frame — Shift + →

Increase playback speed — Page Up

Decrease playback speed — Page Down

Zoom in Timeline — Ctrl + Alt + +

Zoom out Timeline — Ctrl + Alt + -

Go to start of Timeline — Ctrl + Alt + Home

Center on Timeline marker — Ctrl + C

Scroll forward on Timeline — Ctrl + Alt + →

Go to end of Timeline — Ctrl + Alt + End

This Page Left Intentionally Blank

Avigilon Control Center Client User Guide

Version: 4.6 Enterprise

OLH-CLIENT-E-B-Rev2

Copyright © 2010 Avigilon. All rights reserved.

The information presented is subject to change without notice.

No copying, distribution, publication, modification, or incorporation of this document, in whole or part, is permitted without the express written permission of Avigilon. In the event of any permitted copying, distribution, publication, modification, or incorporation of this document, no changes in or deletion of author attribution, trademark legend, or copyright notice shall be made. No part of this document may be reproduced, stored in a retrieval system, published, used for commercial exploitation, or transmitted, in any form by any means, electronic, mechanical, photocopying, recording, or otherwise, without the express written permission of Avigilon.

Avigilon
Tel +1.604.629.5182
Fax +1.604.629.5183
http://www.avigilon.com

Revised 2010-11-22

Table of Contents

Introduction **1**

What is the Avigilon Control Center Client? 1

System Requirements 1

For More Information 2

Avigilon University 2

Support 2

Upgrades 3

Feedback 3

Getting Started **5**

Starting and Shutting Down the Avigilon Control Center Client 5

Starting the Control Center Client 5

Shutting down the Control Center Client 6

Locating Servers 6

Discovering and Managing Server Connections 6

Logging Into and Out of Servers 7

Logging In 8

Logging Out 9

Navigating the Application 9

Viewing Live and Recorded Video 11

Setup **13**

Connect/Disconnect Cameras 13

Discovering a Camera 14

Connecting a Camera to a Server 15
Editing the Camera Connection to the Server 17
Disconnecting a Camera from a Server 17
Server Setup 18
Accessing the Server Setup 18
General 19
Schedule 20
Recording and Bandwidth 22
Users and Groups 23
Alarms 31
Scheduled Backup 35
POS Transactions 37
Email Notification 45
Rules 48
System Log 53
License Plate Recognition 54
Camera Setup 58
Accessing the Camera Setup 58
General 59
Network 61
Image and Display 62
Compression and Image Rate 66
Image Dimensions 68
Motion Detection 69
Privacy Zones 71
Manual Recording 72
Digital Inputs and Outputs 73
Microphone 76

Client Setup 78
Accessing the Client Setup 78
General 79
Joystick 80
Exporting Settings 82
Import Settings 83
Site View 85
What is Site View? 85
Accessing Site View 85
Adding a Site 86
Editing and Deleting a Site 87
Views 89
What are Views? 89
Adding and Removing a View 89
Adding a New View to the Application Window 89
Adding a View to a New Window 89
Closing a View from the Application Window 90
Closing a Window 90
Selecting a Layout for a View 90
Making a View Full Screen 90
Making a View Full Screen 91
Ending Full Screen 91
Cycling Through Views 91
Saving a View 91
Saving a View 91
Opening a saved View 92
Renaming a saved View 92
Deleting a saved View 92

Maps **93**
Using a Map 93
Adding a Map 95
Editing and Deleting a Map 96
Editing a Map 97
Deleting a Map 97
Web Pages **99**
Using a Web Page 99
Adding a Web Page 99
Editing and Deleting a Web Page 100
Editing a Web Page 100
Deleting a Web Page 100
Video **101**
Viewing Live Video 101
Adding and Removing Cameras in a View 101
Displaying Live Video 102
Zooming and Panning a Video 102
Controlling PTZ Cameras 103
Listening to Audio in a View 106
Triggering Manual Recording 106
Triggering Digital Output 107
Viewing Recorded Video 107
Adding and Removing Cameras in a View 107
Displaying Recorded Video 108
Zooming and Panning a Video 108
Listening to Audio in a View 109
Playing Back Recorded Video 110
Bookmarking Recorded Video 112

Adjusting Video Display in Image Panels 114
Maximizing an Image Panel 114
Displaying Video Overlays 115
Changing the Display Quality 116
Changing the Image Panel Display Settings 117
Viewing Analog Video in Deinterlaced Mode 118
Alarms 119
Accessing the Alarms Tab 119
Reviewing Alarms 121
Viewing Alarm Video 121
Assigning an Alarm 122
Acknowledging an Alarm 122
Searching Alarms 122
Exporting Alarms 122
Purging an Alarm 123
Arming Image Panels 123
License Plates 125
License Plate Overlay 125
License Plate Recognition Watch List 125
Reviewing the License Plate Matches 126
Search 127
Performing an Event Search 128
Viewing Event Search Results 129
Performing a Pixel Search 129
Viewing Pixel Search Results 131
Performing a Thumbnail Search 131
Viewing Thumbnail Search Results 132
Performing an Alarm Search 133

Viewing Alarm Search Results 134
Performing a POS Transaction Search 135
Viewing POS Transaction Search Results 136
Performing a License Plate Search 136
Viewing LPR Search Results 137
Export 139
Saving a Snapshot of an Image 139
Exporting Live Images 142
Exporting Recorded Video and Images 144
Accessing the Export Tab 144
Exporting Native Video 144
Exporting AVI Video 146
Exporting PNG, JPEG or TIFF Images 148
Exporting PDF and Print Images 150
Exporting WAV Audio 152
Backup 155
Backing Up Recorded Video On Demand 155
Appendix 157
Accessing the Web Client 157
Reporting Bugs 158
Keyboard Commands 159
Image Panel & Camera Commands 159
View Commands 160
Playback Commands 161
Layout Commands 163
PTZ Commands (Digital and Mechanical) 164
Index 167

Introduction

What is the Avigilon Control Center Client?

The Avigilon Control Center Client is the application that works with the Avigilon Control Center Server software to give you access and control of the Avigilon High Definition Surveillance System.

The Client software allows you to view live and recorded video, monitor alarms and events, and control user access to the Avigilon Control Center System. The Client software also gives you the ability to configure the server, cameras and other external devices that are part of your surveillance system.

The Client software can run on the same computer as the Server software, or run on a remote computer that connects with the Server software through a local area network (LAN) or a wireless area network (WAN).

The Client software features available to you are dependant on the Server software edition. There are two editions of the Server software available: Standard and Enterprise. The Standard edition allows you to monitor video but not alarms, and contains all the essential Client features. The Enterprise edition gives you access to the full suite of Client software features, including alarms, rules, Site View, Web Pages, Maps and system backup. Visit the Avigilon website for an overview of the features available in each edition: http://avigilon.com/products/controlcenter/overview/

A copy of the Client software can be downloaded from the Avigilon website, or installed with the Server software.

System Requirements

A copy of the Client software can be downloaded from the Avigilon website, or installed with the Server software.

You do not need a license to use the Client software, but the features available in the Client software are dependant on the Server software license.

Minimum requirements	Recommended requirements

Monitor resolution	1280 x 1024	1280 x 1024
OS	Windows XP with Service Pack (SP) 2 or later, Windows Vista, or Windows 7	Windows XP with Service Pack (SP) 2 or later, Windows Vista, or Windows 7
CPU	Intel Single Core 2.4 GHz processor	Intel Dual Core 2.0 GHz processor
System RAM	1 GB	2 GB
Video card	PCI Express, DirectX 9.0c compliant with 128 MB RAM (Intel GMA 900 or better, NVIDIA 6600 or better, ATI X1300 or better)	PCI Express, DirectX 10.0 compliant with 256 MB RAM (NVIDIA GeForce 8000 series or better)
Network card	100 Mbps	1 Gbps
Hard disk space	500 MB	500 MB

For More Information

Visit Avigilon at http://www.avigilon.com/ for additional product documentation.

Avigilon University

The Avigilon University provides free online training videos that demonstrate how to set up and use the Avigilon Surveillance System. Register online at the Avigilon Partner site to begin: http://avigilon.com/partners/

Support

For additional support information, visit http://www.avigilon.com/support/.

Regular Avigilon Customer Support Center hours of operation are from 6:00 a.m. to 6:00 p.m. Pacific Standard Time (PST) and can be reached by calling the toll-free number: +1.888.281.5182.

E-mails can be sent to: support@avigilon.com.

For emergency technical support 24 hours a day, 7 days a week, please call the Avigilon Emergency Technical Support Hotline at +1.604.506.3117.

Upgrades

Software and firmware upgrades will be made available for download as they become available. Check http://www.avigilon.com/support/software for available upgrades.

Feedback

We value your feedback. Visit our feedback page to comment on our products and services: http://avigilon.com/feedback/

Getting Started

Once the Avigilon Control Center Client software has been installed, you can start using the Avigilon High Definition Surveillance System immediately. Refer to any of the following procedures to help you get started.

To watch a video overview of the application, see *Module 1 - Introduction to Avigilon Control Center Client and Viewing Live Video* in the Avigilon University - End User Stream.

Starting and Shutting Down the Avigilon Control Center Client

The Avigilon Control Center Client software can be started or shut down at anytime. The Avigilon Control Center Server software is a Windows service and will continue to run in the background even when the Client software is shut down.

Starting the Control Center Client

Perform one of the following:

- From the Windows Start menu, select **All Programs > Avigilon > Avigilon Control Center Client > Avigilon Control Center Client**.
- Double-click the **Avigilon Control Center Client** shortcut icon on the desktop.
- From the Avigilon Control Center Admin Tool, click **Launch Control Center Client**. See the *Avigilon Control Center Server User Guide* for more information.

Log in to the appropriate server when the Log In dialog box appears. See Logging In for more information.

Shutting down the Control Center Client

1. In the Avigilon Control Center Client software, select **File > Exit**.
2. In the confirmation dialog box, click **Yes**.

Locating Servers

The Avigilon Control Center Client software must communicate with the Avigilon Control Center Server software to access and configure your surveillance system. If the server is on the same network segment (subnet) as the computer running the Client software, the server will be automatically discovered by the Client software and will appear in the System Explorer on the left side of the application window.

If the server is on a different subnet, the server must be manually discovered. There is no limit to the number of servers that could be discovered by the Client software.

Discovering and Managing Server Connections

1. Open the Find Server dialog box.
    - In the Log In dialog box, click **Find Server...**.
    - In the application window, select **File > Manage Server Connections**. In the Manage Servers dialog box, click **Find Server...**

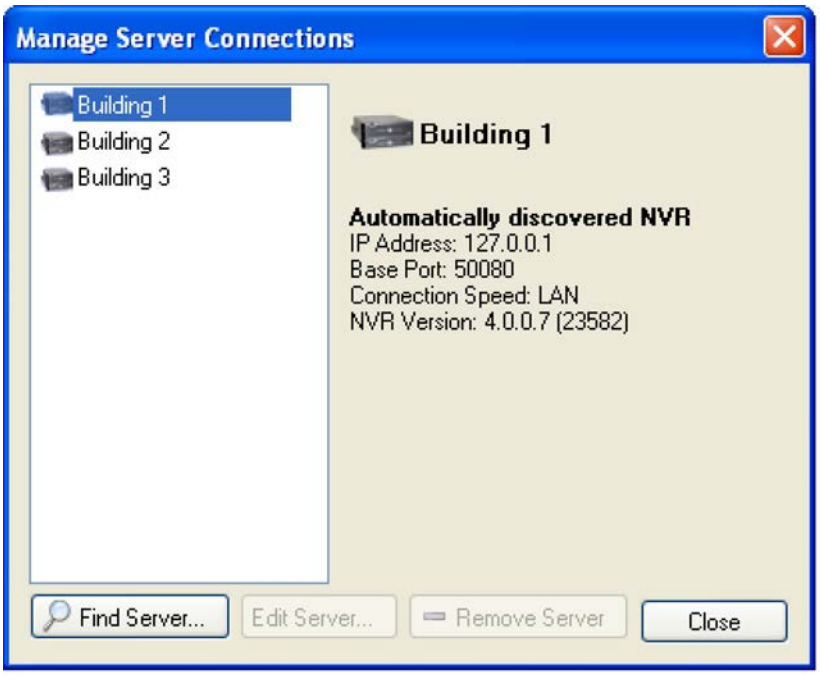

Figure A. Manage Server Connections dialog box

2. In the Find Server dialog box, enter the **Hostname/IP Address**, the **Base Port**, and the **Connection Speed** of the server you want to discover.

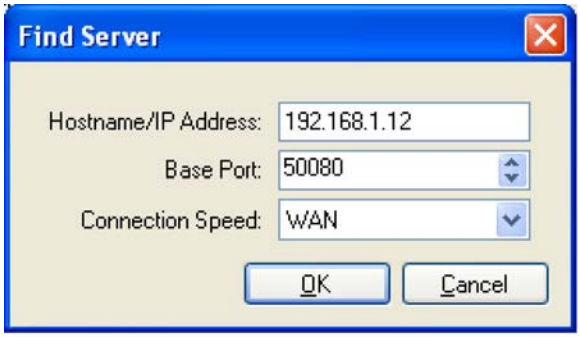

Figure B. Find Server dialog box

The base port is 50080 by default. You can change the base port number in the Avigilon Control Center Admin Tool. See the *Avigilon Control Center Server User Guide* for more information.

> **Tip:** Set the **Connection Speed** to WAN if you are on a low bandwidth network (i.e. internet or wireless network), and select LAN if you are on a high bandwidth connection (i.e. office or home network). This enables the Avigilon Control Center to better manage your bandwidth and image rate.

3. Click **OK.**

If the server is found, the server will appear in the Manage Server Connections dialog box.

If the server is not found, ensure the network settings are configured correctly, the firewall is not blocking the application, and the Avigilon Control Center Server software is running on the server, then try again.

Logging Into and Out of Servers

To access your Avigilon High Definition Surveillance System through the Client software, you must log in to the servers running the Avigilon Control Center Server software. Whenever the Client software detects a server with the Server software installed, you are prompted to log in.

The default administrator access uses *administrator* as the username and no password. To maintain the security of the administrator account, it is recommended that your system administrator immediately create a password for this account after the first login. Your system administrator can then create user accounts for other users.

If the Client software does not detect any servers, click **Find Server...** and enter the server IP address in the dialog box. See Locating Servers for more information.

Logging In

Be aware that the number of servers you can log into at one time is determined by the type of server you can access. Standard edition servers only allow you to be logged into three servers simultaneously, while Enterprise edition servers allow you to be logged into an unlimited number of servers.

Note: You cannot access Standard edition servers and Enterprise edition servers at the same time.

1. Open the Log In dialog box. The Log In dialog box automatically appears when a server is detected by the Client software.

   To manually access the Log In dialog box, perform one of the following:

   - From the **File** menu, select **Log In** to log in to all available servers
   - In the System Explorer, right-click a server and select **Log In**.

2. In the Log In dialog box, select a specific server or select **All Servers** from the **Log in to** drop down list.

Figure A. Log In dialog box

   Tip: If you accessed the Log In dialog box from a specific server, you will not have the option of logging into All Servers.

   If the server you want to log into is not shown, click **Find Server...** to attempt to locate the server.

3. Enter your **User Name** and **Password**, or select the **Use current Windows credentials** check box if your system administrator has imported your Windows account information into the server.

4. Click **Log In**.

After logging in the first time, you can configure automatic login from the client Setup dialog box. See General for more information.

Logging Out

You can log out of one or all servers at any time in the Client software.

To	Do this
Log out of an individual server	1. Right-click the server in the System Explorer and select **Log Out**.
Log out of all servers	1. Select **File > Log out**. 2. When the Log Out dialog box appears, click **Yes**.

Navigating the Application

Once you log in, the Avigilon Control Center Client application window is where you setup your surveillance system, monitor video, and view, search, and export recorded video.

Note: Some features are not displayed if the server does not have the required license, or if you do not have the user permissions to access the feature.

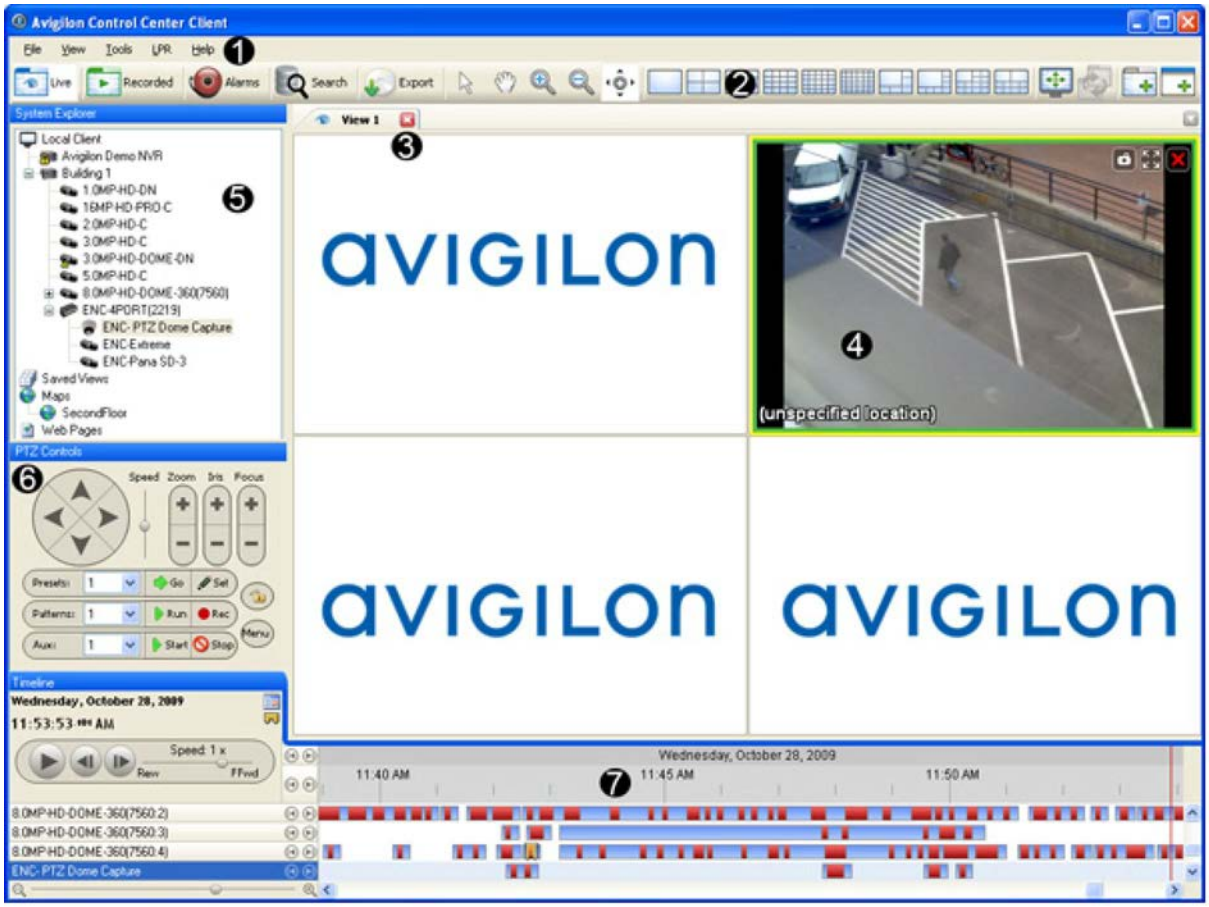

Figure A. Avigilon Control Center Client application window.

	Area	Description
	Workspace	The right pane where the feature tabs appear.
1	Menu bar	A standard Windows application menu that provides access to application features not available on the Toolbar.
2	Toolbar	Provides quick access to commonly used tools. If any buttons are missing from your toolbar, click the small down arrow on the right-edge of the toolbar to display the hidden buttons.
3	View	Provides a way to organize image panels. You can have multiple Views open at once. This is the most common tab in the Workspace.
4	Image panel	Displays live or recorded video from a single camera.
5	System Explorer	Displays surveillance system components such as servers,

		cameras, views, and maps.
6	PTZ Controls	Provides a way to control pan and tilt and zoom (PTZ) cameras.
7	Timeline	Displays the timeline for a recorded video, and contains color-coded events. This tool allows you to select a date and time for playback, and controls the playback rate. **Note:** The Timeline only appears when displaying recorded video.

Viewing Live and Recorded Video

Live and recorded video are displayed in Views. A View is a tab composed of image panels. Views allow you to organize how video is monitored, while image panels allow you to control the video image display quality and other features that are directly related to the video. To customize the way video is displayed, refer to the *Video* section of this guide.

Note: Some features are not displayed if the server does not have the required license, or if you do not have the user permissions to access the feature.

Tip: You can choose to simultaneously watch live video in some panels and recorded video in other panels, or only view one type of video per View.

1. Drag a camera from the System Explorer pane to an empty image panel in the View.

   The video from the camera is displayed. By default, live video is displayed when you first add a camera to an image panel.

2. To switch the View between live and recorded video, perform one of the following:

   - Select **View > Live** or **Recorded**.
   - On the toolbar, select either

or

.

3. To switch individual panels between live and recorded, right-click the image panel and select either **Live** or **Recorded**.

Image panels displaying live video appear with a blue border, while image panels displaying recorded video appear with a green border.

Setup

The default settings configured in the Avigilon Control Center Client software allows you to start working with the application immediately after installation.

If you have special requirements, refer to the following sections to configure your settings:

Note: Some features are not displayed if the server does not have the required license, or if you do not have the user permissions to access the feature.

Connect/Disconnect Cameras

You can connect and disconnect cameras to servers using the Connect/Disconnect Cameras dialog box.

A camera's connection status is indicated by the status icon beside the camera name in the System Explorer.

Icon	Definition
Camera Connected	The camera is connected to the server.
Camera Connection Error	The camera cannot connect to a server. This may be because the camera is no longer on the network or there is a network conflict
Camera Disconnected	The camera is disconnected from the server but there is recorded video for the camera remaining on the server.
No icon	The camera is disconnected from the server and there is no recorded video remaining on the server.

Discovering a Camera

When cameras are connected to the Avigilon HD Surveillance System, they should be automatically discovered by the Avigilon Control Center Client software.

If a camera is not automatically discovered, you can attempt to manually discover the camera on the network.

1. From the **Tools** menu, select **Connect/Disconnect Cameras**.

   In the Connect/Disconnect Cameras window, all Avigilon cameras located on the same subnet as the computer running the Avigilon Control Center Server software are automatically detected and appear in the Discovered Cameras area.

If the camera you want to connect to is on a different subnet, or is manufactured by a third party, perform the following:

1. At the top of the Connect/Disconnect Cameras dialog box, click **Find Camera...**.
2. In the Find Camera dialog box, complete the following fields:

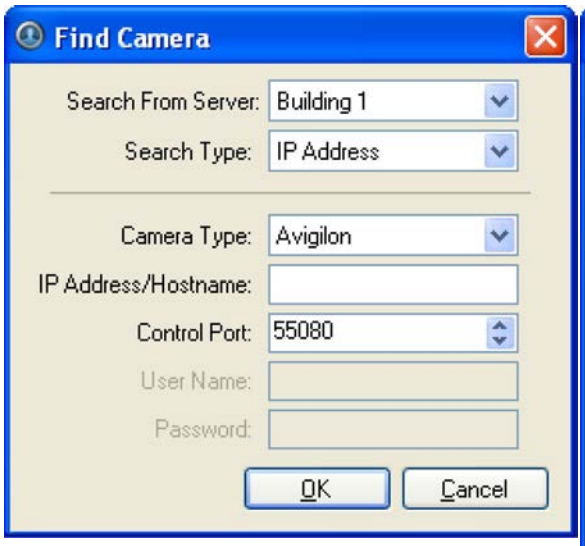

Figure A. Find Camera dialog box: IP Address

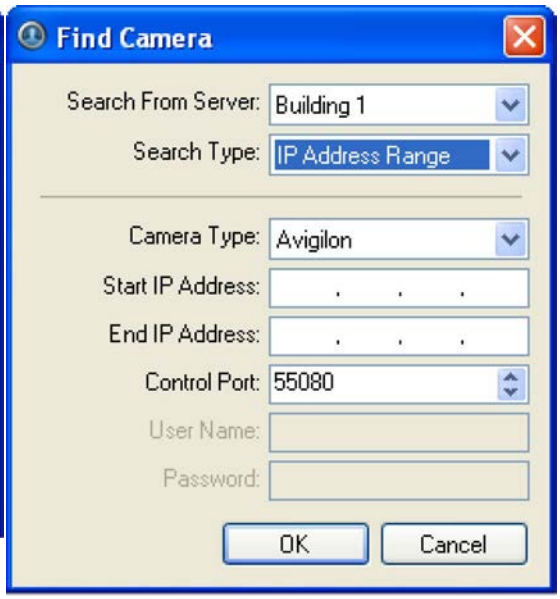

Figure B. Find Camera dialog box: IP Address Range

- **Search From Server:** select the server that you want the camera to connect to.
- **Search Type:** select a search type.
- **Camera Type:** select the camera's brand name.

  Tip: Select ONVIF to discover cameras that are ONVIF complaint.

- **IP Address/Hostname:** (For IP Address search only) enter the camera's IP address or hostname. The camera and server's gateway IP address must be set correctly for the camera to be found.
- **Start IP Address** and **End IP Address:** (For IP Address Range search only) enter the start and end IP addresses. Only addresses in that range will be searched for the selected camera type.
- **Control Port:** enter the camera control port number.
- Provide the **User Name** and **Password** for the camera if required by the camera manufacturer .

3. Click **OK**.

If the camera is discovered, it will appear in the Discovered Cameras area.

Connecting a Camera to a Server

Once the camera has been discovered on the network, it can be connected to the server.

1. From the **Tools** menu, select **Connect/Disconnect Cameras**. The Connect/Discover Cameras dialog box appears.

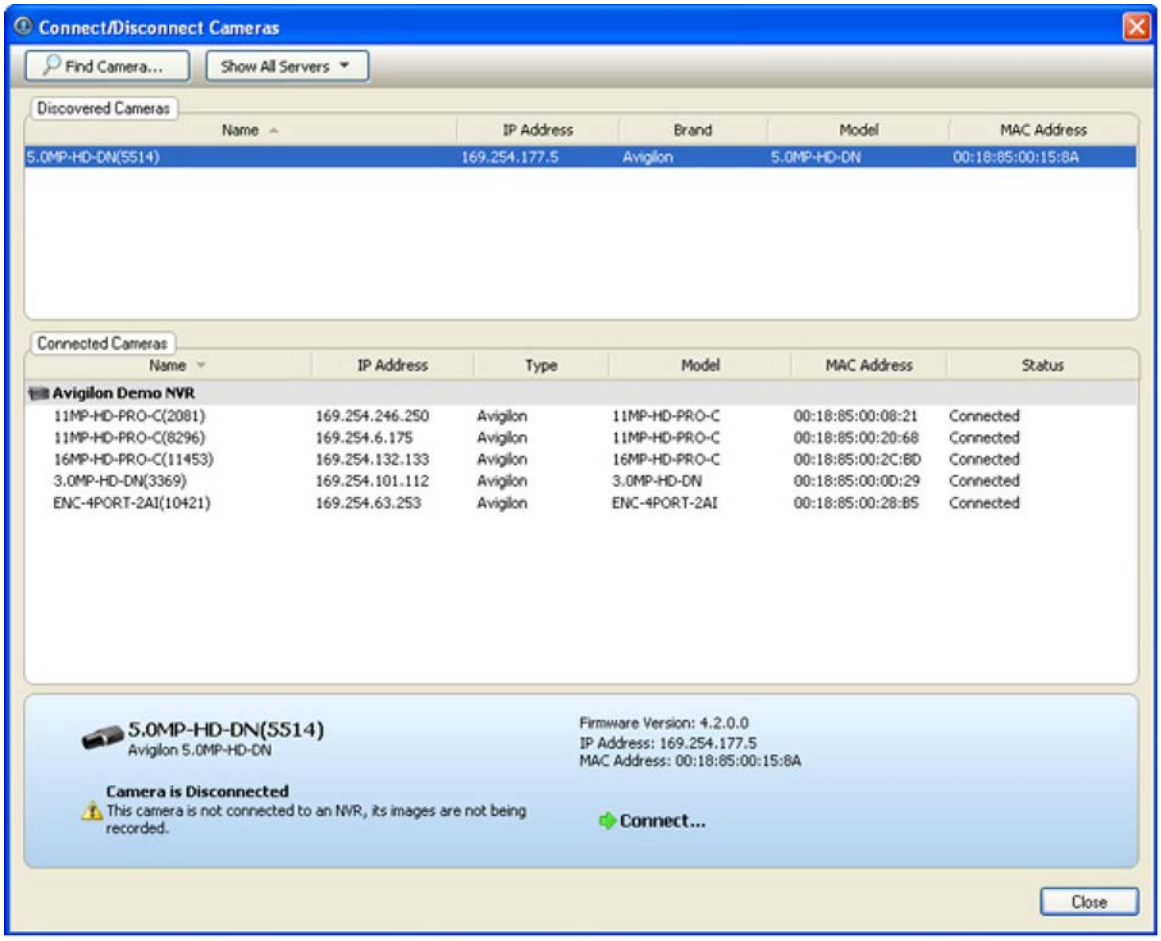

Figure A. Connect/Disconnect Cameras dialog box

2. In the Discovered Cameras area, select a camera then click **Connect...**.

   Tip: You can also drag the camera to a server on the Connected Cameras list, then you can skip the following step.

3. In the Connect Camera dialog box, select the server you want the camera to connect to.

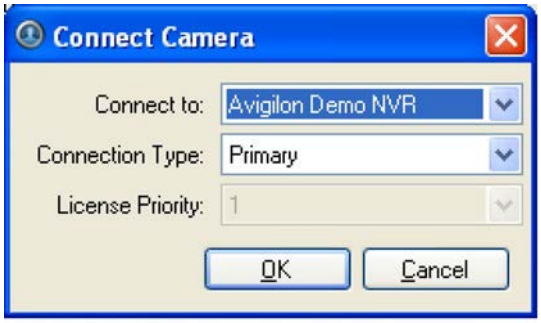

Figure B. Connect Camera dialog box

4. In the **Connection Type** drop down list, select one of the following:

- **Primary:** the camera will automatically connect to this server if they are on the same network.
- **Secondary:** the camera will attempt to connect to this server if they are on the same network, and the primary server is not available.
- **Tertiary:** the camera will attempt to connect to this server if they are on the same network, and the primary and secondary servers are not available.

5. In the **License Priority** drop down list, select the appropriate license priority. **1** is the highest priority and **5** is the lowest.

   Note: This option is only available if you are connecting to a secondary or tertiary server.

   The license priority setting determines the order that cameras are connected to the server. The server will attempt to connect cameras with a higher license priority before cameras with lower priority. If the server does not have enough camera channel licenses, low priority cameras may not be connected. A camera channel license is only used when the camera actually connects to the server.

6. Click **OK**.
7. If the camera is password protected, the Camera Authentication dialog box appears. Enter the camera's username and password, then click **OK**.
8. Close the Connect/Disconnect Camera dialog box.

Editing the Camera Connection to the Server

1. From the **Tools** menu, select **Connect/Disconnect Cameras**.
2. In the Connect/Disconnect Cameras dialog box, select the camera connection you want to edit from the Connected Cameras list.
3. Click **Edit** and make the required changes to the Connection Settings dialog box.
4. Click **OK**.

Disconnecting a Camera from a Server

1. From the **Tools** menu, select **Connect/Disconnect Cameras**.
2. In the Connect/Disconnect Cameras dialog box, select the camera you want to disconnect from the Connected Cameras list.
3. To disconnect the camera from the server perform, one of the following:

- Click **Disconnect**.
  The camera is disconnected from the server and moved to the Discovered Cameras list.
- Drag the camera into the Discovered Cameras list.

Server Setup

The Avigilon Control Center Server is setup by default to only record image data when events occur. In the Client software, you can use the server Setup dialog box to configure the server to record continuously, or schedule cameras to only record at specific times.

The server Setup dialog box also allows you to create alarms, schedule automatic backup of image data, set user access permissions, configure email notifications, and add POS transaction engines.

Note: Some features are not displayed if the server does not have the required license, or if you do not have the user permissions to access the feature.

Accessing the Server Setup

Perform one of the following steps to open the server Setup dialog box:

- Select **Tools > Setup...** then select the server you want to setup from the left pane.
- In the System Explorer pane, right-click the server and select **Setup**.

Note: Some features are not displayed if the server does not have the required license, or if you do not have the user permissions to access the feature.

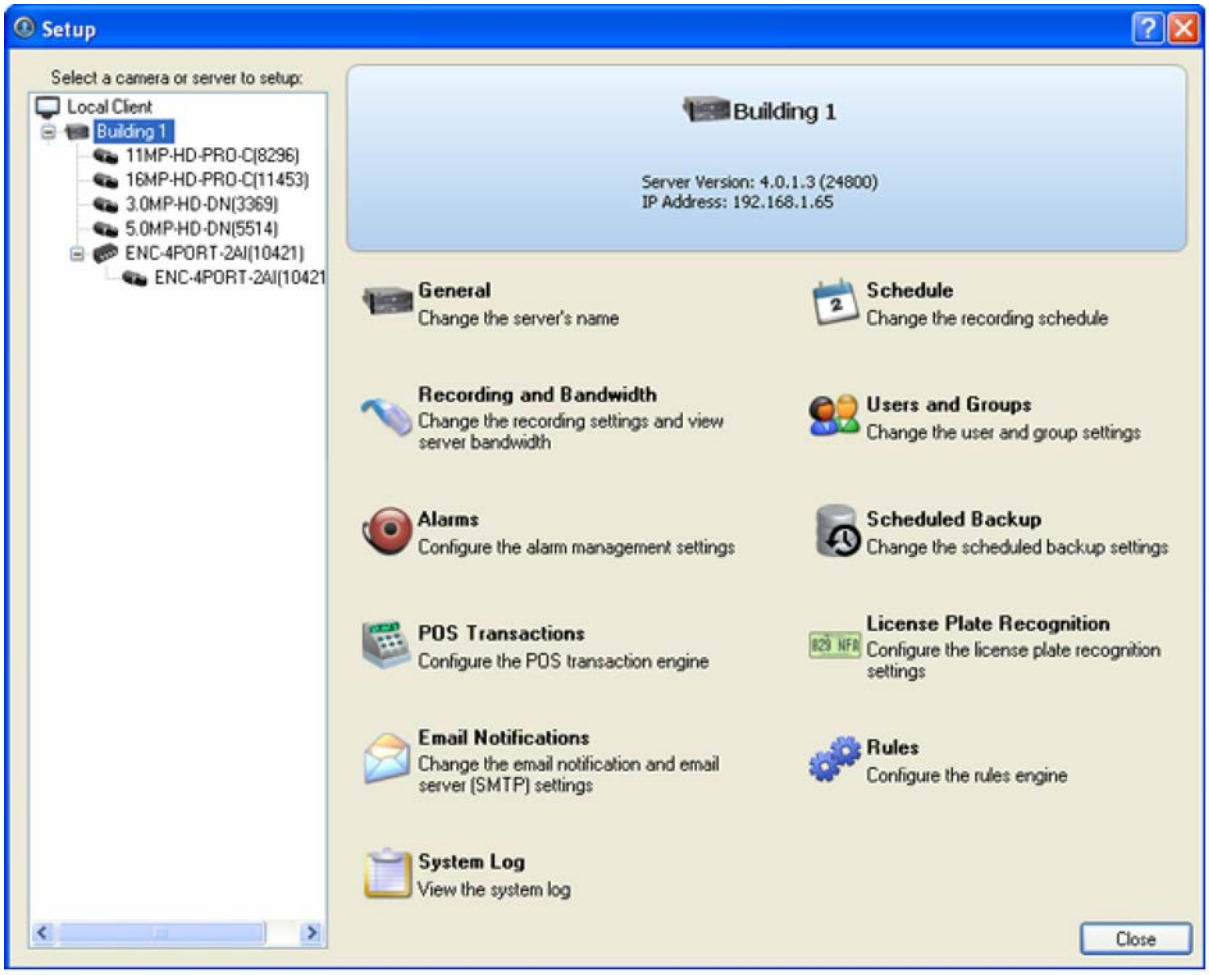

Figure A. Server Setup dialog box

General

Use the General dialog box to customize the identity of each server.

Changing the Server's Name

The default name for the server may not be useful for your purposes. Use the General dialog box to change the server's name to something more appropriate to your needs.

1. Right-click a server in the System Explorer and select **Setup** to open the server Setup dialog box. See Accessing the Server Setup for more information.
2. Click **General**.
3. In the General dialog box, enter a new server name.

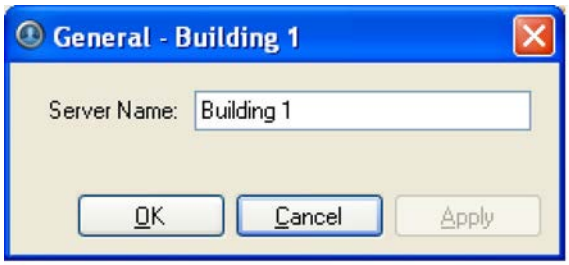

Figure A. General dialog box

4. Click **OK**.

Schedule

Use the Schedule dialog box to customize the recording schedule for the cameras connected to the server. All Avigilon High Definition Surveillance Systems are set to record whenever motion or events occur by default .

Once the recording schedule is set, camera recordings are made automatically.

Using Templates to Modify the Recording Schedule

You can modify the default recording schedule template to suit your needs or you can add new templates as required. For example, you can create one recording schedule template for the weekdays and another for the weekend.

Adding a Template

1. Right-click a server in the System Explorer and select **Setup** to open the server Setup dialog box. See Accessing the Server Setup for more information.
2. Click **Schedule**.
3. In the Schedule dialog box, click **Add Template** in the Templates pane.

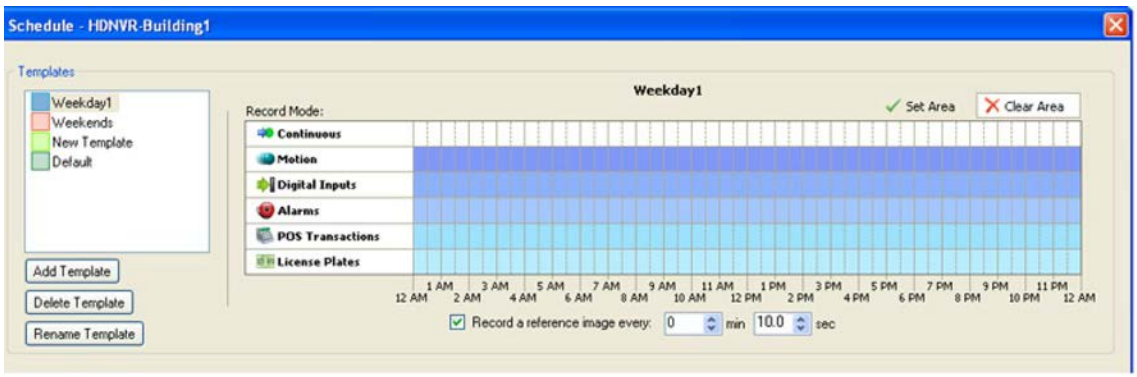

Figure A. Schedule dialog box

4. Enter a name for the template.
5. Click the **Set Area** button then click or drag the cursor across the **Record Mode** timeline to enable cameras to record during the specified hours for the highlighted events.

Record Mode	Definition
Continuous	Record image data continuously. Enable the continuous mode to record all image data.
Motion	Record image data only when motion is detected.
Digital Input	Record image data only when a digital input is activated.
Alarms	Record image data only when an alarm has been activated.
POS Transactions	Record image data only when point of sale (POS) transactions are made.
License Plates	Record image data only when a license plate is detected.

6. To disable recording in parts of the template, click the **Clear Area** button then click or drag the cursor across the timeline until the required Record Modes and time ranges are blank.
7. If cameras are not recording in Continuous mode for the entire template period, you can configure cameras to record reference images between events in the recording schedule. Select the **Record a reference image every:** check box, and specify the time range between each reference image.

Editing and Deleting a Template

1. Right-click a server in the System Explorer and select **Setup** to open the server Setup dialog box. See Accessing the Server Setup for more information.
2. Click **Schedule**.
3. In the Schedule dialog box, select a template from the Templates pane and perform one of the following:
   - To edit a template, modify the schedule.
   - To rename a template, click **Rename Template** and enter a new name.
   - To delete a template, click **Delete Template**.
4. Click **OK**.

Setting Up a Weekly Recording Schedule

You can setup a week's recording schedule by applying different templates to cameras for specific days of the week.

1. Right-click a server in the System Explorer and select **Setup** to open the server Setup dialog box. See Accessing the Server Setup for more information.
2. Click **Schedule**.
3. In the Schedule dialog box, select a template from the Templates pane.
4. In the Default Week area, select the days of the week to apply the template schedule for each camera.

Figure A. Schedule dialog box: Default Week

5. Click **OK**.

Recording and Bandwidth

You can use the Recording and Bandwidth dialog box to change the server recording settings, and view the bandwidth used by each camera that is connected to the server.

Changing Recording Settings

1. Right-click a server in the System Explorer and select **Setup** to open the server Setup dialog box. See Accessing the Server Setup for more information.
2. Click **Recording and Bandwidth**. The Recording and Bandwidth dialog box appears.

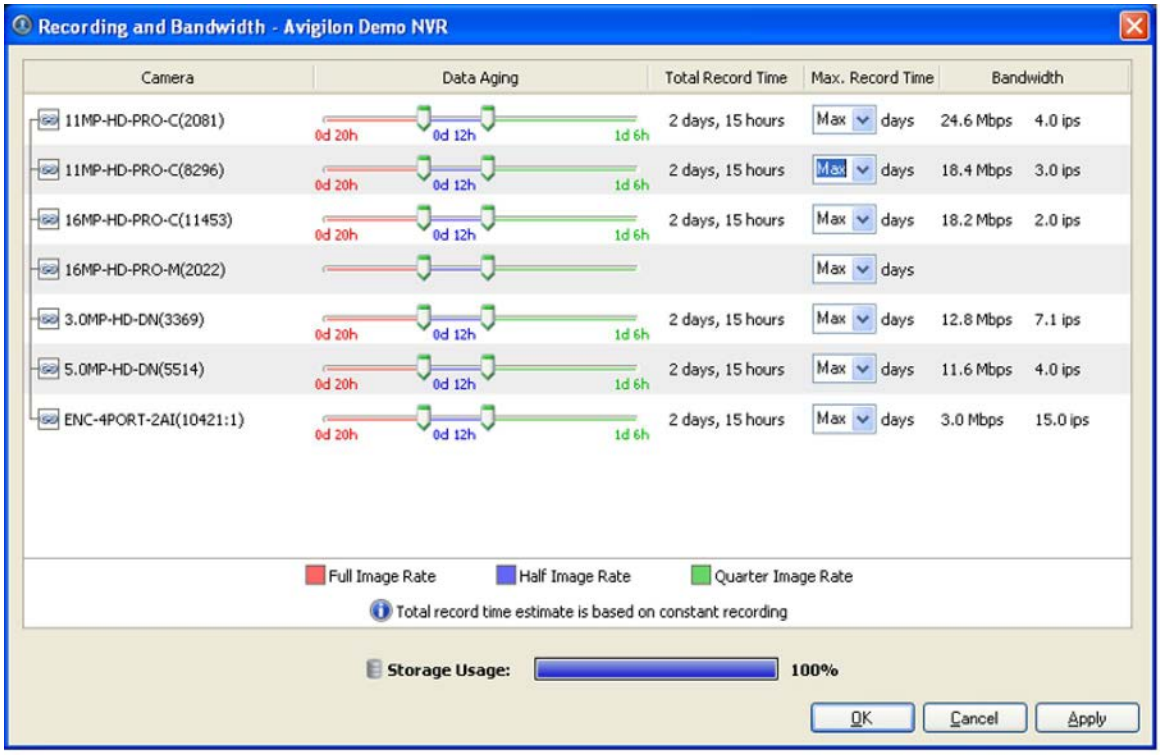

Figure A. Recording and Bandwidth dialog box

3. In the Data Aging area for each camera, move the sliders to adjust the amount of time video is stored at full, half, and quarter image rate.

   Note: Data Aging is only enabled for cameras using JPEG 2000 or JPEG compression.

   The settings for all linked cameras are changed at the same time. To control the settings for a single camera, break the camera's link by clicking the **Link** icon to the left of the camera's name and make the necessary adjustments.

4. In the **Max. Record Time** field, manually enter a maximum record time or select one of the options from the drop down list for each camera.

   If the auto-generated Total Record Time is shorter than the Max. Record Time setting, it may be an indication that your actual record time will be shorter than the Max. Record Time setting.

5. Click **OK**.

Users and Groups

When users are added to the Avigilon system, they are assigned to an access group that defines their access permissions on a server. Create and manage users and groups in the Users and Groups dialog box.

Adding a User

You can add users and manage their access permissions by assigning users to specific access groups.

1. Right-click a server in the System Explorer and select **Setup** to open the server Setup dialog box. See Accessing the Server Setup for more information.
2. Click **Users and Groups**.
3. In the User and Groups dialog box, click **Add User**.

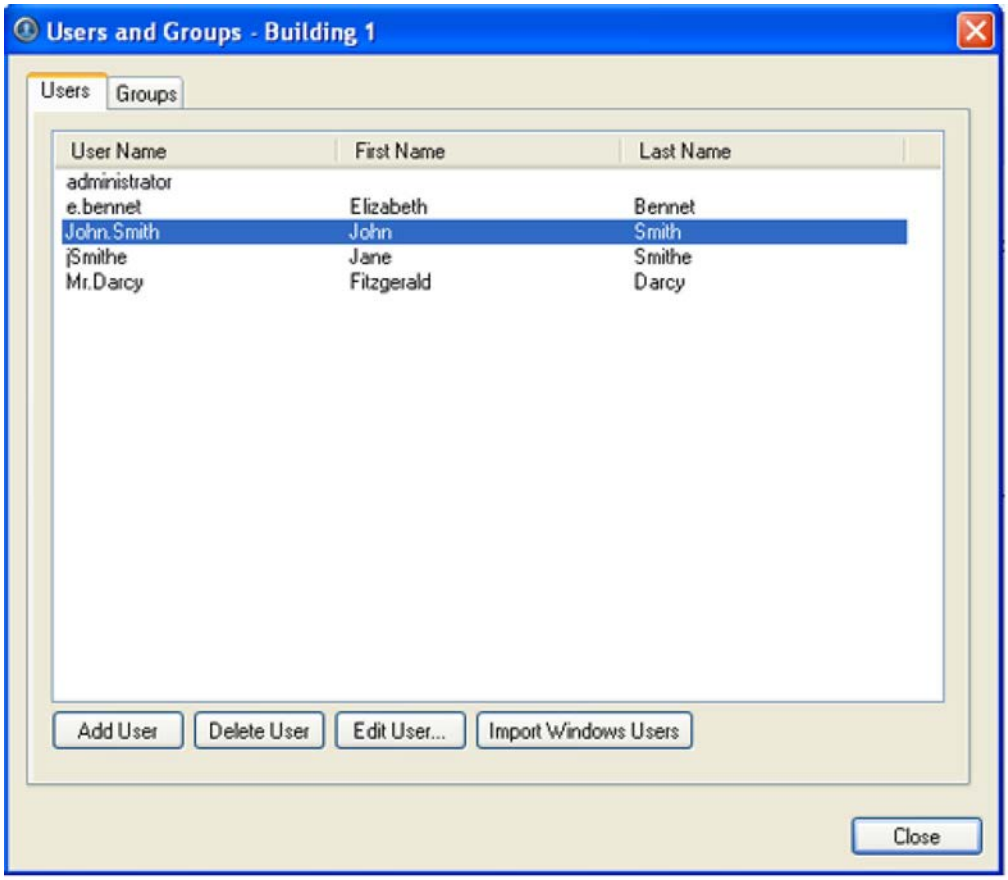

Figure A. User and Groups dialog box

4. When the Add User dialog box appears, complete the User Information area.

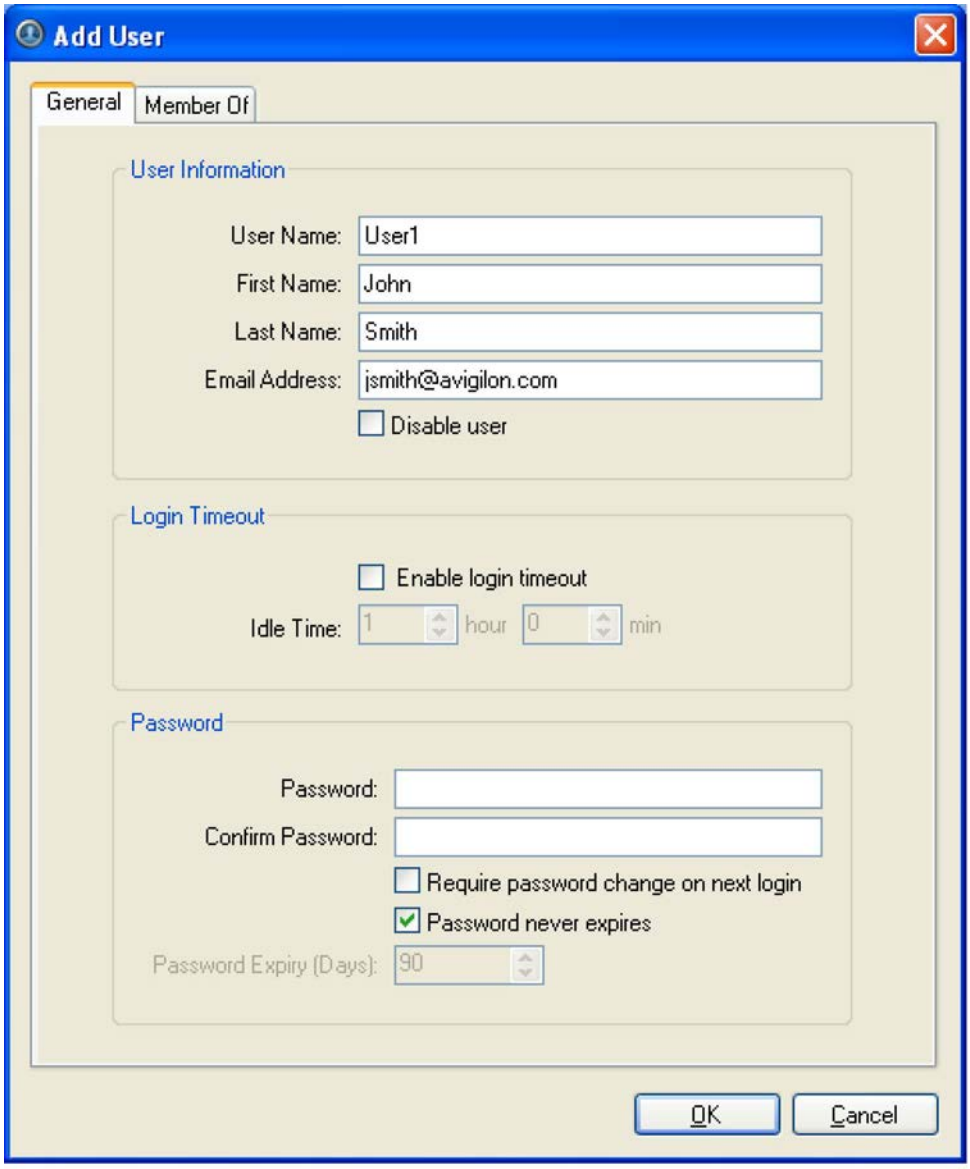

Figure B. Add User dialog box, General tab

5. If you don't want to make this user active yet, select the **Disable user** check box.
6. In the Login Timeout area, select the **Enable login timeout** check box to allow the application to log out the user after the application has been idle for the specified amount of time.
7. In the Password area, complete the following fields:
    - **Password:** enter a password for the user.
    - **Confirm Password:** re-enter the password.
    - **Require password change on next login:** select this check box if you want the user to personalize the password after their first login.

- **Password Expiry (Days):** specify the number of days before the password must be changed. This field is not required if the password never expires.
- **Password never expires:** select this check box if the password does not need to be changed.

8. Select the Member Of tab and assign the user to one or more access groups by selecting the appropriate check box in the Groups list.

   The other two columns display the permissions associated with the selected Groups.

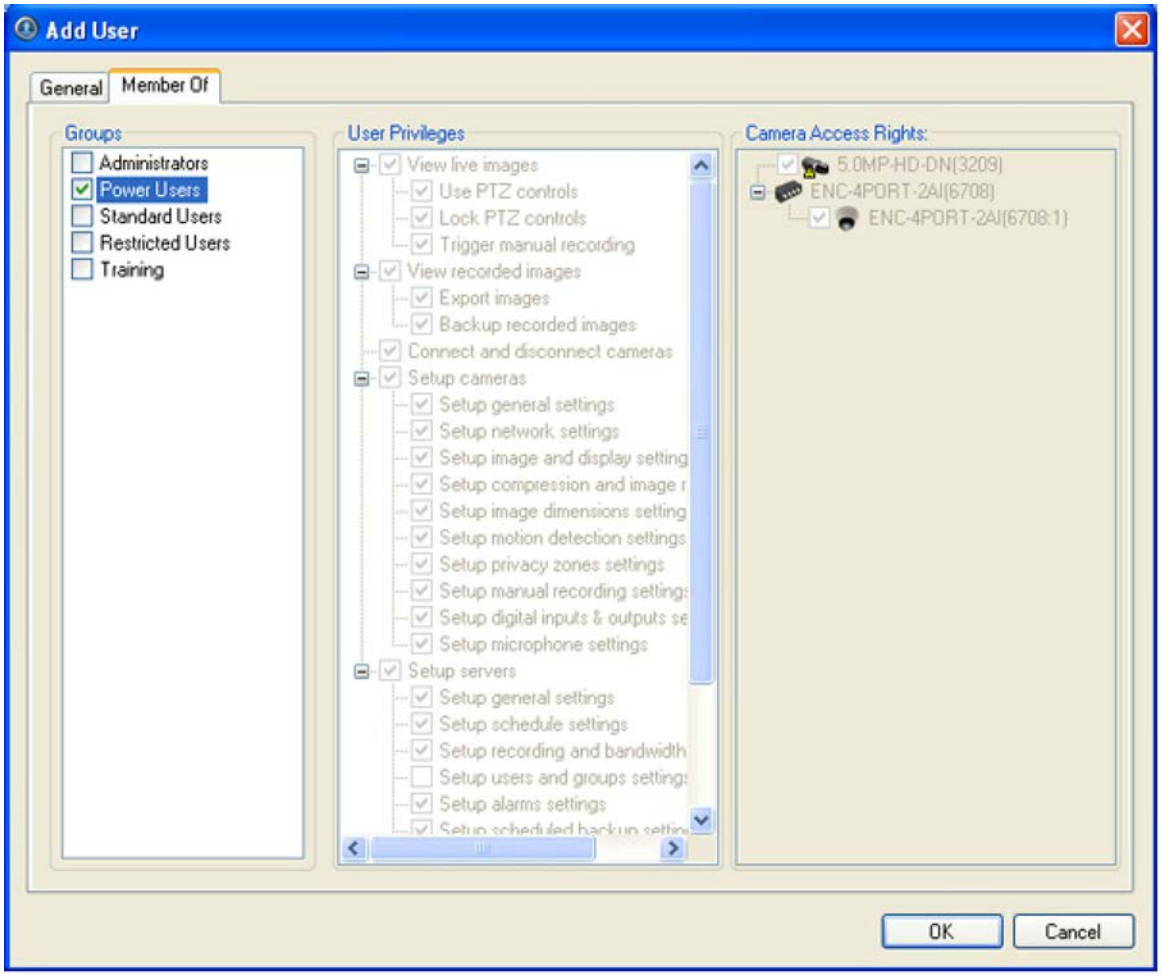

Figure C. Add User dialog box, Member Of tab

9. Click **OK**. The user is added to the server.

Editing and Deleting a User

You can edit the details of an existing user, or delete the user account that is no longer required.

Note: If a user has access to more than one server, the user needs to be removed from each server individually.

1. Right-click a server in the System Explorer and select **Setup** to open the server Setup dialog box. See Accessing the Server Setup for more information.
2. Click **Users and Groups**.
3. In the Users and Groups dialog box, select a user and perform one of the following:
    - Click **Edit User** to edit the user's information. Refer to Adding a User or details about the editable options.
    - Click **Delete User** to delete the user.

Importing Windows Users

You can import Windows user accounts on to the server to allow users to log in using their Windows credentials.

1. Right-click a server in the System Explorer and select **Setup** to open the server Setup dialog box. See Accessing the Server Setup for more information.
2. Click **Users and Groups**.
3. In the Users and Groups dialog box, click **Import Windows Users**.
4. In the Select Users or Groups dialog box, locate the Windows user you wish to add by performing one of the following:
    - In the Select Users or Groups dialog box, enter the name of a Windows user or group in the **Enter the object names to select field** and click **OK**.
    - In the Select Users or Groups dialog box, click the **Advanced** button and search for the users or groups to import.

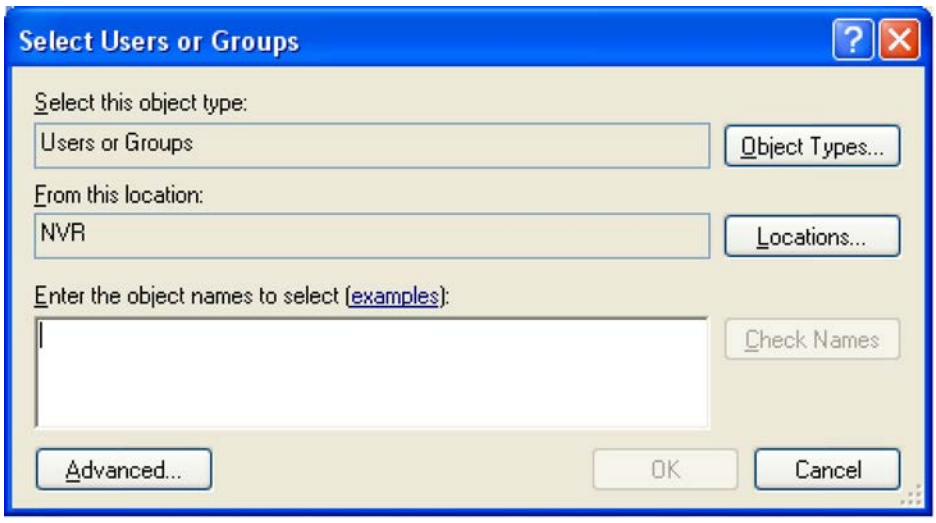

Figure A. Select Users or Groups dialog box

5. In the Import Windows Users dialog box, select the users you wish to import and assign the users to an access group by selecting the appropriate **Groups** check box.

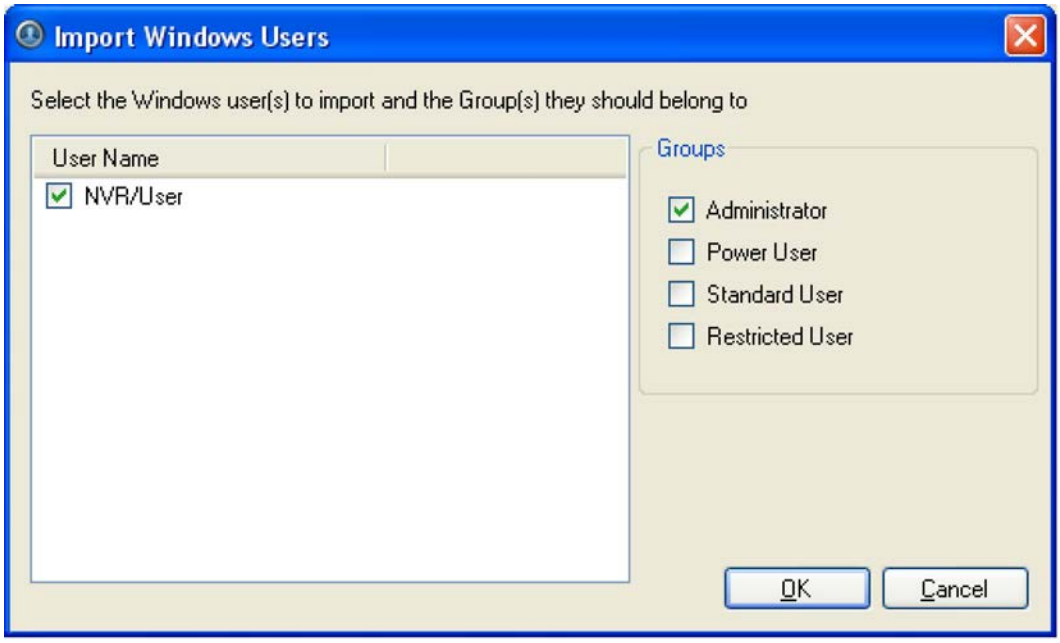

Figure B. Import Windows Users dialog box

Note: If you are importing multiple Windows users, be aware that you are assigning all selected users to the same access group.

6. Click **OK**.

Adding Groups

You can change users' access permissions by changing their access groups. Create new groups to define specific sets of access permissions.

Note: Access permissions for the Administrator group cannot be modified.

1. Right-click a server in the System Explorer and select **Setup** to open the server Setup dialog box. See Accessing the Server Setup for more information.
2. Click **Users and Groups**.
3. In the Users and Groups dialog box, select the Groups tab and click **Add Group**.

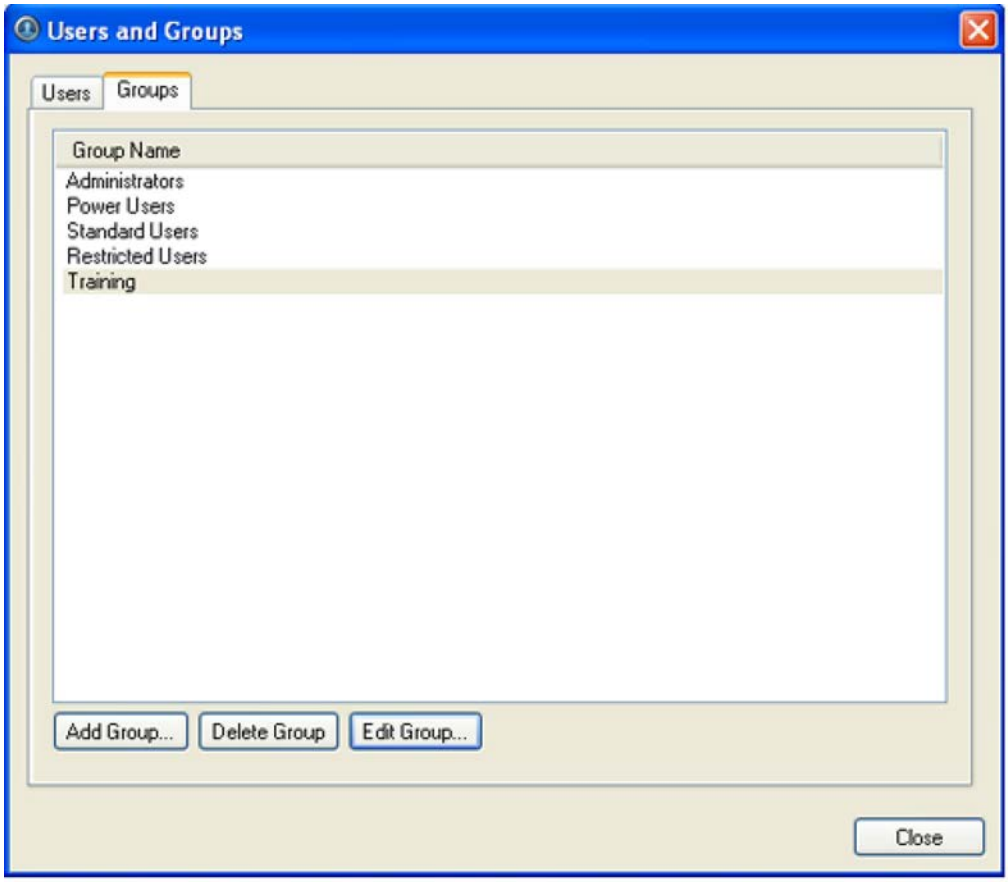

Figure A. User and Groups dialog box

4. In the Add Group dialog box, select a group to use as a template for your new group and click **OK**.

Figure B. Add Group dialog box

5. In the Edit Group dialog box, give the new group a name then select the permissions and camera access rights for the group.

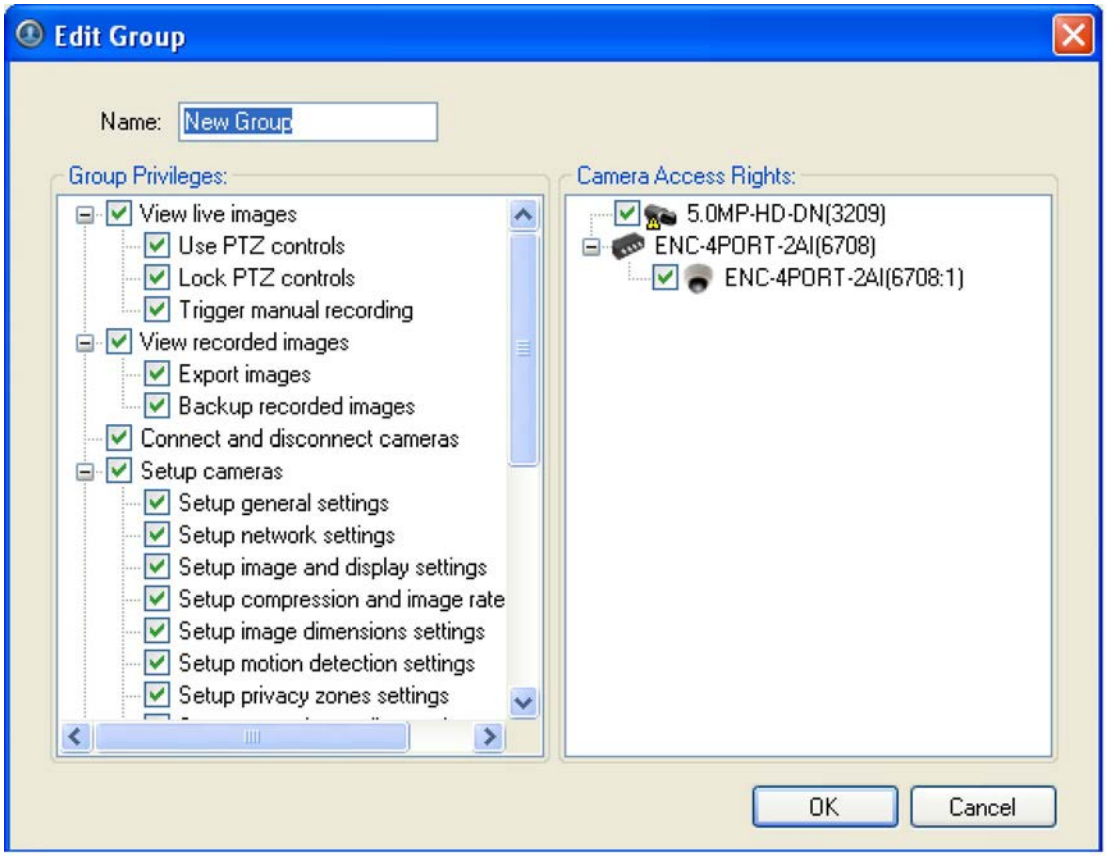

Figure C. Edit Group dialog box

6. Click **OK**.

Editing and Deleting a Group

You can change the access permissions for a set of users by editing their access group.

Note: The Administrators group cannot be edited or deleted.

1. Right-click a server in the System Explorer and select **Setup** to open the server Setup dialog box. See Accessing the Server Setup for more information.
2. Click **Users and Groups** and select the Groups tab.
3. Select a group and perform one of the following:
   - To edit the group, click **Edit Group**. In the Edit Group dialog box, change the permissions and camera access rights as required then click **OK**. Refer to Adding Groups for details about the editable options.
   - To delete the group, click **Delete Group**.

     Note: Default groups cannot be deleted.

Alarms

The Alarms dialog box allows you to create and configure alarms. Alarm triggers can include Motion Detection, Digital Input Activation, License Plate Watchlist match, POS Transaction Exception, Camera Error, System Error and External Software Event.

Adding a New Alarm

Alarms need to be added to the server Setup before they can be monitored in the Alarms tab.

1. Right-click a server in the System Explorer and select **Setup** to open the server Setup dialog box. See Accessing the Server Setup for more information.
2. Click **Alarms**.
3. In the Alarms dialog box, click **Add**.
4. Select the **Alarm Trigger Source** then select the required features for the alarm. Click **Next**.

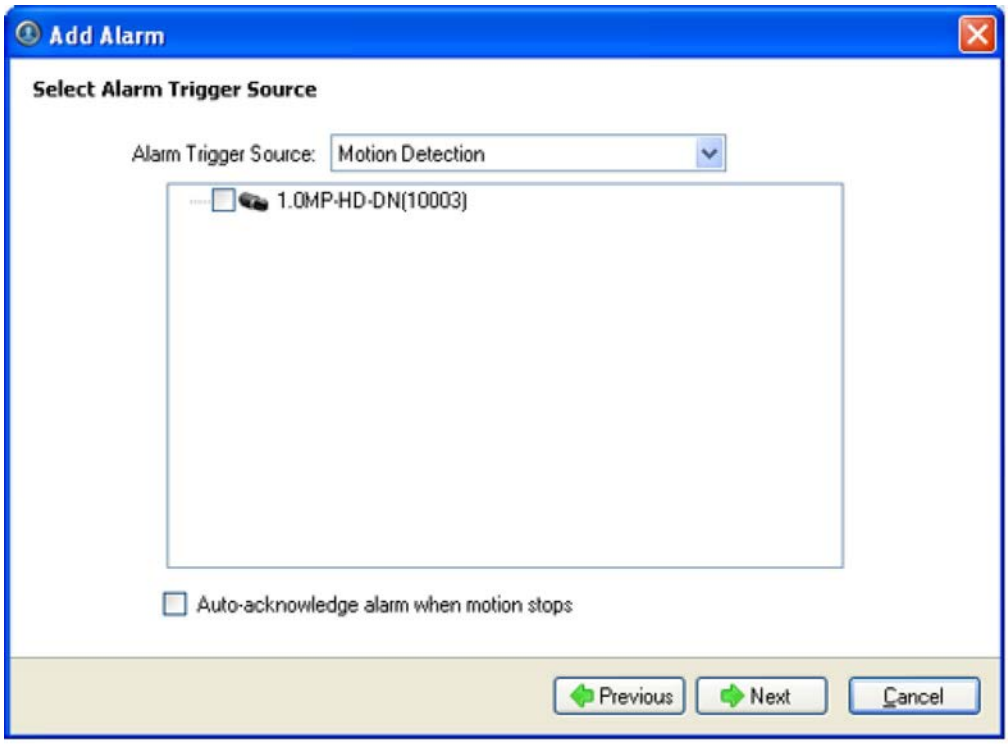

Figure A. Select Alarm Trigger Source page

5. Select the cameras to link to this alarm then complete the following:

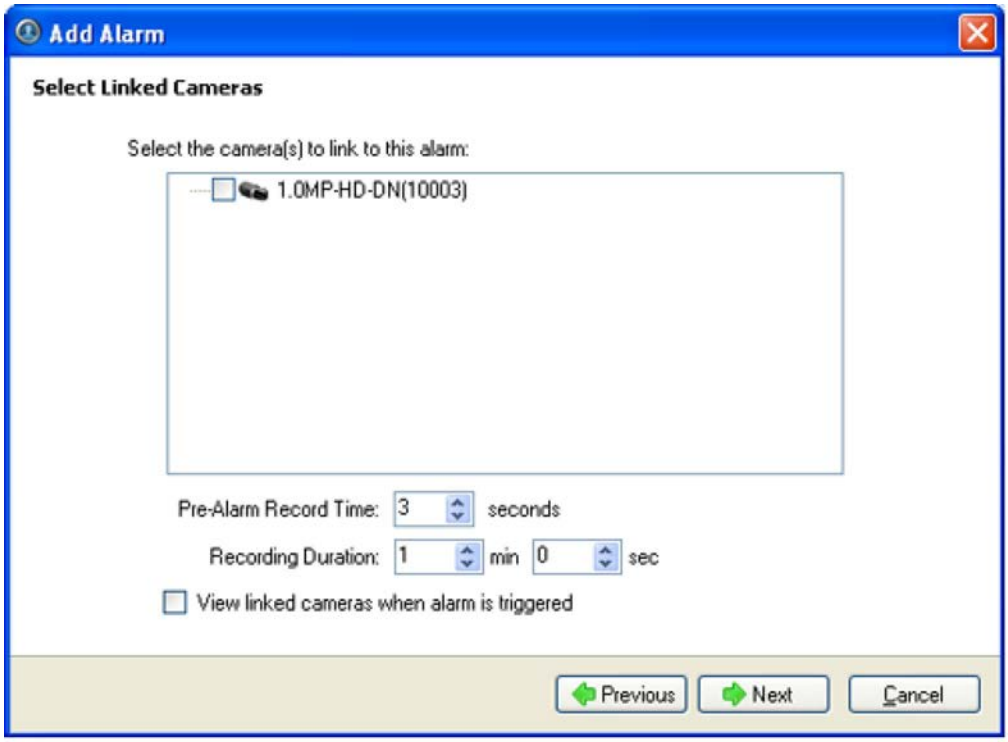

Figure B. Select Linked Cameras page

a. Set the **Pre-Alarm Record Time** and the **Recording Duration**.

b. Select the **View linked cameras when alarm is triggered** check box to automatically display the alarm video in a View when the alarm is triggered.

c. Click **Next**.

6. Select the groups or users who should receive alarm notifications, and decide if the alarm should play a sound. Then click **Next**.

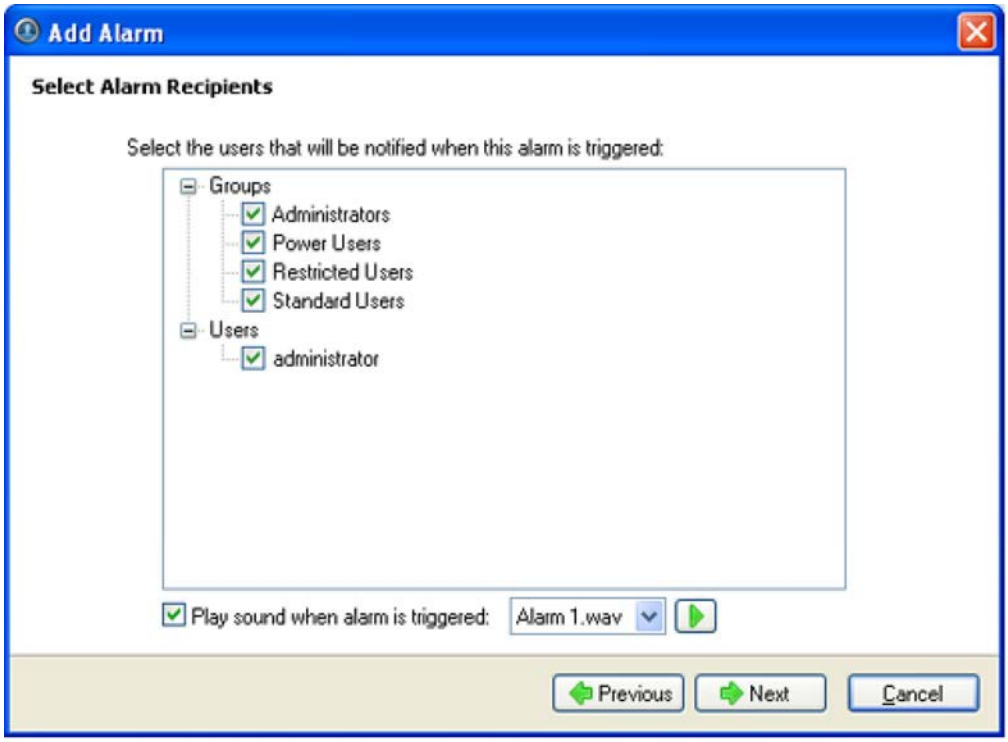

Figure C. Select Alarm Recipients page

7. (Optional) If you would like to trigger an action when an alarm is acknowledged, select the **Activate selected digital output(s) on alarm acknowledgement** check box.

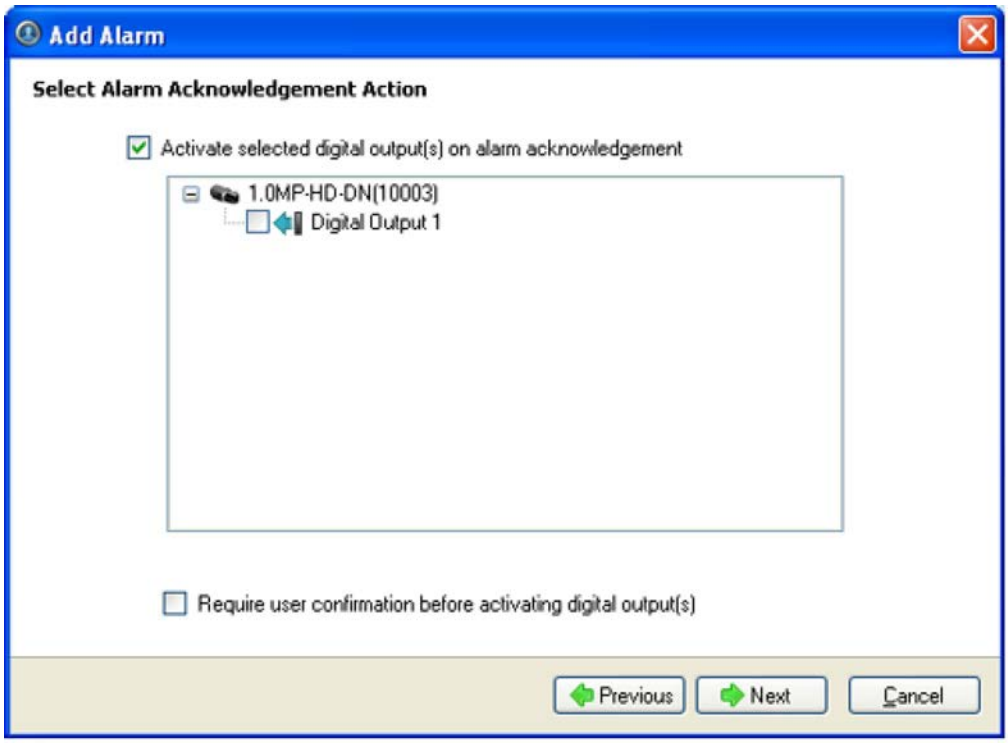

Figure D. Select Alarm Acknowledgement Action page

a. Select the digital outputs to be activated and specify the duration.

b. If the digital output should only be activated by user confirmation after an alarm has been acknowledged, select the **Require user confirmation before activating digital output(s)** check box.

c. Click **Next**.

8. On the Select Alarm Properties page, enter a name and select a priority number for the alarm. **Priority: 1** represents the highest alarm priority.

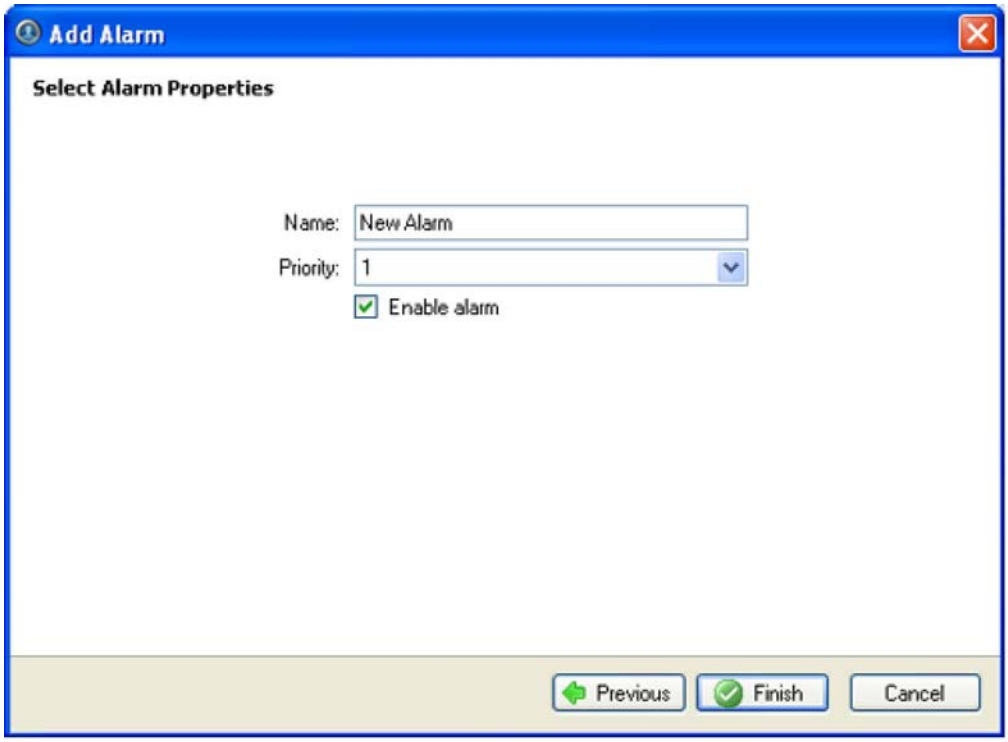

Figure E. Select Alarm Properties page

9. Click **Finish**.

Editing and Deleting Alarms

1. Right-click a server in the System Explorer and select **Setup** to open the server Setup dialog box. See Accessing the Server Setup for more information.

2. Click **Alarms**.

3. In the Alarms dialog box, select the alarm you want to modify.

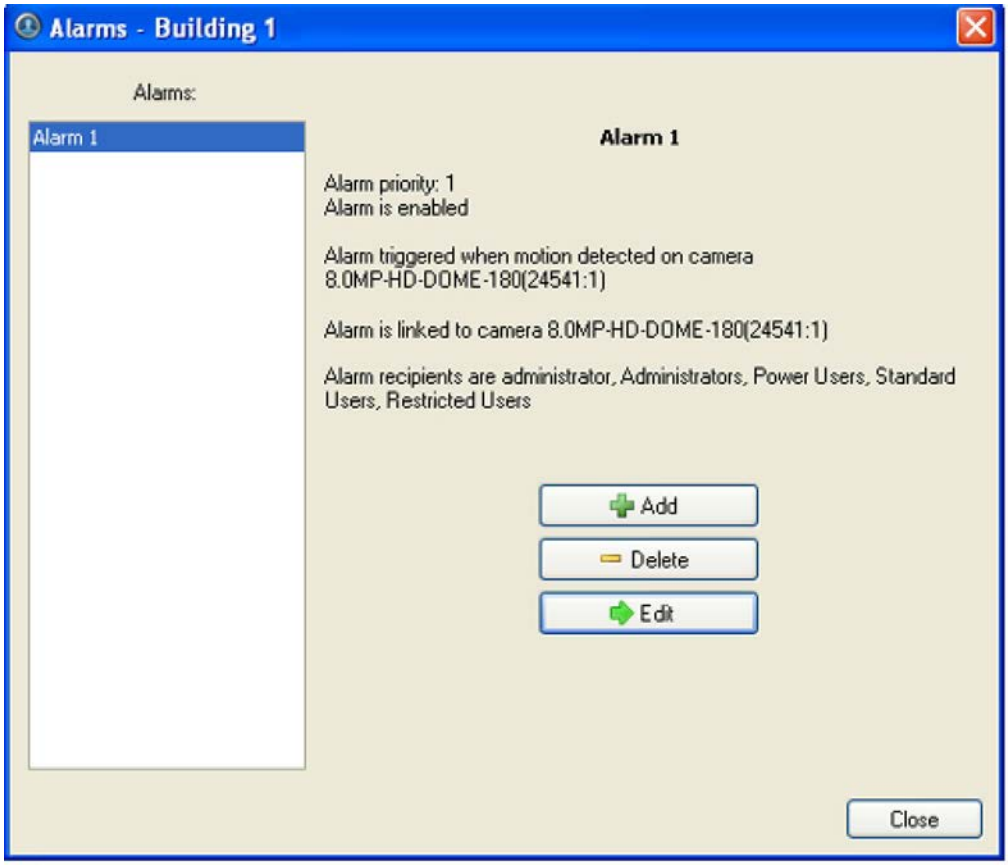

Figure A. Alarms dialog box: alarm properties

4. Perform one of the following:
    - Click **Edit** to edit the alarm. Go through the Add Alarm wizard and make the required changes on each page. On the last page, click **Finish**. Refer to Adding a New Alarm for details about the editable options.
    - Click **Delete** to delete the alarm.

Scheduled Backup

Data backup must be enabled on the server before scheduled backup settings can be modified in the Avigilon Control Center Client software.

See the *Avigilon Control Center Server User Guide* for more information about enabling backup on the server through the Avigilon Control Center Admin Tool.

Files are always backed up in the Avigilon Backup (AVK) format. You can review backed up video in the Avigilon Control Center Player.

Changing Scheduled Backup Settings

In the Scheduled Backup dialog box, configure when image data is backed up on the server.

Note: The video backup location is configured in the Avigilon Control Center Admin Tool. See the *Avigilon Control Center Server User Guide* for more information.

1. Right-click a server in the System Explorer and select **Setup** to open the server Setup dialog box. See Accessing the Server Setup for more information.
2. Click **Scheduled Backup**.

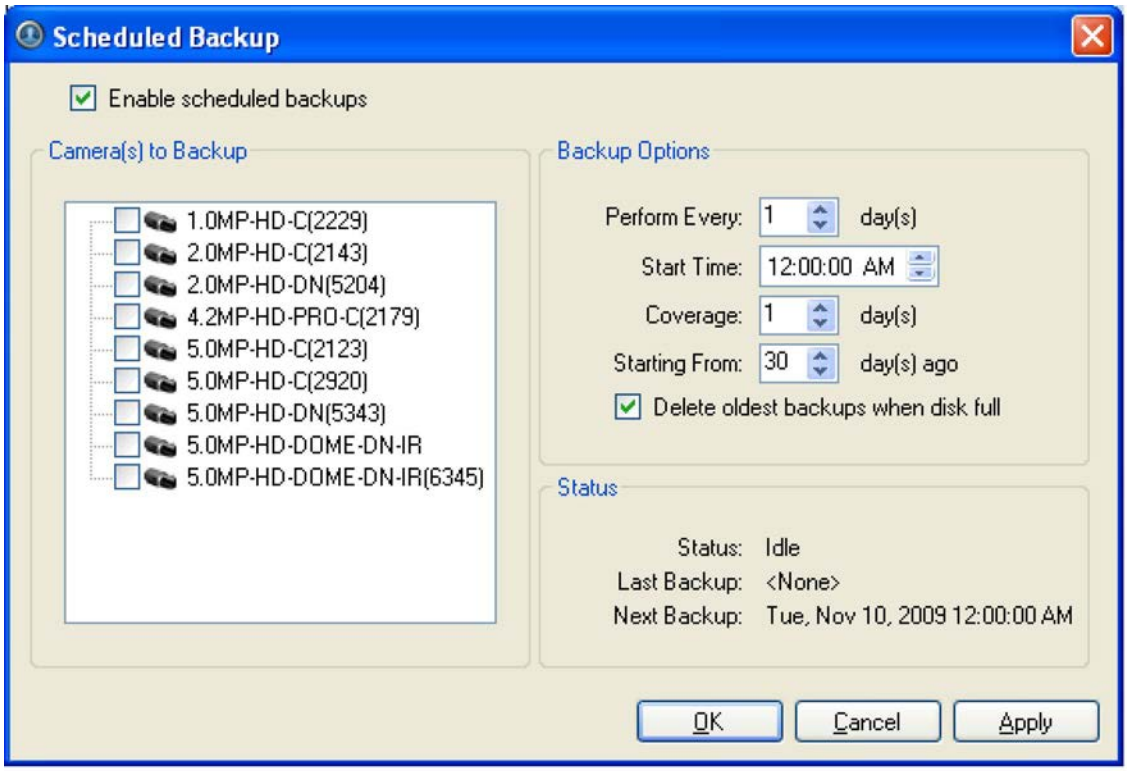

Figure A. Scheduled Backup dialog box

3. Select the **Enable scheduled backups** check box.
4. In the Camera(s) to Backup area select all the cameras to backup.
5. In the Backup Options area, complete the following:
   - **Perform Every <X> day(s):** specify the number of days between backups
   - **Start Time:** the time when backup occurs
   - **Coverage:** the amount of recorded image data that is backed up
   - **Starting From:** starting point for the backup

- **Delete oldest backups when disk full:** select this check box to automatically delete the oldest backups when the target disk is full

For example in the image above, the Scheduled Backup is configured to occur every day at 12a.m. The image data starting from 30 days ago is backed up and the back up only covers 1 day, so only the 30th day is backed up to the remote server.

6. Click **OK**.

   The Status area displays when the next backup will be.

POS Transactions

The Point of Sale (POS) Transaction Engine is a licensed feature that records video and raw data from POS transaction sources. POS transaction sources can be added to the Avigilon Control Center System and configured in the Client software.

Adding a POS Transaction Source

1. Right-click a server in the System Explorer and select **Setup** to open the server Setup dialog box. See Accessing the Server Setup for more information.
2. Click **POS Transactions**.
3. In the POS Transactions dialog box, click **Add**.
4. Enter the **Hostname/IP Address** and the **Port** for the POS Transaction Source device. Click **Next**.

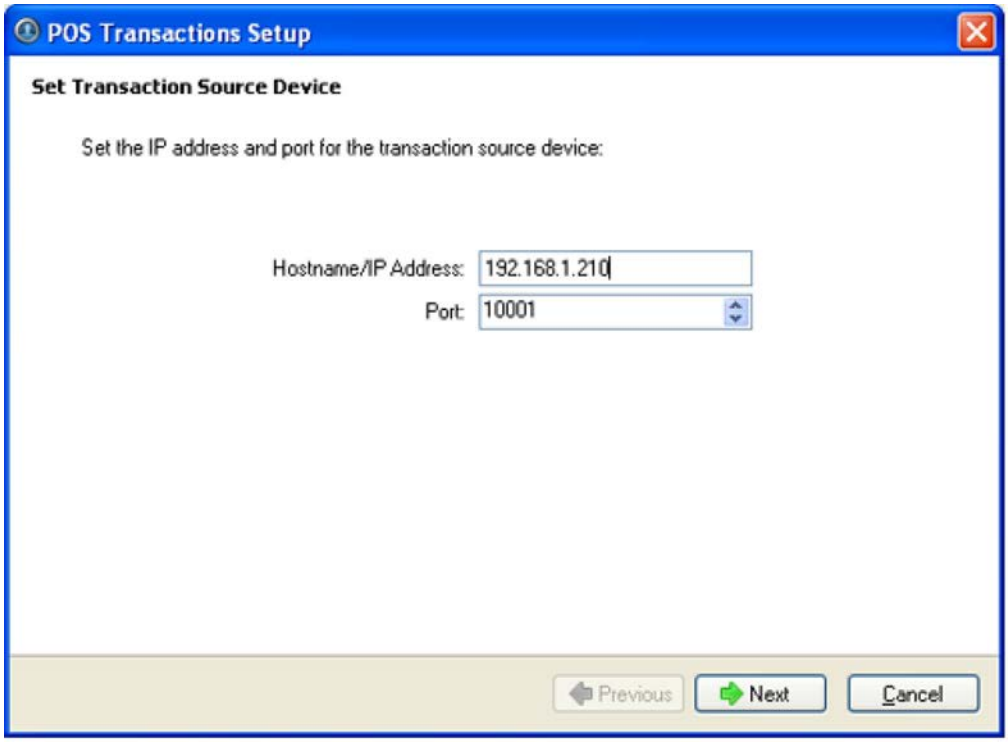

Figure A. Set Transaction Source Device page

5. Select a Transaction Source Data format and click **Next**.

   If the source data format needs to be added, click **Add**. Or, click **Copy From** to create a new data format based on the selected data format. See Adding a Transaction Source Data Format for more information.

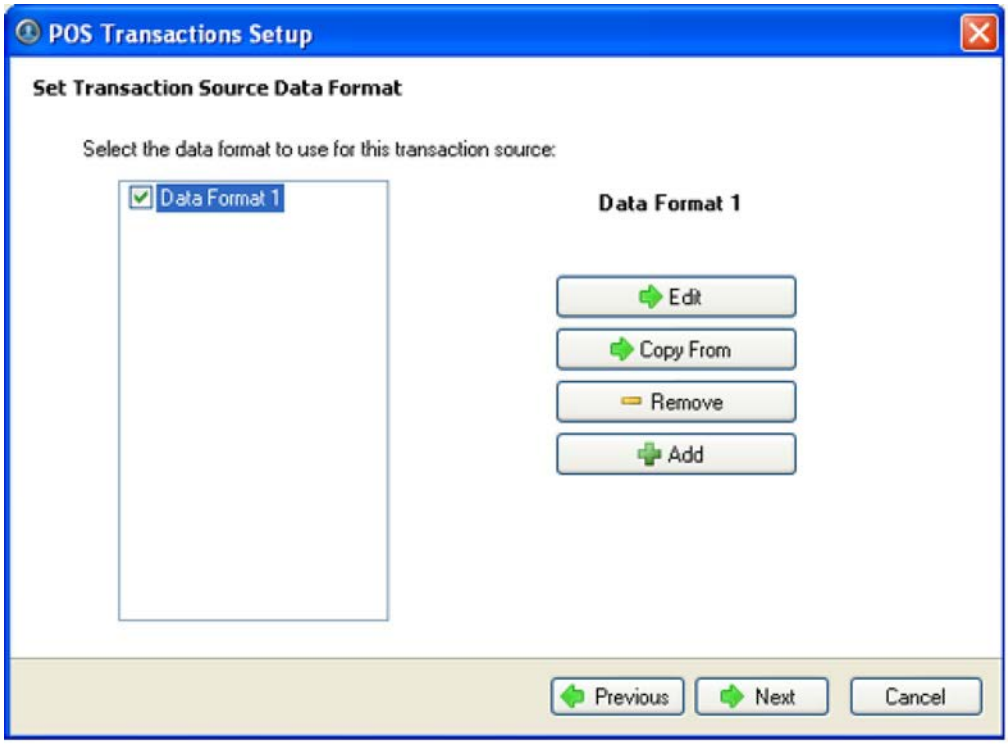

Figure B. Set POS Transaction Source Data Format page

6. On the Set Transaction Exceptions page, select any exceptions that should be monitored for on this transaction source and click **Next**. If no exceptions are required, just click **Next**.

   Click **Add** to add an exception. See Adding a Transaction Exception for more information.

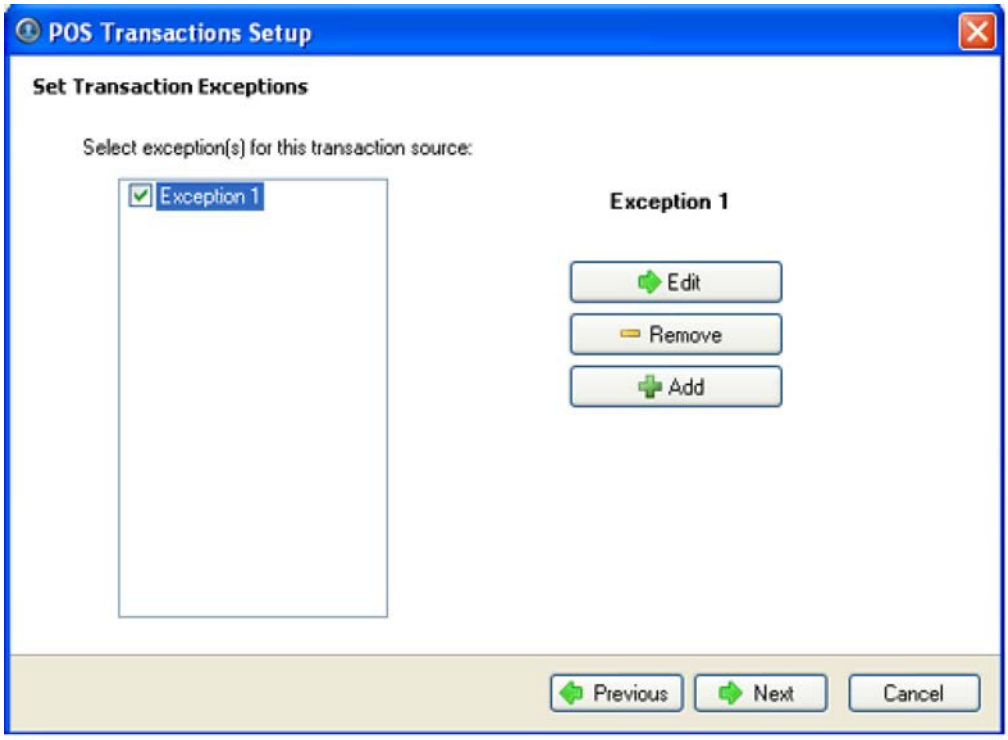

Figure C. Set Transaction Exceptions page

7. Select the cameras to link to the transaction source, and set the pre-transaction record time and post-transaction record time. Click **Next**.

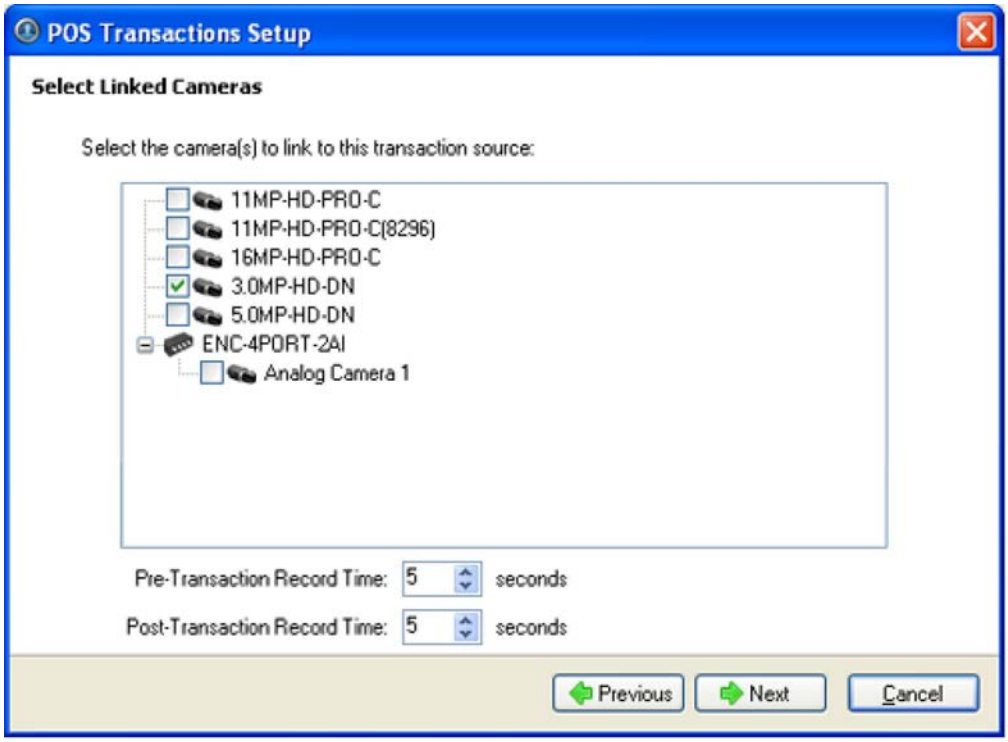

Figure D. Select Linked Cameras page

8. Enter a transaction source name and description, select **Enable transaction source**.

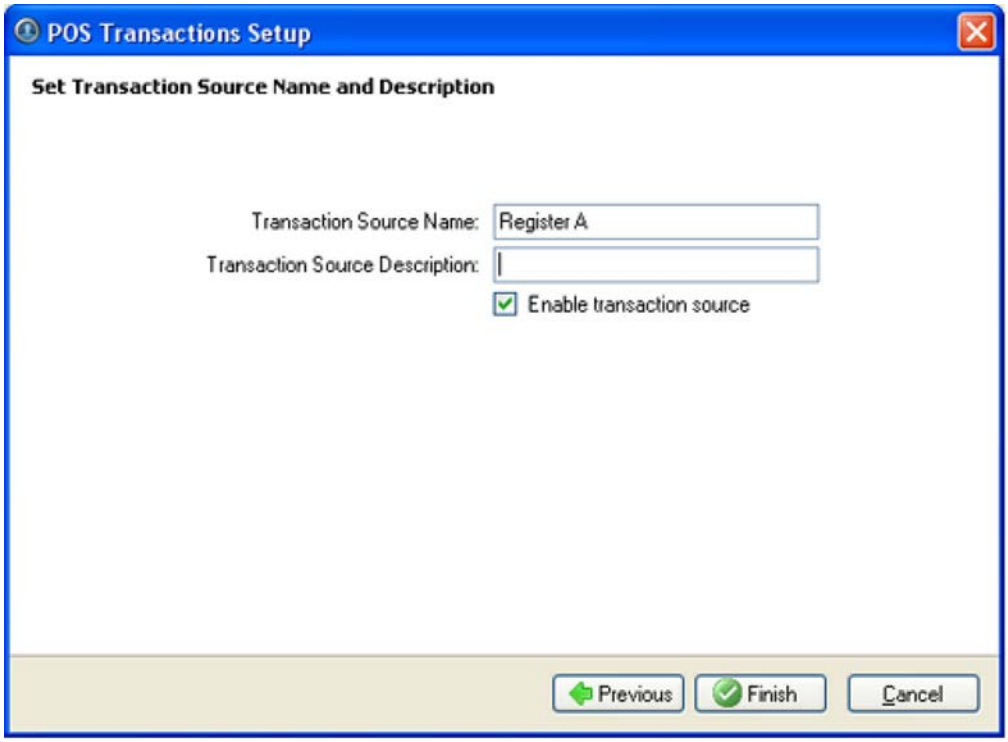

Figure E. Set Transaction Source Name and Description page

9. Click **Finish**.

Adding a Transaction Source Data Format

When you add a new POS transaction source, be aware that the transaction source must have a source data format.

In the POS Transaction Setup wizard, click **Add** when you arrive on the Set Transaction Source Data Format page. When the Configure Data Format dialog box appears, complete the following procedure:

1. In the Properties area, specify the following:

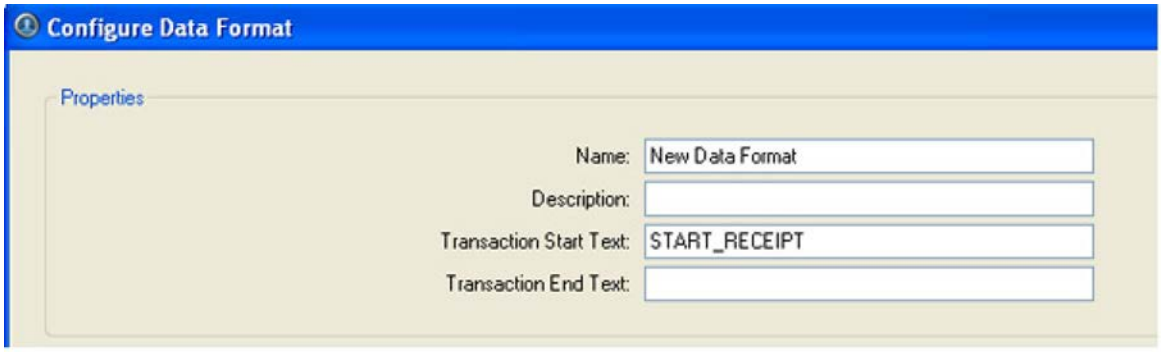

Figure A. Configure Data Format dialog box

- **Name:** enter a name for the data format.

- **Description:** enter a description of the data format if required.
- **Transaction Start Text:** (required) enter the text that identifies the start of each transaction from the POS transaction source.
- **Transaction End Text:** (optional) enter the text that identifies the end of each transaction.

2. The two boxes below show raw and filtered transaction data. Perform any of the following:

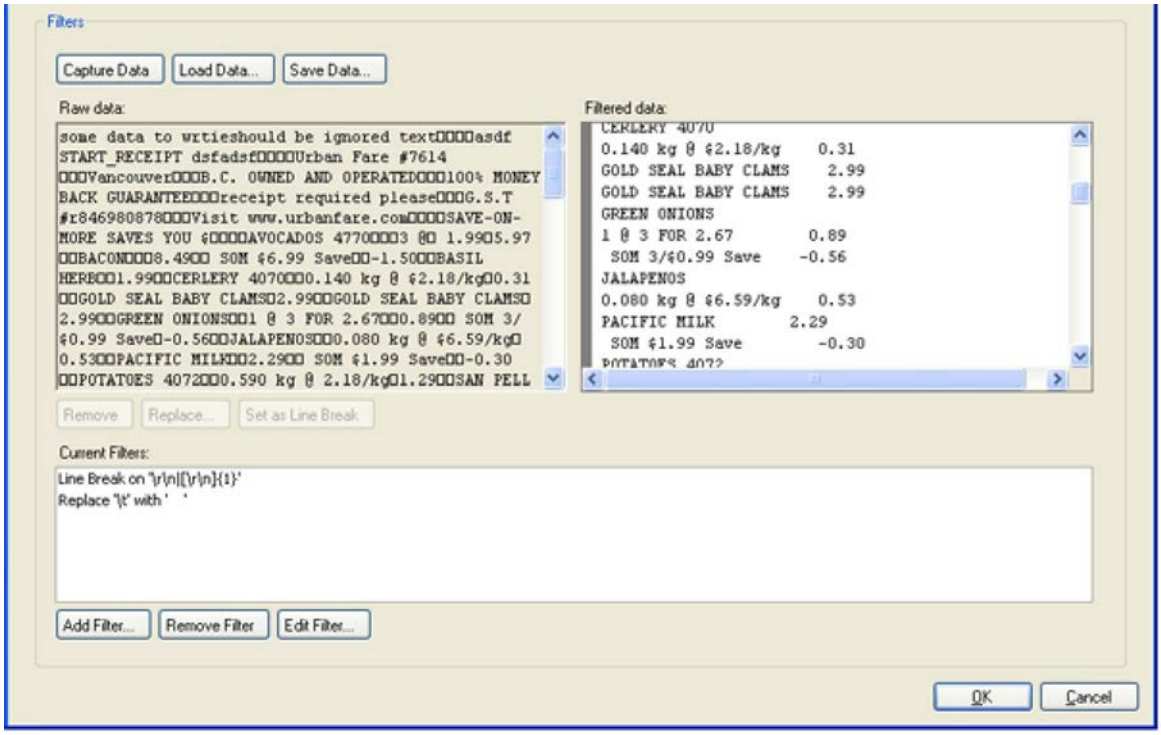

Figure B. Configure Data Format dialog box

- Click **Capture Data** to start capturing a raw transaction data sample.
- Click **Stop Capture** to stop capturing transaction data.
- Click **Load Data** to load raw transaction data from a file.
- Click **Save Data** to save transaction data.

3. (Optional) Click **Add Filter** to create a new filter for the raw transaction data file.

   There are several default filters for line breaks listed in the Current Filters area, if the default filters are sufficient for your needs, skip this step.

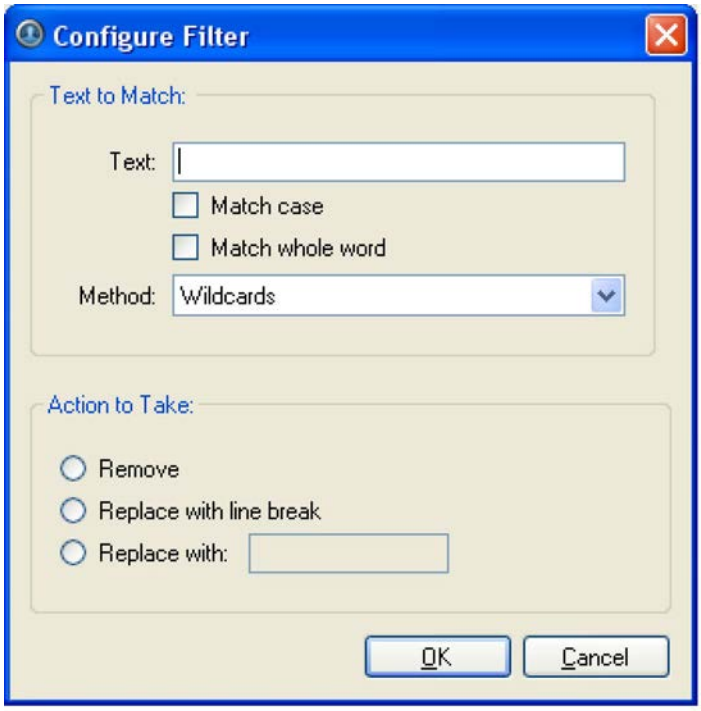

Figure C. Configure Filter dialog box

2.

a. In the **Text** field, enter text for the filter to search for.
b. Select **Match case** and/or **Match whole word** check box to focus the text filter to only find text with the same capitalization or match the text exactly.

c. Select a method from the **Method** drop down list.
d. In the Action to Take area, select which action to take when the filter finds a match to your text criteria.

e. Click **OK**.

3. On the Configure Data Format screen, click **OK** to add the new data format to the data format list.

Adding a Transaction Exception

In the POS Transaction Setup wizard, click **Add** when you arrive on the Set Transaction Exceptions page. When the Configure Exception dialog box appears, complete the following procedure:

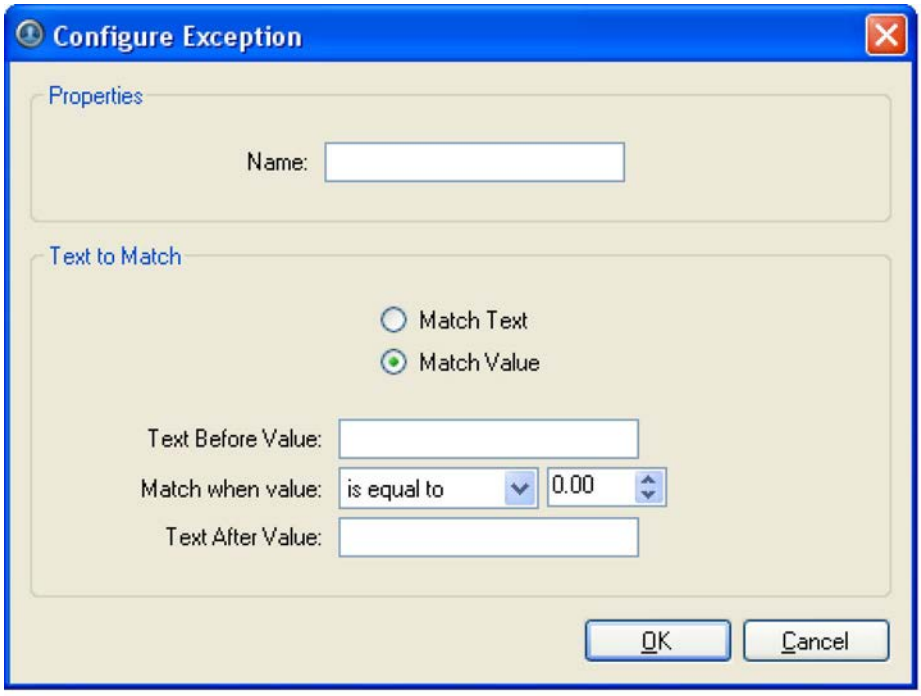

Figure A. Configure Exception dialog box

1. Enter a name.
2. Select one of the Text to Match options:

Select	And do this...
Match Text	Enter text for the exception to search for. The exception will search for instances that are an exact match to the text entered in the **Text to Match** field.
Match Value	Enter the value that triggers the exception, and enter the text that may appear around the value. The exception will search for values that match the values you enter in the **Text Before Value**, **Match When Value** and **Text After Value** fields

3. Click **OK.**

Editing and Deleting a POS Transaction Source

1. Right-click a server in the System Explorer and select **Setup** to open the server Setup dialog box. See Accessing the Server Setup for more information.
2. Click **POS Transactions**.

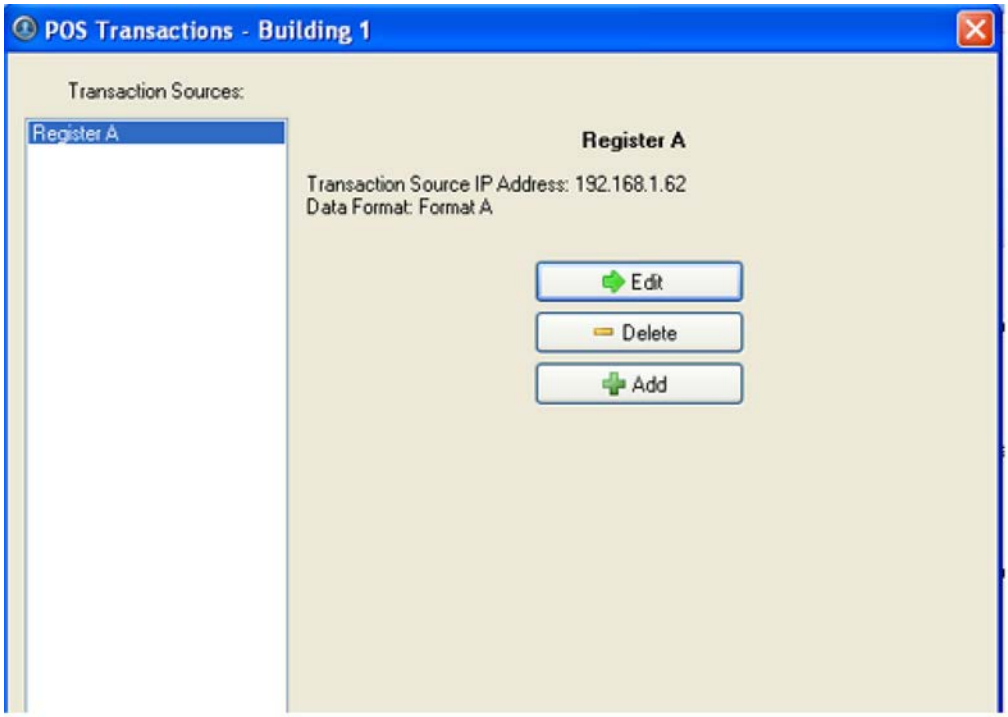

Figure A. POS Transactions dialog box

3. In the POS Transaction dialog box, select a POS transaction source then perform one of the following:
    - Click **Edit** to edit the POS transaction source. Go through the POS Transaction Setup wizard and make the required changes on each page. On the last page, click **Finish**. Refer to Adding a POS Transaction Source for details about the editable options.
    - Click **Delete** to delete the POS transaction source. When the confirmation dialog box appears, click **OK**.

Email Notification

Use the Email Notification dialog box to prepare the server for sending email messages in response to events. You can configure what events require email notification and who receives the emails.

Setting Up the Email Server

Before emails can be sent, the server must be set up to send emails.

1. Right-click a server in the System Explorer and select **Setup** to open the server Setup dialog box. See Accessing the Server Setup for more information.
2. Click **Email Notification**.
3. In the Email Notification dialog box, select the Email Server tab.

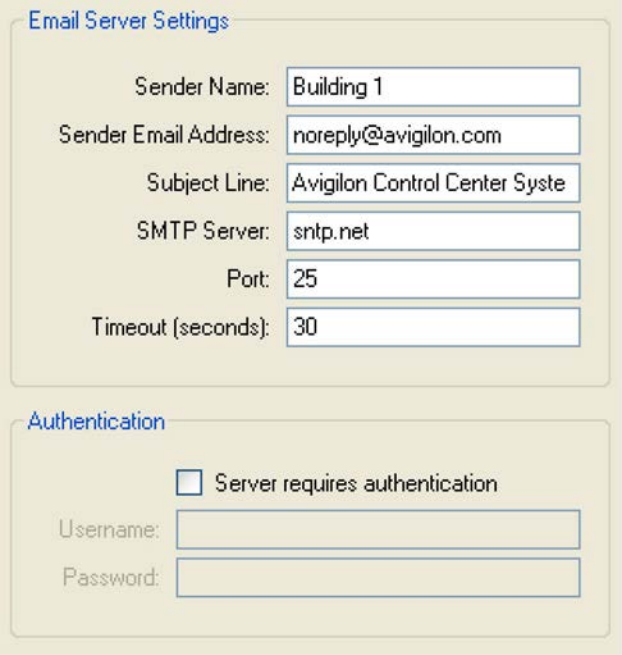

Figure A. Email Notifications dialog box: Email Server tab

4. In the Email Server Settings area, specify the following
    a. **Sender Name:** enter a name to represent the server sending out the email.
    b. **Sender Email Address:** enter an email address the server can use to send emails.
    c. **Subject Line:** enter a default subject line for all emails sent from this server.
    d. **SMTP Server:** enter the SMTP server address used by the server's email.
    e. **Port:** enter the SMTP port.
    f. **Timeout (seconds):** enter the maximum number of seconds the server will attempt to send the email before it stops.
5. (Optional) In the **Authentication** area, select the **Server requires authentication** check box.
    a. Enter the server **Username** and **Password**.
6. Click **OK**.

Configuring Email Notification

In the Email Notification dialog box, you can create email notification groups to specify who will receive email notifications when an event occurs.

1. Right-click a server in the System Explorer and select **Setup** to open the server Setup dialog box. See Accessing the Server Setup for more information.
2. Click **Email Notification**.

3. In the Email Notification dialog box, ensure the Email Notification tab is selected.
4. Click **Add**.

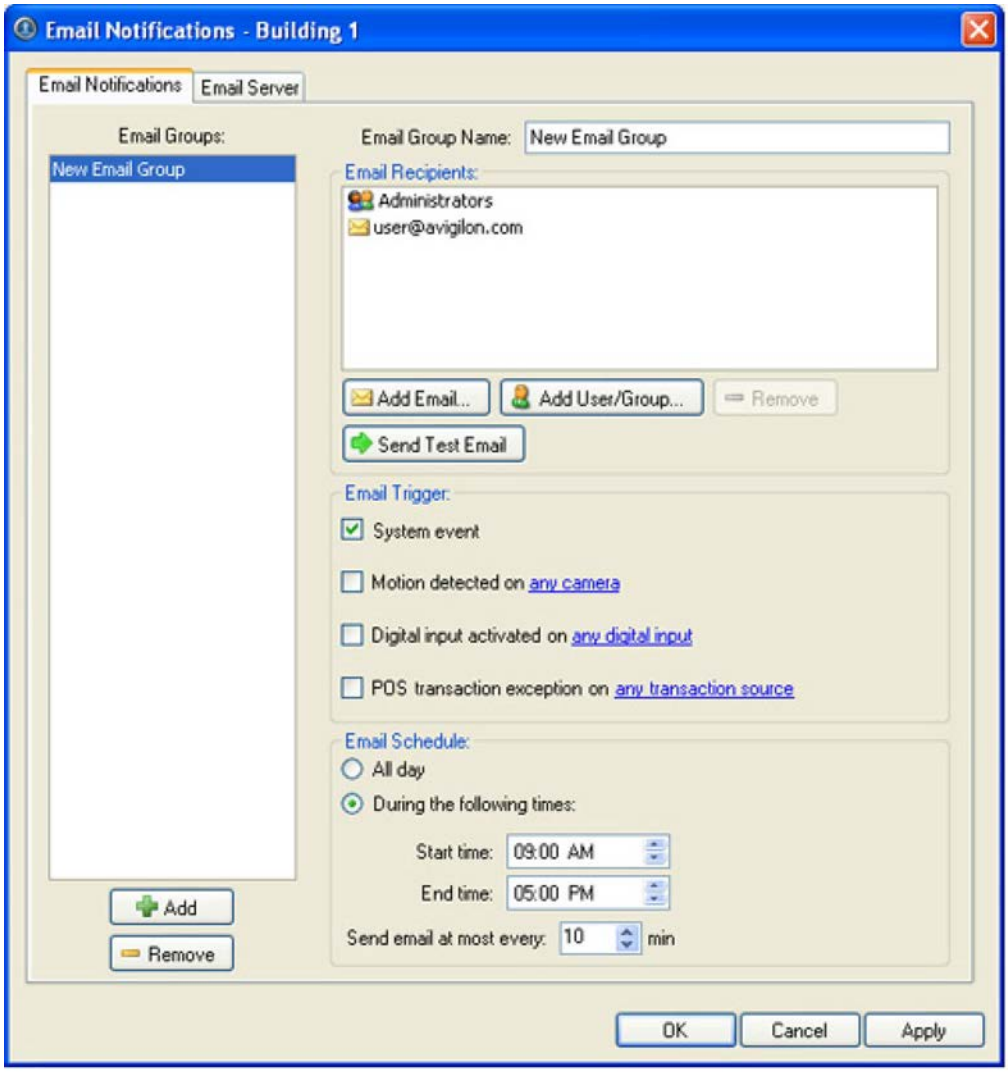

Figure A. Email Notifications dialog box

5. Enter a name for the new email group.
6. In the Email Recipients area, add all the users, groups and emails that are part of this email group. Perform any of the following:
   - Click **Add User/Group** to add an Avigilon Control Center user or access group. In the dialog box, select all the required users and groups then click **OK**.
   - Click **Add Email** to add individual emails. In the dialog box, enter the email address then click **OK**.

   Tip: Ensure the Avigilon users and groups added to the Email Recipient list have a valid email in their user profile.

7. Click **Send Test Email** to send a test email to everyone on the Email Recipients list.
8. In the Email Trigger area, select all the events that this email group will be notified of. Click the blue text to define the event requirements.

   If you require other events or more specific requirements, you can also configure email notification in the rules engine. See Rules for more information.
9. In the Email Schedule area, select when emails are sent.
   - Select **All day** to send email notifications whenever events occur.
   - Select **During the following times** to send email notifications only during the specified time range. You can limit the number of emails sent by setting the time interval between each email.
10. Click **OK**.

Editing and Deleting an Email Notification

You can edit the details of an email notification or delete the email notification when it is no longer required.

1. Right-click a server in the System Explorer and select **Setup** to open the server Setup dialog box. See Accessing the Server Setup for more information.
2. Click **Email Notification**.
3. In the Email Notification dialog box, ensure the Email Notification tab is selected then perform one of the following:
   - To edit the email notification, select the Email Group and make the required changes, then click **OK**. Refer to Configuring Email Notification for details about the editable options.
   - To delete the email notification, select the Email Group and click **Remove**.

Rules

The rules engine allows you to trigger specific actions when certain events occur.

For example, starting a live stream when a digital input is triggered, or sending an email to an administrator when a camera is disconnected.

Adding a Rule

1. Right-click a server in the System Explorer and select **Setup** to open the server Setup dialog box. See Accessing the Server Setup for more information.

2. Click **Rules**.
3. In the Rules dialog box, click **Add**.
4. Select the events that will trigger the rule. If blue underlined text appear in the rule description, click on the link to further define the event.

   For example, in the image below, you can define the specific camera that triggers the **connection has failed** rule by clicking the blue link.

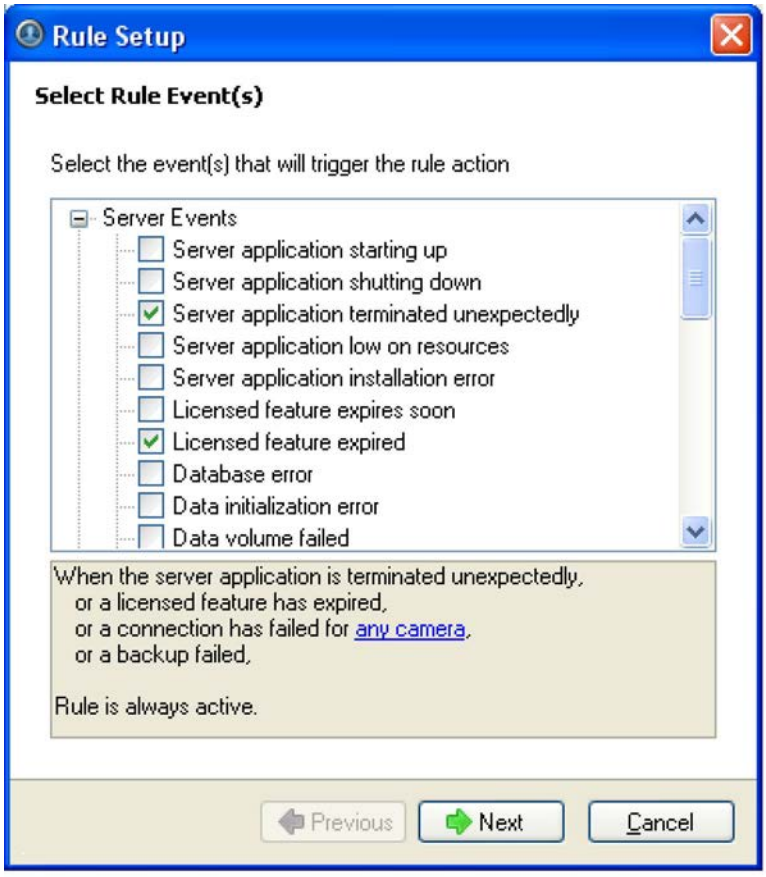

Figure A. Select Rule Event(s) page

5. When the trigger event is defined, click **Next**.
6. Select the actions that will occur when the rule is triggered. If any blue underlined text appear in the rule description, click on the link to further define the action. When the action is defined, click **Next**.

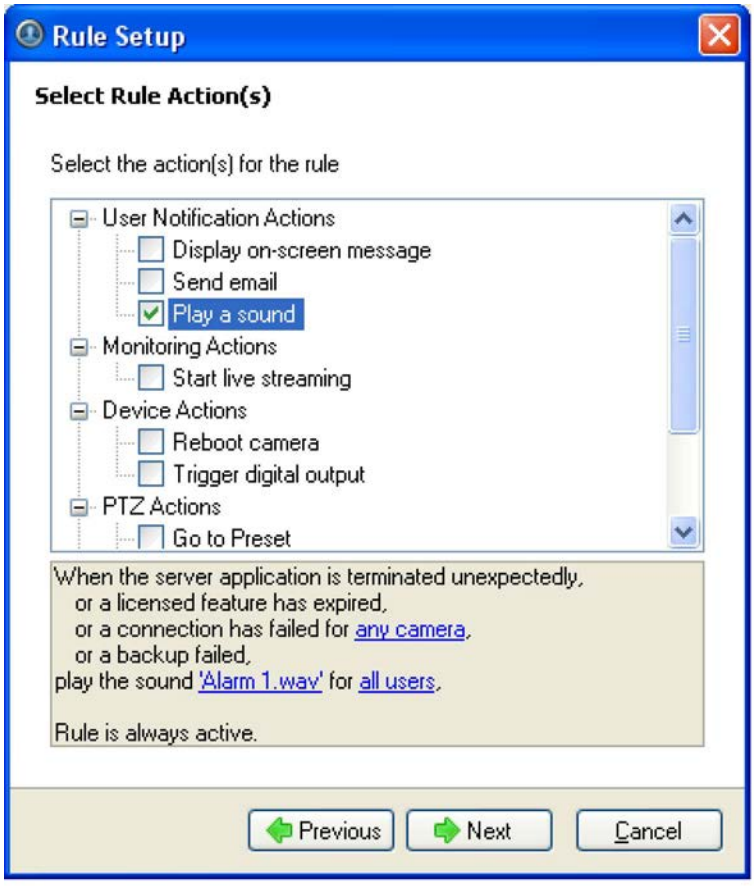

Figure B. Select Rule Action(s) page

7. Select when the rule should be active then click **Next**.

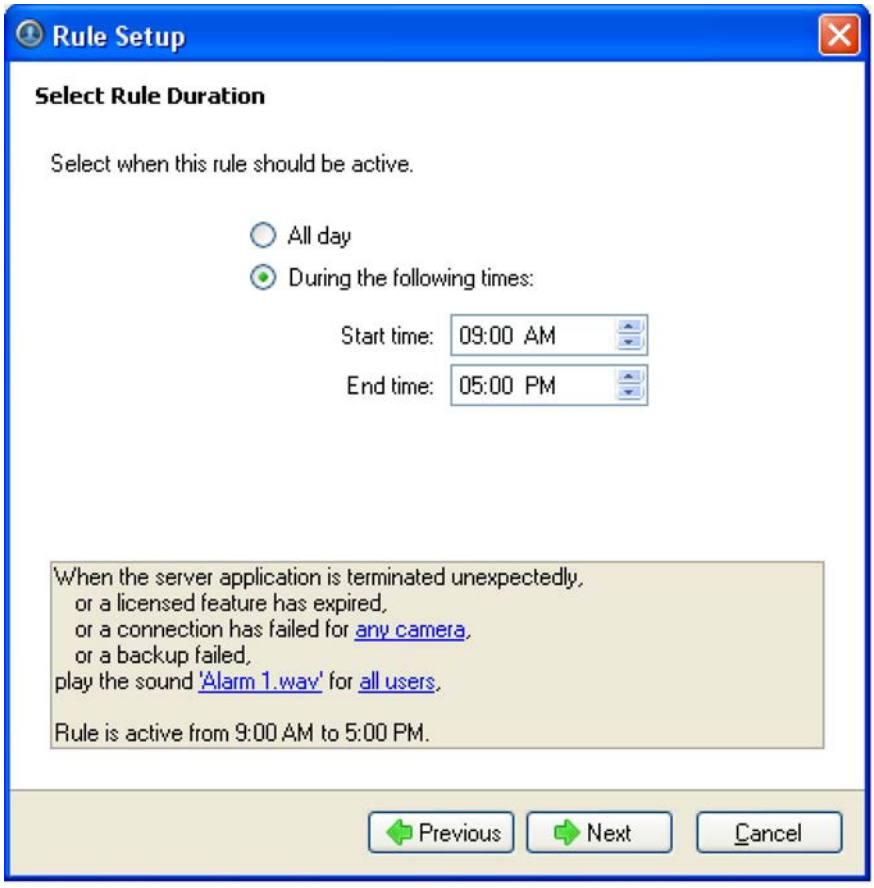

Figure C. Select Rule Duration page

8. Give the rule a name and description. Ensure the **Rule is enabled** check box is selected to enable the rule.

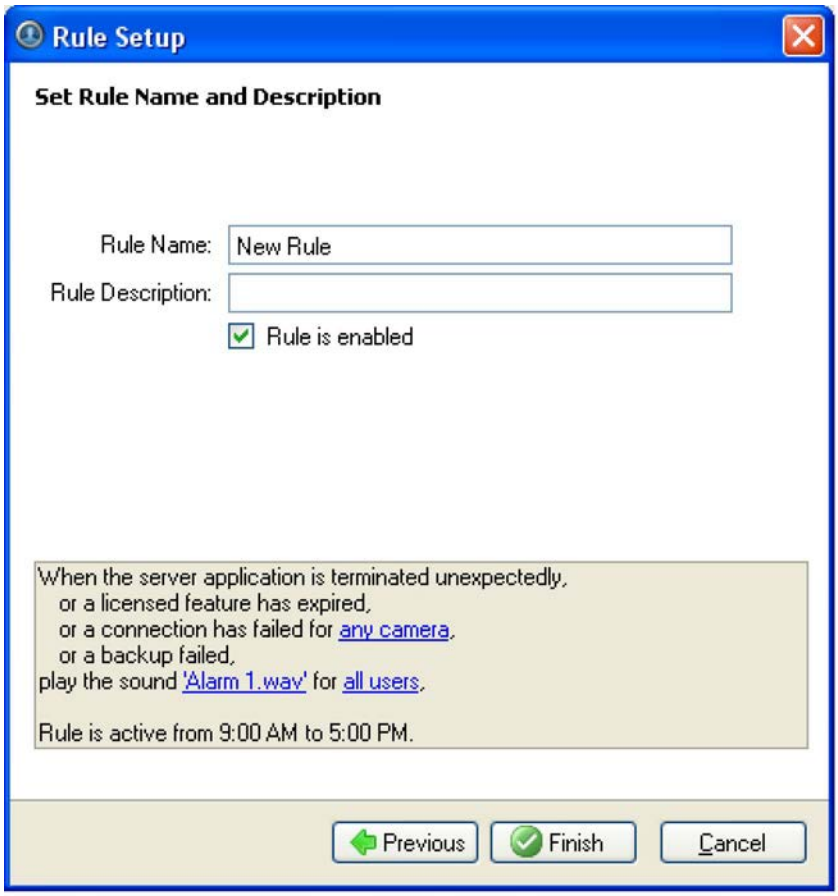

Figure D. Set Rule Name and Description page

9. Click **Finish**.

Editing and Deleting a Rule

1. Right-click a server in the System Explorer and select **Setup** to open the server Setup dialog box. See Accessing the Server Setup for more information.
2. Click **Rules**.
3. In the Rules dialog box, select a rule and perform one of the following:

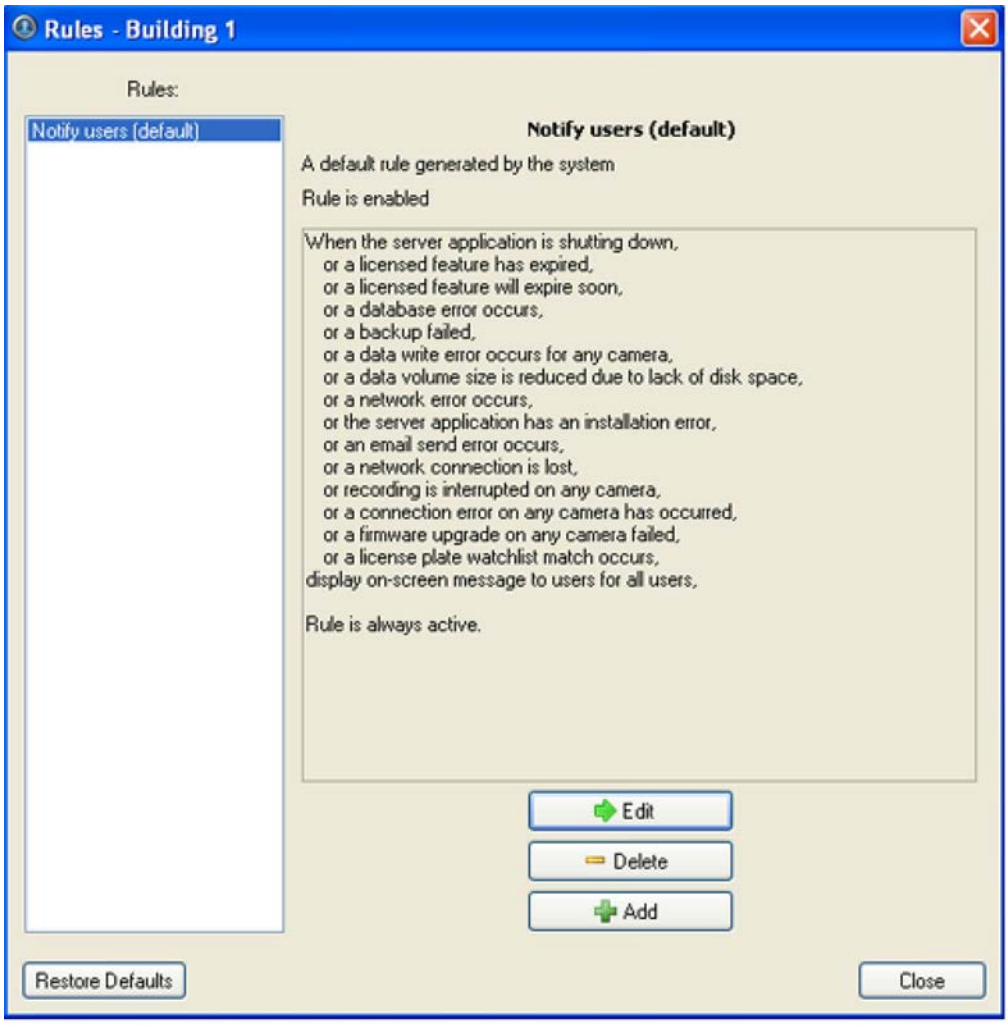

Figure A. Rules dialog box

- Click **Edit** to edit the rule. Go through the Rules Setup wizard and make the required changes on each page. On the last page, click **Finish**. Refer to Adding a Rule for details about the editable options.
- To delete a rule, click **Delete**. When the confirmation dialog box appears, click **OK**.

System Log

The system log records events that occur in the Avigilon Control Center system. This can be useful for tracking system usage and diagnosing issues.

You can filter the items displayed in the log and save the log to a separate file for sending to Avigilon support.

Note: The system log maintains a record of system events for up to 90 days.

Viewing the System Log

1. Right-click a server in the System Explorer and select **Setup** to open the server Setup dialog box. See Accessing the Server Setup for more information.
2. Click **System Log**.
3. In the System Log dialog box, select the log events you want to display in the Event Types to Show area, then click **Start Search**.

   The search results are displayed in the left pane.

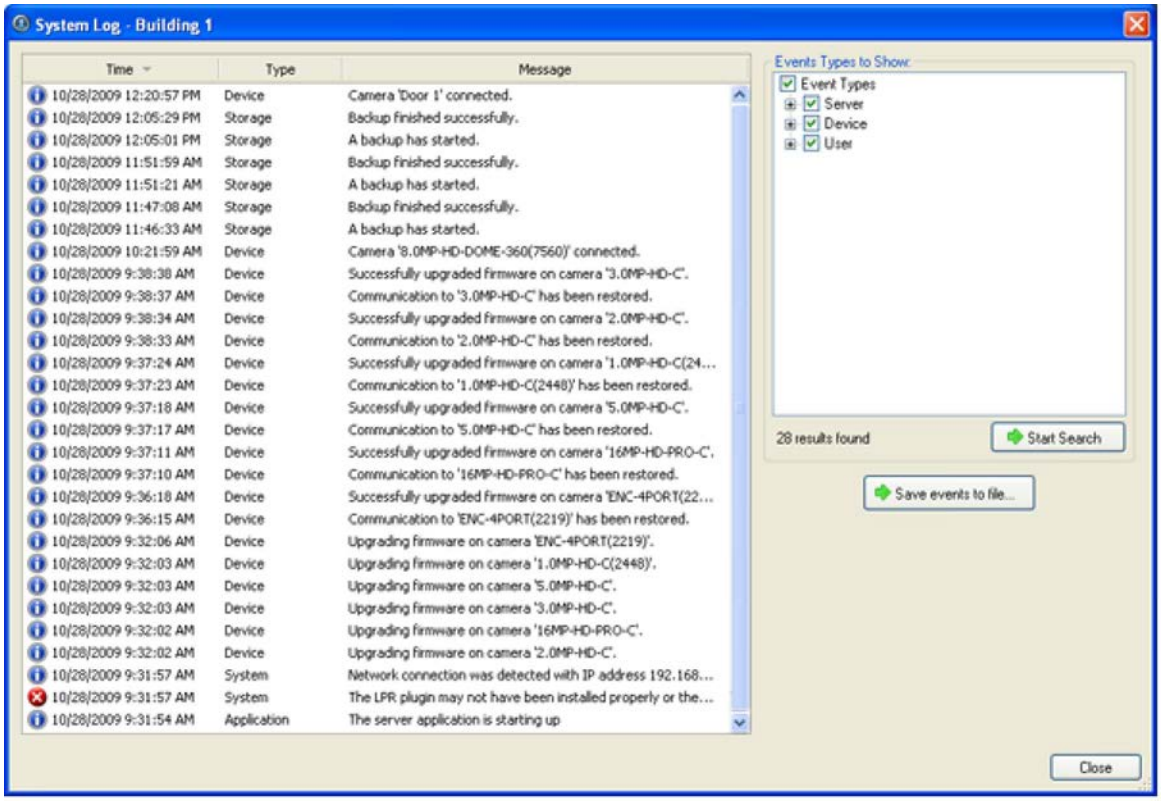

Figure A. System Log dialog box

4. Select a result to display the event details.
5. To save the log search results, click **Save events to file...** and save the file.
6. Click **Close**.

License Plate Recognition

License Plate Recognition is a licensed feature that allows users to read and store vehicle license plate numbers from any image streamed through the Avigilon Control Center Server software.

The License Plate Recognition options will only appear if you have the feature licensed and installed on the server.

Setting Up License Plate Recognition

1. Right-click a server in the System Explorer and select **Setup** to open the server Setup dialog box. See Accessing the Server Setup for more information.
2. Click **License Plate Recognition**.
3. When the License Plate Recognition dialog box appears, select a lane from the left pane.

   The number of lanes listed is determined by the number of LPR channels licensed on the server.

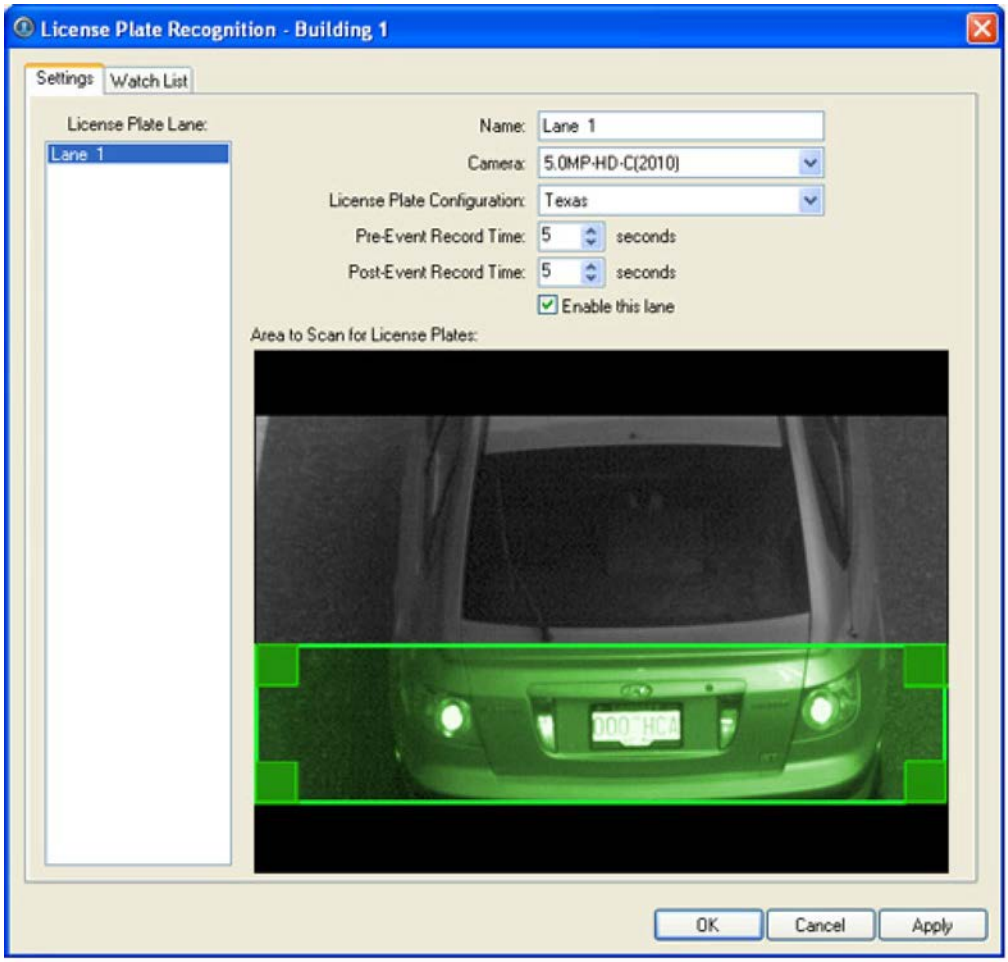

Figure A. License Plate Recognition dialog box, Settings tab

4. Complete the following fields:
   - **Name:** enter a name for the lane.
   - **Camera:** select the camera that will perform the license plate recognition. One camera can be used for multiple lanes.

- **License Plate Configuration:** select the regional license plate format that needs to be recognized by the camera.
- **Pre-Event Record Time:** enter the amount of time the camera should record before the license plate is recognized.
- **Post-Event Record Time:** enter the amount of time the camera should record after the license plate is recognized.
- **Enable this lane:** select this check box to enable the License Plate Recognition feature on this lane.

5. Move and adjust the size of the green overlay to define the area where license plates are detected by the camera.

   Note: The maximum size of the license plate recognition area is one megapixel. The green overlay automatically adjusts itself to meet the size limits.

6. Click **OK**.

Configuring the Watch List

The License Plate Recognition Watch List identifies license plates that may be of special interest. When a license plate on the Watch List is detected, an event is generated to notify the user and can be used to trigger a specific action in the Rules engine.

You can manually add each license plate that needs to be recognized, or import a list of licenses into the Client software.

Adding Licenses to the Watch List

1. Right-click a server in the System Explorer and select **Setup** to open the server Setup dialog box. See Accessing the Server Setup for more information.
2. Click **License Plate Recognition**.
3. When the License Plate Recognition dialog box appears, select the Watch List tab.

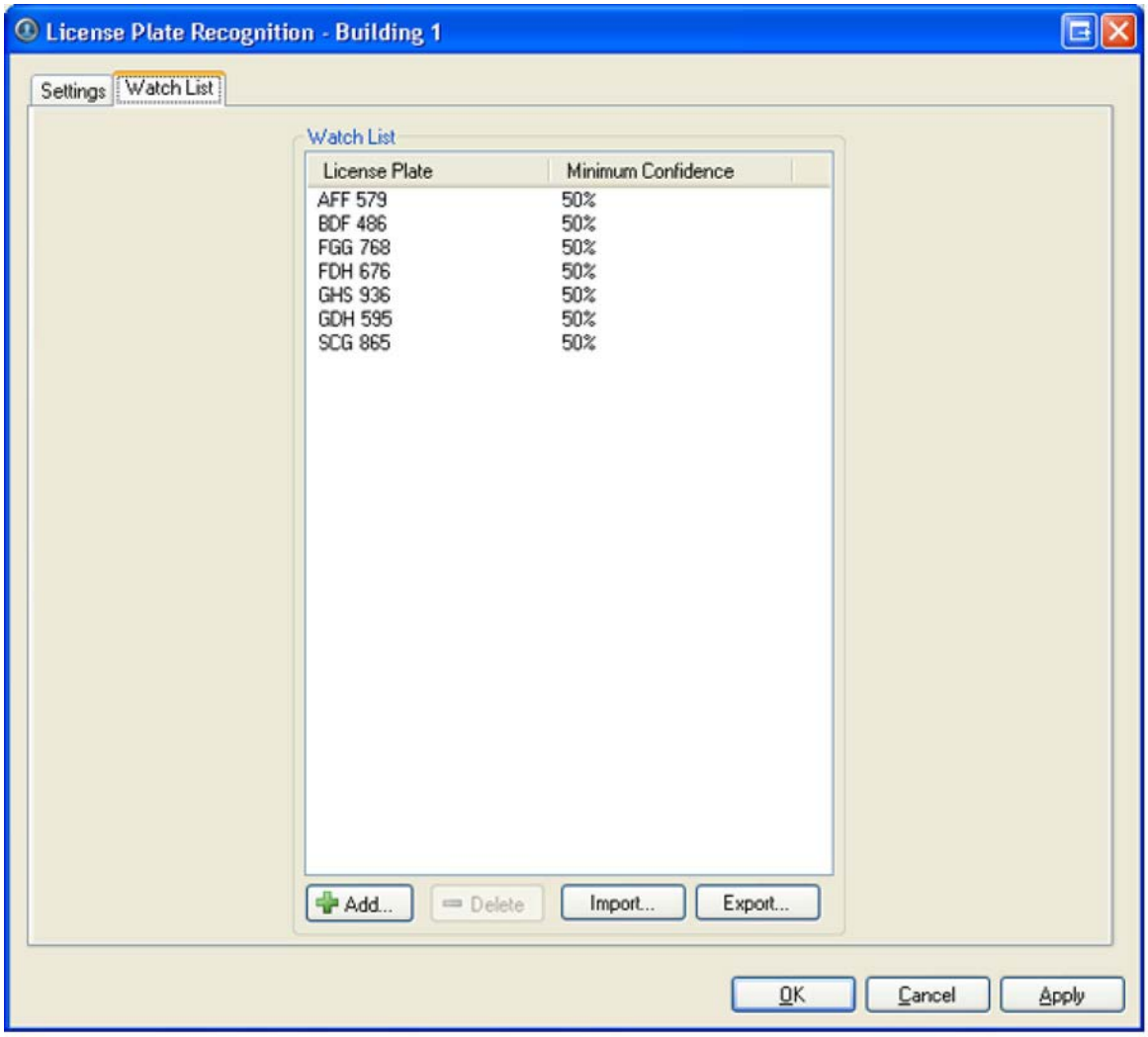

Figure A. License Plate Recognition dialog box: Watch List tab

4. Click **Add**. The Add License Plate dialog box appears.

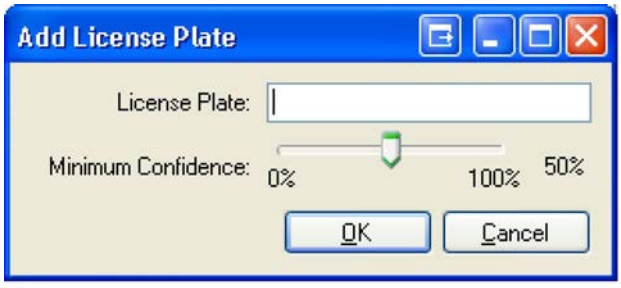

Figure B. Add License Plate dialog box

5. Enter the license plate number.
6. Move the **Minimum Confidence** slider to determine how similar the detected license plates must be before it is considered a match.

For example, if a license plate on your watch list is ABC 123 and Avigilon detects an ABC 789 license plate, the system will be 50% confident that it has found a match. If the system detects ABC 129, it will be 83% confident that it has found a match.

7. Click **OK**.

Deleting a License Plate from the Watch List

1. In the License Plate Recognition dialog box, select the Watch List tab.
2. Select the license from the Watch List, and click **Delete**.

Exporting a Watch List

1. In the License Plate Recognition dialog box, select the Watch List tab.
2. Click **Export**.
3. In the Save As dialog box, name the file and click **Save**.

The Watch List can be exported as a text file or a comma-separated values (CSV) file.

Importing a Watch List

1. In the License Plate Recognition dialog box, select the Watch List tab.
2. Click **Import**.
3. In the Import dialog box, locate the Watch List file and click **Open**.

Camera Setup

In the Avigilon Control Center Client software, cameras are pre-configured for optimal image recording. If your surveillance location requires special recording or display settings, you can configure the camera to meet your needs in the camera Setup dialog box.

Note: Some features are not displayed if the server does not have the required license, or if you do not have the user permissions to access the feature.

Note: The dialog box may appear different depending on the camera. Some cameras do not offer the full set of configuration options.

Accessing the Camera Setup

Perform one of the following steps to open the camera Setup dialog box:

- Select **Tools > Setup...** then select the camera you want to setup from the left pane.

- In the System Explorer pane, right-click the camera and select **Setup**.

Note: Some features are not displayed if the server does not have the required license, or if you do not have the user permissions to access the feature.

Note: The dialog box may appear different depending on the camera. Some cameras do not offer the full set of configuration options.

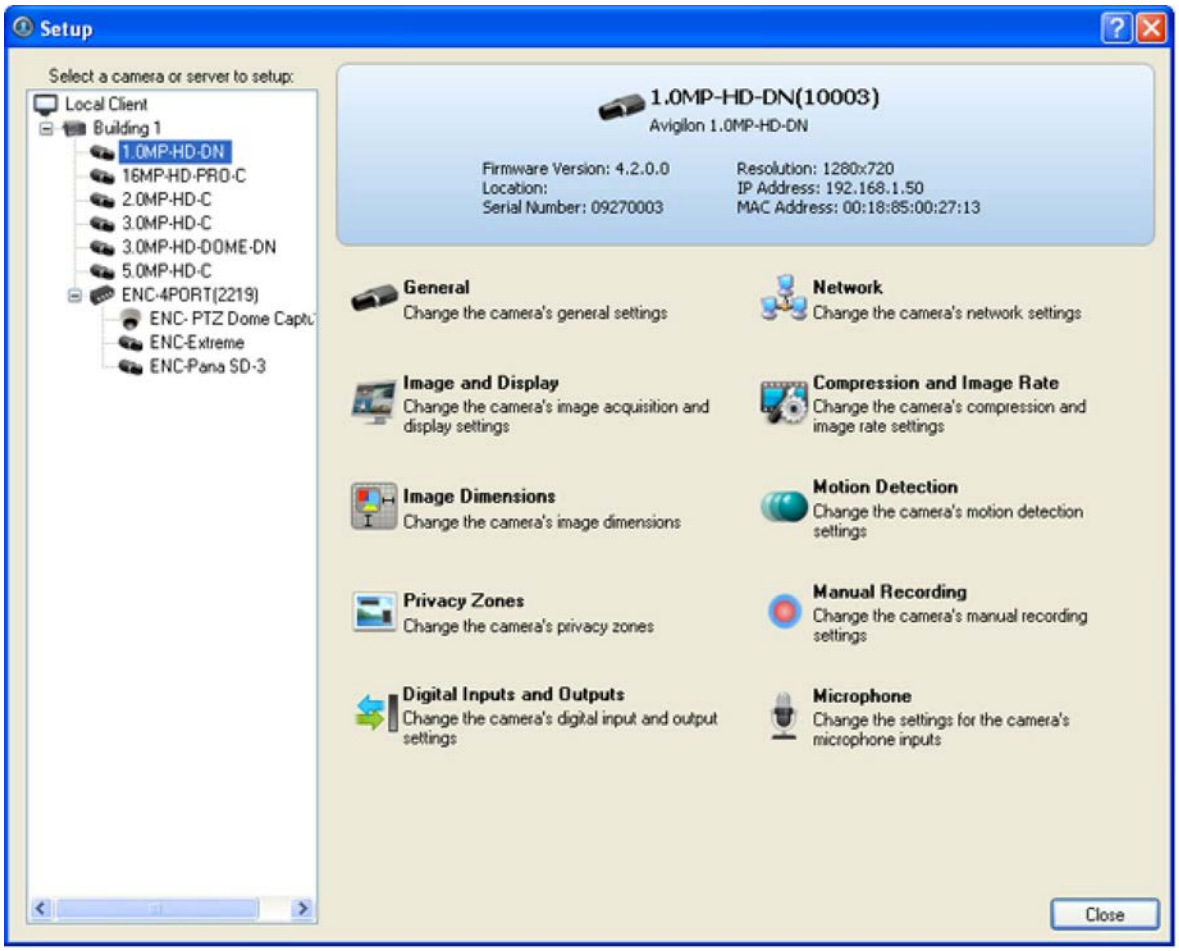

Figure A. Camera Setup dialog box

General

The camera General dialog box allow you to define the camera's name, the camera's location, configure the camera's PTZ settings and disable the camera's status LEDs.

Note: The dialog box may appear different depending on the camera. Some cameras do not offer the full set of configuration options.

Changing General Camera Settings

1. Right-click the camera in the System Explorer and select **Setup** to open the camera Setup dialog box.
   See Accessing the Camera Setup for more information.
2. Click **General**.
3. In the General dialog box, complete the following fields as required:

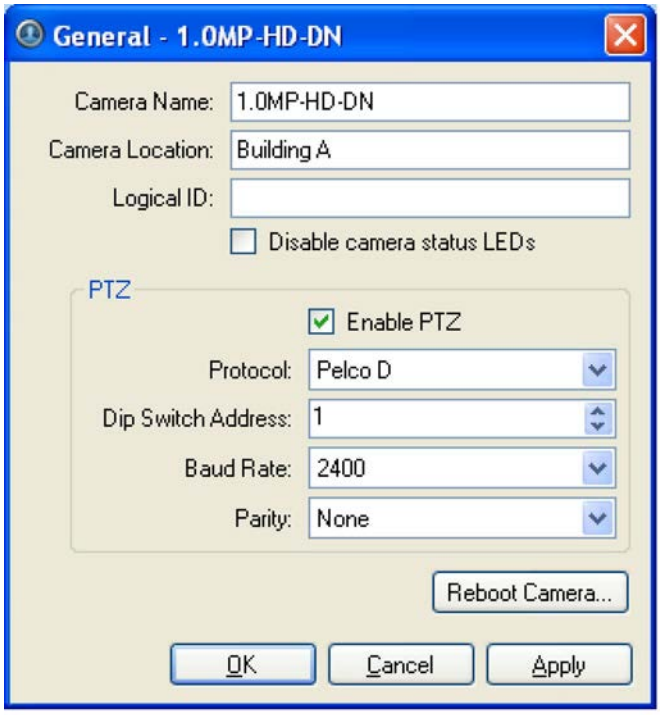

Figure A. General dialog box

- **Camera Name:** enter a camera name. Give the camera a meaningful name to help you identify the camera.
- **Camera Location:** describe the camera's location.
- **Logical ID:** enter a number to allow the Client software to identify this camera.

  The logical ID is used to call up the camera video when using the select camera keyboard command.
- **Disable camera status LEDs:** select this check box to disable the LEDs located on the back of the camera.
- **Enable PTZ:** select this check box to enable the camera's pan, tilt and zoom (PTZ) functions. The PTZ device is controlled from the RS-485 inputs on the camera.

  Select the appropriate **Protocol**, **Dip Switch Address**, **Baud Rate** and **Parity** settings.

Tip: PTZ enabled cameras are given the dome camera icon in the System Explorer.

4. If required, click **Reboot Camera** to restart the camera.
5. Click **OK**.

Network

Use the camera Network dialog box to modify how a camera connects to the server network, and specify the IP address used by the camera.

Note: The dialog box may appear different depending on the camera. Some cameras do not offer the full set of configuration options.

Changing Camera Network Settings

1. Right-click the camera and select **Setup** to open the camera Setup dialog box.
2. Click **Network**.
3. In the Network dialog box, select the required options and complete the related fields:

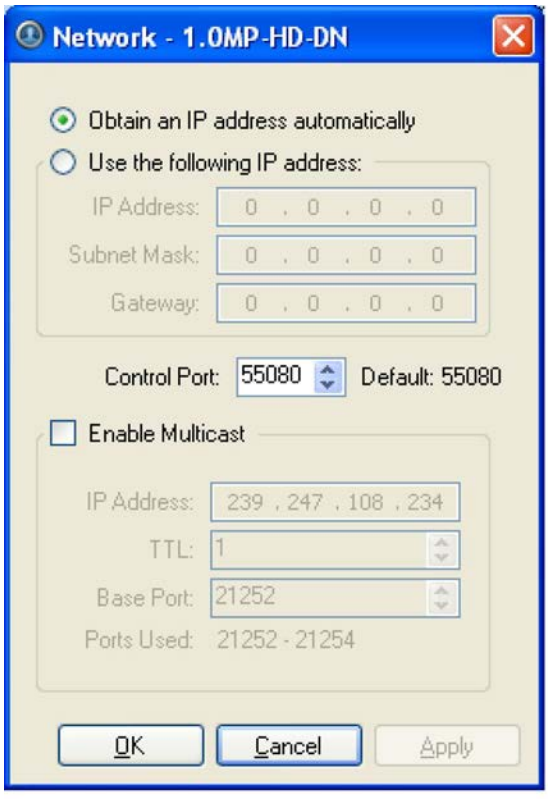

Figure A. Network dialog box

- **Obtain an IP address automatically:** select this option to enable the camera to connect to the network through an automatically assigned IP address.

  The camera will attempt to obtain an address from a DHCP server, if it cannot find one it will default to addresses in the 169.254.x.x range.

- **Use the following IP address:** select this option to enable the camera to connect to the network through a static IP address.

  Enter the **IP Address**, **Subnet Mask** and **Gateway**.

- **Control Port:** select the network port for connecting to the camera. This port is also used for manually discovering cameras on the network.

- **Enable Multicast:** select this check box to enable multicast streaming from the camera. You must enable multicast if you are setting up redundant connections to multiple servers.

  Use the default generated **IP Address**, **TTL** and **Base Port**, or enter your own values.

4. Click **OK**.

Image and Display

Use the Image and Display dialog box to control a camera's display settings for live and recorded images.

Changing Image and Display Settings

Note: The dialog box may appear different depending on the camera. Some cameras do not offer the full set of configuration options.

1. Right-click the camera in the System Explorer and select **Setup** to open the camera Setup dialog box.
   See Accessing the Camera Setup for more information.
2. Click **Image and Display**.
3. In the Image and Display dialog box, make the required changes to adjust the camera's image settings.

   Tip: Use the **Maximum Exposure**, **Maximum Gain** and **Priority** options to control low light behavior.

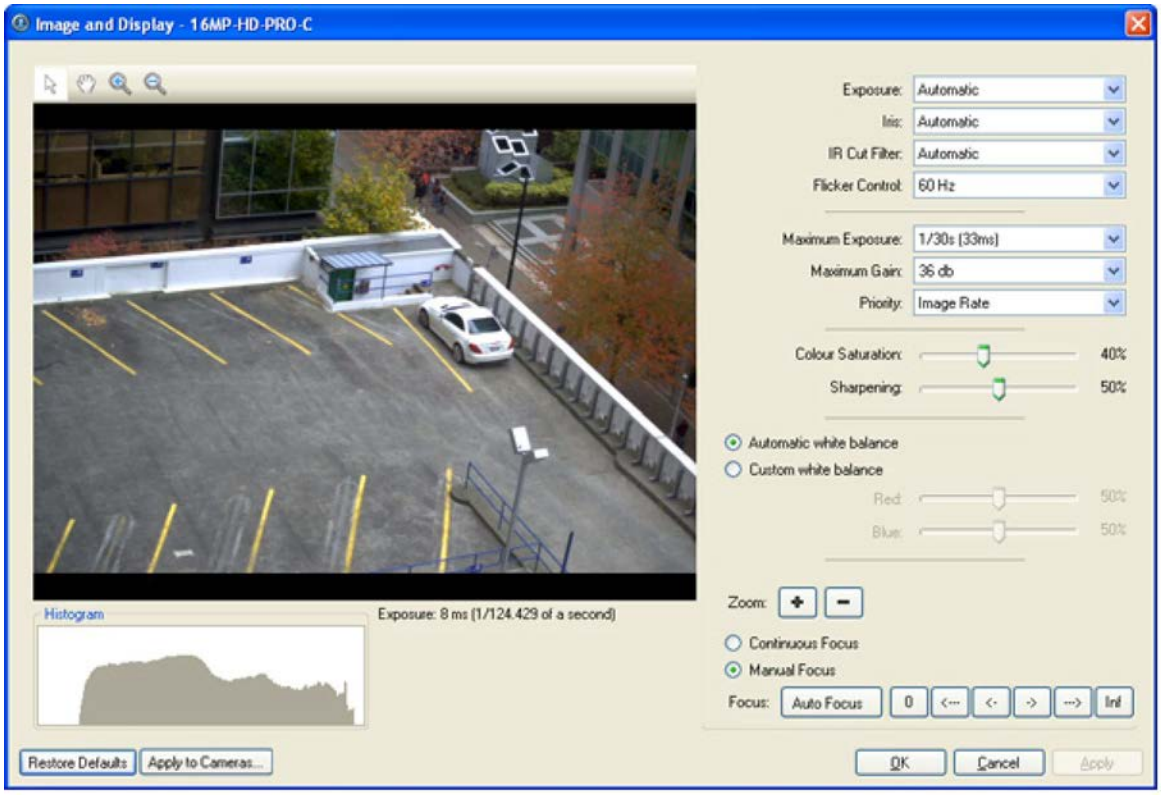

Figure A. Image and Display dialog box

Option	Description
Exposure	You can allow the camera to control the exposure automatically or you can manually set the exposure. ▪ Select **Automatic** for the camera to automatically control the exposure. ▪ Select an exposure rate to manually set the exposure. **Note:** Increasing the manual exposure time may affect the image rate.
Iris	If your camera has a lens with an auto iris, you can allow the camera to control the iris automatically or you can manually set it as open or closed. ▪ From the **Iris** drop down list, select one of the following: ▪ **Automatic** ▪ **Open** ▪ **Close**
IR Cut Filter	If your camera has a removable infrared cut filter, you can allow the camera to control it automatically or you can manually set the camera to color or monochrome mode.

	▪ From the **IR Cut Filter** drop down list, select one of the following: ▪ **Automatic** ▪ **Color** ▪ **Monochrome**
Flicker Control	If your video image flickers because of the fluorescent lights around the camera, you can reduce the effects of the flicker by setting the **Flicker Control** to the same power frequency as your lights. For example, for Europe 50Hz or for North America 60Hz. ▪ In the **Flicker Control** drop down list, select a frequency.
Backlight Compensation	If your scene has small areas of intense light that are causing the overall image to be too dark, backlight compensation can be used to achieve a well exposed image. ▪ Move the **Backlight Compensation** slider until the video image meets your requirements.
Maximum Exposure	You can limit the automatic exposure setting by setting a maximum exposure level. By setting a maximum exposure level for low light situations, you can control the camera's exposure time to let in the maximum amount of light without creating blurry images. ▪ Select an exposure rate from the **Maximum Exposure** drop down list.
Maximum Gain	You can limit the automatic gain setting in the camera by setting a maximum gain level. By setting a maximum gain level for low light situations, you can maximize the detail of an image without creating excessive noise in the images. ▪ Select a gain level from the **Maximum Gain** drop down list.
Priority	You can set **Image Rate** or **Exposure** as the priority. When set to **Image Rate**, the camera will maintain the set image rate as the priority, and will not adjust the exposure beyond what can be recorded for the set Image Rate. See Changing Compression and Image Rate Settings to set the Image Rate. When set to **Exposure** the camera will maintain the exposure setting as the priority, and will override the set image rate to achieve the best image possible. ▪ In the **Priority** drop down list, select either **Image Rate** or **Exposure**.
Saturation	You can adjust the video's color intensity. ▪ Move the **Color Saturation** slider until the video image meets

	your requirements.
Sharpening	If the video image is blurry, you can adjust the video sharpness to make the edges of objects more visible. ▪ Move the **Sharpening** slider until the video image meets your requirements.
White Balance	You can control white balance settings to account for different scene illuminations. ▪ Select one of the following: ▪ **Automatic white balance** ▪ **Custom white balance** Move the corresponding sliders to manually modify the color balance.

4. To focus the camera, see Focusing the Camera Lens.
5. Click **Apply to Cameras...** to apply the same settings to other cameras of the same model.
6. Click **OK**.

Zooming and Focusing the Camera Lens

If you have a camera with a lens capable of electronic zoom and focus, you can zoom or focus the camera through the Avigilon Control Center Client software.

Note: The dialog box may appear different depending on the camera. Some cameras do not offer the full set of configuration options.

1. Right-click the camera in the System Explorer and select **Setup** to open the camera Setup dialog box.
   See Accessing the Camera Setup for more information.
2. Click **Image and Display**. The Image and Display dialog box appears.
3. If the camera has a built-in auto focus feature, you can choose one of the following:
   - **Continuous Focus:** the camera will automatically focus itself whenever the scene changes. Skip the following step.
   - **Manual Focus:** you can manually focus the camera through the Image and Display **Focus** buttons. Once the focus is manually set, it will not change.
4. While you view the camera image panel, complete the following steps to zoom and focus the camera:

Tip: For Avigilon HD Professional cameras, the lens must be set to auto-focus (AF) mode on the camera. If the camera does not detect the lens, the **Focus** buttons are not displayed.

3.

a. Use the **Zoom** buttons to zoom in to the distance you want to focus.

b. In the **Iris** drop down list, select **Open**. When the camera iris is fully open, the depth of field is the shortest.

c. Use the **Focus** buttons until the image becomes clear.

Button	Description
Auto Focus	The camera will automatically focus once.
0	Focused as close to zero as possible
<---	Large step toward zero
<-	Small step toward zero
->	Small step toward infinity
--->	Large step toward infinity
Inf	Infinity

4. Click **Apply to Cameras...** to apply the same settings to other cameras of the same model.

5. Click **OK**.

Compression and Image Rate

Use the camera Compression and Image Rate dialog box to modify the camera's compression and image quality settings for sending image data over the network.

Note: The dialog box may appear different depending on the camera. Some cameras do not offer the full set of configuration options.

Changing Compression and Image Rate Settings

1. Right-click the camera in the System Explorer and select **Setup** to open the camera setup dialog box.

2. Click **Compression and Image Rate**. The Compression and Image Rate dialog box appears.

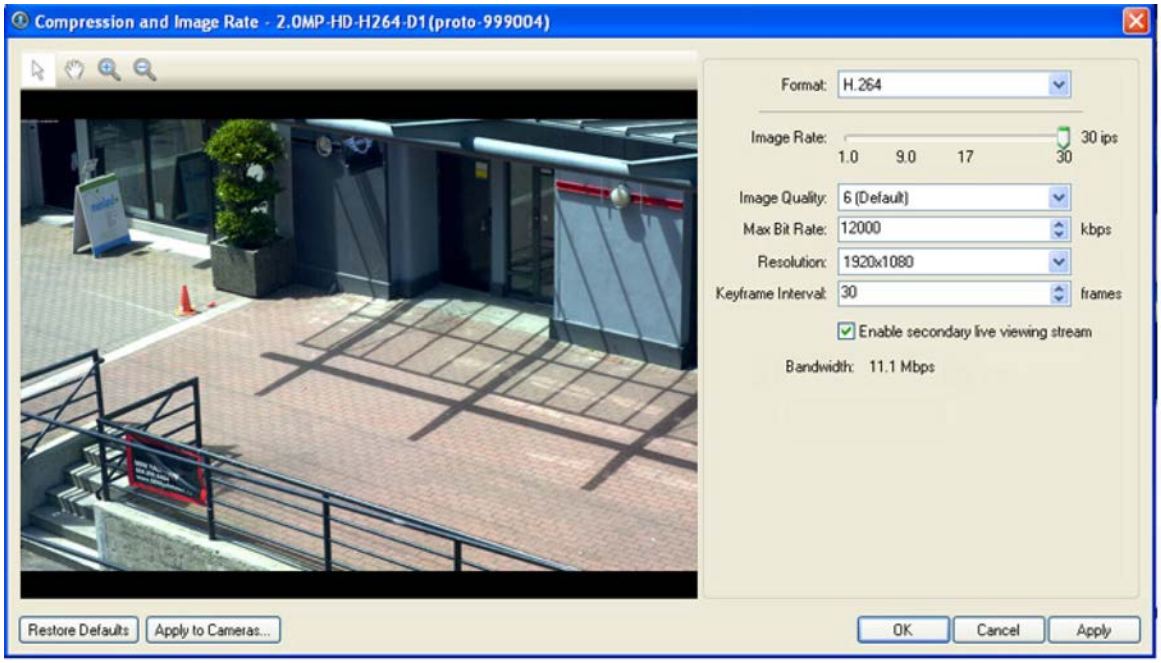

Figure A. Compression and Image Rate dialog box.

The Bandwidth area gives an estimate of the amount of bandwidth the camera would be using given the configured compression and image rate. Adjust the settings as required.

3. In the **Format** drop down list, select the preferred streaming format.

4. In the **Image Rate** bar, move the slider to select the desired image rate.

5. In the **Image Quality** drop down list, select the desired image quality number.

   Image quality setting of 1 will produce the highest quality video and require the most bandwidth.

6. In the **Max Bit Rate** drop down list, select the maximum bandwidth the camera can use.

7. In the **Resolution** drop down list, select the preferred image resolution.

8. In the Keyframe Interval drop down list, select the preferred number of frames between each keyframe.

9. If your camera supports multiple video streams, select the **Enable secondary live viewing stream** check box to enable the secondary stream.

   A secondary video stream allows you to view video at a lower image rate to reduce bandwidth usage, while still recording at a high image rate in the primary stream.

10. Click **Apply to Cameras...** to apply the same settings to other cameras of the same model.
11. Click **OK**.

Image Dimensions

Use the Image Dimension dialog box to set the image dimensions for the camera. This can help reduce bandwidth and increase the maximum image rate.

Changing Image Dimensions Settings

1. Right-click the camera in the System Explorer and select **Setup** to open the camera Setup dialog box.
   See Accessing the Camera Setup for more information.
2. Click **Image Dimensions**.
3. In the Image Dimensions dialog box, adjust the image dimensions by performing one of the following:
   - Drag the edges of the image until you achieve the required size.
   - Change the values for the **Top**, **Left**, **Width**, and **Height** field.

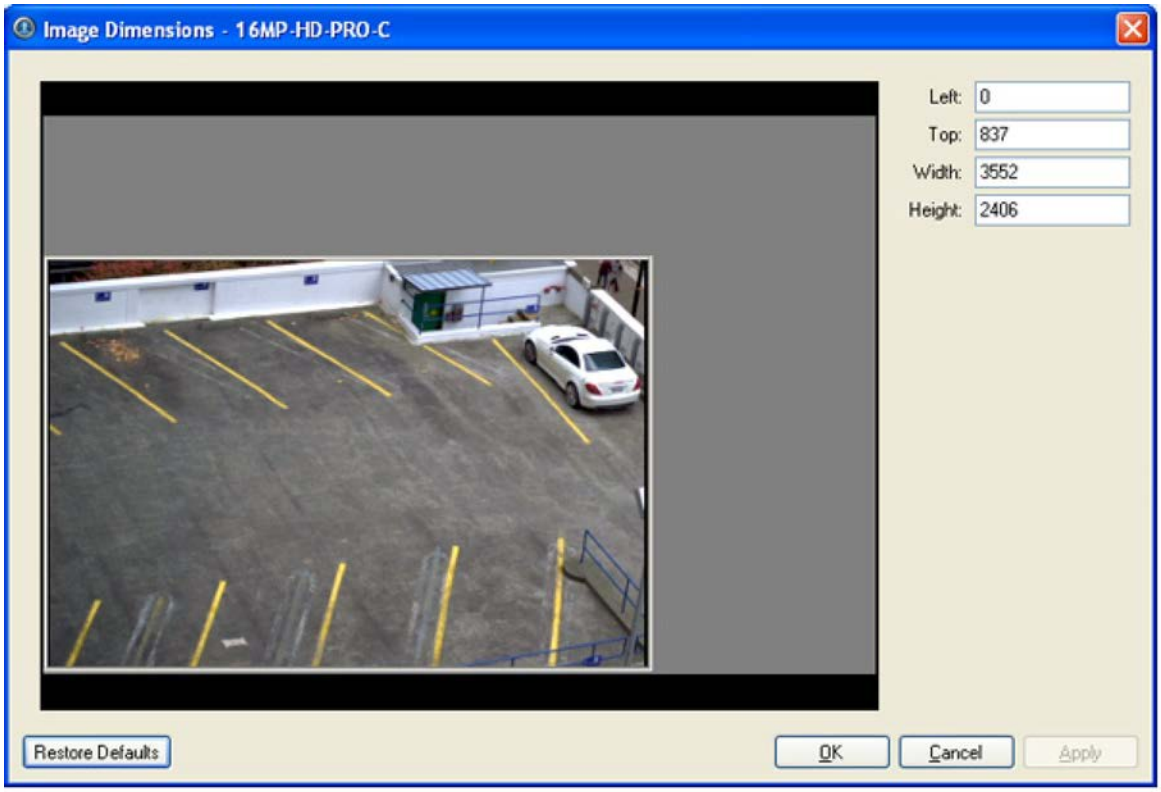

Figure A. Image Dimensions dialog box

4. Click **OK**.

Motion Detection

In the Motion Detection dialog box, you can define specific areas where motion is detected and configure the sensitivity and threshold for motion detection.

Selecting an Area to Detect Motion

In the Motion Detection dialog box, define the green motion detection area of a camera image. Motion detection is ignored in the areas not highlighted in green.

1. Right-click the camera in the System Explorer and select **Setup** to open the camera Setup dialog box.
   See Accessing the Camera Setup for more information.
2. Click **Motion Detection**.
3. In the Motion Detection dialog box, select the buttons above the image panel and use your mouse to define the green motion detection area. The motion detection area must be defined before motion is detected:
   - **Set Area:** select this button then draw green rectangles to define motion detection areas. If necessary, draw multiple rectangles to create your motion detection area.
   - **Clear Area:** select this button and draw rectangles to erase sections from the motion detection area.
   - **Draw:** select this button and manually draw motion detection area. This tool allows you to be very specific and highlight unusual shapes.
   - **Set All:** select this button to highlight the entire image for motion detection.
   - **Clear All:** select this button to clear the image of motion detection areas.

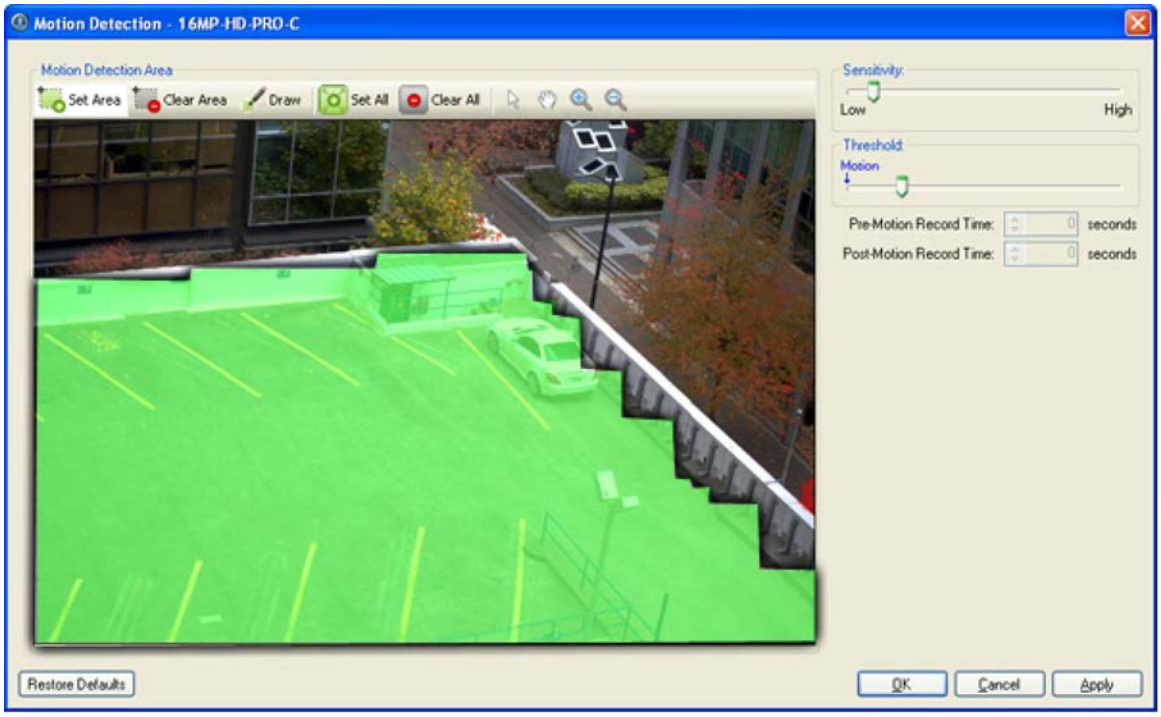

Figure A. Motion Detection dialog box

4. Click **OK**.

To define the sensitivity and threshold for the motion detection area, see Controlling Motion Sensitivity and Threshold.

Controlling Motion Sensitivity and Threshold

In the Motion Detection dialog box, you can control the camera's sensitivity threshold for motion. You can also define how much time should be recorded before and after the motion event.

1. Right-click the camera in the System Explorer and select **Setup** to open the camera Setup dialog box.
   See Accessing the Camera Setup for more information.
2. Click **Motion Detection**. The Motion Detection dialog box appears.
3. Move the **Sensitivity** slider to adjust how much each pixel must change before it is considered in motion.

   The higher the sensitivity, the smaller the amount of pixel change is required before a motion is detected.
4. Move the **Threshold** slider to adjust how many pixels must change before the image is considered to have motion.

   The higher the threshold, the higher the number of pixels must change before the image is considered to have motion.

Tip: The **Motion** indicator above the Threshold slider will move to indicate how much motion is occurring in the current scene.

5. In the **Pre-Motion Record Time** and **Post-Motion Record Time** boxes, specify how much time you want the camera to record before and after the motion event.
6. Click **OK**.

Privacy Zones

You can set privacy zones in the camera's field of view to block out regions of the camera image that you do not want to view or record.

Adding a Privacy Zone

1. Right-click the camera in the System Explorer and select **Setup** to open the camera Setup dialog box.
   See Accessing the Camera Setup for more information.
2. Click **Privacy Zones**.
3. In the Privacy Zones dialog box, click **Add** and a green box will appear on the image.

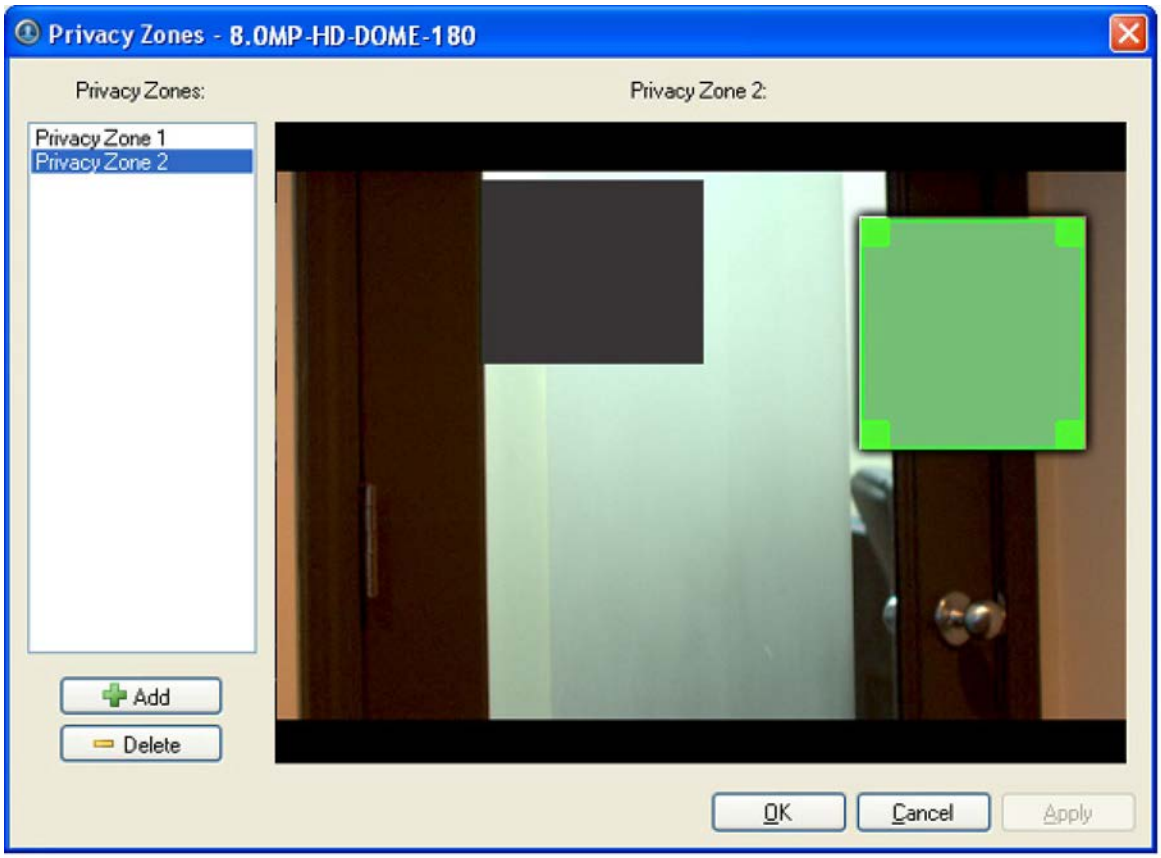

Figure A. Privacy Zones dialog box

4. Move and resize the green box until it covers the area you want to block out.
5. Click **OK**.

Editing and Deleting a Privacy Zone

1. Right-click the camera in the System Explorer and select **Setup** to open the camera Setup dialog box.
   See Accessing the Camera Setup for more information.
2. Click **Privacy Zones**.
3. In the Privacy Zones dialog box, select a privacy zone from Privacy Zone list and perform one of the following:
   - To edit the privacy zone, adjust the green box on the image.
   - To delete the privacy zone, click **Delete**.
4. Click **OK**.

Manual Recording

Manual recording allows you to control video recording outside a camera's recording schedule. Manual recording can only be activated when viewing live camera images. See Triggering Manual Recording for more information.

In the Manual Recording dialog box, you can define the maximum recording duration and the pre-trigger recording time for each camera.

Changing Manual Recording Settings

1. Right-click the camera in the System Explorer and select **Setup** to open the camera Setup dialog box.
   See Accessing the Camera Setup for more information.
2. Click **Manual Recording**. The Manual Recording dialog box appears.

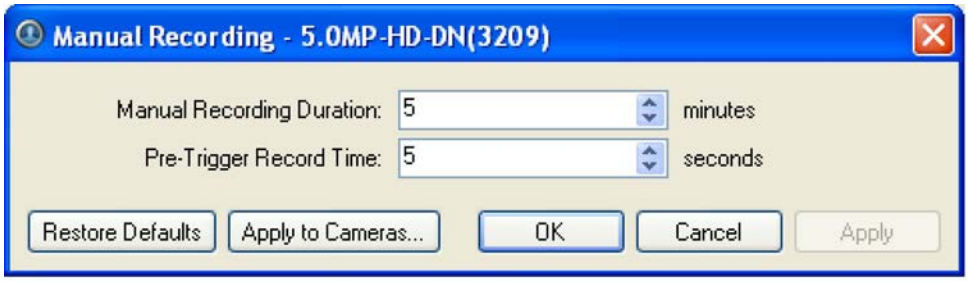

Figure A. Manual Recording dialog box

3. Specify the following:
    - **Manual Recording Duration:** enter the maximum duration of a manual recording if it is not manually stopped.
    - **Pre-Trigger Record Time:** enter the amount of time the camera's images are recorded before manual recording is activated.
4. Click **Apply to Cameras...** to apply the same settings to other cameras of the same model.
5. Click **OK**.

Digital Inputs and Outputs

In the Digital Inputs and Outputs dialog box, set up the external digital inputs and outputs that are connected to the camera.

The external devices can be used to create alarms or trigger recording events and specific actions. Use the rules engine in the server Setup to define the actions that occur in response to the digital inputs and outputs. See Rules for more information.

Setting Up Digital Inputs

1. Right-click the camera in the System Explorer and select **Setup** to open the camera Setup dialog box.
   See Accessing the Camera Setup for more information.
2. Click **Digital Inputs and Outputs**.
3. In the Digital Inputs area, select an input.

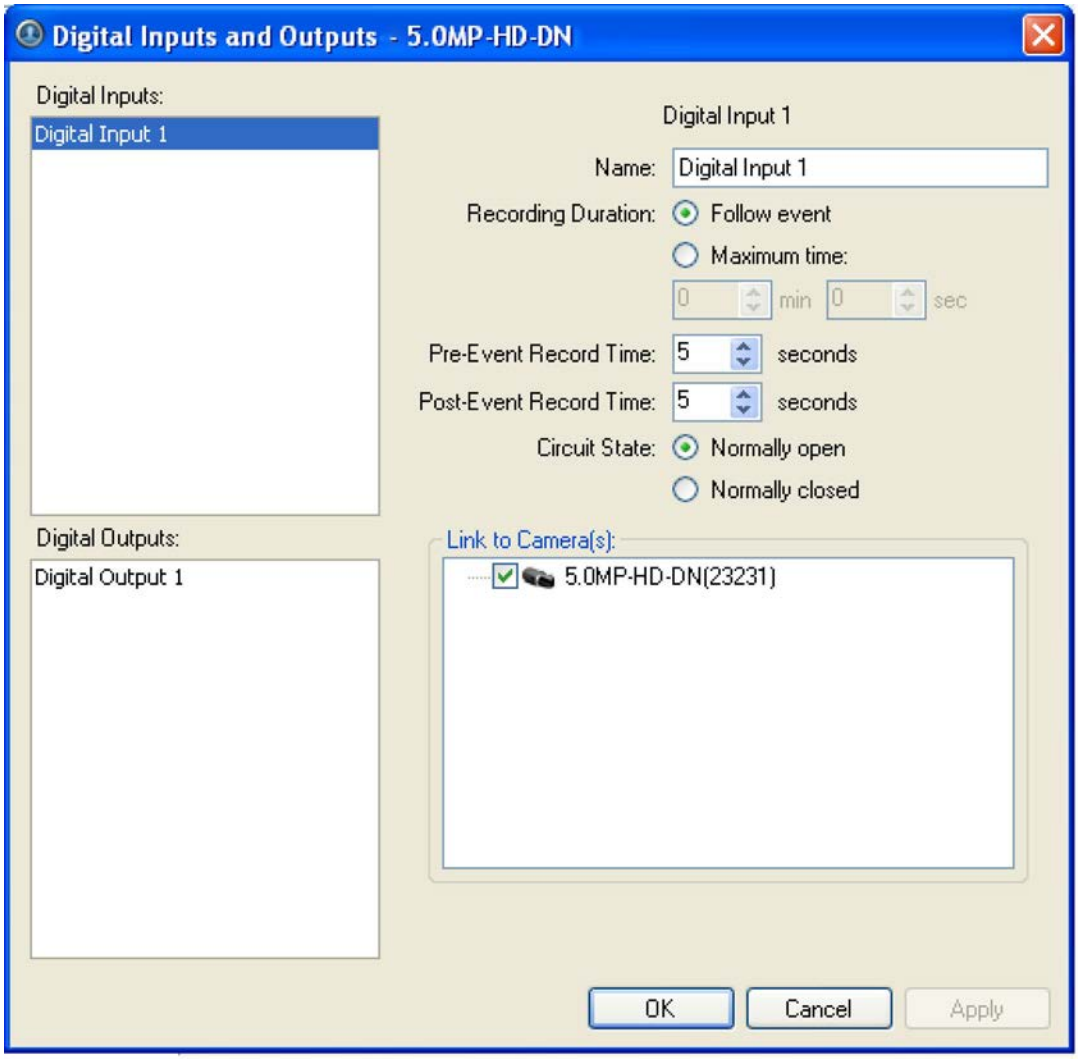

Figure A. Digital Inputs and Outputs dialog box: Digital Inputs Settings

4. Specify the following:
   - **Name:** enter a name to identify the digital input.
   - **Recording Duration:** select **Follow Event** to record the entire digital input event. Or, select **Maximum Time** to limit the recording time.
   - **Pre-Event Record Time:** enter the amount of time to record before the digital input is triggered.
   - **Post-Event Record Time:** enter the amount of time to continue recording after the digital input returns to its normal state.
   - **Circuit State:** select the digital input's default circuit state.
   - **Link to Camera(s):** select the cameras that need to be linked to this input for recording.

If the Recording Schedule is configured to record digital inputs, the cameras selected in the Link to Camera(s) area are used to record this digital input.

5. Click **OK**.

Setting Up Digital Outputs

Note: The dialog box may appear different depending on the camera. Some cameras do not offer the full set of configuration options.

1. Right-click the camera in the System Explorer and select **Setup** to open the camera Setup dialog box.
   See Accessing the Camera Setup for more information.
2. Click **Digital Inputs and Outputs**.
3. In the Digital Outputs area, select an output.

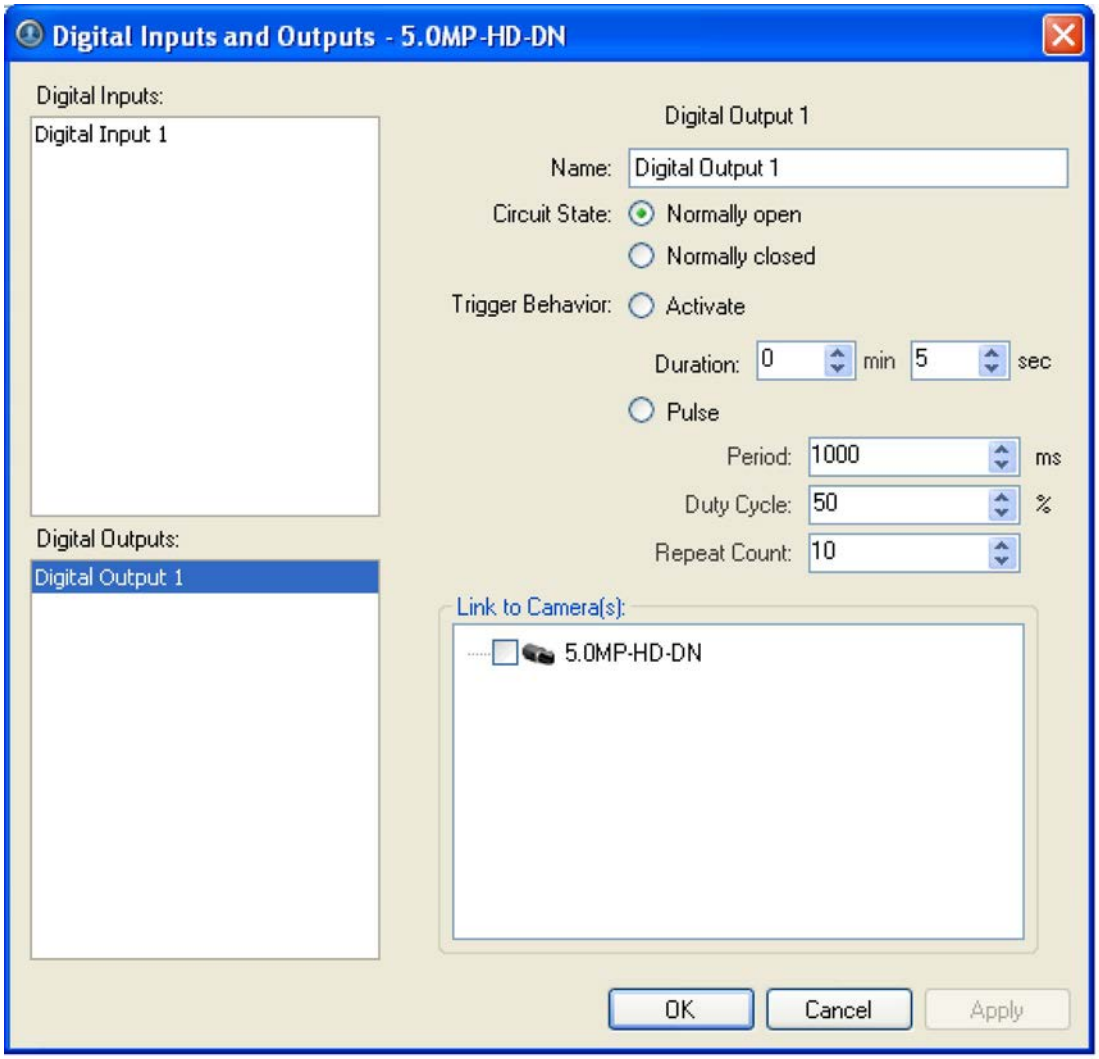

Figure A. Digital Inputs and Outputs dialog box: Digital Output Settings

4. Enter a name to identify the digital output.
5. Select one of the Circuit State options to define the digital output's default circuit state.
6. The Trigger Behavior options define what occurs when the output activated.
    - Select **Activate** to enable the digital output in continuous mode. The **Duration** fields allow you to specify how long the digital output should be active for.
    - Select **Pulse** to enable the digital output in pulse mode. Specify the **Period**, **Duty Cycle**, and **Repeat Count** for the pulse.
7. Select the cameras this digital output should be linked to.

    When you view the live video from the selected cameras, you can manually trigger this digital output. See Triggering Digital Output for more information.
8. Click **OK**.

Microphone

Note: Audio recording requires an Audio Channel License.

Use the Microphone dialog box to change the settings for the microphone input on a supported device. You can link the audio with any camera connected to the server.

Note: The dialog box may appear different depending on the camera. Some cameras do not offer the full set of configuration options.

Changing Microphone Settings

1. Right-click the camera in the System Explorer and select **Setup** to open the camera Setup dialog box.
   See Accessing the Camera Setup for more information.
2. Click **Microphone**. The Microphone dialog box appears.

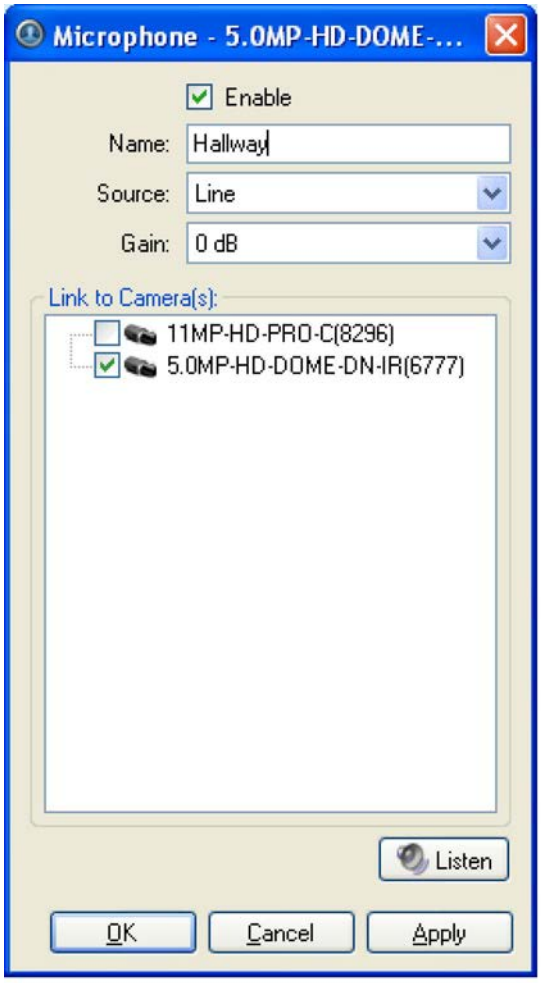

Figure A. Microphone dialog box

3. Complete the following fields:
    - **Enable:** select this check box to enable audio recording from this input.

      Note: An error message will appear if you do not have an Audio Channel License.
    - **Name:** enter a name for the audio input.
    - **Source:** select either line or microphone depending on the type of audio source.
    - **Gain:** select the amount of analog gain to be applied to the audio in the device.

      Values above **0 dB** will increase the volume of the audio source and negative values will decrease the volume.
4. Click **Listen** to test the settings and listen to the audio source.
5. In the Link to Camera(s) area, select the camera video that is linked with the audio.
6. Click **OK**.

Client Setup

You can modify the local client properties in the client Setup dialog box. The client Setup includes configuring the following settings:

Accessing the Client Setup

Perform one of the following steps to open the client Setup dialog box in the Avigilon Control Center Client software.

- Select **Tools > Setup...** and select the local client from the left pane.
- In the System Explorer, right-click the local client and select **Setup**.

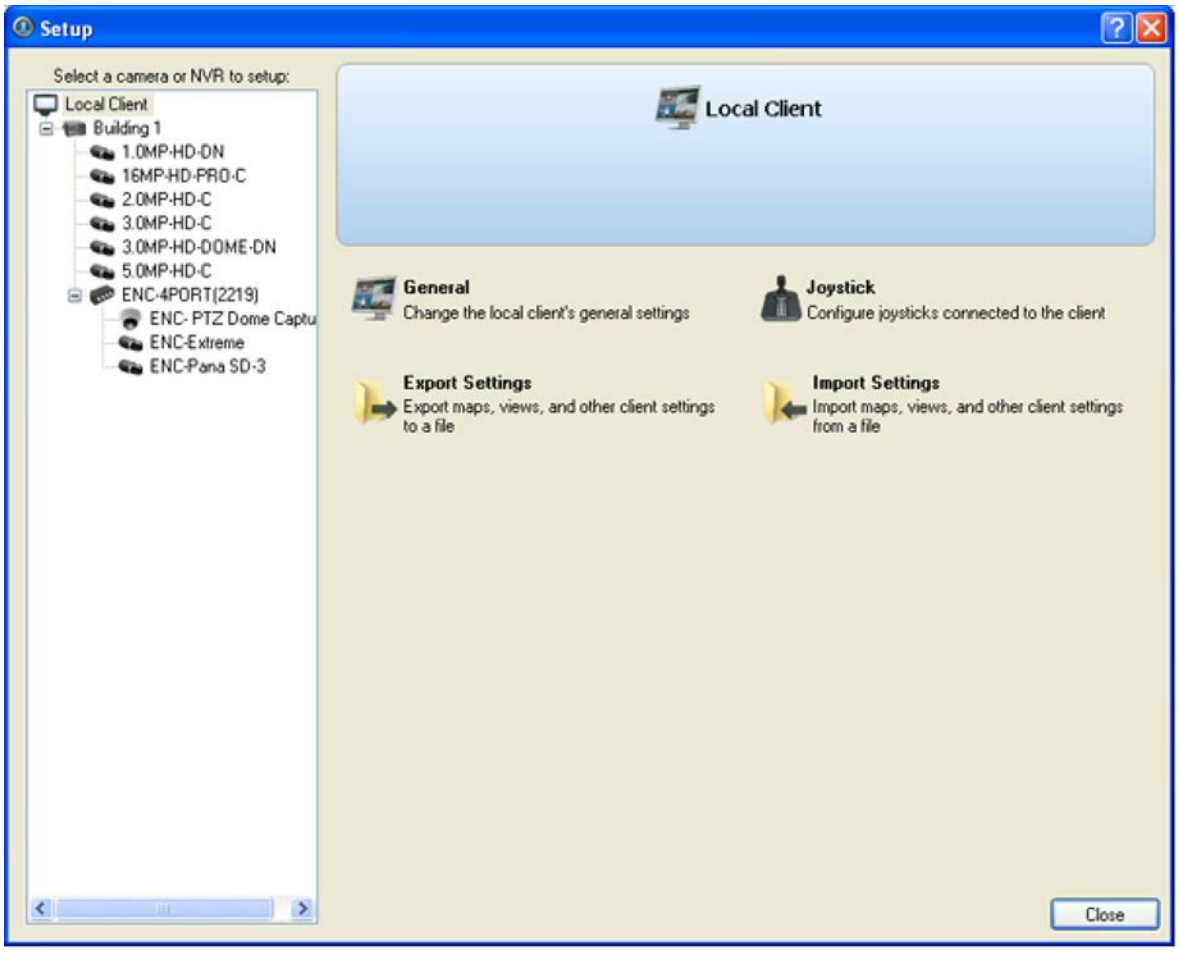

Figure A. Setup Local Client dialog box

General

Use the client General dialog box to change the local client's log in preferences and connection speed.

The client's connection speed can be changed to match the available incoming network bandwidth. This is useful when streaming video over the internet.

Changing General Client Settings

1. Right-click the local client in the System Explorer and select **Setup** to open the client Setup dialog box.
   For more information, see Accessing the Client Setup.
2. Click **General**.
3. In the General dialog box, complete the following fields as required:

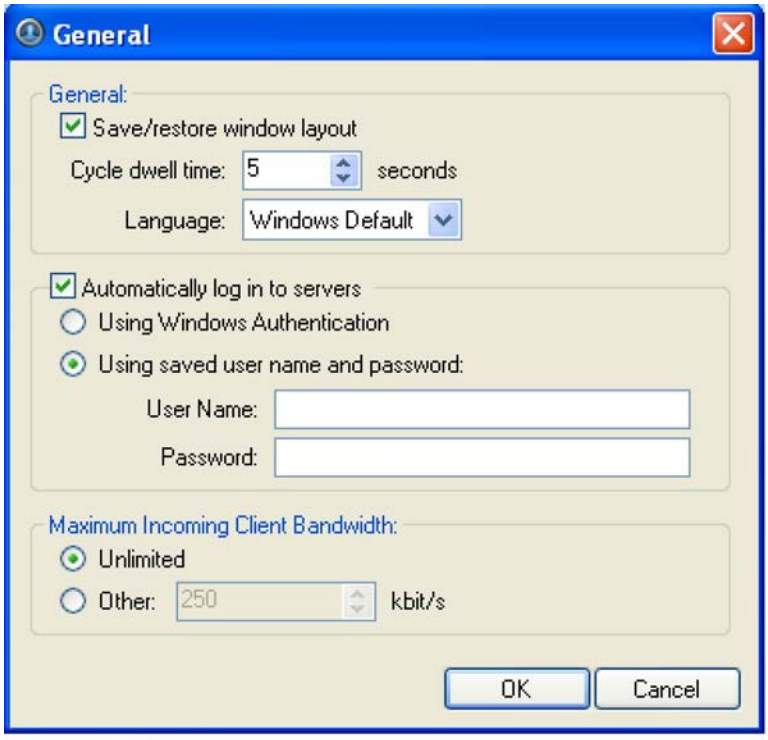

Figure A. General dialog box

- **Save/restore window layout:** select this check box if you want the application to remember your layout preferences.
- **Cycle dwell time:** enter the number of seconds the application waits before it cycles to a different View. See Cycling Through Views for more information.

- **Language:** select a language from the drop down list to change the application language. Select **Windows Default** for the application to automatically display the same language as the local client.
- **Automatically log in to servers:** select this check box to enable the application to automatically log you into all servers that are available on the network. Select the type of login you use: **Windows Authentication** — your Windows login; or **saved user name and password** — your Avigilon Control Center username and password.
- In the Maximum Incoming Client Bandwidth area, select **Unlimited**, or select **Other** and specify the maximum kilobits per second (kbit/s) you want to allow.

4. Click **OK**.

Joystick

The Avigilon Control Center Client software supports two types of joysticks: standard Microsoft DirectX USB Joysticks and the Avigilon Professional Joystick Keyboard.

Use the Joystick dialog box to configure joystick settings.

Configuring a Standard USB Joystick

Use the Joystick dialog box to configure the buttons used in your standard Microsoft DirectX USB joystick.

1. Connect the joystick.
2. Right-click the local client in the System Explorer and select **Setup** to open the client Setup dialog box.
   For more information, see Accessing the Client Setup.
3. Click **Joystick**.
4. If the joystick is not automatically detected, an error message will appear. Click **Scan for Joysticks...**.

   Note: The error message will not appear if the joystick was detected.

   When the joystick is detected, the Joystick dialog box appears.

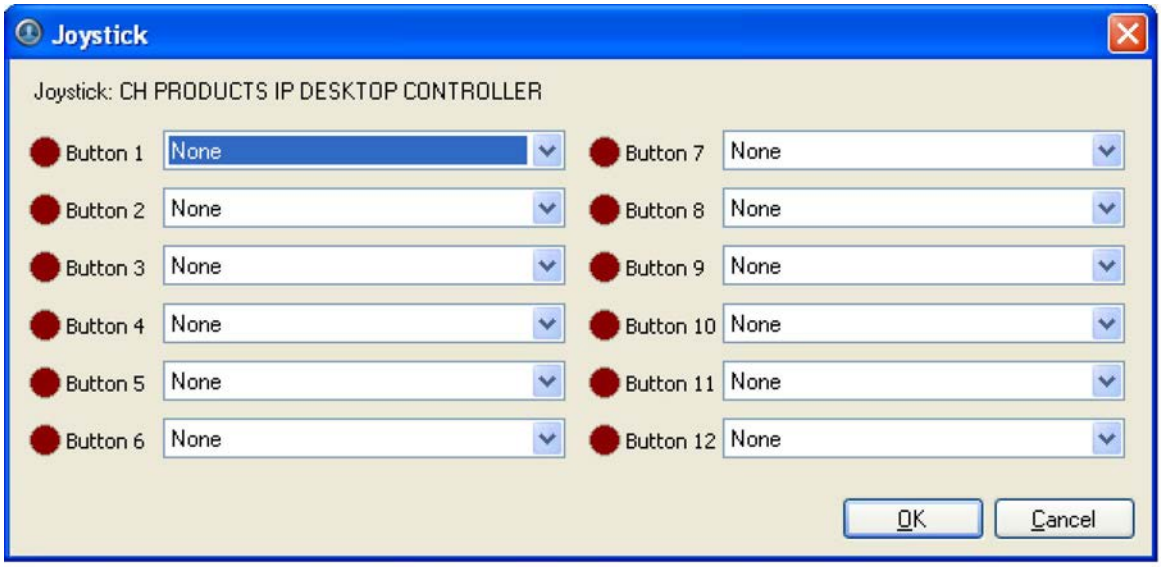

Figure A. Joystick dialog box

5. Set up an action for each button on the joystick:
    a. Press a button on the joystick. The button label is highlighted in the Joystick dialog box.
    b. Select an action for the button from the drop down list.
    c. Repeat this procedure for each button on the joystick.
6. Click **OK**.

Configuring an Avigilon Professional Joystick Keyboard

The Avigilon Professional Joystick Keyboard is a USB add-on that contains a joystick for controlling zoom and pan within image panels, a jog shuttle for controlling the Timeline, and a keypad programmed with the Client software keyboard commands.

By default, the keyboard is installed in right-hand mode. Use the Joystick dialog box to configure left-hand mode.

1. Connect the keyboard.
2. Right-click the local client in the System Explorer and select **Setup** to open the client Setup dialog box.
   For more information, see Accessing the Client Setup.
3. Click **Joystick**.
4. If the keyboard is not automatically detected, an error message will appear. Click **Scan for Joysticks...**.

Note: The error message will not appear if the keyboard was detected.

When the keyboard is detected, the Joystick dialog box appears.

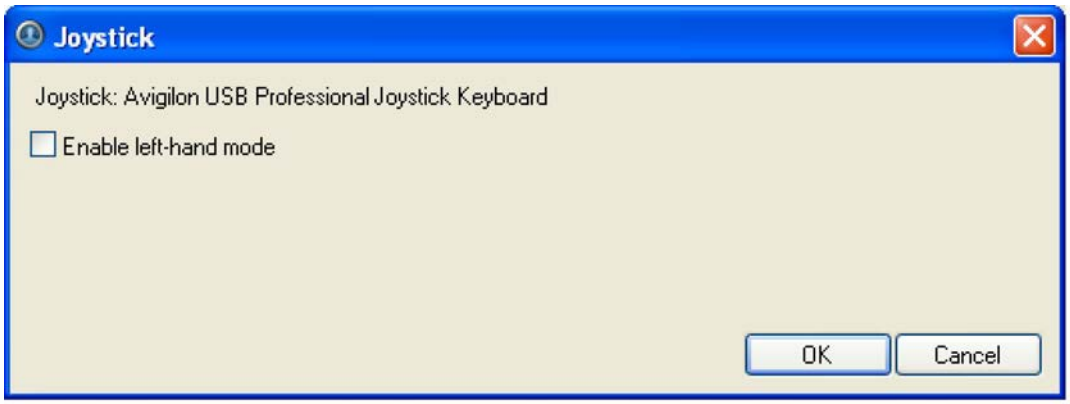

Figure A. Joystick dialog box

5. Select the **Enable left-hand mode** check box.
6. Click **OK**.

The keyboard is now configured for left-hand mode.

Rotate the keyboard until the joystick is on the left and the jog shuttle is on the right. Reinstall the keypad cover with the View button labels at the top.

Exporting Settings

You can export your personalized settings for the Client software so that the settings can be backed up or used on a different computer.

To export server settings like Recording Schedules, Users & Groups, Device, POS Source, and Device Connection settings, see the *Avigilon Control Center Server User Guide*.

Note: Some features are not displayed if the server does not have the required license, or if you do not have the user permissions to access the feature.

Exporting client settings

1. Right-click the local client in the System Explorer and select **Setup** to open the client Setup dialog box.
   For more information, see Accessing the Client Setup.
2. Click **Export Settings**.
3. Select the items you want to export.

Figure A. Export Settings dialog box

The **General settings** include display quality, deinterlacing, manually added servers, image overlays, and client connection speed.

4. Click **OK**.
5. In the Save As dialog box, name and save the file.

   Exported client settings can only be saved in Avigilon Client Settings File (AVC) format.

Import Settings

Import and use settings that were previously exported from the local client, or from a different computer.

Importing client settings

1. Right-click the local client in the System Explorer and select **Setup** to open the client Setup dialog box.
   For more information, see Accessing the Client Setup.
2. Click **Import Settings**.
3. In the Select File to Import From dialog box, browse to the settings file you want to import, and click **Open**.
4. Select the specific settings you want to import.

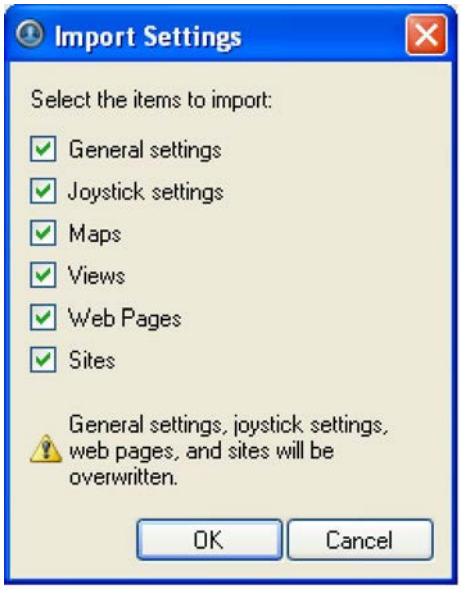

Figure A. Import Settings dialog box

5. Click **OK**.

Site View

What is Site View?

Site View is a way to customize the way cameras and servers are displayed in the System Explorer.

The System Explorer is the left pane of the application window, where all your servers and cameras are organized for easy access. The System Explorer is able to organize your surveillance system in two ways: Server View and Site View. Server View lists all the servers, cameras, and encoders that are available to you, and gives you quick access to your maps, web pages, and saved Views.

Site View allows you to customize the way cameras, servers, encoders, maps, saved Views and web pages are displayed in the System Explorer. You can organize the cameras by location, or only display maps of the surveillance site.

Accessing Site View

Site View allows you to customize the System Explorer display. The default Server View lists all the cameras on the network by the server they are connected to. This may not be logical for your needs, so you can create a Site View that reflects your surveillance requirements. For example, you can create a Site View that mimics the layout of each floor in your building, or group all the cameras that face the north end of your surveillance site.

To access the Site View, performing the following:

- In the System Explorer pane, select **Site View** from the views drop down list.

Figure A. System Explorer

If you have not yet created a Site View, you will be prompted to set up a new Site View. Click **Yes** to add a site, see Adding a Site for more information.

Adding a Site

The System Explorer Site View allows you to customize the way cameras, servers, encoders, personalized maps, saved Views and web pages are displayed. Add new sites to group items together.

1. Select **File > Edit Site View...** to open the Edit Site View dialog box.

   If you try to access the System Explorer Site View before a site has been added, you will be prompted to set up a new site. Click **Yes** to open the Edit Site View dialog box.

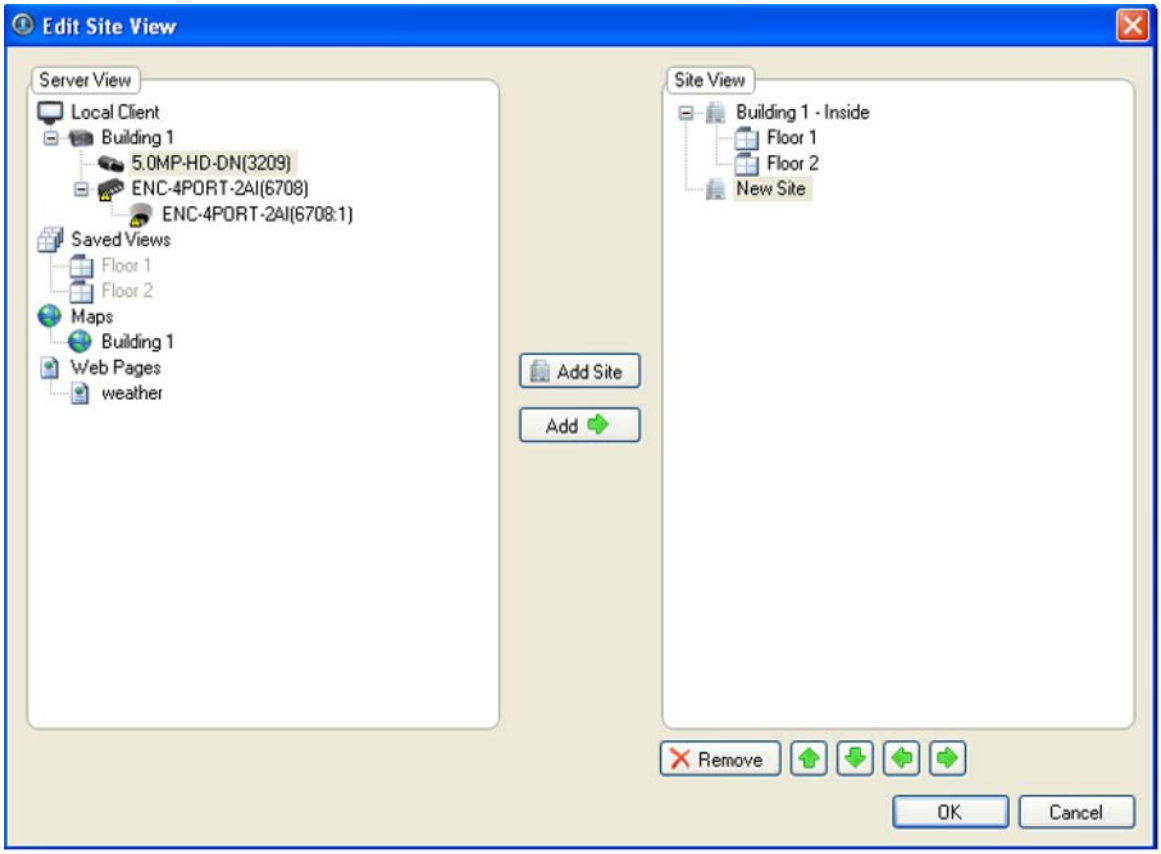

Figure A. Edit Site View dialog box

2. In the Site View pane, select and rename the New Site.
3. In the Server View pane, select any of the listed items and click **Add**.

   Note: Only the servers you are logged into are displayed.

4. Once the selected item has been added to the Site View pane, use the green arrows to position the item in your Site View.
5. Click **Add Site** to create a new site to group items under.
6. Click **Remove** to remove any item from the Site View.

7. When your Site View is complete, click **OK**.

Editing and Deleting a Site

Whenever your site requirements change, you can edit or delete the configured Site View.

1. Select **File > Edit Site View** to open the Edit Site View dialog box.
2. In the Edit Site View dialog box, perform one of the following:
    - To edit the Site View, make the required changes then click **OK**.
    - To delete the entire Site View, select each site and click **Remove**. When there are no sites listed in the Site View, click **OK**.

      Next time you attempt to open Site View in the System Explorer, you will be prompted to create a new Site View.

Views

What are Views?

A View is a tab composed of image panels that allow you to organize how video is monitored.

For example, you can choose to monitor video from multiple cameras simultaneously by using different layouts.

Adding and Removing a View

Views allow you to customize how you monitor video. You can add a new View to an existing window or open a new View in its own window to make use of multiple monitors. Views can also be removed as required.

Adding a New View to the Application Window

Perform one of the following to open a new View in the application window:

- Select **File > New View**.
- From the toolbar, click the **New View** button.

Adding a View to a New Window

Perform one of the following to open a new View window.

- Select **File > New Window**.
- From the toolbar, click the **New Window** button.

A new window appears. You can now position this window to make use of multiple monitors.

Closing a View from the Application Window

Perform one of the following to remove a View from the application window:

- Select **File > Close View**.
- On the View tab, click the red **Close View** button.

Figure A. Close View button

Closing a Window

- Select **File > Close Window**.

Selecting a Layout for a View

You can organize how video from multiple cameras are displayed by selecting a View layout.

- Select **View > Layouts > # Division**.
- On the toolbar, select one of the layout options.

Figure A. Layouts on the Toolbar

Making a View Full Screen

You can enlarge a View to maximize the use of the monitor.

Making a View Full Screen

- On the toolbar, click **Full Screen**.

Ending Full Screen

- On the toolbar at the top left of the screen, click

.

Tip: The toolbar is hidden when the application is idle. Move your mouse to display the toolbar.

Cycling Through Views

Once you have multiple Views setup, you can cycle through the Views by displaying each for a few seconds. This is useful when monitoring a large number of cameras.

1. Activate the Cycle Tab function by performing one of the following:
    - From the View menu, select **Cycle Views**.
    - On the toolbar, click **Cycle Views**.

If required, the cycle dwell time can be changed, see Changing General Client Settings for more information.

Saving a View

Once you have set up a particular View, you can save the View for use again in the future. A saved View records the View layout, the cameras displayed in each image panel, and the image panel display settings.

Saving a View

1. Select **File > Save View**.
2. In the Save As dialog box, name the View and click **OK**.

Your saved view will appear in the System Explorer.

Figure A. Saved Views

Opening a saved View

Perform one of the following

- In the System Explorer, right-click the saved View and select **Open**.
- Drag the saved View from the System Explorer to the current View in the application or new window.

Renaming a saved View

1. In the System Explorer, right-click the saved View and select **Rename**.
2. In the Rename View dialog box, enter a new name and click **OK**.

Deleting a saved View

1. In the System Explorer, right-click the saved View and select **Delete**.
2. In the confirmation dialog box, click **Yes**.

Maps

A map is a graphical representation of your physical surveillance site, and an alternative view to the System Explorer. You can open a map in any image panel.

You can add cameras, encoders, servers, saved views, and other maps to your map to help you quickly navigate through your surveillance site.

To watch a video overview of the Maps feature, see *Module 4 - Working with Maps and Web Pages* in the Avigilon University - End User Stream.

Using a Map

You can view a map in any image panel, and open video or alarms from the map.

1. To open a map in a image pane, perform one of the following:
    - Drag the map from the System Explorer to an image panel.
    - In the System Explorer, right-click the map and select **Add to View**

Figure A. System Explorer: Maps List

2. When the map appears in an image panel, perform any of the following:

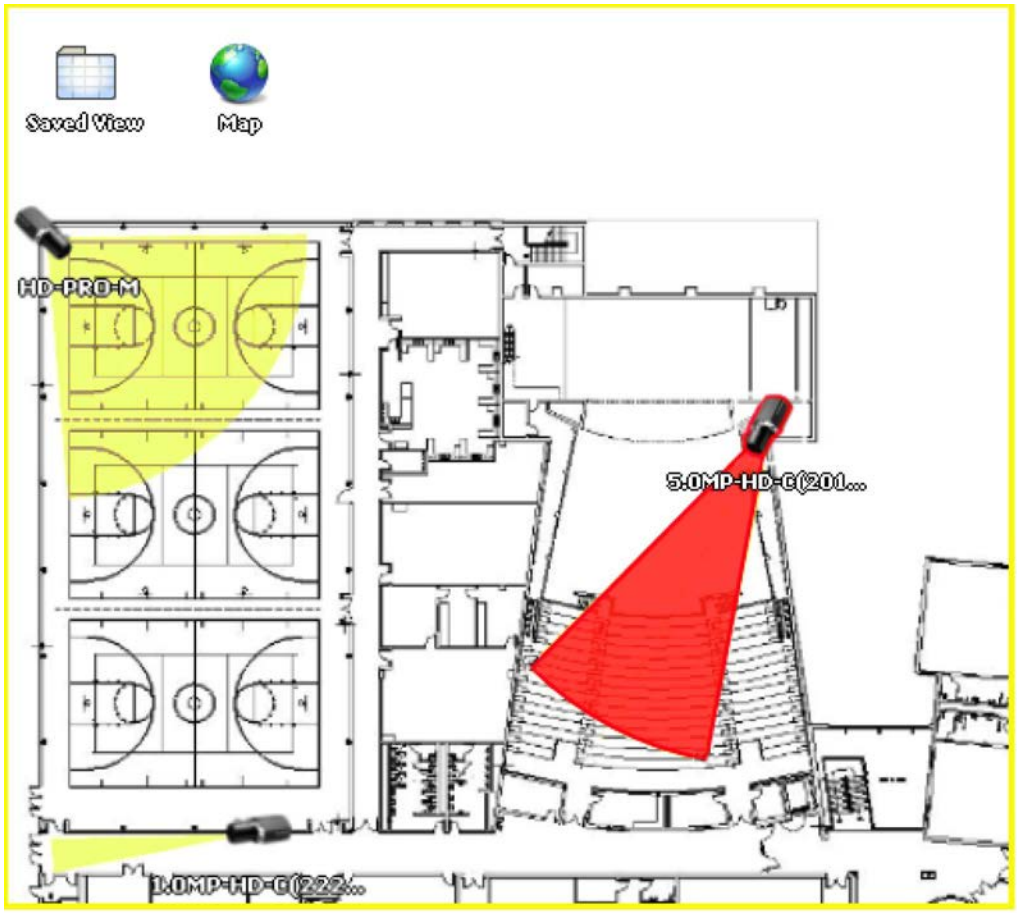

Figure B. Map display in an image panel.

To...	Do this...
Review an alarm	When a camera flashes in red, the alarm linked to the camera has been triggered. • Click the camera to monitor the live alarm video.
Display video from a camera on the map	• Drag a camera from the map to an image panel. • Click the camera on the map.
Open a linked map	• Click the map icon on the map. You can use the **Forward** and **Back** buttons to retrace your steps.
Open a linked View	• Click the Saved View placed on the map.

Adding a Map

You can create a map from any image in JPEG, BMP, PNG, or GIF format.

1. To start a new map, perform one of the following:
    - From the **File** menu, select **New Map**.
    - In the System Explorer, right-click the **Maps** icon, and select **New Map**.
2. In the Select Map Image dialog box, locate your map image and click **Open**.
3. In the **Map Editing** view, drag and place cameras from the System Explorer onto the map.

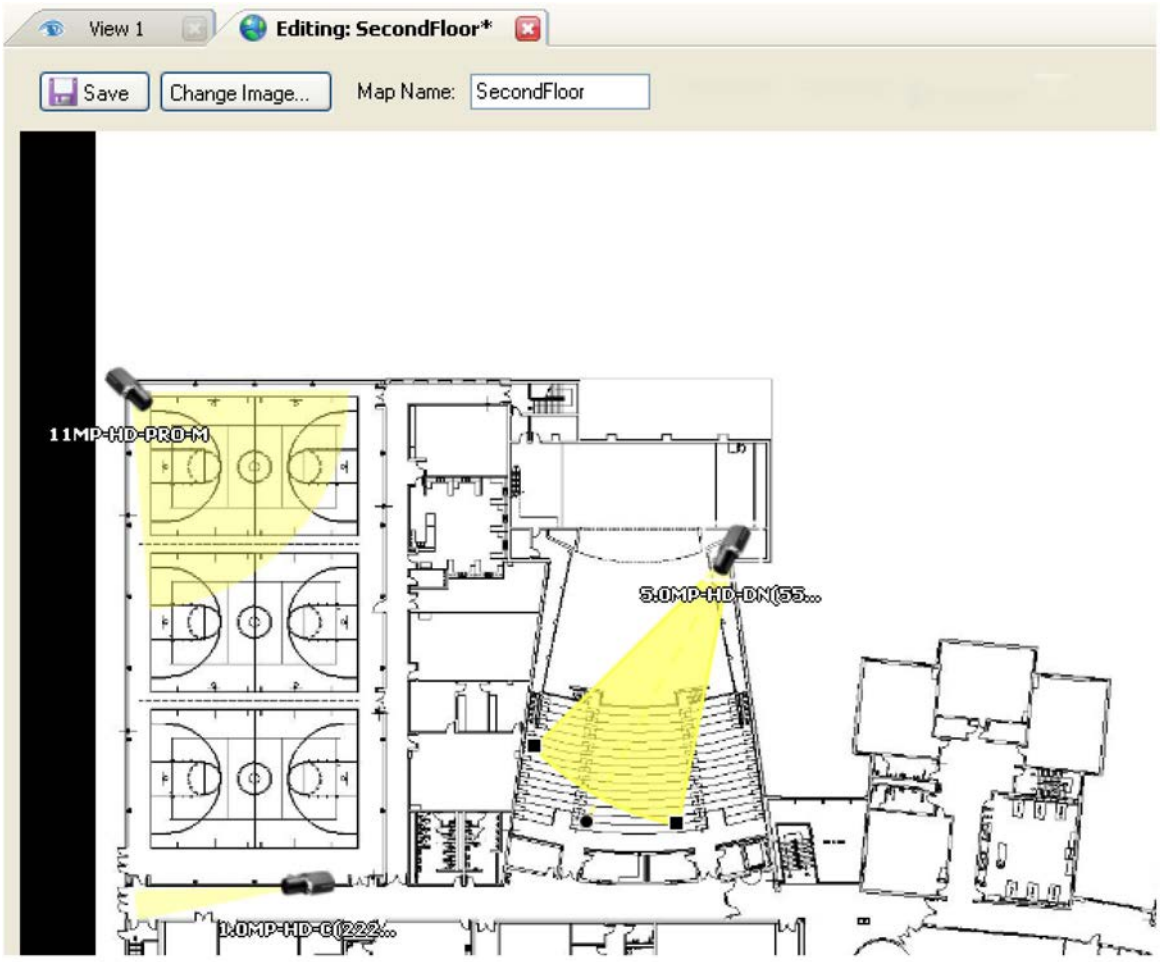

Figure A. Editing: Map tab

By default a camera is displayed as an icon with a yellow triangle to represent its field of view.

4. Drag encoders, servers, saved views and other maps from the System Explorer onto the map image, as required.

5. In the **Map Icon Properties** box, you can change the way icons are displayed on the map. Select any icon on the map and perform the following:

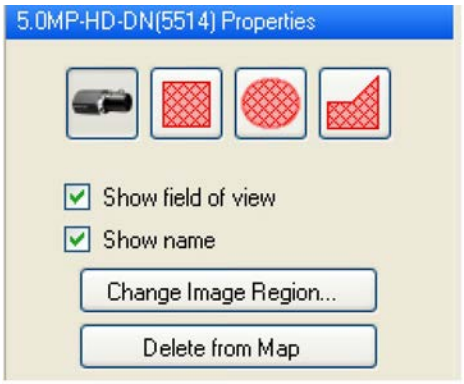

Figure B. Camera icon properties

4.

a. To replace an icon with a clickable shape region, select one of the shape buttons. You can choose a rectangle, ellipse, or polygon region to replace the icon.

b. Select the **Show name** check box to display the object's name on the map.

c. Click **Delete from Map** to remove the icon or clickable shape region from the map.

d. (Cameras only) Select the **Show field of view** check box to display the camera's yellow field of view.

To adjust the field of view, drag the corners of the yellow triangle to expand the field of view or drag the black circle icon at the end of the triangle to rotate the field of view.

e. (Cameras only) Click **Change Image Region...** to change the video region associated with the camera on the map.

In the Change Image Region dialog box, drag the corners of the green overlay to change the view, then click **OK**.

5. In the **Map Name** field, enter a name for the map.

6. Click **Save**.

Editing and Deleting a Map

Whenever a map no longer meets your current requirements, you can update the map or delete the old map.

Editing a Map

1. In the System Explorer, right-click a map and select **Edit**.

Figure A. System Explorer: Maps list

2. Make the necessary changes to the map and click **Save**.

Deleting a Map

1. In the System Explorer, right-click the map and select **Delete**.
2. When the confirmation dialog box appears, click **Yes**.

Web Pages

You can view online content while monitoring videos in a View, by adding web pages to the Avigilon Control Center.

To watch a video overview of the web pages feature, see *Module 4 - Working with Maps and Web Pages* in the Avigilon University - End User Stream.

Using a Web Page

To open a web page, perform one of the following

- Drag the web page from the System Explorer to an image panel.
- In the System Explorer, right-click the web page and select **Add to View**.

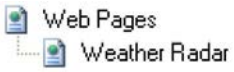

Figure A. Saved web pages

The web page is displayed in one of the image panels. Use the web browser buttons to navigate through the internet.

Figure B. Web image panel buttons.

Adding a Web Page

You can add web pages to the Avigilon Control Center Client software to enable quick access to web pages that are part of your surveillance system.

1. To open the Add Web Page dialog box, perform one of the following:

- From the File menu, select **New Web Page**.
- In the System Explorer, right-click the Web Pages icon, and select **New Web Page**.

Figure A. Add Web Page dialog box

2. Enter a name for the web page.
3. Enter the web page URL in the **Location** field.
4. Select a **Zoom Level** for viewing the web page inside an image panel.
5. Click **OK**.

Editing and Deleting a Web Page

Whenever a web page becomes out of date, you can choose to update the web page address or delete the web page.

Editing a Web Page

1. In the System Explorer, right-click a web page and select **Edit**.

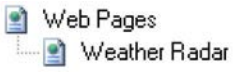

Figure A. Saved web pages

2. Make the required changes to the web page and click **OK**.

Deleting a Web Page

1. In the System Explorer, right-click the web page and select **Delete**.
2. When the confirmation dialog box appears, click **Yes**.

Video

The Avigilon Control Center Client software allows you to view multiple live and recorded video streams in a View, while giving you control of PTZ cameras, digital zoom, audio, manual recording, digital outputs, and other playback settings.

To watch a video of the application's video features, see *Module 1 - Introduction to Avigilon Control Center Client and Viewing Live Video* and *Module 2 - Identifying, Bookmarking, Searching and Exporting Video* in the Avigilon University - End User Stream.

Note: Some features are not displayed if the server does not have the required license, or if you do not have the user permissions to access the feature.

Viewing Live Video

While viewing live video, you can perform any of the following procedures.

Adding and Removing Cameras in a View

To view a camera's video, display the camera in a View. The video can be removed from the View when it is no longer needed.

Adding a Camera to a View

Perform one of the following:

- Drag the camera from the System Explorer pane to an empty image panel in a View.
- In the System Explorer, right-click the camera and select **Add to View**.

  The camera is added to the next empty image panel in the View layout.

Tip: You can drag the same camera to multiple image panels to view the images at different zoom levels or with different video adjustment properties.

Removing a Camera From a View

Perform one of the following:

- Right-click the image panel, and select **Close**.
- Inside the image panel, click **Close**.

Displaying Live Video

Once a camera video has been added to an image panel, you can choose to view the live video stream. You can set the entire View to display live video, or only set specific image panels to display live video.

Live video is indicated by a blue border around the image panel.

- To display live video in a View, perform one of the following:
  - Select **View > Live**.
  - On the toolbar, select

.
- To switch an individual image panel to view live video, right-click the image panel and select **Live**.

Zooming and Panning a Video

The zoom and pan tools allow you to focus on specific regions in a camera video.

Using the Zoom Tools

You can rotate the scroll wheel on your mouse to zoom in and out of a video image. Or you can use the Zoom tools in the application:

1. Select a Zoom tool:
   - From the **Tools** menu, select **Zoom In Tool** or **Zoom Out Tool**.
   - On the toolbar, click **Zoom In Tool** or **Zoom Out Tool**.
2. Click the image panel until you reach the desired zoom depth.

Using the Pan Tools

You can right-click and drag inside an image panel to pan the video image, or you can perform the following:

1. Select the Pan tool:
    - From the Tools menu, select **Pan Tool**.
    - On the toolbar, click the **Pan Tool**.
2. Drag the video image in any direction inside the image panel.

Controlling PTZ Cameras

Pan, Tilt, Zoom (PTZ) controls allow you to control cameras with PTZ functionality. You can control a PTZ camera by using the onscreen controls or by using the tools in the PTZ Controls pane.

1. To display the PTZ Controls pane, perform one of the following:
    - From the **Tools** menu, select **PTZ Controls**.
    - On the toolbar, click **PTZ Controls**.

    The PTZ Controls pane is displayed on the left, below the System Explorer.

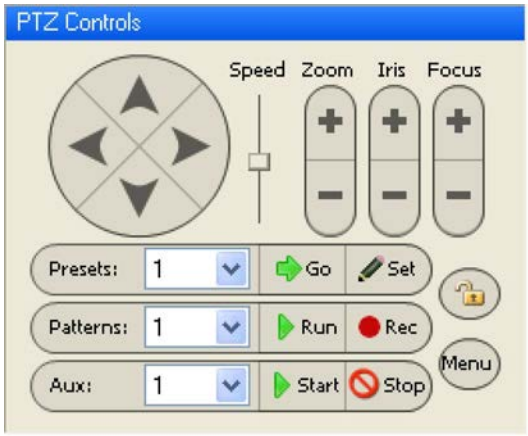

Figure A. PTZ Controls

2. Display the video from a PTZ camera in the current View.
3. To pan or tilt, perform one of the following:
    - Drag the mouse pointer in the direction that you want to move the camera. The further the mouse is from the center of the image panel, the faster the camera will move.

- Click the **Pan/Tilt** arrow buttons in the PTZ Controls pane. The speed for all pan/tilt movements can be adjusted using the **Speed** slider.

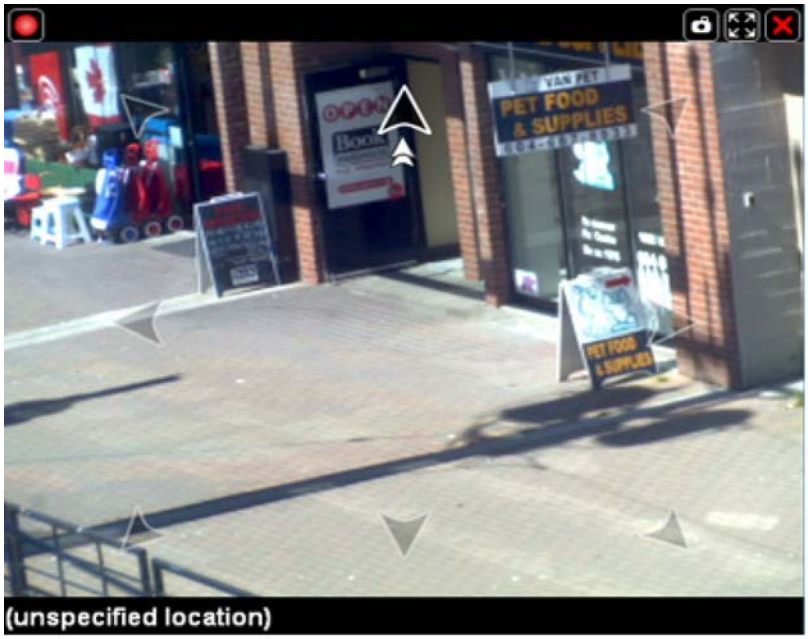

Figure B. PTZ On-Screen Controls

4. Use the other PTZ controls to perform any of the following:

Action	Control	Procedure
To zoom		Perform one of the following: • Click on the zoom controls in the PTZ Controls area. • Click the image panel and use the mouse scroll wheel to zoom in and out.
To control the **Iris** or **Focus**		Click the **+** and **-** buttons.
To program a PTZ preset		1. Use the PTZ buttons to move the camera field-of-view to the desired position. 2. In the PTZ Controls pane, select a preset number and click **Set**.

To activate a PTZ preset		Select a preset number and click **Go**.
To program a PTZ pattern		1. In the PTZ Controls pane, select a pattern number and click **Rec**. 2. Use the PTZ controls to initiate a series of camera movements. 3. In the PTZ Controls pane, click **Stop**.
To activate a PTZ pattern		In the PTZ Controls pane, select a pattern number and click **Run**. The pattern will repeat until the pattern is stopped or another pattern is set.
To activate an auxiliary command		1. Select an command number and click **Start** to initiate the auxiliary output. 2. Click **Stop** to turn off the auxiliary output.
To display the PTZ camera onscreen menu		1. Click the **Menu** button. 2. In the PTZ Controls pane, use the pan/tilt controls to navigate the menu. Use the **Pan/Tilt** buttons to navigate the menu. Use the **Zoom** buttons to modify your selection choices. Use the **Focus** buttons to confirm or cancel your selections.
To lock the PTZ controls		Click the **Lock** button. No other user will be able to use the PTZ controls for the selected camera until you unlock the

		controls or log out.

Listening to Audio in a View

If there is a microphone linked to a camera, the Audio bar is displayed in the image panel when you view the camera's video.

Note: This feature is only available if there is a microphone and a Audio Channel License installed.

To control the audio settings, perform any of the following:

- In the lower-right corner of the image panel, click the **Speaker** icon to mute or activate the audio.
- Move the slider to change the volume level.

Figure A. Audio bar

Triggering Manual Recording

When viewing live video, you can click the **Manual Recording** icon to force the camera to record the current video stream regardless of the camera's recording schedule.

The **Recorder Indicator** overlay must be enabled for manual recording to function. See Overlaying Information on the Image Panel for more information.

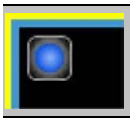	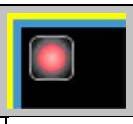	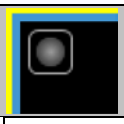
If the icon is blue, it is in Continuous Recording mode.	If the icon is red, an event has caused the camera to begin recording.	If the icon is grey, the camera is not recording.

Starting Manual Recording

- In the top-left corner of the image panel, click the record indicator to start manual recording.

Figure A. Manual Recording indicator

The record indicator is highlighted in blue to indicate that the camera is recording. Manual recording continues until it is stopped, or until the maximum recording duration is reached. The maximum duration is configured in the Manual Recording dialog box, see Manual Recording Settings for more information.

Stopping Manual Recording

- In the top-left corner of the image panel, click the record indicator to stop manual recording.

Figure B. Manual Recording indicator

Triggering Digital Output

While you view live video in an image panel, you can manually trigger any digital output that is linked to the camera.

The digital output is configured in the Digital Inputs and Outputs dialog box, see Setting Up Digital Outputs for more information.

1. Open the camera's live video in an image panel.
2. In the image panel, click **Trigger Digital Output**.
3. If you have more than one digital output linked to the camera, you will be prompted to select the digital output you want to trigger.

Viewing Recorded Video

While viewing recorded video, you can perform any of the following procedures:

Adding and Removing Cameras in a View

To view a camera's video, display the camera in a View. The video can be removed from the View when it is no longer needed.

Adding a Camera to a View

Perform one of the following:

- Drag the camera from the System Explorer pane to an empty image panel in a View.
- In the System Explorer, right-click the camera and select **Add to View**.

  The camera is added to the next empty image panel in the View layout.

Tip: You can drag the same camera to multiple image panels to view the images at different zoom levels or with different video adjustment properties.

Removing a Camera From a View

Perform one of the following:

- Right-click the image panel, and select **Close**.
- Inside the image panel, click **Close**.

Displaying Recorded Video

Once a camera video has been added to an image panel, you can choose to view the camera's recorded video. You can set the entire View to display recorded video, or only set specific image panels to display recorded video.

Recorded video is indicated by a green border around the image panel.

- To display recorded video in a View, perform one of the following:
  - Select **View > Recorded**.
  - On the toolbar, select

.
- To switch an individual image panel to view recorded video, right-click the image panel and select **Recorded**.

Zooming and Panning a Video

The zoom and pan tools allow you to focus on specific regions in a camera video.

Using the Zoom Tools

You can rotate the scroll wheel on your mouse to zoom in and out of a video image. Or you can use the Zoom tools in the application:

1. Select a Zoom tool:
    - From the **Tools** menu, select **Zoom In Tool** or **Zoom Out Tool**.
    - On the toolbar, click **Zoom In Tool** or **Zoom Out Tool**.
2. Click the image panel until you reach the desired zoom depth.

Using the Pan Tools

You can right-click and drag inside an image panel to pan the video image, or you can perform the following:

1. Select the Pan tool:
    - From the Tools menu, select **Pan Tool**.
    - On the toolbar, click the **Pan Tool**.
2. Drag the video image in any direction inside the image panel.

Listening to Audio in a View

If there is a microphone linked to a camera, the Audio bar is displayed in the image panel when you view the camera's video.

Note: This feature is only available if there is a microphone and a Audio Channel License installed.

To control the audio settings, perform any of the following:

- In the lower-right corner of the image panel, click the **Speaker** icon to mute or activate the audio.
- Move the slider to change the volume level.

Figure A. Audio bar

Playing Back Recorded Video

The Timeline displays the time period when video were recorded and provides several controls for playing back the recordings.

The colored bars on the Timeline display a camera's recording history:

- A red bar indicates the camera recorded an event (for example, an alarm or motion event).
- A blue bar indicates the camera recorded video, but not in response to any event.
- White areas indicate that the camera did not record any video.
- An orange bar indicates a bookmark in the camera's recording history.

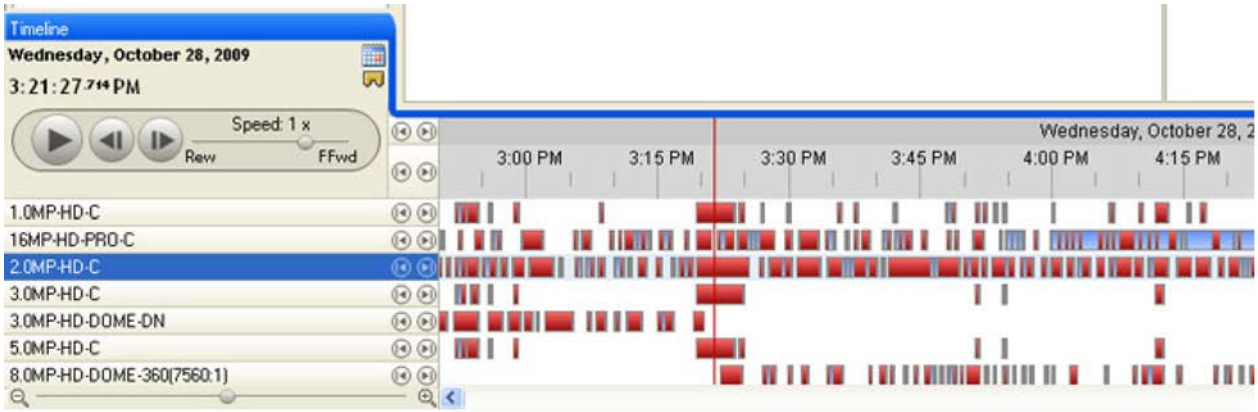

Figure A. Playback tools on the Timeline

Perform any of the following actions to control the playback of recorded video files:

Action	Tool	Procedure
To select a playback time		Perform one of the following: • Click the calendar and select a date and time. • On the Timeline, click on an area with recorded data indicated by a colored bar.
To add a		Click **Add Bookmark** to add a bookmark on the

bookmark		Timeline. See Bookmarking Recorded Video for more information.
To start playback		Click **Play**.
To stop playback		Click **Pause**.
To move forward a frame		Click **Step Forward**.
To move back a frame		Click **Step Backward**.
To control the playback direction and speed		Click and drag the slider to the right to move the video forward, or to the left to move the video in reverse. The further the slider is away from the center the faster the playback speed.
To jump forward or back on the Timeline		On the Timeline, click one of the **Go Forward** or **Go Back** buttons to move to different points on the Timeline.
To expand the Timeline to a specific moment in time		Perform one of the following: • Move the slider to zoom in or zoom out on the Timeline. • You can also use the mouse scroll wheel to zoom in or zoom out on the Timeline.
To center the Timeline on the time marker	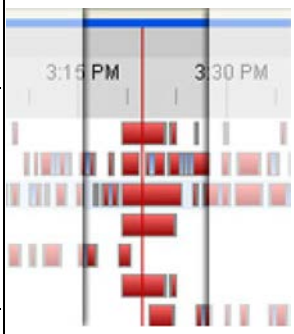	Right-click the Timeline, and select **Center on Marker.**
To move through the Timeline quickly with the time marker		Drag the time marker through the Timeline.
To pan the Timeline		Perform one of the following:

		• Move the Timeline horizontal scroll bar at the bottom of the application window. • Right-click and drag the Timeline.

Bookmarking Recorded Video

You can add bookmarks to help identify segments of recorded video. Bookmarked video can be protected against scheduled data cleanup so the video is never deleted.

Adding a bookmark

1. To open the Edit Bookmark dialog box, perform one of the following:
   - On the Timeline, click **Add Bookmark**.
   - Drag the time marker to the beginning of the time you want to bookmark, then right-click and select **Add Bookmark**.

   The Edit Bookmark dialog box appears, and the bookmark time range is highlighted on the Timeline

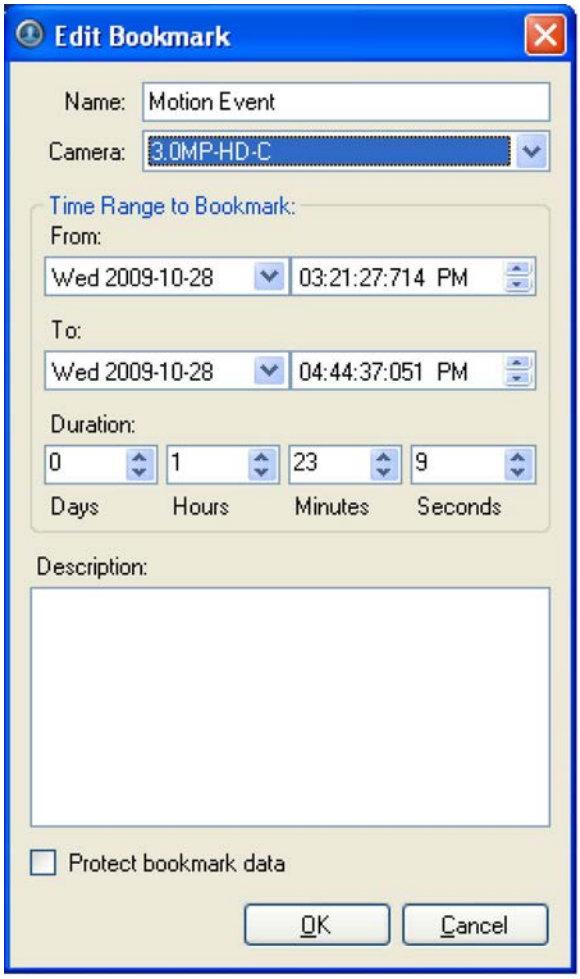

Figure A. Add Bookmark dialog box

2. In the **Name** field, enter a name for the bookmark.
3. In the **Camera** drop down list, select the camera the bookmark is attached to.
4. In the Time Range to Bookmark area, enter the time period you want to bookmark.

   You can also move the black time range markers on the Timeline to adjust the time range.
5. In the **Description** field, enter any required information about the bookmark.
6. To protect the bookmark data from deletion select the **Protect bookmark data** check box.

   Note: Protected bookmarks are never deleted. Be aware that bookmarked video occupy space on the server and become the oldest stored video.
7. Click **OK**.

Editing, deleting or exporting a bookmark

1. Click the bookmark on the Timeline then perform one of the following:

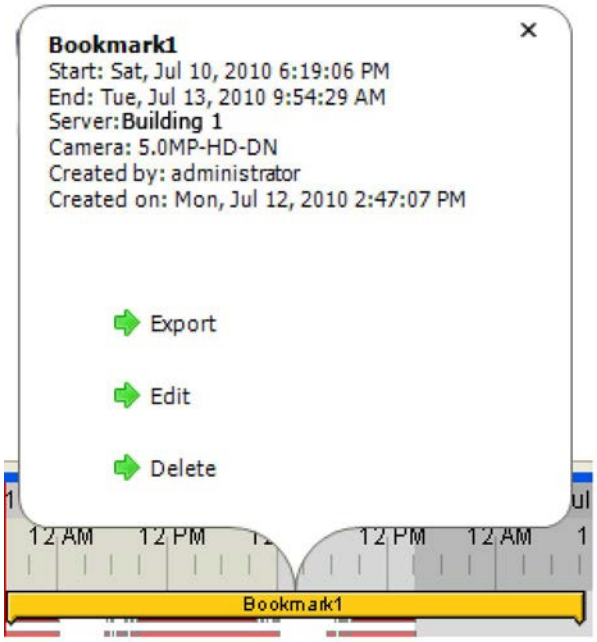

Figure B. Bookmark properties

To	Do this...
Edit a bookmark	Click **Edit** then make the necessary changes to the Edit Bookmark dialog box and click **OK**. Refer to the Adding a Bookmark procedure for details about the Edit Bookmark dialog box.
Delete a bookmark	Click **Delete**. When the confirmation dialog box appears, click **Yes**.
Export a bookmark	Click **Export** then complete the Export tab. See Exporting Recorded Video and Images for more information.

Adjusting Video Display in Image Panels

You can adjust the image panel display settings to enhance the video display on your monitor.

Maximizing an Image Panel

You can enlarge an image panel to help magnify the video displayed.

Maximizing an Image Panel

Perform one of the following:

- Right-click an image panel and select **Maximize**.
- Inside the image panel, click **Maximize**.
- Double-click the image panel.

Restoring an Image Panel

Perform one of the following:

- Right-click the maximized image panel, and select **Restore Down**.
- Inside the image panel, click **Restore Down**.
- Double-click the image panel.

Displaying Video Overlays

When you monitor video in a View, you can select the type of information that is displayed over the video in each image panel.

- Select **View > Image Overlays**, then select one or more of the following:

Option	Description
Camera Name	Displays the name given to the camera.
Camera Location	Displays the location given to the camera.
Timestamp	Displays the exposure timestamp of the video. The timestamp only appears when viewing recorded video.
Record Indicator	Displays the recording status of a camera. The recording status is indicated by the round **Record Indicator** icon on the top left corner of the image panel. The Record Indicator only appears when viewing live video. The color of the icon indicates the camera's recording status. ▪ Red: recording because an event occurred ▪ Blue: recording ▪ Grey: not recording Select the **Record Indicator** icon at any time to begin manual recording.
PTZ Controls	Displays the controls for controlling PTZ cameras on the video image.

Motion Activity	Highlights detected motion events in red.
License Plate	Displays license plate numbers as they are detected. **Note:** This feature is only available if the License Plate Recognition feature is installed.

Changing the Display Quality

If you do not have sufficient network bandwidth or processing power, you may not be able to view video at the full image rate and full quality. You can bias the image panels to display video in high quality/low frame rate or low quality/high frame rate.

The Change Display Quality settings only affect the image panel display and does not affect the actual video quality or image rate transmitted between the camera and the server. To modify the camera's display settings, see Compression and Image Rate settings.

1. Open the Change Display Quality dialog box:
   - Select **Tools > Change Display Quality...**.
   - In the toolbar, click **Change Display Quality**.
2. In the Change Display Quality dialog box, select one of the following:

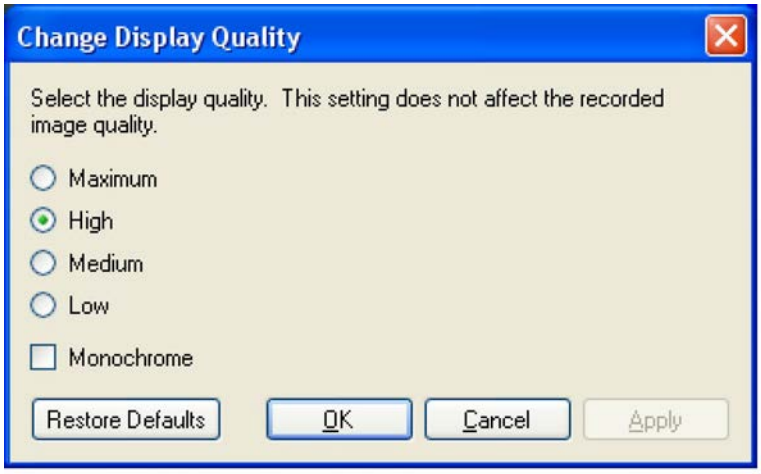

Figure A. Change Display Quality dialog box

   - **Maximum:** displays the full video quality and results in lowest displayed image rate.
   - **High:** displays 1/4 of the full video resolution.
   - **Medium:** displays 1/16 of the full video resolution.

- **Low:** displays 1/64 of the full video resolution and results in the highest displayed image rate.

3. Select the **Monochrome** check box to display the video in black and white.
4. Click **OK**.

Changing the Image Panel Display Settings

You can change the image panel display settings to bring out video details that are hard to see with the image panel's default settings.

Note: These settings only affect the image panel display and do not affect the camera's actual configuration.

1. Right-click an image panel and select **Display Adjustments...**.

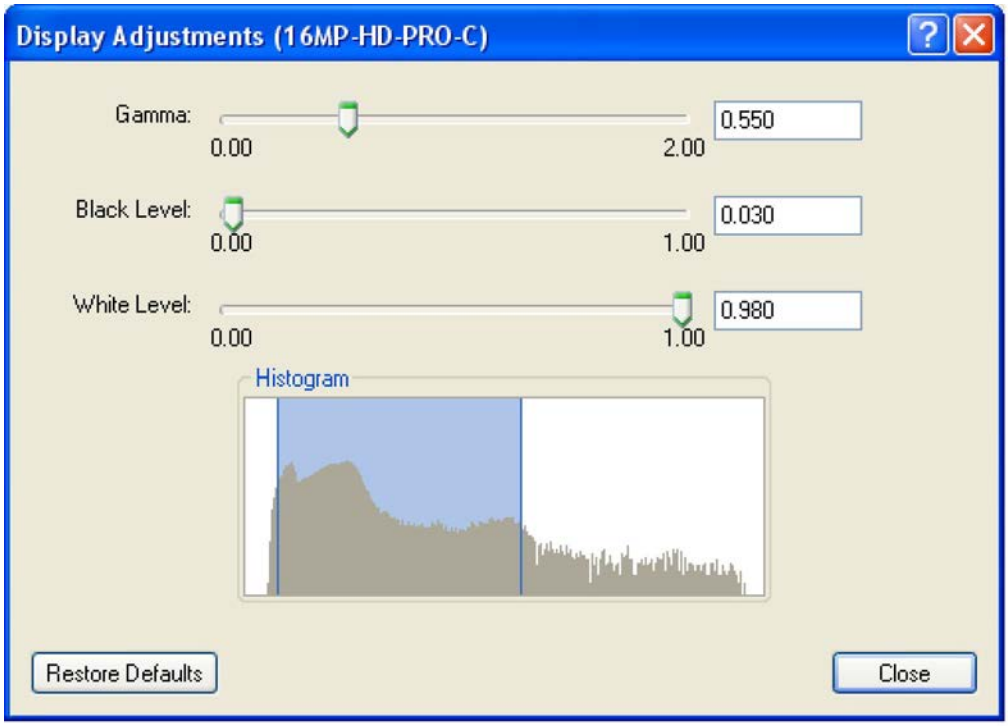

Figure A. Display Adjustments dialog box

2. Move the sliders to adjust the **Gamma**, **Black Level** and **White Level**.

   The image panel displays a preview of your adjustments.

3. Click **Restore Defaults** to clear your changes.
4. Click **Close**.

Viewing Analog Video in Deinterlaced Mode

If there are visible interlacing artifacts in the analog camera video, you can enable the deinterlacing filter to help improve the video image.

- To enable the deinterlacing filter, select **View > Display Deinterlaced Images**.

Alarms

The Alarms tab allows you to monitor and acknowledge alarms through the Avigilon Control Center Client software. Alarms are created in the server Setup, see Alarms for more information.

To watch a video overview of the Alarm Monitoring feature, see *Module 5 - Alarm Monitoring* in the Avigilon University - End User Stream.

Accessing the Alarms Tab

Perform one of the following steps to open the Alarms tab:

- From the **Tools** menu, select **Alarms...**.
- On the toolbar, click

.

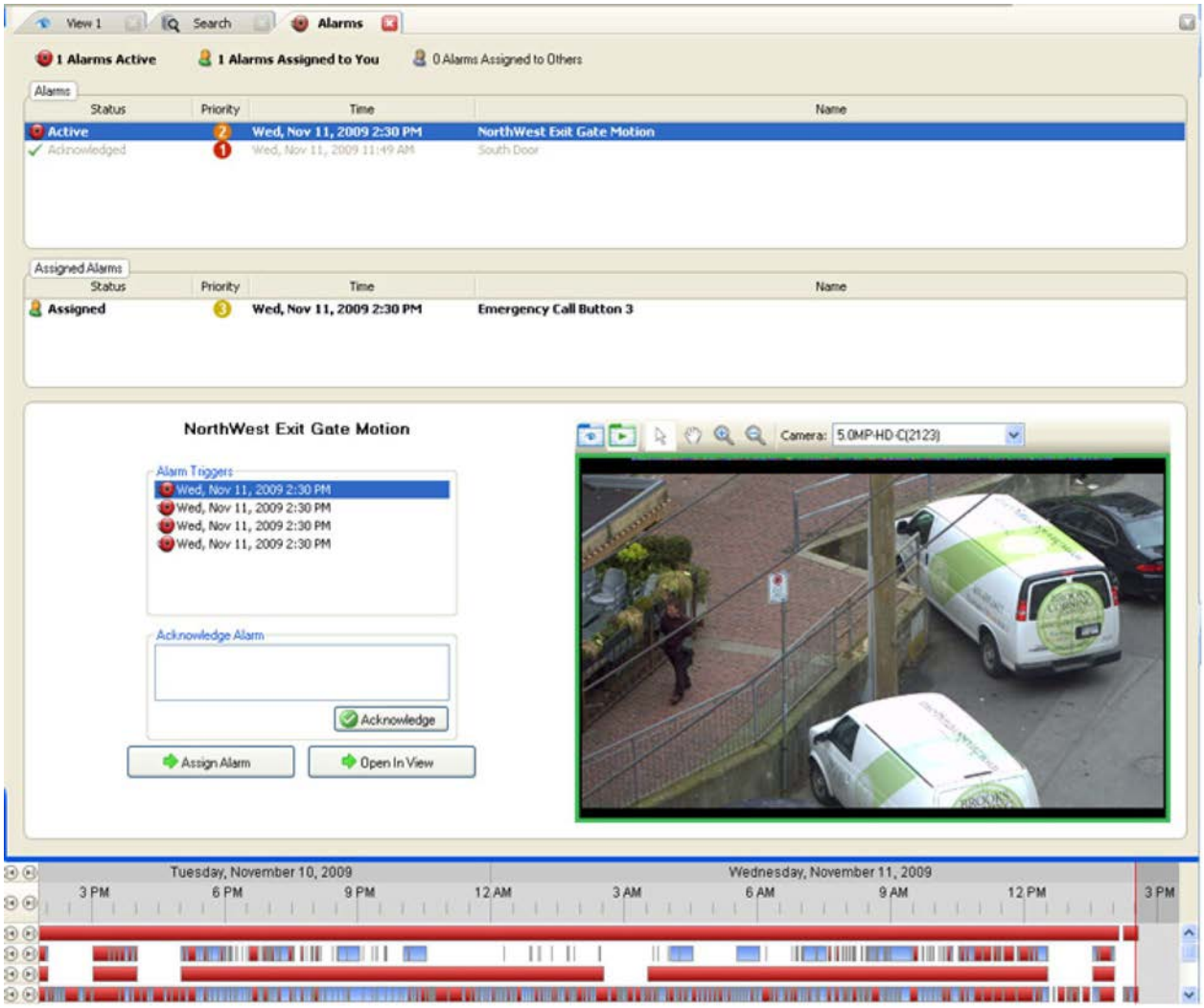

Figure A. Alarms tab

The Alarms tab is divided into the following areas:

- In the Alarms list is a list of alarms that are active, acknowledged, or assigned to another user. The alarms are sorted by status, priority then time.
- In the Assigned Alarms list is a list of alarms assigned to you. This list is not displayed when there are no alarms assigned to you.
- The Alarm Details area displays the alarm triggers and video when an alarm is selected from the Alarms list.
- The Timeline is used to play back the recorded alarm video.

Reviewing Alarms

In the Alarms tab, you can review alarm video and manage alarms. Active alarms can be assigned to yourself, and acknowledged alarms can be exported or purged as required.

Viewing Alarm Video

You can review active and acknowledged alarm video in detail through the alarm image panel, or opening the alarm video in a new View.

1. Select an alarm from the Alarms list. The alarm details are displayed.
2. In the Alarm Triggers list, select an alarm trigger to display the video for that alarm instance.
3. Use the alarm image panel controls to review the video in more detail.

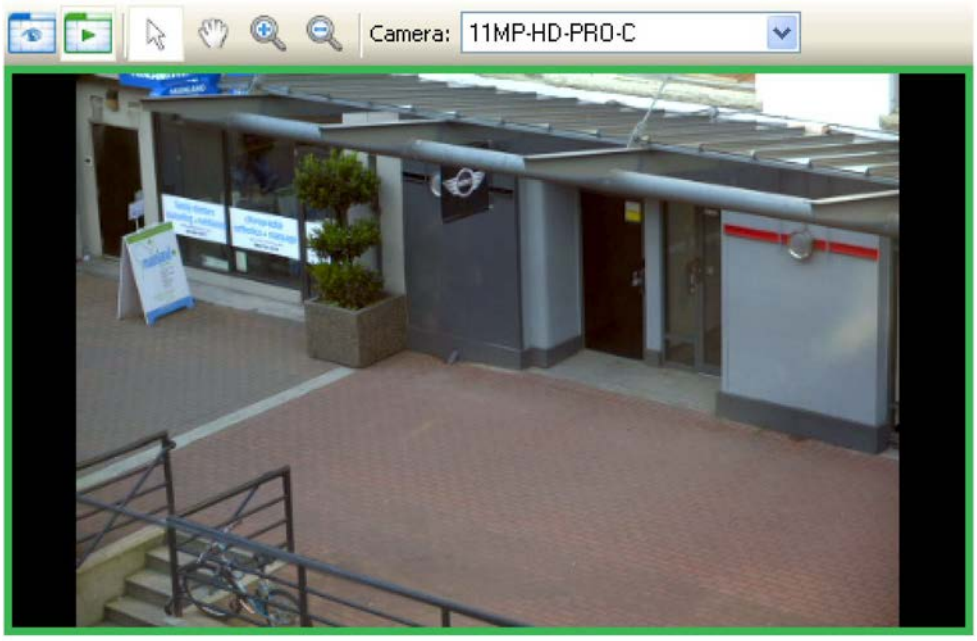

Figure A. Alarm image panel

   - In the **Camera** drop down list, select a camera that is linked to the alarm to review the video.
   - Use the **Zoom** and **Pan** tools to view specific parts of the video image in more detail. See Zooming and Panning in a Video for more information.
   - Use the **Live** and **Recorded** buttons to alternate from the recorded alarm video and the camera's live stream. See Viewing Live and Recorded Video for more information.

4. Click **Open In View** to open the alarm video in a new View.

5. Use the Timeline to control the video play back. See Playing Back Recorded Video for more information.

Assigning an Alarm

You can assign an alarm to yourself to avoid a duplication of effort in reviewing the alarm. Assigned alarms are hidden from other users until the alarm has been acknowledged.

Although you can only assign alarms to yourself, you can also unassign the alarm at any time.

1. Select an active alarm from the Alarms list.
2. When the alarm details are displayed, click **Assign Alarm**.

   The alarm is added to your Assigned Alarms list.
3. To unassign an alarm, select the alarm from the Assigned Alarms list and click **Unassign Alarm**.

Acknowledging an Alarm

Acknowledging an alarm indicates an alarm has been reviewed and is no longer active. You can acknowledge any alarm that is active or assigned to you.

1. After reviewing the alarm, enter notes describing the nature of the alarm in the Acknowledge Alarm text box.
2. Click **Acknowledge**.
3. If there is digital output linked to the alarm, a dialog box may appear to request permission to activate the digital output. Activate the digital output as required.

The Alarm is given an Acknowledged status in the Alarms list.

Searching Alarms

You can search through an alarm's history to review previous instances of the alarm.

1. Select an acknowledged alarm from the Alarms list.
2. In the alarm details area, click **Search Alarm**. See Performing an Alarm Search for more information.

Exporting Alarms

You can export alarm video for review on other computers.

1. Select an acknowledged alarm from the Alarms list.
2. In the alarm details area, click **Export Alarm**. See Exporting Recorded Video and Images for more information.

Purging an Alarm

Purging an alarm removes the alarm from the Alarms list until the alarm is activated again. Although the alarm is no longer listed in the Alarms list, the alarm information remains in the system and can still be searched.

1. Select an acknowledged alarm from the Alarms list.
2. In the alarm details area, click **Purge Alarm**.

Arming Image Panels

Arming an image panel reserves the image panel specifically for displaying video linked to alarms or rules. Armed image panels allow you to review and acknowledge alarms while monitoring video in a View. Any image panel can be armed or disarmed as required.

If there are no armed image panels, alarm video will appear in the next empty image panel in the current View, or in a new View if all current image panels are in use.

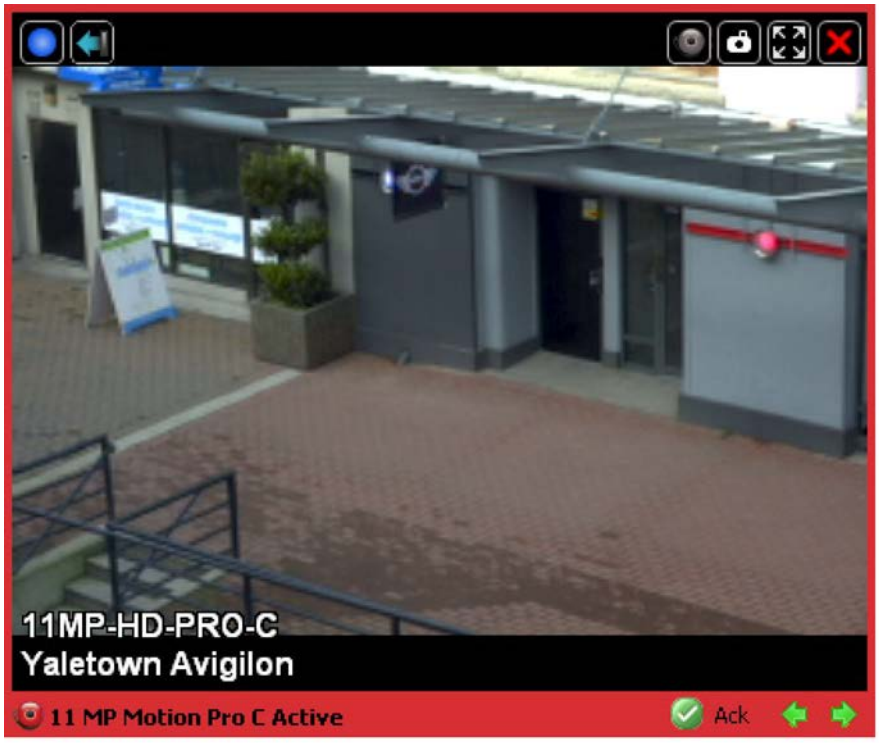

Figure A. Armed image panel

To arm or disarm an image panel, perform the following:

- In an image panel, click the **Arm Panel** button. The image panel is given a red border to show that it is armed.
- To acknowledge an alarm in the armed image panel, click the **Acknowledge** button.
- If the alarm is linked to multiple cameras, you can use the green arrows to move between the video linked to the alarm.
- To disarm an image panel, click the **Disarm Panel** button.

If multiple alarms are triggered at the same time, the linked video are queued within the armed image panel. The alarms are displayed by order of alarm priority then time. Once an alarm is acknowledged or assigned to a user, the alarm video is removed from the armed image panel.

Note: If you choose to close the video in the armed image panel, the alarm continues to be active until the alarm is acknowledged.

Video triggered by a rule are queued in the armed image panel after alarms, with the most recent video displayed first. Rules video are unlabeled and do not require acknowledgement.

License Plates

License Plate Recognition is a licensed feature that allows you to monitor the vehicle license plates that are detected by the Avigilon Control Center.

You can activate the license plate overlay to monitor license plates as they are detected. Or you can use the License Plate Watch List feature to notify you when specific license plates are detected.

To setup License Plate Recognition, see License Plate Recognition for more information.

License Plate Overlay

While you are monitoring video in an image panel, you can also monitor the license plates that come into the camera's License Plate Recognition field.

When the license plate overlay is enabled, license plate numbers are displayed in the bottom right corner of the image panel as license plates are detected by the camera.

To enable the License Plate overlay:

- Select **View > Image Overlays > License Plate**.

For more information about other overlays, see Displaying Video Overlays.

License Plate Recognition Watch List

The Watch List tracks the license plates you've configured the Avigilon Control Center System to recognize, and displays the detected matches in the License Plate Matches dialog box.

To configure the Watch List, see Configuring the Watch List for more information.

Note: The Watch List is only available if the License Plate Recognition feature is installed.

Reviewing the License Plate Matches

1. Open the License Plate Matches dialog box.

   The License Plate Matches dialog box automatically appears whenever license plates from the Watch List are detected. To review matches at a separate time, select **LPR > License Plate Matches...**

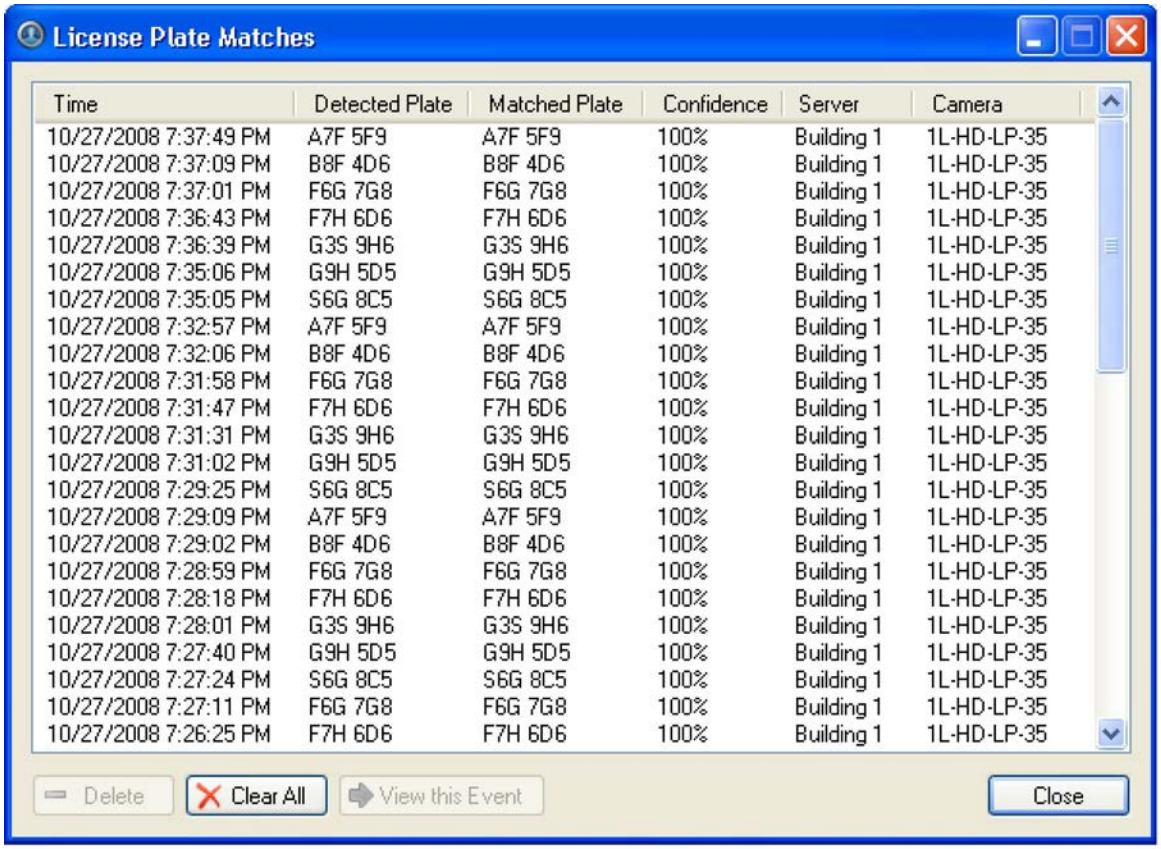

Figure A. License Plate Matches dialog box.

2. Select one of the license plate matches and perform one of the following:
   - Click **View this Event** or double-click the selected license plate to open a snapshot of the detected license plate in a new View.
   - Click **Delete** to delete the license plate from the list.
   - Click **Clear All** to delete the current match list. The list will repopulate as new license plates are detected.
3. Click **Close**.

Search

You can search for recorded video by alarms, license plates, events, thumbnails or POS transactions.

To watch a video overview of the Search features, see *Module 2 - Identifying, Bookmarking, Searching and Exporting Video* in the Avigilon University - End User Stream.

Note: Some features are not displayed if the server does not have the required license, or if you do not have the user permissions to access the feature.

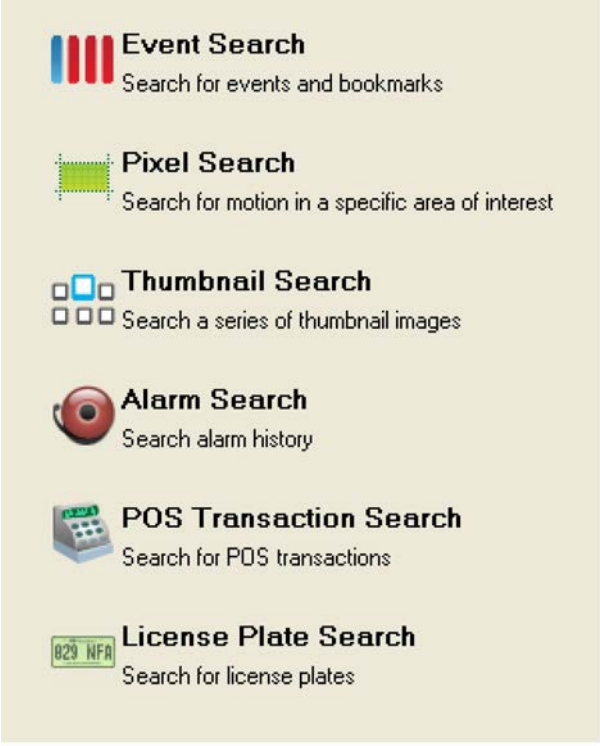

Figure A. Search options

Performing an Event Search

The Event Search allows you to search for a specific motion or digital input event by time range for the selected cameras.

1. Click

to open the Search tab.
2. In the Search tab, select **Event Search**.

   The Search:Event tab is displayed.

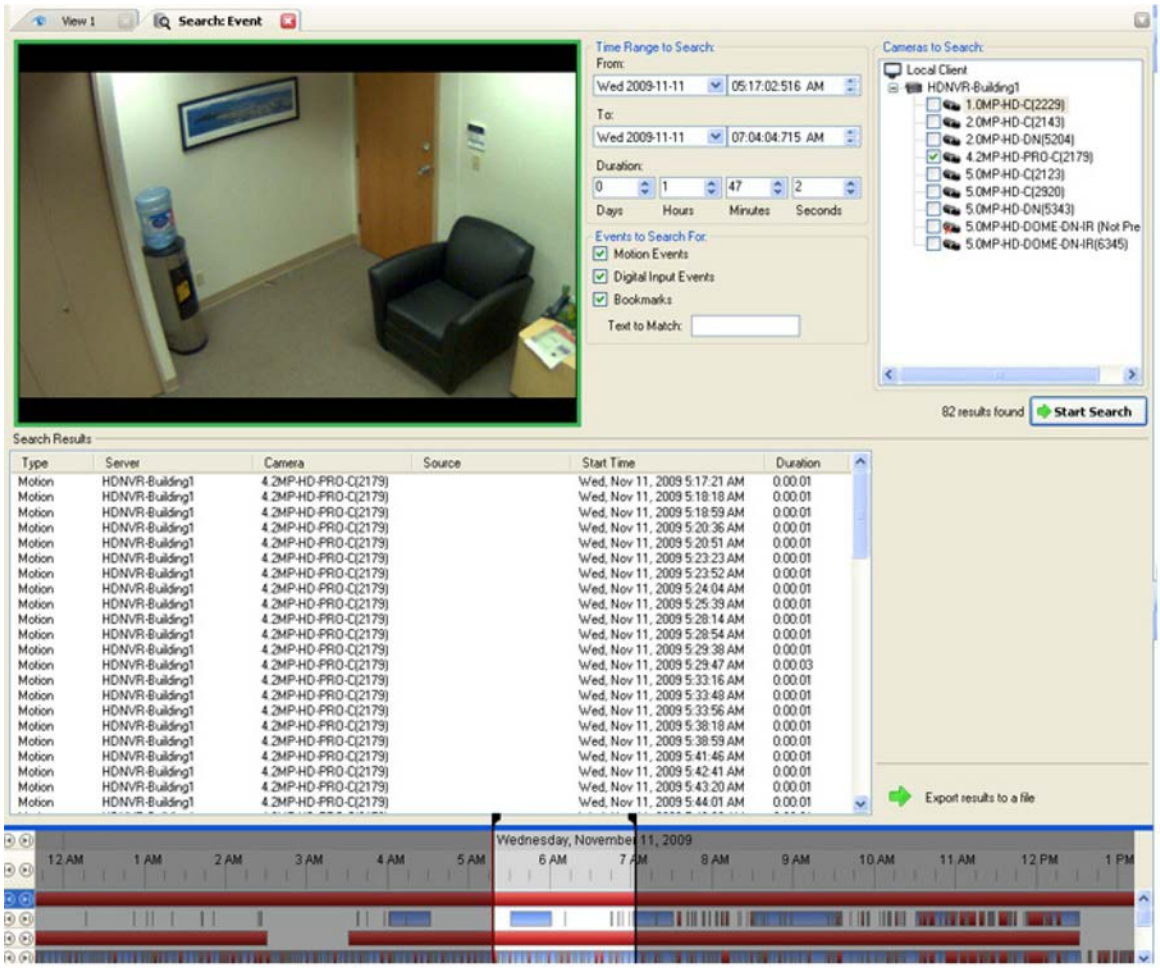

Figure A. Search: Event tab

3. In the Camera to Search area, select all the cameras you want to include in the search.
4. In the Time Range to Search area, set the date and time range of your search. The time range is highlighted on the Timeline by the black time range markers. You can also drag the time range markers to modify the time range.

5. In the Events to Search For area, select the types of events or bookmarks to include in the search.
6. In the Text to Match area, enter text to search for in the titles and descriptions of bookmarks.
7. Click **Start Search**.

Viewing Event Search Results

1. In the Search Results area, select a search result. The event timeline is highlighted and the related video is displayed in the search image panel.
2. Use the Timeline controls to review the event. See Playing Back Recorded Video for more information.
3. If you want to further refine your search, click **Perform a pixel search on this event** to perform a pixel search on the selected result. See Performing a Pixel Search for more information.
4. Click **Export this event** to export the selected event video. See Exporting Recorded Video and Images for more information about the available export settings.
5. To export all listed results, click **Export results to a file** and save the file.

Performing a Pixel Search

The Pixel Search allows you to search for motion events in specific areas of the camera's field of view.

1. Click

to open the Search tab.
2. In the Search tab, select **Pixel Search**.

   The Search:Pixel tab displays.

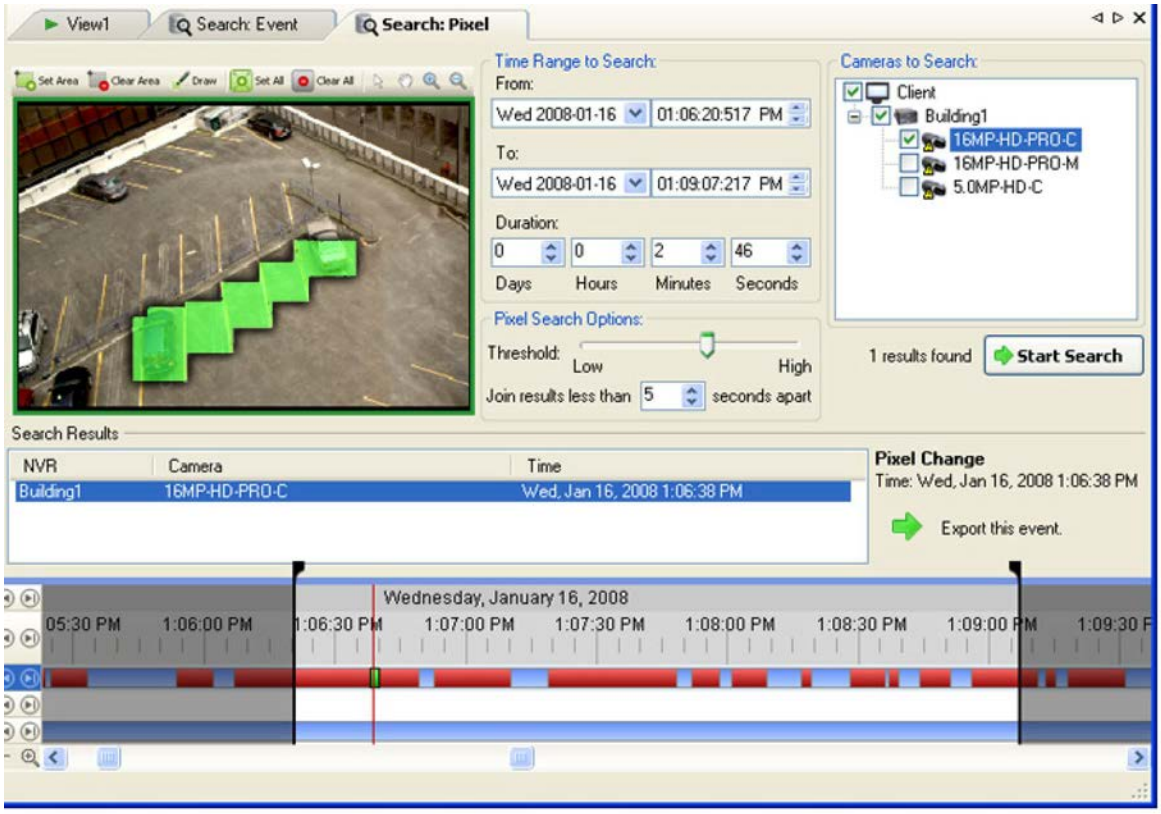

Figure A. Search:Pixel tab

By default, the entire video image is highlighted in green.

3. In the Camera to Search area, select a camera.
4. In the Time Range to Search area, set the date and time range of your search. The time range is highlighted on the Timeline by the black time range markers. You can also drag the time range markers to modify the time range.
5. Define the pixel search region by using the motion detection selection tools above the image panel. The pixel search will be performed in all areas highlighted in green.
6. In the Pixel Search Options area, drag the **Threshold** slider to select the amount of motion required to return a search result.

   The higher the threshold, the greater number of pixels must change before a result is returned.
7. Enter a number in the **Join results less than** field to define the minimum number of seconds between motion events before they are considered separate search results.
8. Click **Start Search**.

Viewing Pixel Search Results

1. In the Search Results area, select a search result. The event timeline is highlighted and the related video is displayed in the search image panel.
2. Use the Timeline controls to review the event. See Playing Back Recorded Video for more information.
3. Click **Export this event** to export the selected event video. See Exporting Recorded Video and Images for more information about the available export settings.
4. To export all listed results, click **Export results to a file** and save the file.

Performing a Thumbnail Search

The Thumbnail Search allows you to search through a specific period of time by viewing a series of thumbnail images.

1. Click

to open the Search tab.
2. In the Search tab, select **Thumbnail Search**.

   The Search:Thumbnails tab displays.

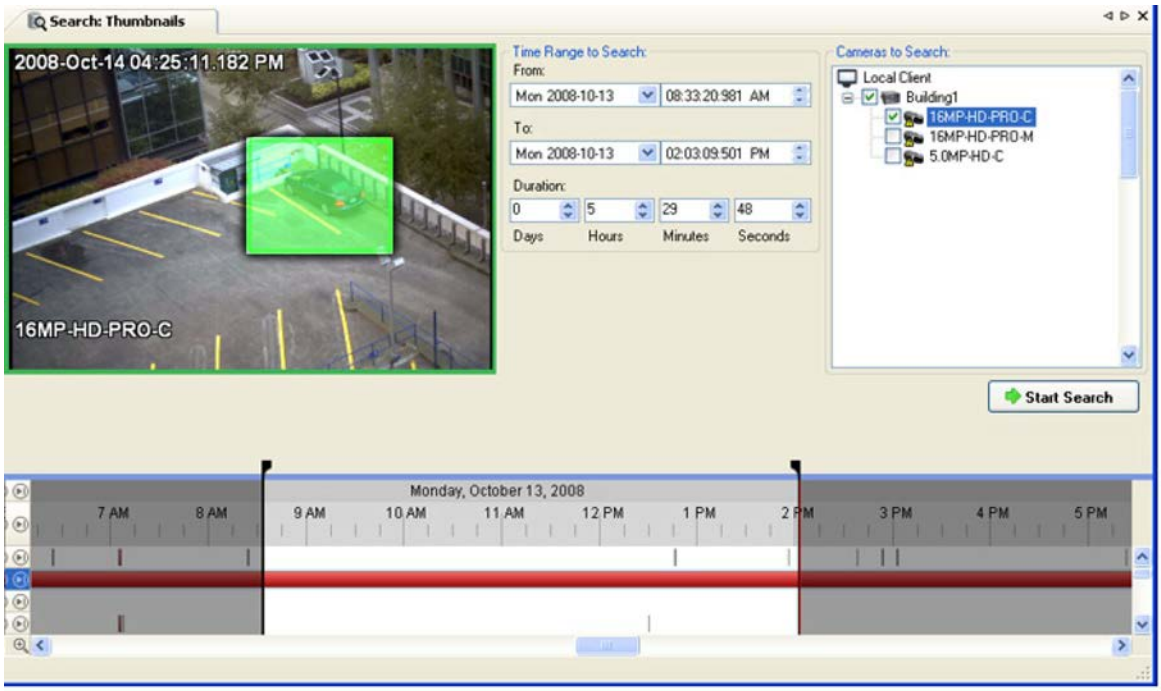

Figure A. Search:Thumbnails tab

3. In the Camera to Search area, select a camera.
4. In the Time Range to Search area, set the date and time range of your search. The time range is highlighted on the Timeline by the black time range markers. You can also drag the time range markers to modify the time range.
5. In the image panel, define the search region by moving the edges of the green overlay. Use this feature if you only want to see thumbnails for a region of the video image instead of the whole field of view.

   The thumbnail search will only be performed on the area highlighted in green.
6. Click **Start Search**.

Viewing Thumbnail Search Results

The search results display thumbnails at equal intervals on the Timeline.

1. To change the size of the search result thumbnails, select **Large Thumbnails**, **Medium Thumbnails**, or **Small Thumbnails** from the drop-down menu above the search results and click **Search Again**.

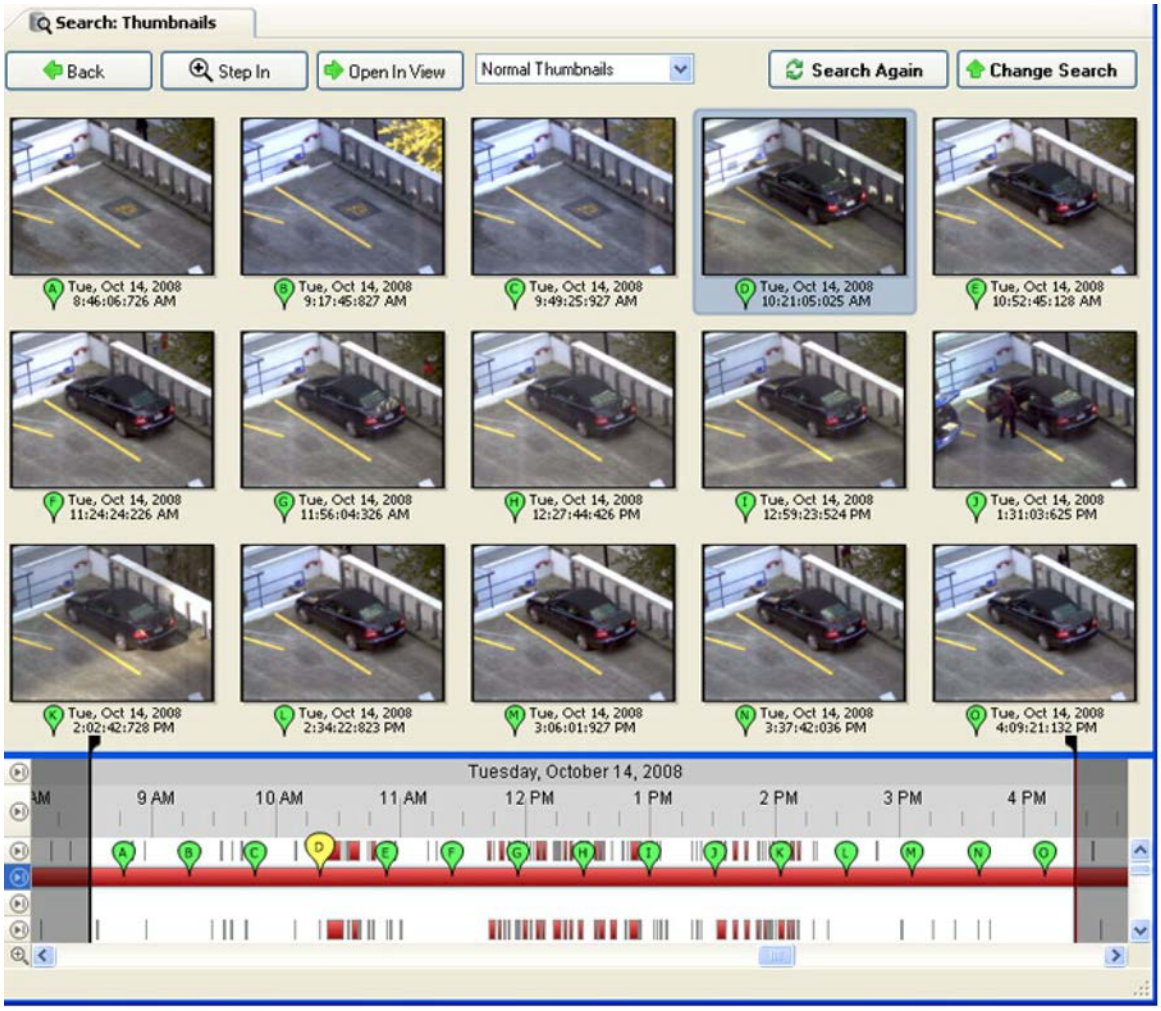

Figure B. Search:Thumbnail results tab

2. Select a thumbnail to highlight the image on the Timeline.
3. Click **Step In**, or double-click the thumbnail to perform another search around the thumbnail.

   Click **Back** to return to the previous results page.
4. Click **Open In View** to open the recorded video in a new View.

Performing an Alarm Search

Alarm search allows you to search for alarm events by time range for the selected alarms.

1. Click

to open the Search tab.

2. In the Search tab, select **Alarm Search**.

   The Search:Alarms tab is displayed.

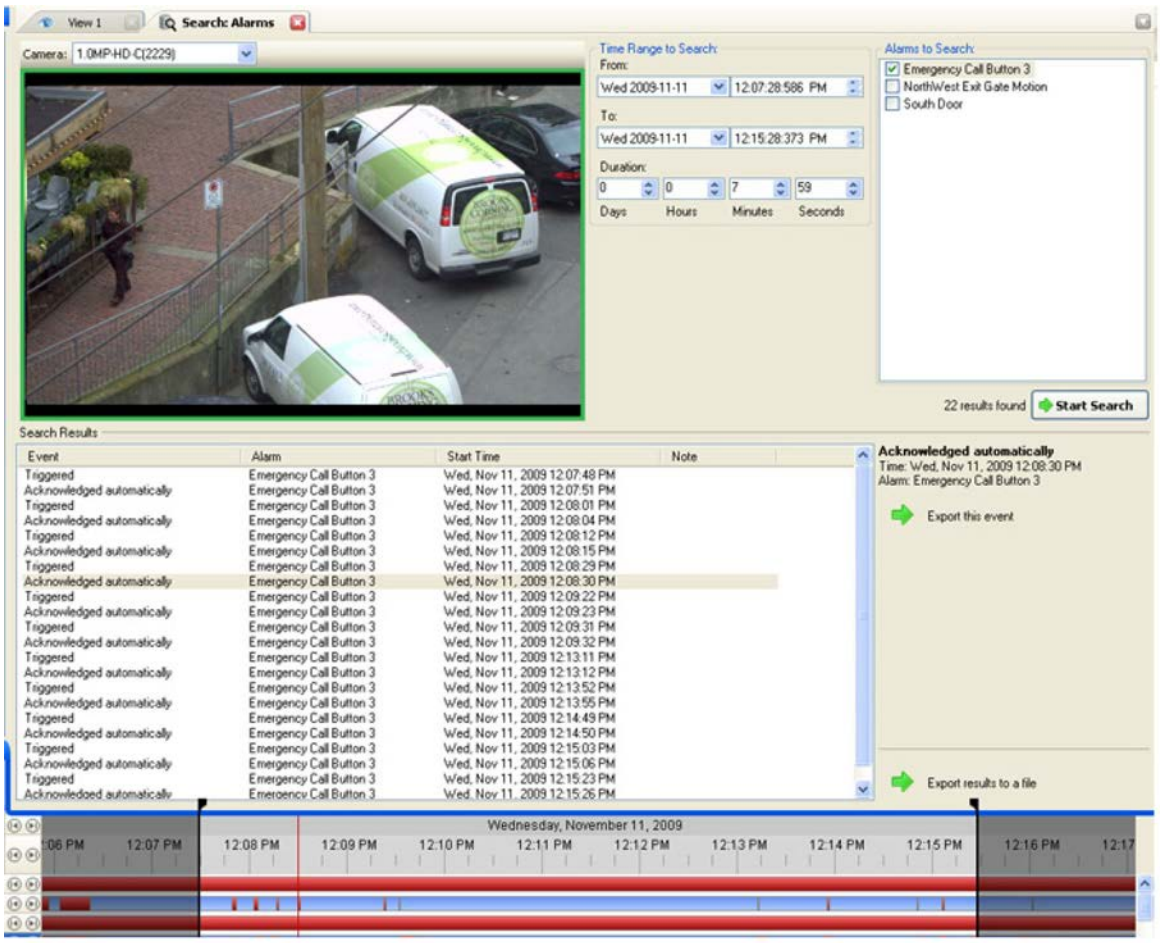

Figure A. Search:Alarms tab

3. In the Alarm to Search list, select all the alarms you would like to include in the alarm search.
4. In the Time Range to Search area, set the date and time range of your search. The time range is highlighted on the Timeline by the black time range markers. You can also drag the time range markers to modify the time range.
5. Click **Start Search**.

Viewing Alarm Search Results

1. In the Search Results area, select a search result. The event timeline is highlighted and the related video is displayed in the search image panel.
2. Use the Timeline controls to review the event. See Playing Back Recorded Video for more information.

3. If the event is linked to multiple cameras, select a camera from the **Camera** drop down list to change the video displayed in the image panel.

4. Click **Export this event** to export the selected event video. See Exporting Recorded Video and Images for more information about the available export settings.

5. To export all listed results, click **Export results to a file** and save the file.

Performing a POS Transaction Search

The POS Transaction Search allows you to search for POS transactions by transaction data source, content in the raw transaction data, and time range.

1. Click

to open the Search tab.

2. In the Search tab, select **POS Transactions Search**.

   The Search: POS Transactions tab is displayed.

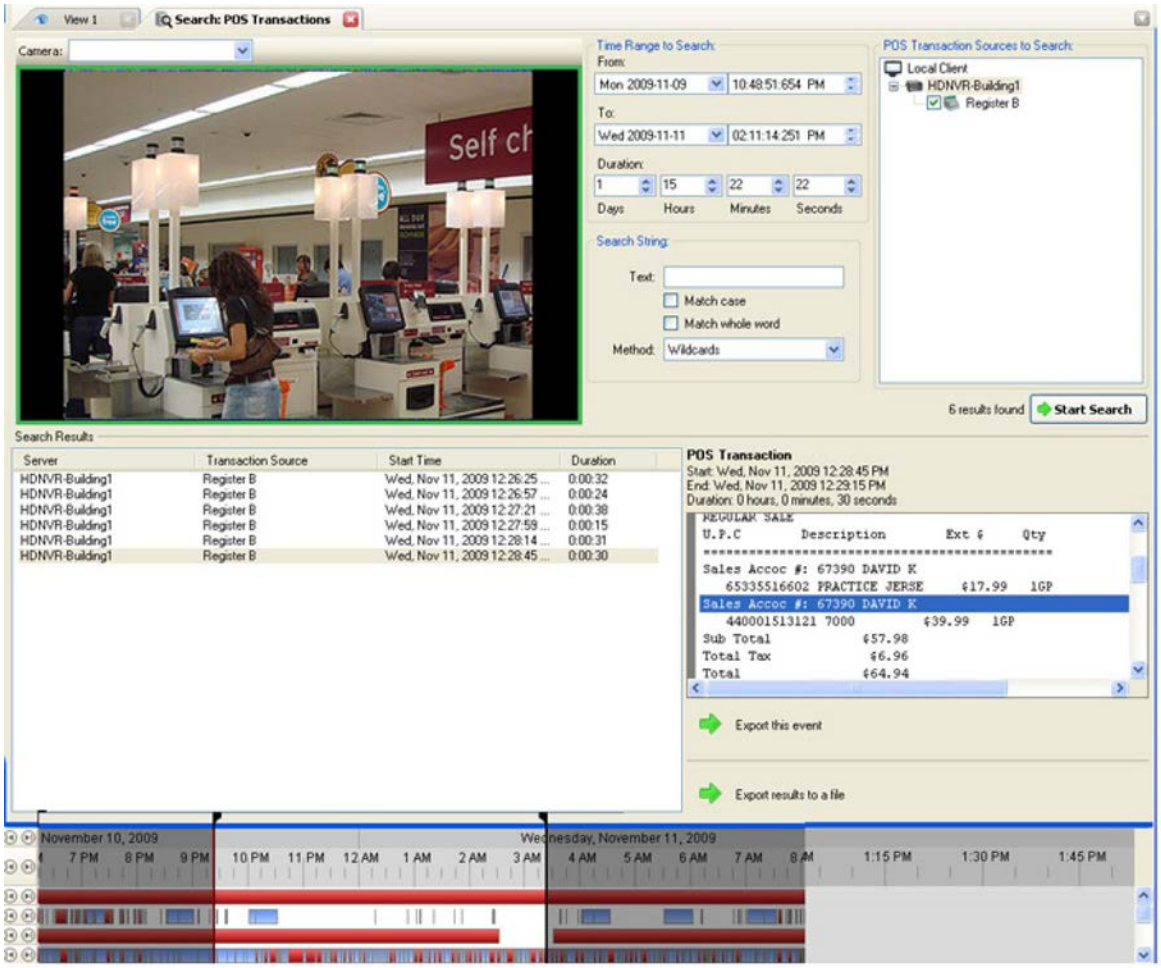

Figure A. Search:POS Transactions tab

3. In the POS Transaction Sources to Search area, select all the POS transaction sources you would like to include in the search.
4. In the Time Range to Search area, set the date and time range of your search. The time range is highlighted on the Timeline by the black time range markers. You can also drag the time range markers to modify the time range.
5. In the Search Text area, enter any text you want to search for, then select **Match case** and/or **Match whole word**, and choose a search method.

   Leave the **Text** field blank to find all transactions.
6. Click **Start Search**.

Viewing POS Transaction Search Results

1. In the Search Results area, select a search result. The event timeline is highlighted and the related video is displayed in the search image panel.
2. Use the Timeline controls to review the event. See Playing Back Recorded Video for more information.
3. If the event is linked to multiple cameras, select a camera from the **Camera** drop down list to change the video displayed in the image panel.
4. Click **Export this event** to export the selected event video. See Exporting Recorded Video and Images for more information about the available export settings.
5. To export all listed results, click **Export results to a file** and save the file.

Performing a License Plate Search

The License Plate Search allows you to search for specific license plates detected by the selected cameras. You can search for license plates not listed in the Watch List.

Note: The License Plate Search is only available if the License Plate Recognition feature is installed.

1. Click

to open the Search tab.
2. In the Search tab, select **License Plate Search**.

   The Search: License Plates tab is displayed.

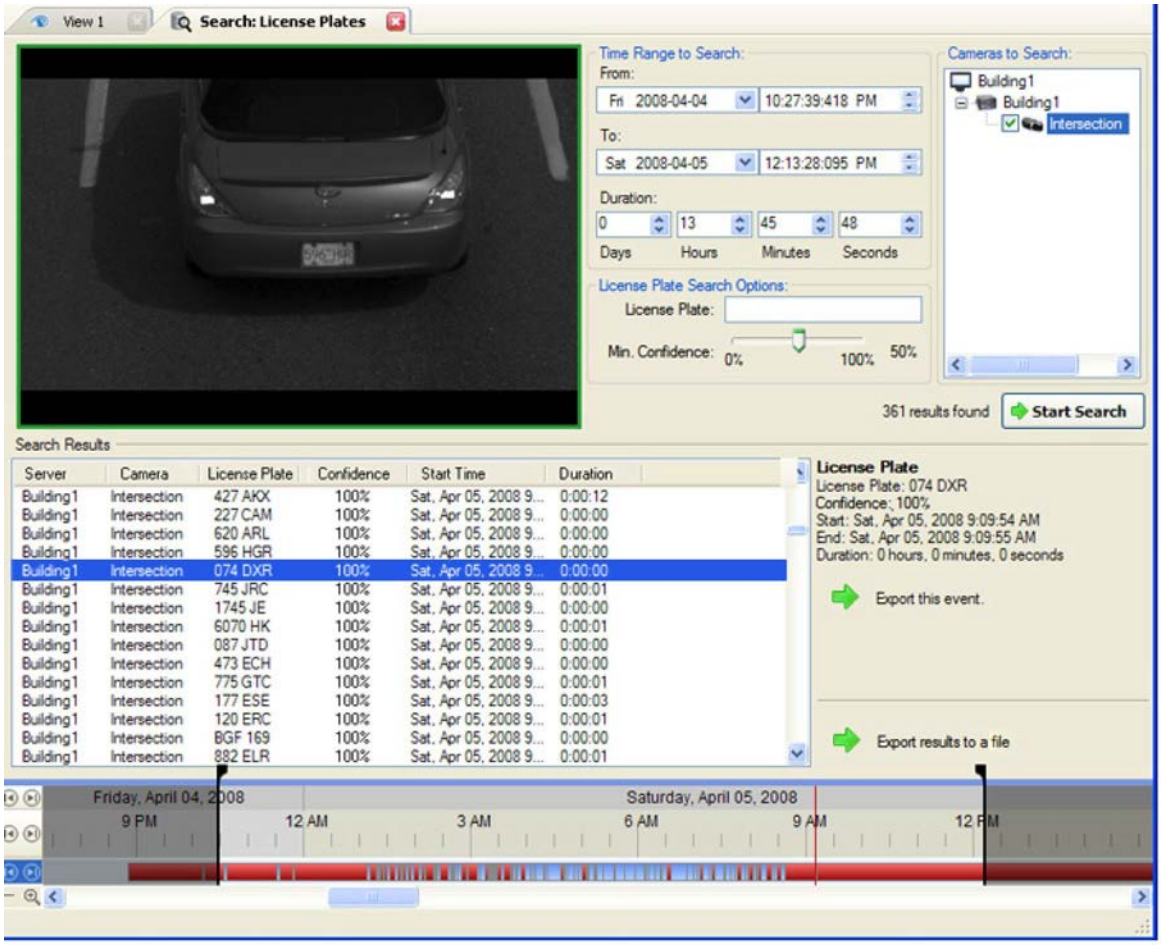

Figure A. Search: License Plates tab

3. In the Camera to Search area, select all the cameras you want to include in the search.
4. In the Time Range to Search area, set the date and time range of your search. The time range is highlighted on the Timeline by the black time range markers. You can also drag the time range markers to modify the time range.
5. In the License Plate Search Options area, enter the license plate number and minimum confidence for a match.
6. Click **Start Search**.

Viewing LPR Search Results

1. In the Search Results area, select a search result. The event timeline is highlighted and the related video is displayed in the search image panel.
2. Use the Timeline controls to review the event. See Playing Back Recorded Video for more information.

3. If the event is linked to multiple cameras, select a camera from the **Camera** drop down list to change the video displayed in the image panel.
4. Click **Export this event** to export the selected event video. See Exporting Recorded Video and Images for more information about the available export settings.
5. To export all listed results, click **Export results to a file** and save the file.

Export

You can export video and still images. You can specify a number of options to ensure the exported files are appropriate for your needs.

To watch a video overview of the Export features, see *Module 2 - Identifying, Bookmarking, Searching and Exporting Video* in the Avigilon University - End User Stream.

Note: Some features are not displayed if the server does not have the required license, or if you do not have the user permissions to access the feature.

Saving a Snapshot of an Image

A Snapshot allows you to export a single frame in a video. You can specify the file format and various options, like overlays and resolution.

1. Open the snapshot Export tab:

   - In the image panel, click the **Save Snapshot** icon.
   - Right-click the image panel and select **Save Snapshot**.

   The snapshot Export tab is displayed.

Figure A. Export tab for Snapshot export

2. In the Export Options area, select the image export format from the **Format** drop down list: **PNG**, **JPEG**, **TIFF**, **PDF**, **Print**, or **Native** format.

3. For the selected export image format, define your preferences:

Format	Image options
Native **Note:** The Native format requires the Avigilon Control Center Player to view.	This is the recommended export format because the exported image maintains original compression and can be authenticated against tampering in the Avigilon Control Center Player. ▪ Select the **Export the Control Center Player Installer** check box if you want a copy of the Avigilon Control Center Player to be distributed with your native image file.
PNG	1. In the **Resolution** field, select a resolution for the video image. You can manually enter the resolution or click the drop down arrow to select a standard resolution. **Note:** The **Resolution** field automatically maintains the image aspect ratio. 2. Click **Change Image Region...** to change the region of the video image that is exported.

	In the Change Image Region dialog box, modify the size and position of the green overlay, then click **OK**. The Preview image panel will show the modified image region. 3. Select the required image overlays: **Timestamp**, **Camera name**, and **Camera location**. 4. Click **Display Adjustments** to adjust the Gamma, Black Level and/or White Level.
JPEG	1. In the **Compression** field, select a compression level. 2. Set the image **Resolution**. 3. Click **Change Image Region** to only export a specific region of the image. 4. Select the required image overlays. 5. Click **Display Adjustments** to modify the image quality.
TIFF	1. Set the image **Resolution**. 2. Click **Change Image Region** to only export a specific region of the image. 3. Select the required image overlays. 4. Click **Display Adjustments** to modify the image quality.
Print	1. Click **Change Image Region** to only export a specific region of the image. 2. Click **Printer Settings...** to change the selected printer and paper size. 3. Select the required image overlays. 4. Click **Add Export Notes...** to add notes about the exported image. The notes are printed below the exported image. 5. Click **Display Adjustments** to modify the image quality.
PDF	1. Click **Change Image Region** to only export a specific region of the image. 2. Select the required image overlays.

	3. Click **Add Export Notes...** to add notes about the exported image. 4. Click **Display Adjustments** to modify the image quality.

4. Click **Start Export**.
5. In the Save As dialog box, name the export file and click **Save**.

   The Preview area displays the video stream you are exporting.
6. When the export is complete, click **OK**.

Exporting Live Images

The Live Export tab exports live video as a series of still images. You can specify the file format, and set related options like overlays and resolution.

1. Select **File > Live Export...**.

   The Live Export tab is displayed.

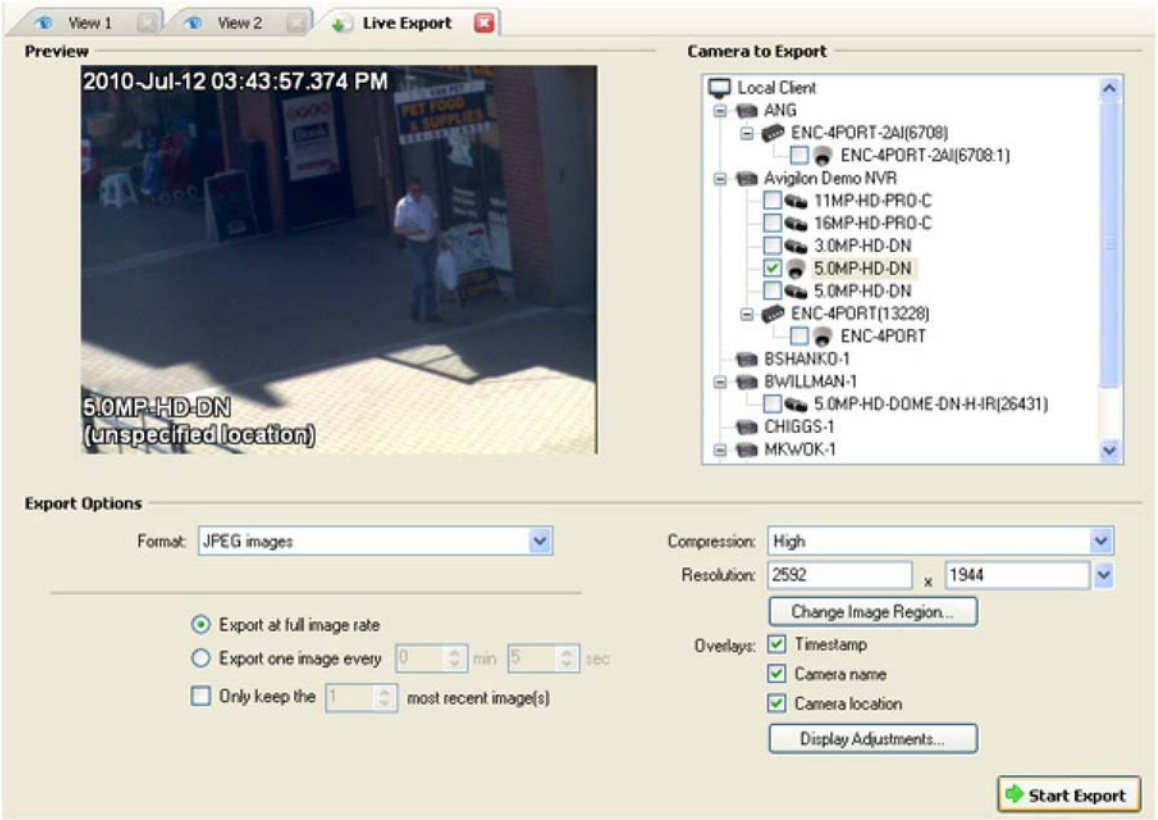

Figure A. Live Export tab

2. In the Camera to Export list, select the camera video you want to export.
3. In the Export Options area, select one of the following export formats in the **Formats** drop down list: **PNG**, **JPEG**, or **TIFF**.
4. Set the export image rate:

Option	Description
Export at full image rate	Select this option to export the live stream at the full image rate.
Export one image every __ min __sec	Select this option to control the time interval between each exported image. For example, if you enter *5* min. *0* sec., only one image will be exported every 5 minutes.
Only keep the __ most recent image(s)	Select this check box to limit the number of images stored. Be aware that if you do not limit the number of images stored, the export will continue until your hard drive is full.

5. (JPEG images only)

   In the **Compression** field, select a compression level.
6. In the **Resolution** field, select a resolution for the video image. You can manually enter the resolution or click the drop down arrow to select a standard resolution.

   Note: The **Resolution** field automatically maintains the image aspect ratio.
7. Click **Change Image Region...** to change the region of the video image that is exported.

   In the Change Image Region dialog box, modify the size and position of the green overlay, then click **OK**. The Preview image panel will show the modified image region.
8. Select the required image overlays: **Timestamp**, **Camera name**, and **Camera location**.
9. Click **Display Adjustments** to adjust the Gamma, Black Level and/or White Level.
10. Click **Start Export**.
11. In the Save As dialog box, name the export file and click **Save**.

    The Preview area displays the video stream you are exporting.

    Note: The live export will continue until stopped.
12. Click **Stop Export** to stop the export.

Exporting Recorded Video and Images

You can export recorded video and still images that are stored on the server.

Note: Only recorded video can be exported in video format.

Accessing the Export Tab

The Export tab can be accessed in any of the following ways:

- Select **File > Export**.
- On the toolbar, click

.
- When searching for a specific video image, select a search result and click **Export this event**.
- When viewing bookmarked video, right-click a bookmark on the Timeline and select **Export**.

Exporting Native Video

When you export video files, you can choose to export the video in the Native (AVE) format.

The AVE format is the recommended format for exporting video because you can export video from multiple cameras in a single file, and the video maintains its original compression. AVE video can be played in the Avigilon Control Center Player, where the video can be authenticated against tampering and be re-exported to other formats.

1. Click

to open the Export tab. For more information, see Accessing the Export Tab.

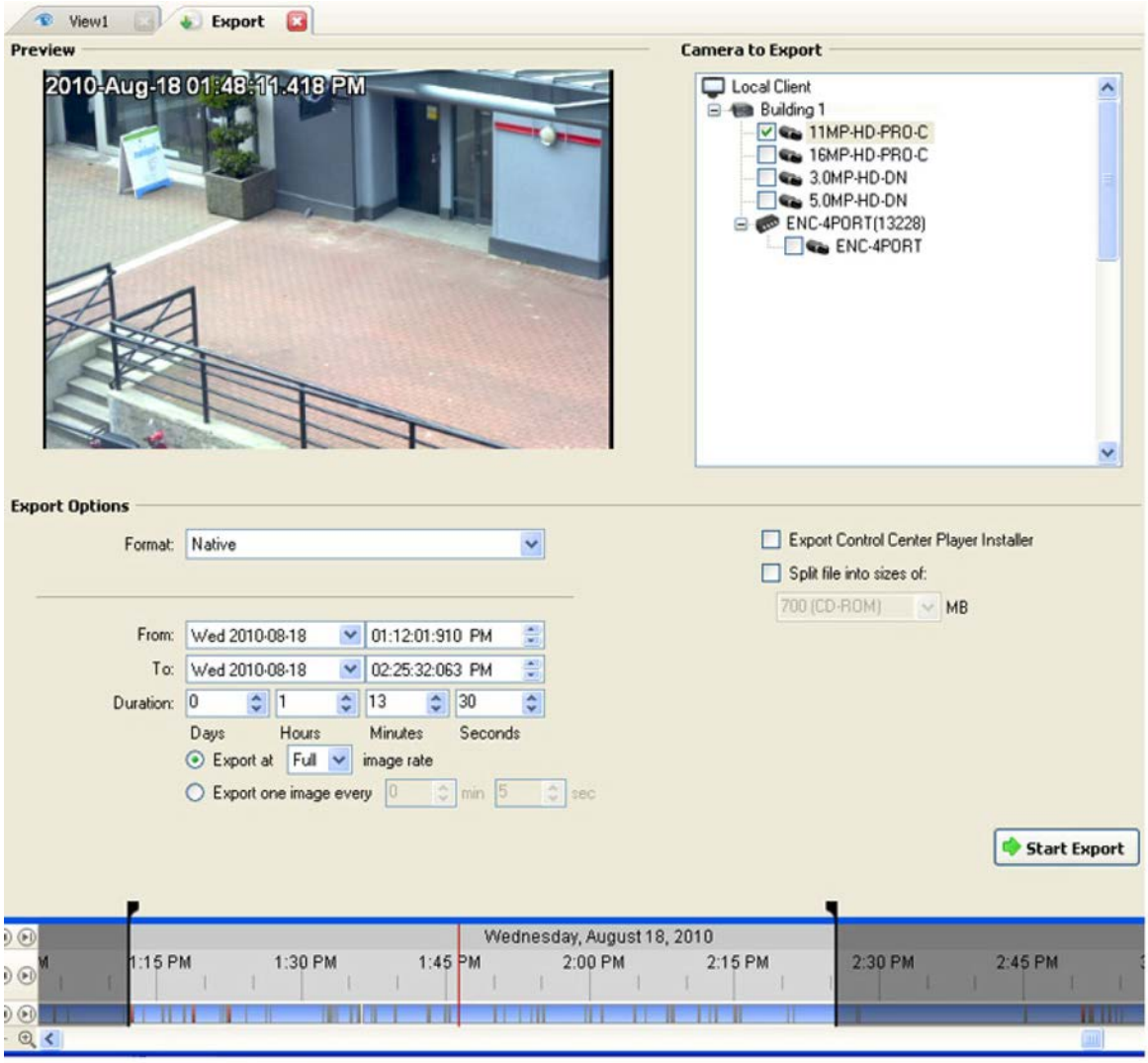

Figure A. Export tab for recorded video export

2. In the **Format** drop down list, select **Native**.
3. In the Camera to Export list, select all the camera video you want to export.
4. Enter the time range in the **From**, **To**, **Duration** fields. The time range is highlighted on the Timeline by black time range markers. You can also drag the time range markers to modify the time range.
5. Set the export image rate:

Option	Description
Export at __ image rate	Select this option to control how many images per second are exported. For example, the video is streaming at 30 images per second. If you select **1/2**, only 15 images for that second will be exported.

Export one image every __ min __sec	Select this option to control the time interval between each exported video image. For example, if you enter *5* min. *0* sec., only one image will be exported every 5 minutes.

6. Select the **Export the Control Center Player Installer** if you want a copy of the Avigilon Control Center Player to distribute with the AVE video file.
7. Select the **Split file into sizes of:** check box to split the exported file into smaller files so the exported files can be stored on optical media, like a CD or DVD.
8. Click **Start Export**.
9. In the Save As dialog box, name the export file and click **Save**.

   The Preview area displays the video stream you are exporting.
10. When the export is complete, click **OK**.

Exporting AVI Video

When you export video files, you can choose to export the video in Audio Video Interleave (AVI) format.

1. Click

to open the Export tab. For more information, see Accessing the Export Tab.

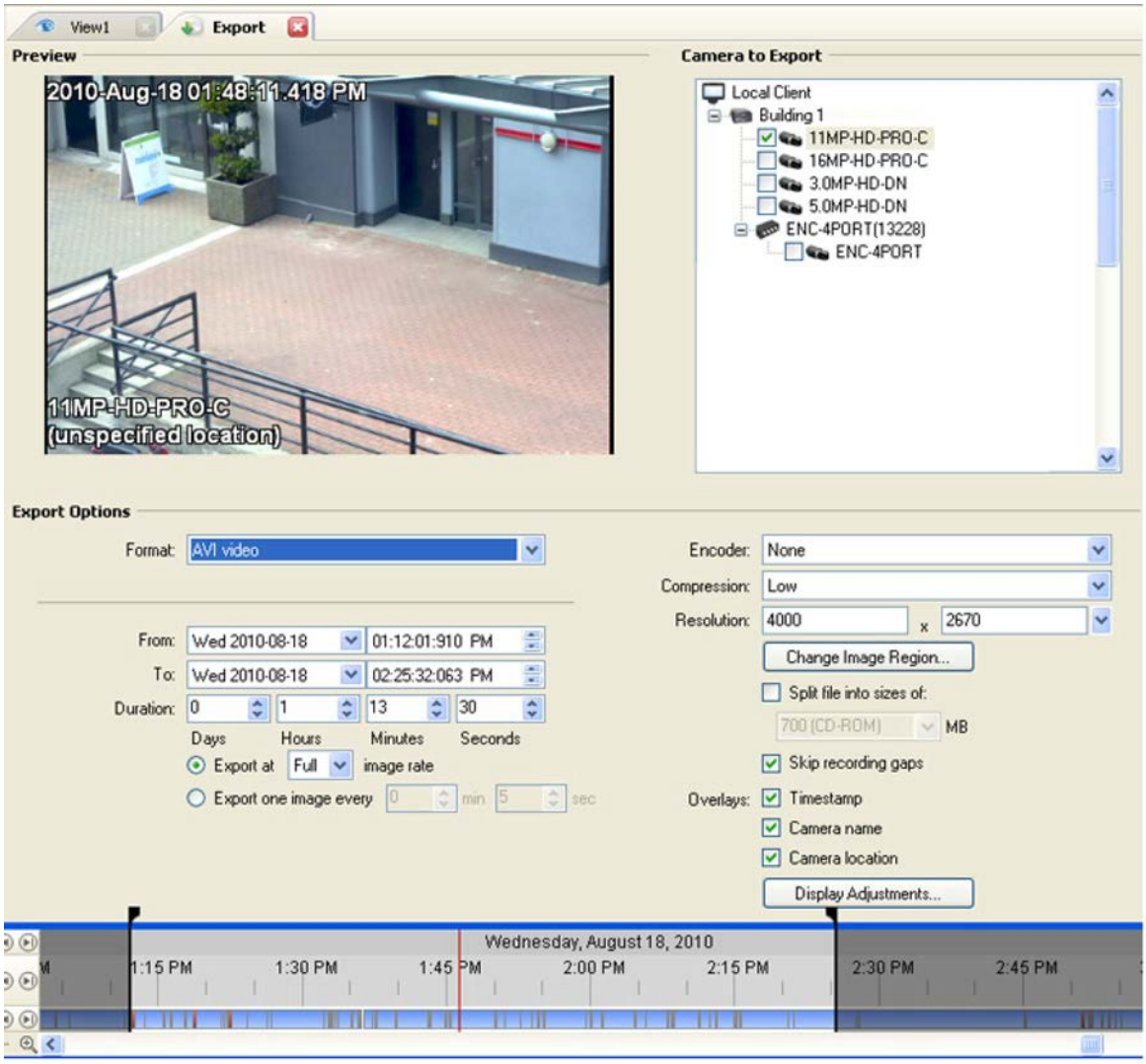

Figure A. Export tab for recorded video export

2. In the **Format** drop down list, select **AVI video**.
3. In the Camera to Export list, select all the camera video you want to export.
4. Enter the time range in the **From**, **To**, **Duration** fields. The time range is highlighted on the Timeline by black time range markers. You can also drag the time range markers to modify the time range.
5. Set the export image rate:

Option	Description
Export at __ image rate	Select this option to control how many images per second are exported. For example, the video is streaming at 30 images per second. If you select **1/2**, only 15 images for that second will be exported.

Export one image every __ min __sec	Select this option to control the time interval between each exported video image. For example, if you enter *5* min. *0* sec., only one image will be exported every 5 minutes.

6. In the **Encoder** field, select the compression used. The **VC-1 (Windows Media Video)** compression is included by default because it is tailored for high-resolution AVI encoding.
7. In the **Compression** field, select a compression level.
8. In the **Resolution** field, select a resolution for the video image. You can manually enter the resolution or click the drop down arrow to select a standard resolution.

   Note: The **Resolution** field automatically maintains the image aspect ratio.

   For high resolution video (11MP or 16MP) the greatest resolution option will be less than the camera's actual resolution because most media players cannot play high resolution AVI files.
9. Select the **Split file into sizes of:** check box to split the exported file into smaller files so the exported files can be stored on optical media, like a CD or DVD.
10. Click **Change Image Region...** to change the region of the video image that is exported.

    In the Change Image Region dialog box, modify the size and position of the green overlay, then click **OK**. The Preview image panel will show the modified image region.
11. Select the **Skips recording gaps** check box to avoid pauses in the video caused by gaps in the recorded video file.
12. Select the required image overlays: **Timestamp**, **Camera name**, and **Camera location**.
13. Click **Display Adjustments** to adjust the Gamma, Black Level and/or White Level.
14. Click **Start Export**.
15. In the Save As dialog box, name the export file and click **Save**.

    The Preview area displays the video stream you are exporting.
16. When the export is complete, click **OK**.

Exporting PNG, JPEG or TIFF Images

When you export recorded video, you can choose to export the video as still images in PNG, JPEG, or TIFF format.

1. Click

to open the Export tab. For more information, see Accessing the Export Tab.

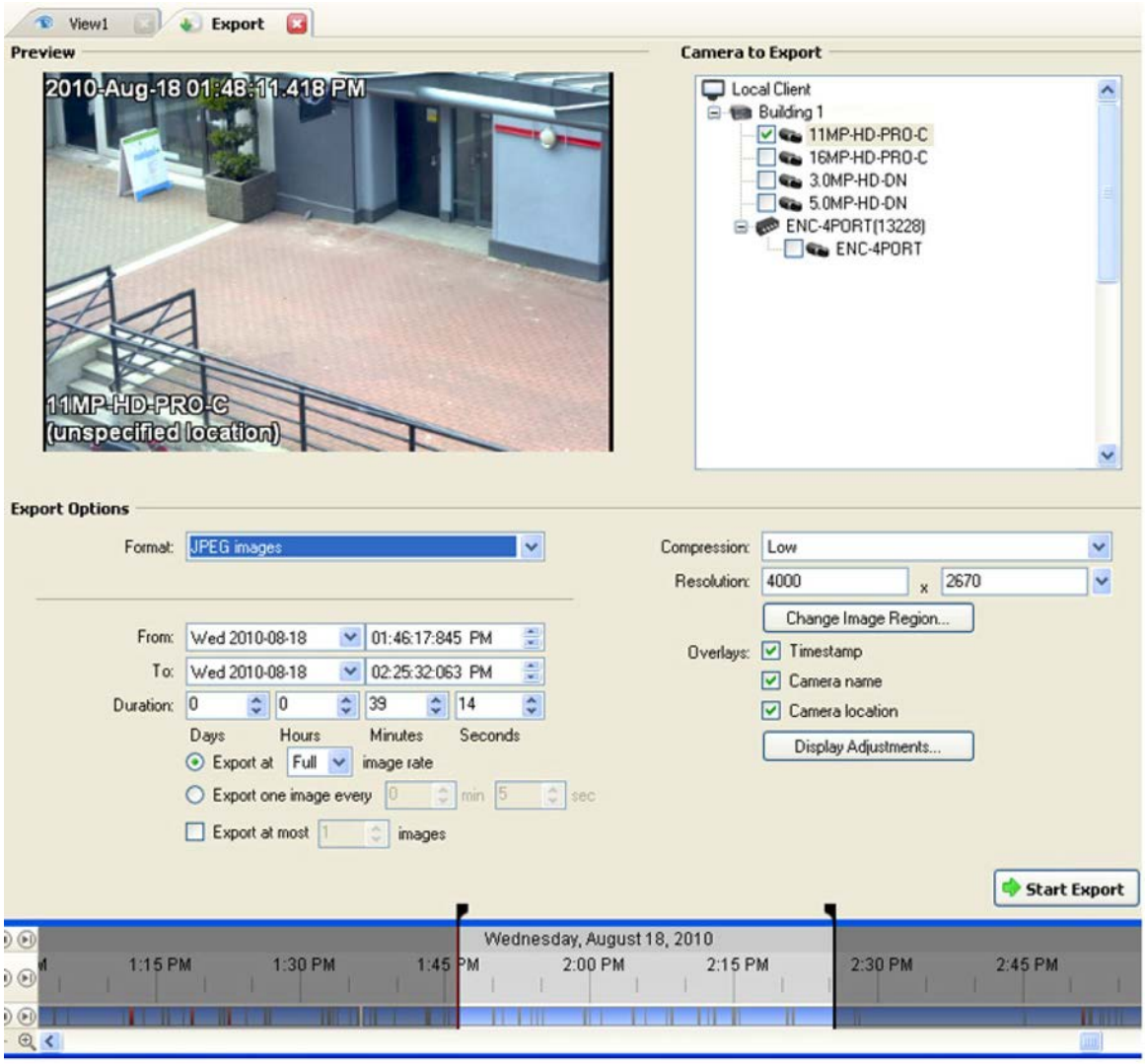

Figure A. Export tab for still image export

2. In the **Format** drop down list, select one of the following export formats: **PNG Images**, **JPEG Images**, or **TIFF Images**.
3. In the Camera to Export list, select all the camera video you want to export.
4. Enter the time range in the **From**, **To**, **Duration** fields. The time range is highlighted on the Timeline by black time range markers. You can also drag the time range markers to modify the time range.
5. Set the export image rate:

Option	Description
Export at __ image rate	Select this option to control how many images per second are exported. For example, the video is streaming at 30 images per second. If you select **1/2**, only 15

	images for that second will be exported.
Export one image every __ min __sec	Select this option to control the time interval between each exported video image. For example, if you enter *5* min. *0* sec., only one image will be exported every 5 minutes.

6. Select the **Export at most __ images** check box to limit the number of images that is exported. Enter the number of images you want exported.

   If this option is selected, the export will stop either when the number of specified images has been exported or when the specified time range has been reached.

7. (JPEG only)

   In the **Compression** field, select a compression level.

8. In the **Resolution** field, select a resolution for the video image. You can manually enter the resolution or click the drop down arrow to select a standard resolution.

   Note: The **Resolution** field automatically maintains the image aspect ratio.

9. Click **Change Image Region...** to change the region of the video image that is exported.

   In the Change Image Region dialog box, modify the size and position of the green overlay, then click **OK**. The Preview image panel will show the modified image region.

10. Select the required image overlays: **Timestamp**, **Camera name**, and **Camera location**.

11. Click **Display Adjustments** to adjust the Gamma, Black Level and/or White Level.

12. Click **Start Export**.

13. In the Save As dialog box, name the export file and click **Save**.

    The Preview area displays the video stream you are exporting.

14. When the export is complete, click **OK**.

Exporting PDF and Print Images

When you export recorded video, you can choose to export the video as still images for printing or in PDF format.

1. Click

to open the Export tab. For more information, see Accessing the Export Tab.

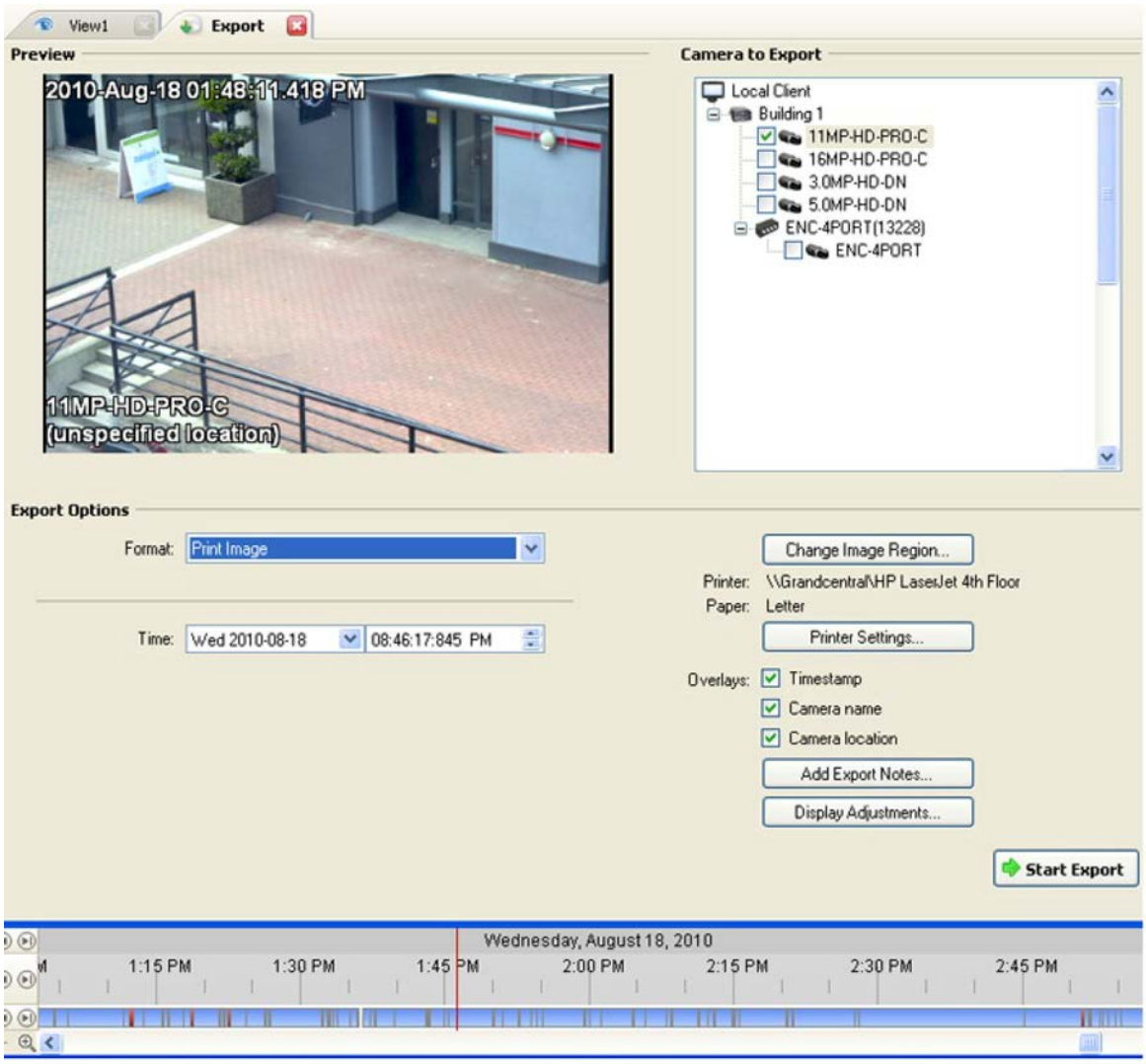

Figure A. Export tab for still image export

2. In the **Format** drop down list, select one of the following export formats: **Print Image** or **PDF File**.
3. In the Camera to Export list, select all the camera video you want to export.
4. In the **Time** field, enter the exact date and time of the video image you want to export.
5. Click **Change Image Region...** to change the region of the video image that is exported.

   In the Change Image Region dialog box, modify the size and position of the green overlay, then click **OK**. The Preview image panel will show the modified image region.
6. (Print Image only) Click **Print Settings** to change the printer and paper size that the image is printed on.
7. Select the required image overlays: **Timestamp**, **Camera name**, and **Camera location**.
8. Click **Add Export Notes** to add notes about the exported image. The notes are added below the image.

9. Click **Display Adjustments** to adjust the Gamma, Black Level and/or White Level.
10. Click **Start Export**.
11. In the Save As dialog box, name the export file and click **Save**.

    The Preview area displays the video stream you are exporting.
12. When the export is complete, click **OK**.

Exporting WAV Audio

If a video contains audio, the audio is exported with the video. If required, you can choose to only export the audio file.

Note: Audio recording requires an Audio Channel License. Without an audio license, no audio would have been recorded with the video.

1. Click

to open the Export tab. For more information, see Accessing the Export Tab.

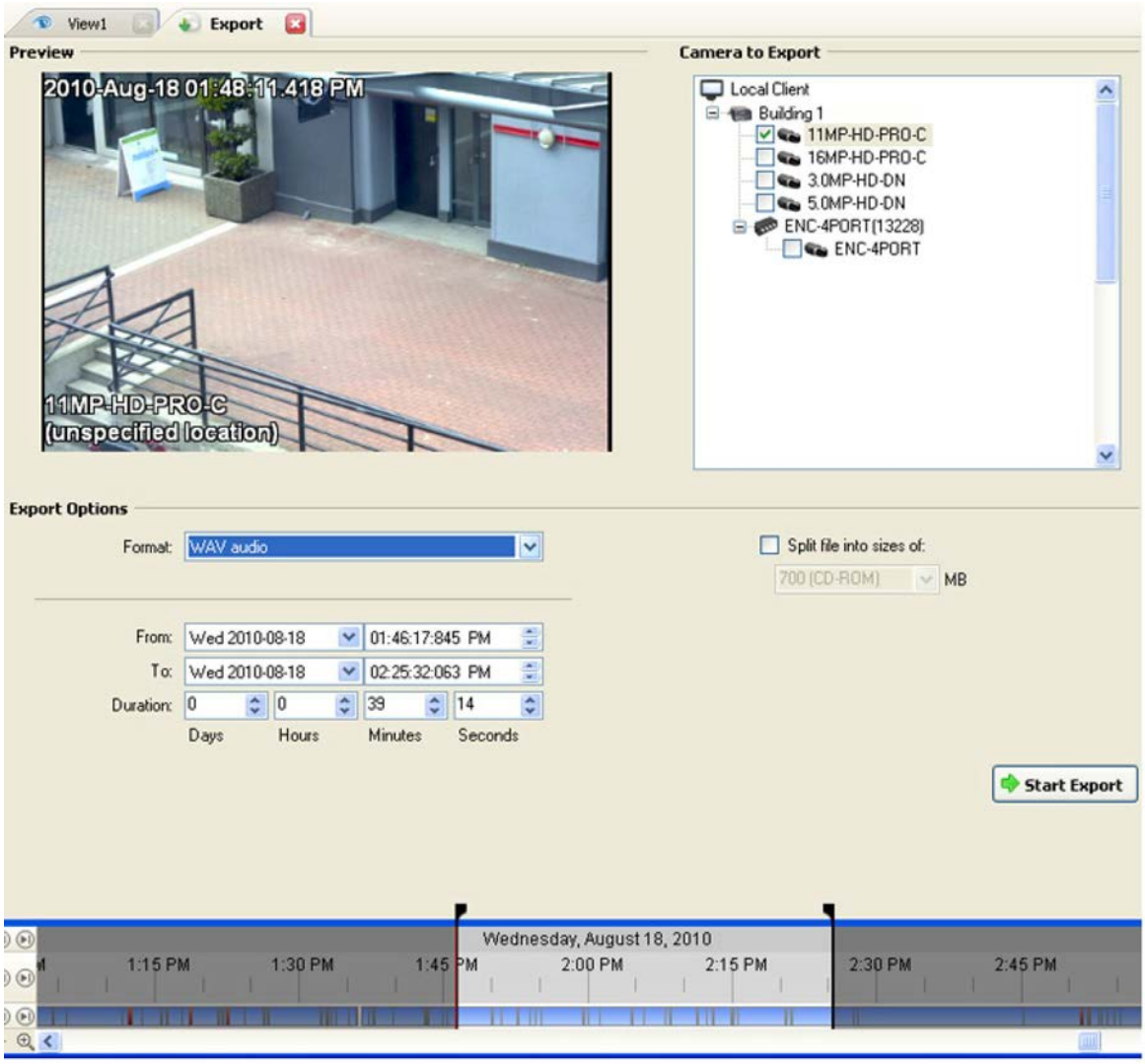

Figure A. Export tab for audio export

2. In the **Format** drop down list, select **WAV**.
3. In the Camera to Export list, select all the camera video you want to export.
4. Enter the time range in the **From**, **To**, **Duration** fields. The time range is highlighted on the Timeline by black time range markers. You can also drag the time range markers to modify the time range.
5. Click **Start Export**.
6. In the Save As dialog box, name the export file and click **Save**.

   The Preview area displays the video linked with the audio you are exporting.
7. When the export is complete, click **OK**.

Backup

Video can be automatically backed up on a schedule that is defined in the server Scheduled Backup settings. However, you can manually backup video as needed from the Backup tab.

For information on configuring the Scheduled Backup settings, see Changing Scheduled Backup Settings.

Note: Some features are not displayed if the server does not have the required license, or if you do not have the user permissions to access the feature.

Backing Up Recorded Video On Demand

The backup files are stored in a backup folder set by the Avigilon Control Center Admin Tool. See the *Avigilon Control Center Server User Guide* for information about changing the backup folder.

1. Select **File > Backup...**

   The Backup tab is displayed.

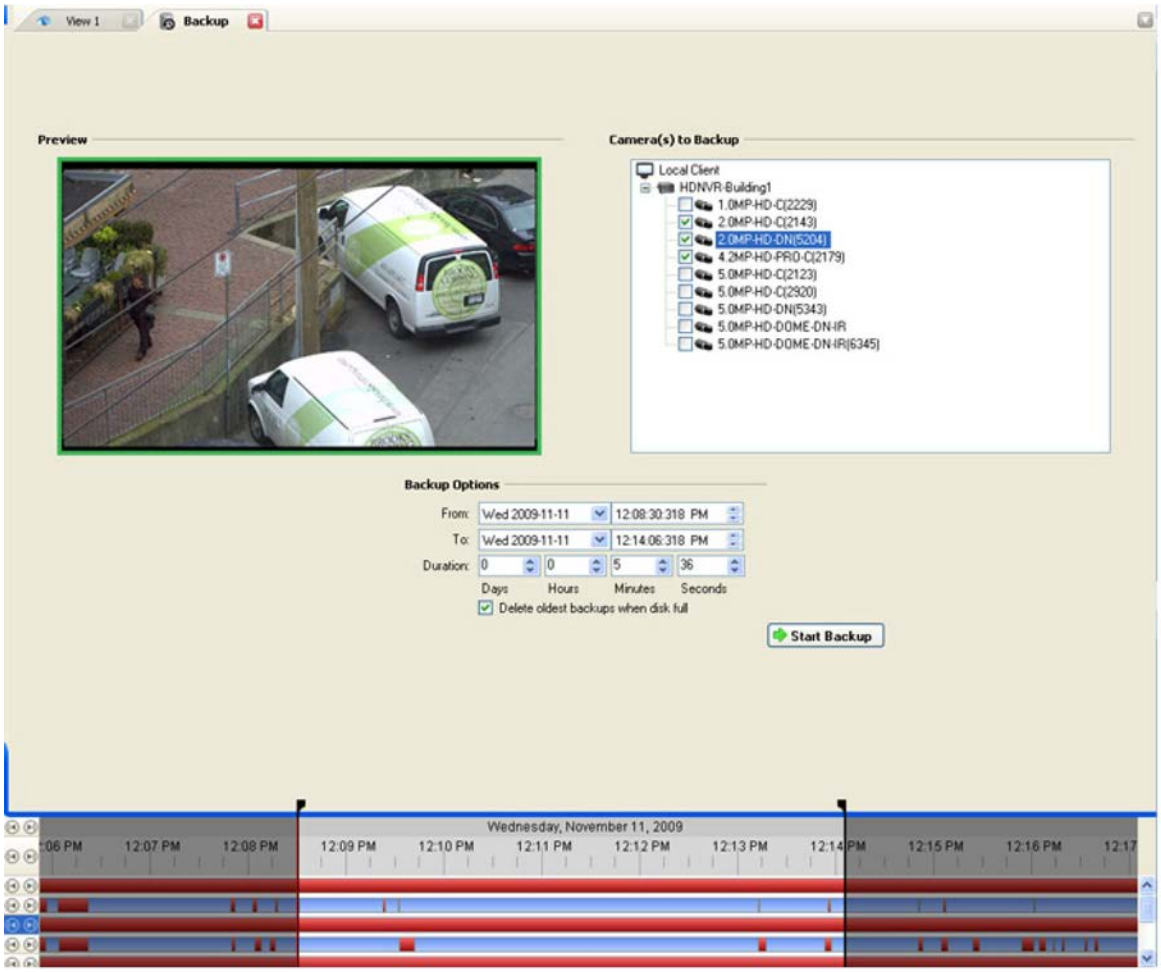

Figure A. Backup tab

2. In the Camera(s) to Backup area, select all the cameras you want to backup
3. In the Backup Options area, set the time range you want to backup. The time range is highlighted on the Timeline by the black time range markers. You can also drag the time range markers to modify the time range.
4. Ensure the **Delete oldest backups when disk full** check box is selected.
5. Click **Start Backup**.

   Video is always backed up in the Avigilon Backup (AVK) format. You can review the backed up video in the Avigilon Control Center Player.

Appendix

Accessing the Web Client

You can access your Avigilon High Definition Surveillance System through the Web Client. The Web Client is a simplified version of the Client software. It allows you to monitor your surveillance system, search for video events and export recorded video outside the Client software. Be aware that you cannot modify any system settings through the Web Client.

You can access the Web Client through the Internet Explorer web browser.

Note: The Web Client is only compatible with Internet Explorer.

To access the Web Client, you need the Avigilon server's IP address and port number. This information is available in the Avigilon Control Center Admin Tool installed on the server. See the *Avigilon Control Center Server User Guide* for more information.

1. To access the Web Client, open Internet Explorer and enter the following address: http://<*server ip address*>:<*port number*>/ (For example, http://192.168.2.62:50083/)

   If you have not accessed the Web Client before, you may be prompted to install the required software before the Web Client will open.

2. When the login screen appears, enter your username and password for the server.

The Web Client is opened in your browser, and you can access the video and cameras connected to the server.

Note: You can only access one server at a time through the Web Client.

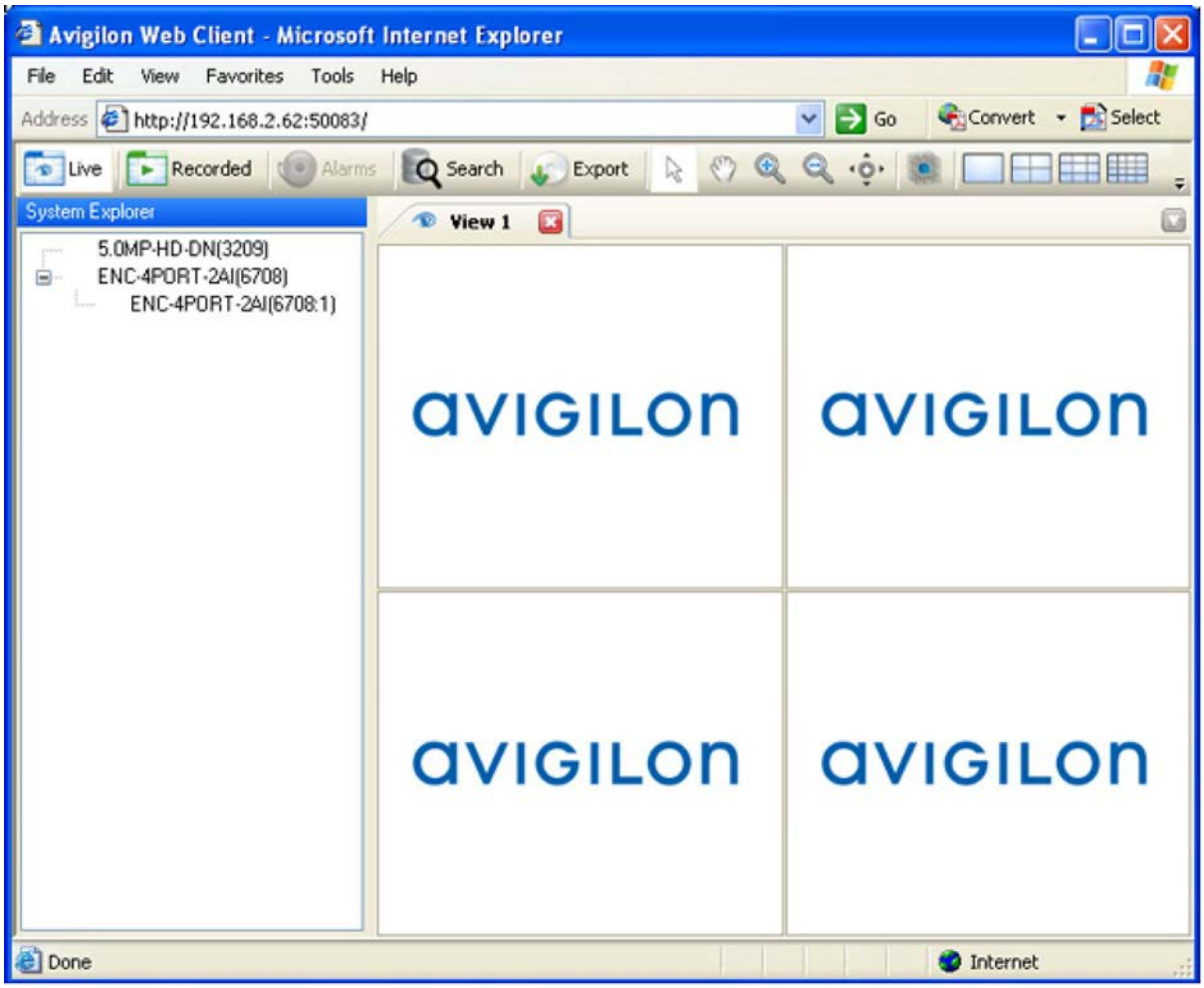

Figure A. Avigilon Control Center Web Client

Reporting Bugs

If an error occurs in the Avigilon Control Center System, you can contact Avigilon Support at support@avigilon.com or +1.888.281.5182.

To help diagnose your problem, the Avigilon Support team may ask you to provide a System Bug Report. The System Bug Report is a zip file generated by the Avigilon Control Center Client software that contains the system log and error reports for each of the servers you have access to.

1. Select **Help > System Bug Report...**.
2. When the Download System Bug Report dialog box appears, click **Download**.
3. In the Save As dialog box, name the file and click **Save**.
4. Once the System Bug Report has downloaded successfully, click **Close**.

Keyboard Commands

Use any of the keyboard commands below to help you navigate the Avigilon Control Center Client software.

The Key Combination column show the commands used on a standard keyboard, while the Keypad Combination column show the commands used on an Avigilon USB Professional Joystick Keyboard.

Image Panel & Camera Commands

Command	Key Combination	Keypad Combination (Image Panel buttons)
Select image panel Image panel # are displayed after pressing the first key.	* + <*image panel #*> + Enter

+ <*image panel #*> + ENTER |
| Select camera
Cameras are selected using their *logical ID*. | / + <*Logical ID*> + Enter |

+ <*Logical ID*> + ENTER |
Select the next panel	Tab	
Select the previous panel	Shift + Tab	
Clear panel selection	* + 0 + Enter	
Remove camera from selected panel	Backspace
Expand/Collapse selected panel	Ctrl + E
Add bookmark for selected camera **Note:** For recorded	Ctrl + B	

video only.		
Start/Stop manual recording for selected camera	Ctrl + R	
Start/Stop audio for selected camera	Ctrl + A	
Snapshot image of selected camera video	F4	
Enable digital output		
Acknowledge the alarm currently displayed in an armed image panel		

View Commands

Command	Key Combination	Keypad Combination (View buttons)
Select the next view	Ctrl + Tab	
Select the previous view	Ctrl + Shift + Tab	
Jump to view	Ctrl + 1 to 9	
Start/Stop cycle views	Ctrl + Y	
Create new view	Ctrl + T	
Close current view	Ctrl + W	

Create new window	Ctrl + N	
Switch current view to live view mode	Ctrl + L	
Switch current view to recorded view mode	Ctrl + P	
Remove all cameras from current view	Ctrl + Backspace	
Enable/Disable full screen mode for current view	F11	
Open saved View The saved View number is displayed in the System Explorer after pressing the first button.		OPEN 3 + <Saved View #> + ENTER

Playback Commands

Command	Key Combination	Keypad Combination (Timeline buttons)
Play/Pause	Spacebar	
Increase playback speed	Page Up	
Decrease playback speed	Page Down	
Step to next frame	Shift + →	

Step to previous frame	Shift + ←	
Go to next event	Alt + →	
Go to previous event	Alt + ←	
Go forward one second	Ctrl + →	
Go forward five seconds	Ctrl + Shift + →	
Go back one second	Ctrl + ←	
Go back five seconds	Ctrl + Shift + ←	
Zoom in on the Timeline	Ctrl + Alt + +	
Zoom out on the Timeline	Ctrl + Alt + -	
Scroll forward on the Timeline	Ctrl + Alt + →	
Scroll backward on the Timeline	Ctrl + Alt + ←	
Go to start of the Timeline	Ctrl + Alt + Home	
Go to end of the Timeline	Ctrl + Alt + End	

Center the Timeline on marker	Ctrl + C	

Layout Commands

Command	Key Combination	Keypad Combination (View buttons)
Change to 1 Division layout	Alt + 1	LAYOUT 4 + PREV 1
Change to 4 Division layout	Alt + 2	LAYOUT 4 + NEXT 2
Change to 9 Division layout	Alt + 3	LAYOUT 4 + OPEN 3
Change to 16 Division layout	Alt + 4	LAYOUT 4 + LAYOUT 4
Change to 25 Division layout	Alt + 5	LAYOUT 4 + 5
Change to 36 Division layout	Alt + 6	LAYOUT 4 + CLOSE 6
Change to 6 Division (1 + 5) layout	Alt + 7	LAYOUT 4 + 7
Change to 8 Division (1 + 7) layout	Alt + 8	LAYOUT 4 + 8
Change to 13 Division (1 + 12) layout	Alt + 9	LAYOUT 4 + 9
Change to 10 Division (2 + 8) layout	Alt + 0	LAYOUT 4 + 0
Change to next layout	Alt +]	

Change to previous layout	Alt + [	

PTZ Commands (Digital and Mechanical)

Command	Key Combination	Keypad Combination (PTZ buttons)
Toggle PTZ controls	Ctrl + D	
Zoom in	+	
Zoom out	-	
Pan left	←	
Pan right	→	

Tilt up	↑	
Tilt down	↓	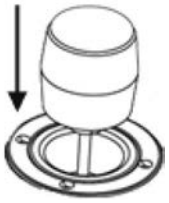
Increase PTZ speed	Shift + ↑	The further the joystick is from center, the faster the speed.
Decrease PTZ speed	Shift + ↓	The closer the joystick is to center, the slower the speed.
Open iris	Home	
Close iris	End	
Focus near	Insert	
Focus far	Delete	
PTZ menu left	←	
PTZ menu right	→	
PTZ menu up	↑	

PTZ menu down		
Activate preset		PRESET + <*Preset #*> + ENTER
Run pattern		PATTERN + <*Pattern #*> + ENTER
Start auxiliary		+ <*Aux #*> + ENTER
Stop auxiliary		+ <*Aux #*> + ENTER

Index

A

Alarms 26, 113
- acknowledge 115
- add 26
- assign 115
- delete 29
- edit 29
- export 115
- monitor 113
- purge 115
- search 127
- video 115

armed image panels 117

audio 71, 100, 103

Avigilon Control Center Client 1, 6

Avigilon Control Center Server 1, 3

Avigilon University 2

B

backup 30, 153

bookmarks 105

Brightness 56

C

camera
- bandwidth 60
- connect 9, 11, 12
- discover 9
- I/O 67, 69
- location 53
- logical ID 53
- name 53
- setup 52
- view 95, 101

Change Display Quality 109

client
- bandwidth 73
- export 77
- import 77
- language 73
- setup 72

Color Saturation 56

Compression and Image Rate 60

Configure Data Format 35

Connect/Disconnect Cameras 9
Connection Type 11
Contrast 56
Cycle Tabs 84
D
deinterlacing 111
digital inputs 67
  setup 67
digital outputs 67
  setup 69
  trigger 101
disconnect 9
Display Adjustments 110
Display Deinterlaced Images 111
dual streams 60
E
Email Notification 39
  add 40
  delete 42
  edit 42
Email Server 39
export
  audio 149
  client settings 77
  images 135, 145, 147
  License Plate Watch List 50
  video 140, 141, 142
Exposure 56
F
feedback 2
find 3, 9
Find Server 3, 5
Flicker Control 56
Focus 59
Full Screen 84
G
General 14, 53
Getting Started 3
Groups 19
  add 23
  delete 25
  edit 25
I
Image and Display 56
Image Dimensions 62
image panel 6
  arming 117
  maximize 108
  restore 108
  video display 8, 107
image quality 60
image rate 60
import
  client settings 77
  License Plate Watch List 50
  Windows Users 22

IR Cut Filter 56
Iris 56
J
Joystick 75
K
keyboard commands 157
L
language 73
License Plate Recognition 48
  overlay 119
  search 131
  setup 49
  Watch List 50, 119
License Plate Watch List 50
License Priority 11
Live Export 138
live video 8, 95
locate server 3
Log In 5
  automatic 73
Log Out 5
Login Timeout 19
M
Manage Server Connections 3
Manual Recording 67
  overlay 108
  setup 67
  start 100
  stop 100
Maps 87
  add 88
  delete 90
  edit 90
Maximum Exposure 56
Maximum Gain 56
Member Of 19
Menu bar 6
Microphone 71
Motion Detection 63
motion sensitivity 64
motion threshold 64
N
Network 55
O
Overlays 108
P
Pan 96, 102
Password 19
POS Transactions 32
  add 32
  delete 38
  edit 38
  exceptions 37
  search 129
  source data filter 35
  source data format 35

Privacy Zones 65
add 65
delete 66
edit 66
PTZ 6
controls 96
enable 53
R
recorded video 8
Recording and Bandwidth 17
recording schedule template 15
resolution 60
Rules 42
add 43
S
Save Snapshot 135
Save View 85
Schedule 15
Scheduled Backup 30
Search 121
alarms 127
events 121
license plates 131
pixels 123
POS transactions 129
thumbnails 125
server
bandwidth 17
connect camera 11
discover 3
name 14
recording schedule 15, 17
setup 13
Setup 9
alarms 26
camera 52
email 39
license plate recognition 48
local client 72
POS 32
rules 42
server 13
users 19
Sharpening 56
shut down 3
Site View 79
add 79
delete 81
edit 81
software license 1
start up 3
status LEDs 53
support 2
System Bug Report 156
System Explorer 6
System Log 47

system requirements 1

T

Timeline 6, 103

Toolbar 6

U

upgrades 2

users 19

- add 19
- delete 21
- edit 21
- Windows ID 22

Users and Groups 19

V

video 95

- analog 111
- display quality 107, 109
- export 135
- live 8, 95
- overlays 108
- recorded 8, 101
- view 8, 95, 101

View tab 6, 83

- add 83, 95, 101
- cycle tabs 84
- full screen 84
- layout 84
- Maps 87
- remove 83
- save 85
- web pages 93

W

Watch List 50

Web Client 155

Web Pages 93

- add 93
- delete 94
- edit 94

White Balance 56

Windows Users 22

Workspace 6

Z

Zoom 96, 102

This Page Left Intentionally Blank

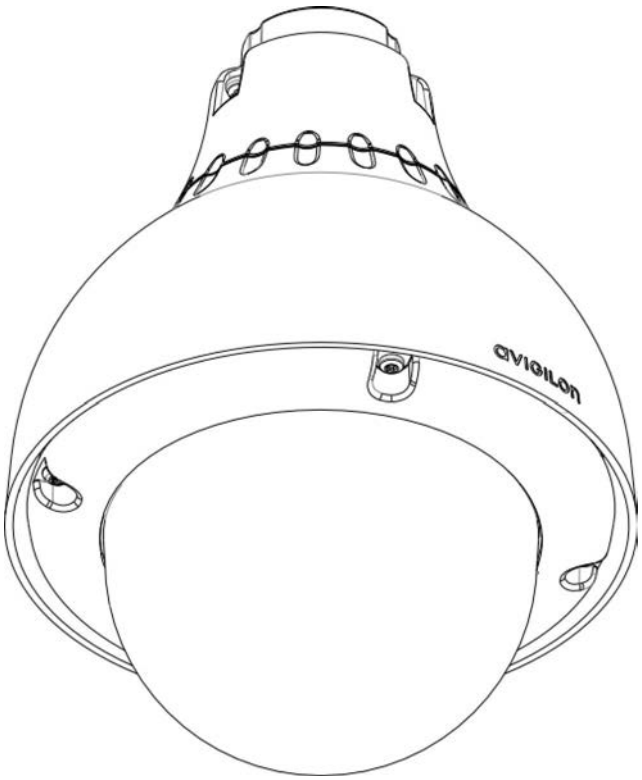

Installation Guide

Avigilon™ High Definition H.264 PTZ IP Dome Camera Models:

1.0W-H3PTZ-DP20 and 2.0W-H3PTZ-DP20

Important Safety Information

This manual provides installation and operation information and precautions for the use of this camera. Incorrect installation could cause an unexpected fault. Before installing this equipment read this manual carefully. Please provide this manual to the owner of the equipment for future use.

The Warning symbol indicates the presence of dangerous voltage within and outside the product enclosure that may constitute a risk of electric shock, serious injury or death to persons if proper precautions are not followed.

The Caution symbol alerts the user to the presence of hazards that may cause minor or moderate injury to persons, damage to property or damage to the product itself if proper precautions are not followed.

WARNING — Failure to observe the following instructions may result in severe injury or death.

- Installation must be performed by qualified personnel only, and must conform to all local codes.
- This product is intended to be supplied by a UL Listed Power Unit marked “Class 2” or “LPS” or “Limited Power Source” with output rated 24 VAC +/- 10%, 55 VA min.; 24 VDC +/- 10%, 44 W min. or Power over Ethernet (PoE) Plus IEEE802.3at Type 2 compliant Power Sourcing Equipment (PSE) rated 42.5-57 VDC, 25.5W min.
- Any external power supply connected to this product may only be connected to another Avigilon product of the same model series. External power connections must be properly insulated.
- Do not connect directly to mains power for any reason.

CAUTION — Failure to observe the following instructions may result in injury or damage to the camera.

- Do not install near any heat sources such as radiators, heat registers, stoves, or other sources of heat.
- Do not subject the cables to excessive stress, heavy loads or pinching.
- Do not open or disassemble the device. There are no user serviceable parts.
- Refer all servicing to qualified personnel. Servicing may be required when the device has been damaged (such as from a liquid spill or fallen objects), has been exposed to rain or moisture, does not operate normally, or has been dropped.
- Do not use strong or abrasive detergents when cleaning the device body.
- Use only accessories recommended by Avigilon.

Regulatory Notices

This device complies with part 15 of the FCC Rules. Operation is subject to the following two conditions: (1) This device may not cause harmful interference, and (2) this device must accept any interference received, including interference that may cause undesired operation.

This Class B digital apparatus complies with Canadian ICES-003.

FCC Notice

This equipment has been tested and found to comply with the limits for a Class B digital device, pursuant to Part 15 of the FCC rules. These limits are designed to provide reasonable protection against harmful interference in a residential installation. This equipment generates, uses and can radiate radio frequency energy and, if not installed and used in accordance with the instructions, may cause harmful interference to radio communications. However, there is no guarantee that interference will not occur in a particular installation. If this equipment does cause harmful interference to radio or television reception, which can be determined by turning the equipment off and on, the user is encouraged to try to correct the interference by one or more of the following measures:

- Reorient or relocate the receiving antenna.
- Increase the separation between the equipment and the receiver.
- Connect the equipment into an outlet on a circuit different from that to which the receiver is connected.
- Consult the dealer or an experienced radio/TV technician for help.

Changes or modifications made to this equipment not expressly approved by Avigilon Corporation or parties authorized by Avigilon Corporation could void the user's authority to operate this equipment.

Disposal and Recycling Information

When this product has reached the end of its useful life, please dispose of it according to your local environmental laws and guidelines.

Risk of fire, explosion, and burns. Do not disassemble, crush, heat above 100 °C (212 °F), or incinerate.

European Union:

This symbol means that according to local laws and regulations your product should be disposed of separately from household waste. When this product reaches its end of life, take it to a collection point designated by local authorities. Some collection points accept products for free. The separate collection and recycling of your product at the time of disposal will help conserve natural resources and ensure that it is recycled in a manner that protects human health and the environment.

Legal Notices

© 2013 -2015 Avigilon Corporation. All rights reserved. Unless expressly granted in writing, no license is granted with respect to any copyright, industrial design, trademark, patent or other intellectual property rights of Avigilon Corporation or its licensors.

AVIGILON is a registered and/or unregistered trademark of Avigilon Corporation in Canada and other jurisdictions worldwide. Other product names mentioned herein may be the unregistered and/ or registered trademarks of their respective owners. ™ and ® are not used in association with each trademark in this document.

Disclaimer

This manual has been compiled and published covering the latest product descriptions and specifications. The contents of this manual and the specifications of this product are subject to change without notice. Avigilon reserves the right to make changes without notice in the specifications and materials contained herein and shall not be responsible for any damages (including consequential) caused by reliance on the materials presented, including but not limited to typographical and other errors relating to the publication.

Avigilon Corporation
http://www.avigilon.com

920-0074A

Revision: 5 - EN

2015-01-20

Table of Contents

Overview 1
Front View 1
Top View 2
Pendant Mount Adapter 3
Installation 4
Camera Package Contents 4
Precautions for Installing Near Salt Water 4
Installation Steps 4
Installing the Mount Adapter 5
Connecting Cables 7
Securing the PTZ Dome Camera 8
Assigning an IP Address 8
Accessing the Live Video Stream 8
For More Information 9
Cable Connections 10
Connecting External Power 10
Connecting to External Devices 10
LED Indicators 13
Resetting to Factory Default Settings 14
Setting the IP Address Using the ARP/Ping Method 15
Cleaning 16
Dome Bubble 16
Body 16
Specifications 17
Limited Warranty & Technical Support 19

Overview

Front View

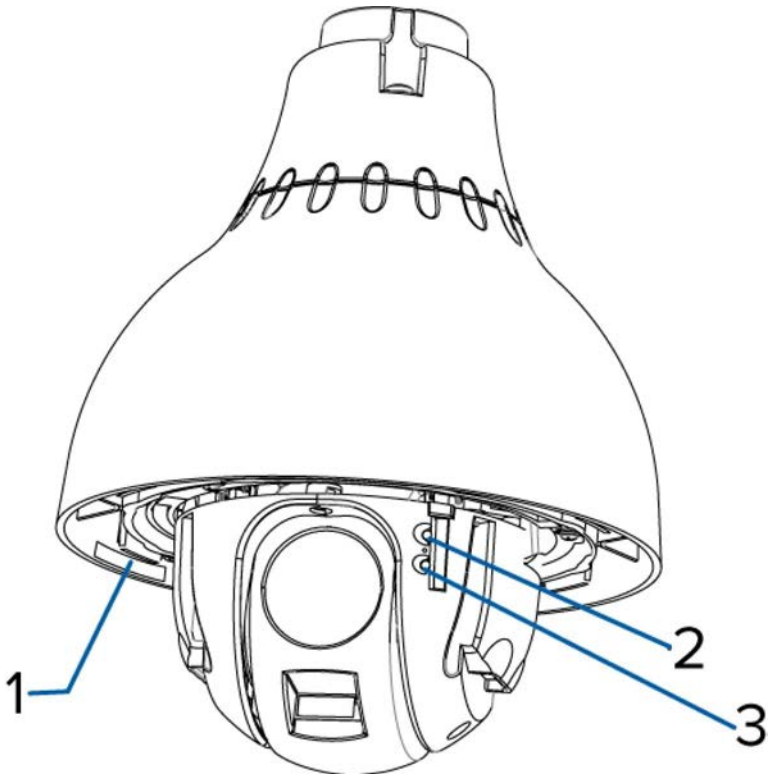

1. **Serial Number Tag**

   Product serial number and part number label.

2. **Link LED**

   Indicates if there is an active connection in the Ethernet port.

3. **Connection Status LED**

   Provides information about device operation. For more information, see *LED Indicators* on page 13

Top View

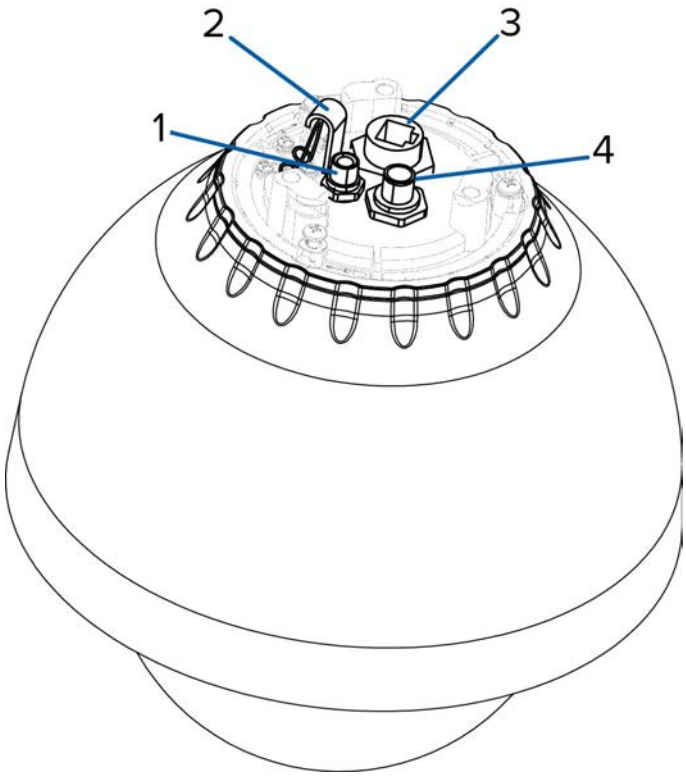

1. **External Power**

   Accepts an external power connection when Power over Ethernet is not available.

2. **Lanyard Anchor**

   The safety lanyard attaches to the anchor to prevent the camera from falling during installation.

3. **Ethernet Port**

   Accepts an Ethernet connection to a network. Server communication and image data transmission occurs over this connection. Also receives power when it is connected to a network that provides Power over Ethernet.

4. **External I/O**

   Provides connections to external input/output and audio/video devices.

Pendant Mount Adapter

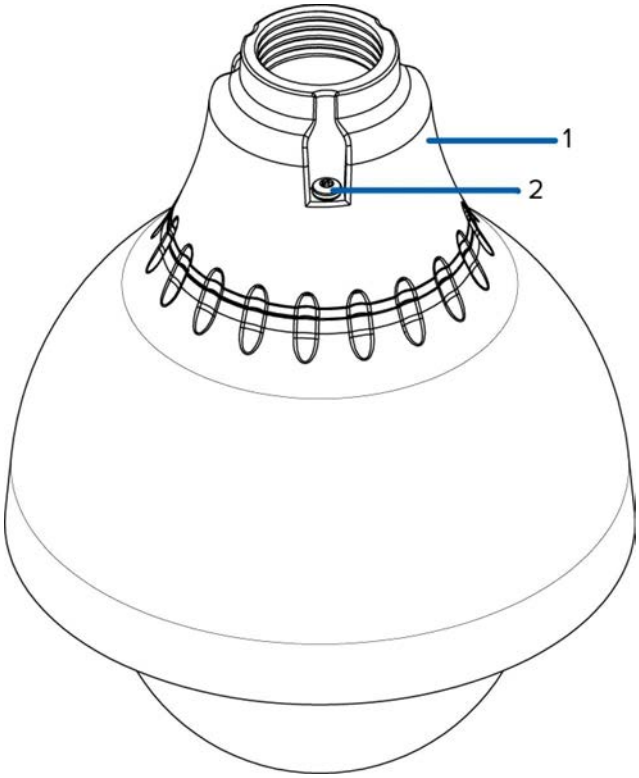

1. **1-1/2” NPT Mount Adapter**

   Standard 1-1/2” NPT adapter for mounting the dome camera to a pendant mount bracket.

2. **Tamper Resistant Screws**

   Torx captive screws to fix the dome camera to the NPT adapter.

Installation

Camera Package Contents

Ensure the package contains the following:

- Avigilon™ High Definition PTZ Dome Camera
- 1 ½" NPT Adapter
- T20 Torx key
- Teflon Sealing Tape
- RJ-45 crimp-on plug and weather-resistant housing
- External Power wiring harness, Avigilon Part #110-0017B
- External I/O wiring harness, Avigilon Part #110-0018B

Precautions for Installing Near Salt Water

Salt environments are hard on camera paint and external appearances but the camera functionality will not be affected if the cameras are installed as described in this guide.

Follow these precautions to avoid camera issues when installing in a salt heavy environment:

- Use mounting accessories offered by Avigilon. All Avigilon accessories are tested to work with Avigilon cameras in the rated environments.
- If you use a third-party accessory, you *must* ensure that the material is compatible with the finish of the camera housing or galvanic corrosion may occur.
- Never pair steel mounting accessories with aluminum camera enclosures. Steel corrodes aluminum when salt is introduced. The corrosion is an electrochemical reaction and will cause the corrosion to spread across the entire camera body.
- Always insulate any camera surface that is in contact with another metal or conductive material. It is recommended that you always isolate the mounting screws from the mounting surface and camera housing with rubber or plastic shoulder washers.

Installation Steps

Complete the following steps to install the device:

Installing the Mount Adapter 5

Connecting Cables 7

Securing the PTZ Dome Camera 8

Assigning an IP Address 8

Installing the Mount Adapter

CAUTION — The dome camera must be mounted as instructed below or problems with moisture may arise and will not be covered by the dome camera warranty.

The dome camera must be mounted on a 1-1/2” NPT male threaded wall or ceiling mounting bracket. The mounting bracket is not included in the camera package.

1. Wrap the thread of the mounting bracket with the supplied Teflon sealing tape to create a water tight seal around the camera connection. There should be a minimum of three turns around the entire threaded surface.

   When applying the Teflon sealing tape, be sure to wrap in the same direction that the mount will be tightened. This will ensure the tape does not unravel when installing the mating parts together.

   Tip: Always apply Teflon tape to threaded mounts to help prevent the threads from binding.

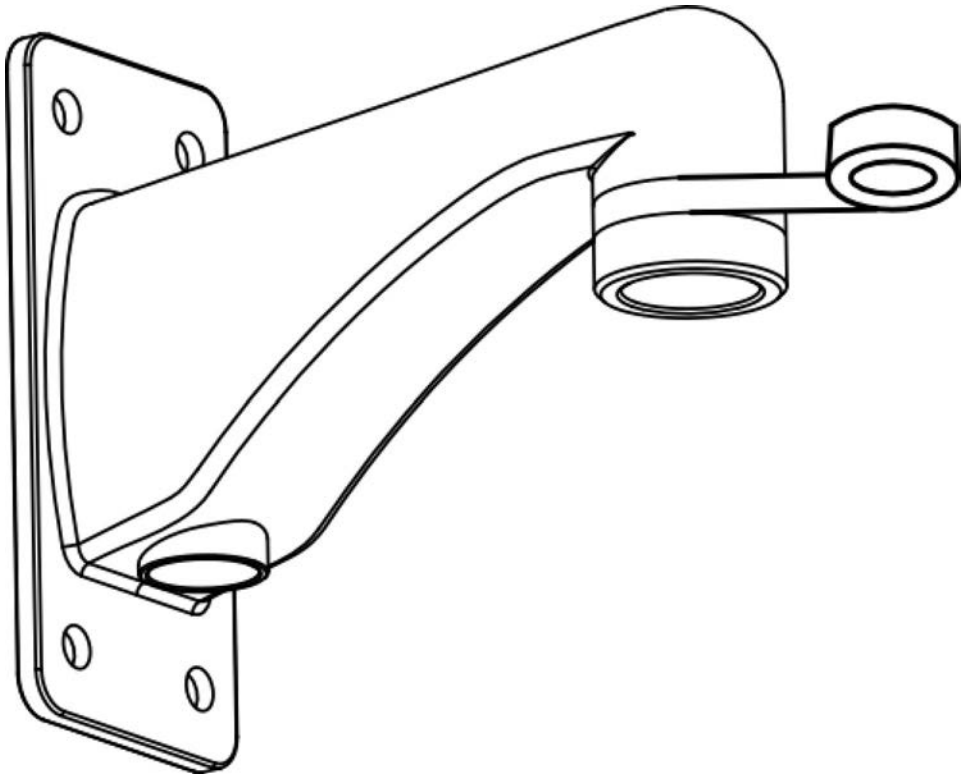

2. Pull the required cables through the mounting bracket then install the supplied connectors and wire assemblies.

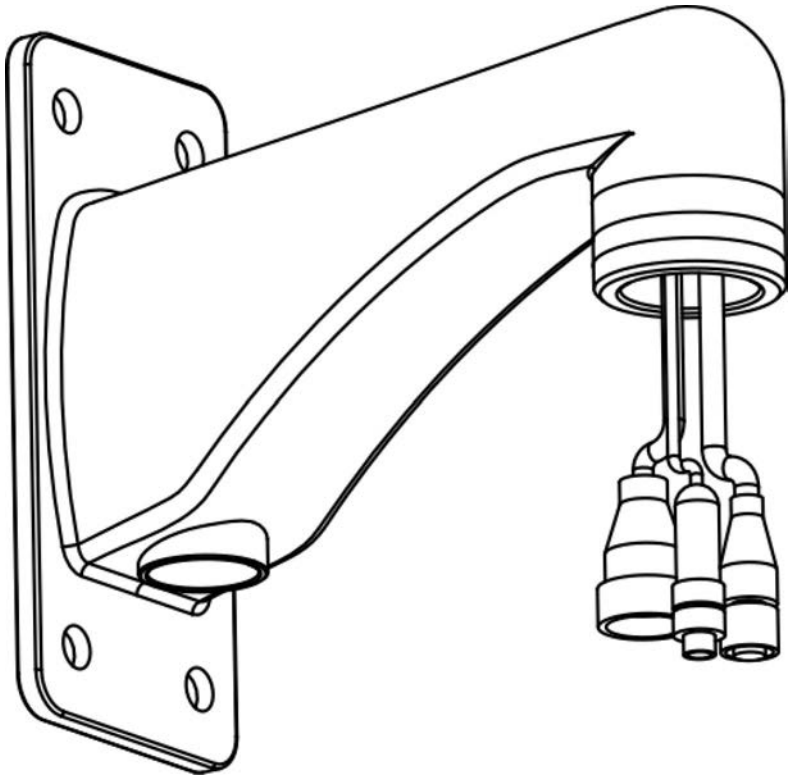

3. Install the 1 1/2” NPT mount adapter.

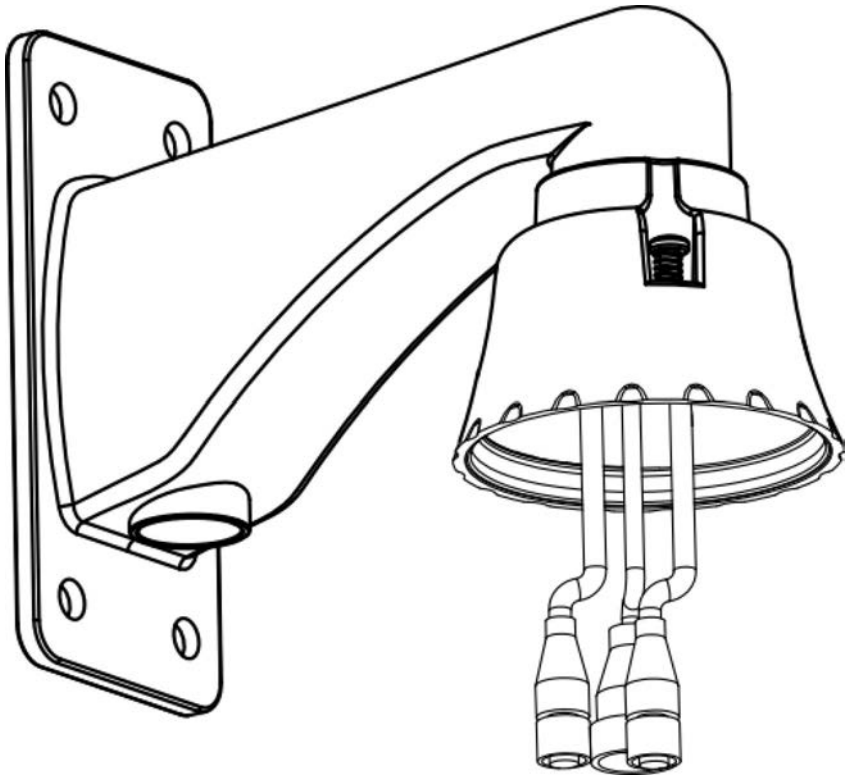

4. Connect the safety lanyard from inside the NPT mount adapter to the anchor on the PTZ dome camera.

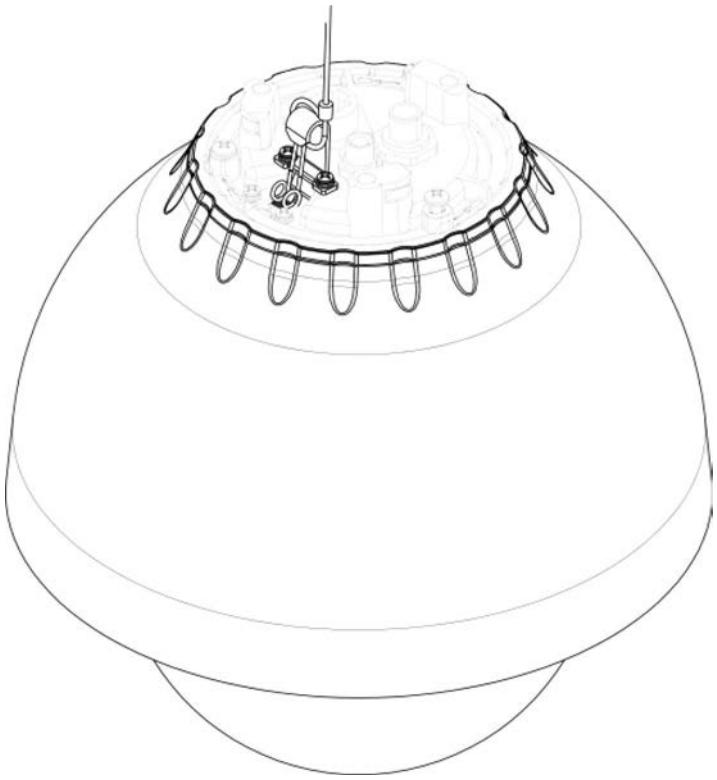

Connecting Cables

Refer to the diagrams in the Overview section for the location of the different connectors.

To connect the cables required for proper operation, complete the following:

1. Make sure the safety lanyard is connected to the PTZ dome camera.
2. If there are external input or output devices that need to be connected to the camera (for example: door contacts, relays, analog video, speakers, etc), connect the devices to the camera I/O connector cable.
3. Connect power using one of the following methods:
   - Power over Ethernet (PoE) Plus IEEE 802.3at Class 4 — Connect a PoE Plus compliant injector or switch to the Ethernet network cable.
   - External Power — Connect an external “Class 2” or “LPS” or “Limited Power Source” with output rated 24 VAC +/- 10%, 55 VA minimum or 24 VDC +/- 10%, 44 W minimum.

     For more information, see *Connecting External Power* on page 10.
4. Connect a network cable to the Ethernet Port (RJ-45 connector).

   The Link LED will turn on once a network link has been established.
5. Check that the Connection Status LED indicates the correct state. For more information, see *LED Indicators* on page 13.

.

Securing the PTZ Dome Camera

After the cable connections have been made, secure the PTZ dome camera to the mount.

1. Push the PTZ dome camera into the 1 1/2" NPT mount adapter then twist until it locks into place.

   NOTE: Be careful not to trap any cables between the dome camera housing and the mount adapter.

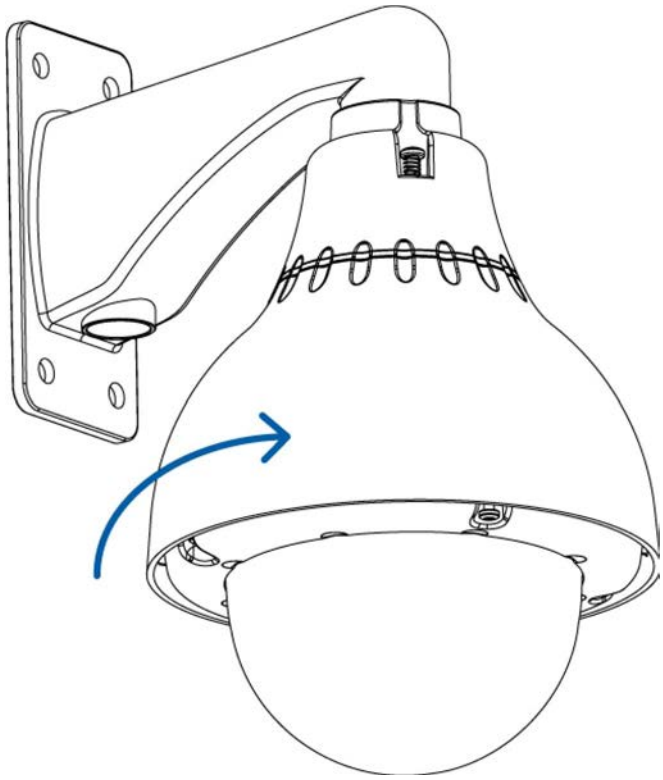

2. Use the Torx key included with the dome camera to tighten the three screws in the mount adapter.

Assigning an IP Address

The camera automatically obtains an IP address when it is connected to a network.

NOTE: If the camera cannot obtain an IP address from a DHCP server, it will use Zero Configuration Networking (Zeroconf) to choose an IP address. When set using Zeroconf, the IP address is in the 169.254.0.0/16 subnet.

The IP address settings can be changed using one of the following methods:

- Camera's web browser interface: http://*<camera IP address>*/
- ARP/Ping method. For more information, see *Setting the IP Address Using the ARP/Ping Method* on page 15
- Network Video Management software application (for example, Avigilon™ Control Center).

NOTE: The default camera username is `admin` and the default password is `admin`.

Accessing the Live Video Stream

Live video stream can be viewed using one of the following methods:

- Web browser interface: http://<*IP address*>/
- Network Video Management software application (for example, the Avigilon Control Center software).

NOTE: The default camera username is `admin` and the default camera password is `admin`.

For More Information

Additional information about setting up and using the device is available in the following guides:

- *Avigilon™ Control Center Client User Guide*
- *Avigilon™ High Definition H.264 Web Interface User Guide*

The manuals are available on the Avigilon website: **http://avigilon.com/support-and-downloads**

Cable Connections

Connecting External Power

NOTE: Do not perform this procedure if Power over Ethernet (POE) is used.

If PoE is not available, the dome camera can be powered with 24 VAC or 24 VDC through the removable power connector:

1. Remove as much insulation as required to splice the supplied power connector to the power adapter wires (not included).

   Do not nick or damage the wires.

2. Remove the dummy plug from the power receptacle on the camera. See *Top View* on page 2 for the location of the external power receptacle.
3. Attach the power connector to the receptacle on the camera.

The power connector pin details are:

1. Brown — Power, accepts either polarity
2. Not used
3. Blue — Power, accepts either polarity

WARNING — This product is intended to be supplied by a UL Listed Power Unit marked “Class 2” or “LPS” or “Limited Power Source” with output rated 24 VAC +/- 10%, 55 VA min. or 24 VDC +/- 10%, 44 W min.

Connecting to External Devices

External devices, including audio and video devices, are connected to the camera through the I/O cable. The pinout for the I/O connector is shown here:

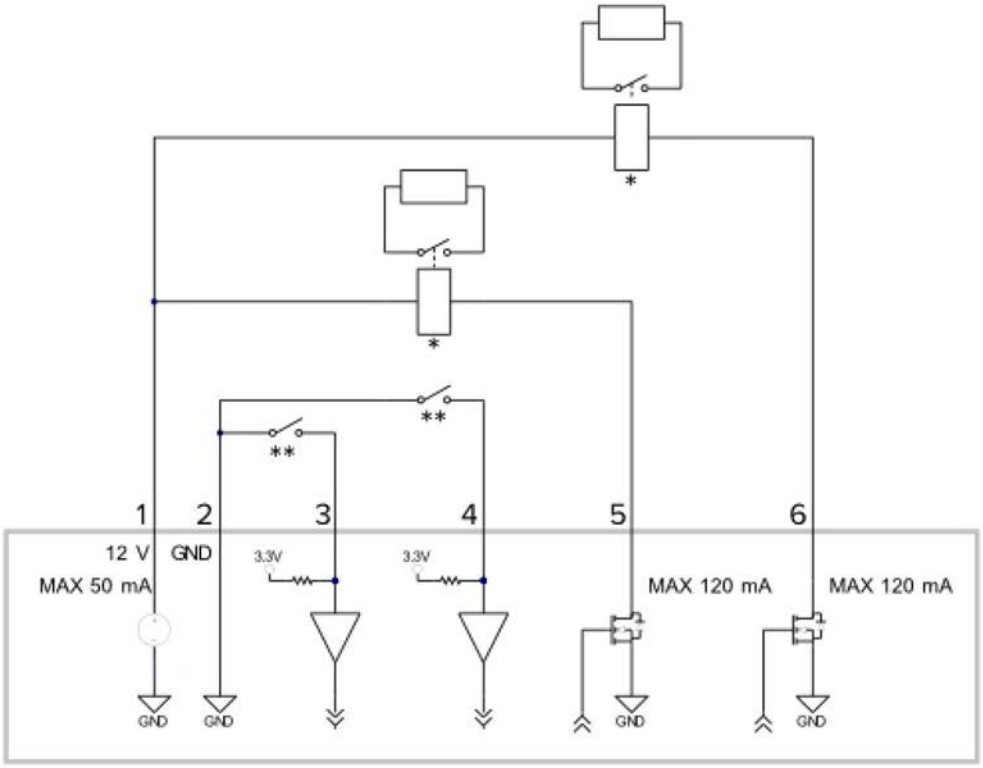

1. Dark Red — +12 VDC, 50 mA max. output for relay drive
2. Grey — Relay ground return
3. Red — Relay input 1
4. Orange — Relay input 2
5. Pink — Relay output 1
6. Blue — Relay output 2
7. * — Relay
8. ** — Switch

NOTE: The 12 V connection can be used to energize a relay coil with up to 50 mA. If more than 50 mA is required, an external power supply up to 25 VDC at 120 mA can be used.

- White — Audio/video analog ground return
- Brown — Analog audio input
- Green — Analog audio output
- Yellow — Analog video output
- Black — not connected
- Purple — not connected

The camera can be connected to an external microphone, speaker and video monitor through the I/O connector.

NOTE: The camera only supports line level mono audio input and an NTSC or PAL video output.

The video output signal is determined by the camera flicker control setting. When the camera flicker control is set to 60 Hz, the video output signal is NTSC. When the flicker control is set to 50 Hz, the video output signal is PAL. Use the Camera Installation Tool to configure the camera's flicker control in the Image and Display setup.

LED Indicators

Once connected to the network, the Connection Status LED will display the progress in connecting to the Network Video Management software.

The following table describes what the LEDs indicate:

Connection State	Connection Status LED	Description
Obtaining IP Address	One short flash every second	Attempting to obtain an IP address.
Discoverable	Two short flashes every second	Obtained an IP address but is not connected to the Network Video Management software.
Upgrading Firmware	Two short flashes and one long flash every second	Updating the firmware.
Connected	On	Connected to the Network Video Management software.

Resetting to Factory Default Settings

If the camera no longer functions as expected, you can choose to reset the camera to its factory default settings.

Use the firmware revert button to reset the camera.

NOTE: Be careful not to scratch the dome bubble.

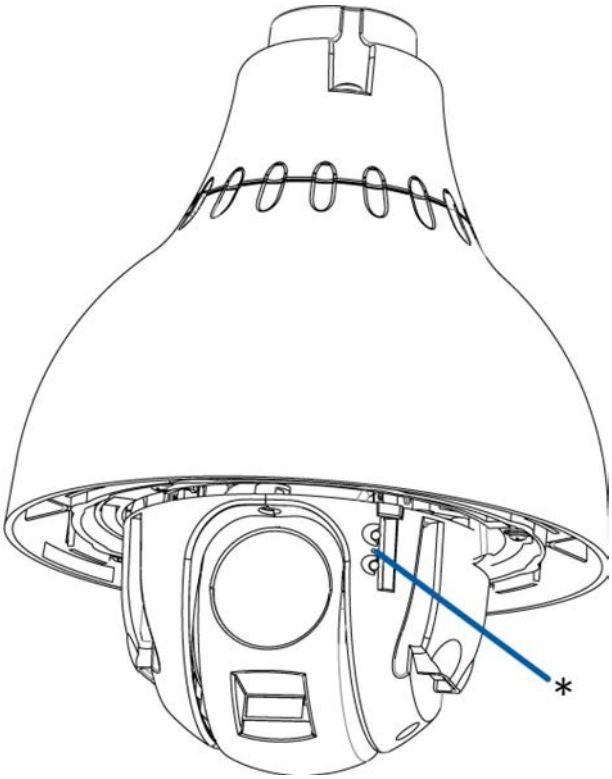

Figure 1: The firmware revert button between the status LEDs.

1. Ensure the camera is powered on.
2. Remove the dome cover by loosening the screws that fix the cover to the base. The Torx key included with the dome camera can be used to loosen the screws
3. Using a straightened paperclip or similar tool, gently press and hold the firmware revert button for two seconds.
4. Re-install the dome cover.

CAUTION — Do not apply excessive force. Inserting the tool too far will damage the device.

Setting the IP Address Using the ARP/Ping Method

Complete the following steps to configure the camera to use a specific IP address:

1. Locate and copy down the MAC Address (MAC) listed on the Serial Number Tag for reference.
2. Open a Command Prompt window and enter the following commands:
   a. `arp -s` *<New Camera IP Address> <Camera MAC Address>*

      For example: `arp -s 192.168.1.10 00-18-85-12-45-78`

   b. `ping -l 123 -t` *<New Camera IP Address>*

      For example: `ping -l 123 -t 192.168.1.10`
3. Reboot the camera.
4. Close the Command prompt window when you see the following message:

   `Reply from <New Camera IP Address>: ...`

Cleaning

Dome Bubble

If the video image becomes blurry or smudged in areas, it may be because the dome bubble requires cleaning.

To clean the dome bubble:

- Use hand soap or a non-abrasive detergent to wash off dirt or finger prints
- Use a microfiber cloth or non-abrasive fabric to dry the dome bubble.

Important: Failure to use the recommended cleaning materials may result in a damaged or scratched dome bubble that will negatively impact image quality and result in unwanted IR light reflecting into the lens.

Body

- Use a dry or lightly dampened cloth to clean the camera body.

  Do not use strong or abrasive detergents.

Specifications

Camera	
Lens	4.7-94mm, 20x zoom, F1.6 and automatic focus
Audio Input/Output	Line level input and output
Video Output	NTSC/PAL
Network	
Network	100Base-TX
Cabling Type	CAT5
Connector	RJ-45
API	ONVIF compliance version 1.02, 2.00, Profile S (www.onvif.org)
Security	Password protection, HTTPS encryption, digest authentication, WS authentication, user access log, 802.1x port based authentication.
Streaming Protocols	IPv4, HTTP, HTTPS, SOAP, DNS, NTP, RTSP, RTCP, RTP, TCP, UDP, IGMP, ICMP, DHCP, Zeroconf, ARP, LLDP, RTP/UDP, RTP/UDP multicast, RTP/RTSP/TCP, RTP/RTSP/HTTP/TCP,RTP/ RTSP/HTTPS/TCP, HTTP
Mechanical	
Dimensions Ø x H	226 mm x 299.77 mm (8.9” x 11.8”)
Weight	3.9 kg (8.6 lbs)
Dome Bubble	Acrylic, clear
Body	Aluminum
Housing	Pendant mount
Finish	Powder coat, cool gray 2
Tilt	186°, E-flip, 0.05 - 360°/sec
Pan	360°, endless, 0.05 - 450°/sec
Electrical	
Power Consumption	55 VA with AC power 44 W with DC power 25.5 W with IEEE 802.3at Class 4 PoE Plus
Power Source	VDC: 24 V +/- 10% VAC: 24 V +/- 10% PoE: IEEE 802.3at Class 4 PoE Plus compliant
Power Connector	Waterproof 2-pin connector
Environmental	
Operating	-30 °C to + 50 °C (-22 °F to 122 °F) with IEEE 802.3at Class 4 PoE Plus power

Temperature	-45 °C to + 50 °C (-50 °F to 122 °F) with external power
Storage Temperature	-10 °C to +70 °C (14 °F to 158 °F)
Humidity	0-95% non-condensing
Certifications	
Safety	UL 60950 CSA 60950 CB Scheme CVV RCM
Environmental	IK10 Impact Rating (with H3PTZ-DP-CLEAR-IK only) Meets IP66 Weather Rating
Electromagnetic Emissions	FCC Part 15 Subpart B Class B EN 55022 Class B IC ICES-003 Class B
Electromagnetic Immunity	EN 55024 Class B EN 61000-4-2 EN 61000-4-3 EN 61000-4-4 EN 61000-4-5 EN 61000-4-6 EN 61000-4-11

Limited Warranty & Technical Support

Avigilon warrants to the original consumer purchaser, that this product will be free of defects in material and workmanship for a period of 3 years from date of purchase. The warranty period shall be limited to a period of 1 year from date of purchase for all moving parts (including but not limited to fans, pan/tilt motors, lens motors, irises and lens assemblies).

The manufacturer's liability hereunder is limited to replacement of the product, repair of the product or replacement of the product with repaired product at the discretion of the manufacturer. This warranty is void if the product has been damaged by accident, unreasonable use, neglect, tampering or other causes not arising from defects in material or workmanship. This warranty extends to the original consumer purchaser of the product only.

AVIGILON DISCLAIMS ALL OTHER WARRANTIES EXPRESSED OR IMPLIED INCLUDING, WITHOUT LIMITATION, ANY IMPLIED WARRANTIES OF MERCHANTABILITY OR FITNESS FOR A PARTICULAR PURPOSE, EXCEPT TO THE EXTENT THAT ANY WARRANTIES IMPLIED BY LAW CANNOT BE VALIDLY WAIVED.

No oral or written information, advice or representation provided by Avigilon, its distributors, dealers, agents or employees shall create another warranty or modify this warranty. This warranty states Avigilon's entire liability and your exclusive remedy against Avigilon for any failure of this product to operate properly.

In no event shall Avigilon be liable for any indirect, incidental, special, consequential, exemplary, or punitive damages whatsoever (including but not limited to, damages for loss of profits or confidential or other information, for business interruption, for personal injury, for loss of privacy, for failure to meet any duty including of good faith or of reasonable care, for negligence, and for any other pecuniary or other loss whatsoever) arising from the use of or inability to use the product, even if advised of the possibility of such damages. Since some jurisdictions do not allow the above limitation of liability, such limitation may not apply to you.

This Limited Warranty gives you specific legal rights and you may also have other rights which vary from jurisdiction to jurisdiction.

Warranty service and technical support can be obtained by contacting Avigilon Technical Support by phone at 1.888.281.5182 or via email at support@avigilon.com.

800 E. 64th Avenue #17
Denver, CO 80229

Phone: 303-298-7900
Fax: 303-650-5667

EJMT – Fire Alarm/FACCTV Systems Operations Plan

NORMAL OPERATIONS

During normal operations (non-abnormal or non-fire events), the FOLHD, FA, and FA CCTV Systems remain in normal conditions.

The System Operator can navigate thru the FA Fireworks Display System software screens as desired to familiarize themselves with navigating the software screens, reviewing extended messages, reviewing device and panel placements, and other information so that they feel comfortable with how the system is laid out during non-emergency situations. We would recommend that each System Operator perform this review on a quarterly basis, as a minimum, to keep fresh, as to how the System operates. Please note that the deluge control screens will initiate (turn on and turn off) the various system controlled deluge systems so it is suggested that care be exercised when reviewing these screens. The System does ask if the System Operator wants to initiate the selected command function, so there is some redundancy built into the system software to prevent accidental initiation of commands.

The System Operator can navigate thru the FA CCTV System software screens to again familiarize themselves with navigating the software screens and exercising the pan tilt zoom functions of the FA CCTV cameras. Like above, it is recommended that each System Operator perform this review on a quarterly basis; as a minimum, to keep fresh as to how the System operates.

The FOLHD System runs in the background in both normal and emergency situations, so the System operator will not have any interaction with this system unless specifically directed to access it to assist Systems Group in identifying system issues prior to responding to the site for service or maintenance purposes.

EMERGENCY OPERATIONS

Upon activation of a an emergency event (FOLHD CCTV alarm or deluge release alarm signal, alarm pressure switch activation, fire pump run signal, emergency generator run signal, empty supply water tank level signal, or other “alarm” type event), the Systems will perform their automatic pre-programmed functions without any System Operator interface. Once the System has performed its automatic pre-programmed functions, the System Operator can subsequently take Manual Control of the System as required.

In the event that the FOLHD CCTV alarm signal is received:

> The associated camera or cameras are automatically pre-positioned to the affected tunnel deluge zone and a “FA CCTV ALARM” signal is received on the FACP Panel Operators Display Panels and the FA Fireworks workstations. At this point, no water has been released to the roadway. The System Operator can manually operate the FA CCTV cameras including Pan, Tilt, and/or Zoom functions to assess the status of the affected tunnel zone(s) or adjacent tunnel zones.

Once the System Operator has assessed the situation, the System can be reset if warranted, or the System Operator can take Manual Control of the deluge systems if warranted. We'll discuss deluge Manual Control later.

Assuming the condition restores, the FA CCTV System would revert back to Normal Operations described above.

In the event that the FOLHD deluge alarm signal is received, multiple things occur:

The FA CCTV System re-positions the FA CCTV camera or cameras to the affected zone as described above. Like above, the System operator can manually operate the FA CCTV cameras as described above. Please note that the FA CCTV cameras re-position the FA CCTV cameras to subsequent alarms in a given tunnel bore.

The FA System will automatically start the Fire Pump, shutoff the boiler circulation pumps, position the drainage system valves, and automatically release water to the roadway in the affected deluge zone until such time as the System Operator shuts off the affected deluge system and resets the FA System.

In the event that a second deluge alarm signal is received while the first deluge alarm sequence is in effect, water will be released to the roadway in the second zone as well. Please note that the System is designed to only operate two deluge zones in the automatic mode, so that could be two zones in the same tunnel bore or one in each tunnel bore. No more than two total zones are allowed to occur at the same time due to the system design and site water storage limitations.

During the deluge alarm event, the System operator can take Manual Control of the System and shut off water to the affected zone, release water to an adjacent zone, or add a second deluge zone somewhere else in the tunnel; dependent on the emergency incident. It is important to note that the System operator must start water in a second deluge zone prior to shutting off water to the automatic deluge zone to prevent "water Hammer" issues affecting the sprinkler piping. It is also important to note that the System operator can only have water flowing to two deluge zones due to the system design capacity and site water limitations. To initiate Manual Control of the System, the System Operator pulls up the Fireworks Deluge Control Screen(s) to manually turn ON a deluge zone, manually turn OFF a deluge zone, or monitor the real time status (ON or OFF) of the deluge zones.

Once the emergency situation is cleared, the System can be reset and returned to normal operations.

In the event that a waterflow "Alarm" indication from one of the deluge system alarm pressure switches is received:

This would indicate that water could be flowing inside the plenum (if a break in the piping were to occur) or water could be flowing to the roadway if a deluge valve were to fail due to an inadvertent manual activation or equipment failure.

This condition could also be a faulty switch or inadvertent alarm. In any case, maintenance personnel should be dispatched to the affected plenum deluge valve cabinet, while the System Operator verifies if water is being introduced to the roadway via the FA CCTV System.

Once the cause of the waterflow "alarm" switch has been identified and rectified, the System can be reset and returned to normal operations.

In the event that the Fire Pump "Run" signal is received:

This would indicate that water could be flowing somewhere within the fixed fire suppression system (plenums, roadway, or other adjacent areas).

If this signal is received, maintenance personnel should be dispatched to all areas of the fixed fire suppression system piping network, while the System Operator reviews all areas of the roadways to verify water is not being introduced to the roadway via the FA CCTV System.

Once the cause of the Fire Pump "Run" signal has been identified and rectified, the System can be reset and returned to normal operations.

In the event that the Emergency Generator "Run" signal is received:

This would indicate that loss of normal 120vAC power to the Site and subsequently to the Fire Alarm/FA CCTV Systems has occurred. The FA and FA CCTV Systems are fully backed up by the Emergency Generator power. In addition, the FA System field panels have battery standby systems sized for an additional 4 hours of standby time to support the automatic functions of the Fire Alarm and FA CCTV Systems. The FA and FACCTV workstations and equipment racks have small standby UPS Systems to keep the 120vAC powered system components up and running during the start-up operation of the Emergency Generator.

If this signal is received, maintenance personnel should be dispatched to the generator to verify if/why site power has been lost and remedy the cause so that site power can be restored as soon as practical.

Once the cause of the Emergency Generator "Run" signal has been identified and rectified, the System can be reset and returned to normal operations.

In the event that the "Empty" water tank signal is received:

This would indicate that the site water storage tank has been depleted and the fixed fire suppression system will not function. The "Empty" tank level causes the Fire Pump to be locked in the OFF position, which will compromise the ability of the system to deliver water to the roadway.

This is a significant event that warrants immediate maintenance response. Additional water should be transported to the Site to allow for temporary operation of the fixed fire suppression system until such time as the water storage tank has been replenished. Please note that the water storage tank has a level sensor to indicate 60 minutes lf water left and 30 minutes of water left prior to the "empty" water tank level, to alert the System Operator of impending issues with the fixed fire suppression. These monitor points will be addressed later in this plan.

Once the cause of the Empty tank level signal has been identified and rectified, the System can be reset and returned to normal operations.

Restoring the Fire Pump Operation after Additional Water is provided:

If the empty water tank level signal has been received during a deluge release event and an additional water source (pumper truck or other) has been connected to supplement the fixed fire suppression system, the System Operator simply has to activate the Fire Pump On switch on the FACP Panels in either the East or West Control Rooms or the FMO Office to release the Fire Pump Lock-out signal and restart the Fire Pump; which will also restart water delivery to the roadway.

In the event that the Mezzanine West Control Room smoke detector alarm is received:

This would indicate that smoke has been detected in the normally un-occupied secondary control room. This event could be caused by an actual smoke obscuration event (actual fire) or could be the result of an unwarranted obscuration event (dust contamination). In either case, maintenance personnel should be dispatched to the West Control Room to verify that an actual fire is not present in the West Control Room.

Once the cause of the smoke alarm signal has been identified and rectified, the System can be reset and returned to normal operations.

800 E. 64th Avenue #17
Denver, CO 80229

Phone: 303-298-7900
Fax: 303-650-5667

In the event that the Fire Pump Room heat detector alarm is received:

This would indicate that a build up of heat in the Fire Pump Room has reached (135 F), and caused the system alarm. This event could be caused by an actual fire condition, or by a piece of equipment in the Fire Pump Room overheating, which could lead to a potential fire condition. In either case, maintenance personnel should be dispatched to the Fire Pump to verify that an actual fire is not present in the Fire Pump Room.

Once the cause of the heat alarm signal has been identified and rectified, the System can be reset and returned to normal operations.

NON-EMERGENCY OPERATIONS

The FA and FA CCTV Systems monitor numerous (off-normal and non-emergency) conditions associated with the fixed fire suppression systems. Certain signals have more impact to the fixed fire suppression system than do other signals. We'll list a variety of conditions that can affect the fixed fire suppression system's ability to operate properly, in their order of importance.

SYSTEM ABNORMAL CONDITIONS

In the event that a FOLHD fiber break signal is received:

The linear heat detection system (FOLHD) has been designed in a redundant fiber configuration such that each tunnel bore is fed by a fiber that originates from each control room (East and West); thusly providing a redundant heat detection system for each tunnel bore. While a single fiber break signal would be considered a serious situation, the tunnel coverage would not be affected by a single fiber break signal. Since there are redundant fibers monitoring each tunnel, the FA CCTV and deluge systems would remain intact and functional until the situation can be resolved. Systems Group should be notified immediately of the situation so that we can respond to the Site accordingly.

In the event that a second FOLHD fiber break signal is received for the same tunnel bore, this would indicate that the affected tunnel bore no longer has full heat detection coverage that would automatically release the deluge systems. Please note that manual control of the deluge systems would remain intact. Systems Group should be notified immediately of the situation so that a service technician can be immediately dispatched to the site for repair.

It would be a rare condition that could cause a single FOLHD fiber break and extremely rare that a second fiber break condition in the same tunnel bore were to occur.

800 E. 64th Avenue #17
Denver, CO 80229

Phone: 303-298-7900
Fax: 303-650-5667

In the event that a Network Class A or Class B Circuit Failure signal is received:

The FA System has been designed in a redundant fiber configuration such that there is a primary (Class A) fiber and a secondary (Class B) fiber that connects the Fire Alarm Control Panels together. While a single Class A or Class B circuit failure would be considered a serious situation, the FA System would continue to operate normally with a single circuit failure present, until the situation can be resolved. Systems Group should be notified immediately of the situation so that we can respond to the Site accordingly.

In the event that the second Class A or Class B Circuit Failure signal is received, this would warrant a heightened response; however, unless a specific Fire Alarm Panel is completely disconnected from the FA network (extremely unlikely); the FA System would still continue to operate normally with even both the Class A and Class B circuit failure conditions present, so long as both conditions are not associated with the same Fire Alarm Panel. Again, Systems Group should be notified immediately of the situation so that we can respond to the Site accordingly.

In the extremely unlikely event that both the Class A and Class B circuit failures are received for the same Fire Alarm Panel, this would be warrant an immediate response to the Site from a Systems Group technician. Please note that the remainder of the Fire Alarm System would still operate normally, so only the portion of the System where the affected Fire Alarm Panel has reported both circuit failure conditions would be compromised.

In the event that an FPC (Fire Protection Cabinet) CCTV SW Tbl signal is received:

The FA CCTV System has been designed with a self-healing network topography such that a single FA CCTV network fiber break or FA CCTV switch failure will not cause the FA CCTV System to be compromised beyond the affected CCTV failure. In the case that the CCTV SW Tbl signal is received for a given FPC panel, only the affected camera(s) at the FPC Panel would be affected, depending on the nature of the cause of the Tbl condition. The remainder of the FA CCTV network should remain operational. Systems Group should be notified immediately of the situation so that we can respond to the Site accordingly.

In the event that an equipment rack (ECR or WCR) CCTV SW Tbl signal is received:

As above, the FA CCTV System has been designed to remain fully operational in the event of a CCTV SW Tbl. If one of the CCTV Switches in the East or West Equipment Racks were to report the CCTV SW Tbl signal, this could indicate a more serious situation in the FA CCTV and FA System, dependent on what the cause of this signal is. Systems Group should be notified immediately of the situation so that a service technician can be immediately be dispatched to the site for repair. Please note that portions of the FA and FA CCTV System would remain operational, again dependent on the specific cause of this signal.

In the event that a FPC (Fire Protection Cabinet) BPS Tbl signal is received:

This would indicate an abnormal condition has occurred at the FPC cabinet. This trouble could indicate a loss of 120vAC power to the FPC cabinet, an issue with the standby batteries at the FPC cabinet, a ground fault condition, or other associated trouble condition. Maintenance personnel should be dispatched to the FPC cabinet to identify what the actual trouble condition is caused by. Systems Group should be notified immediately of the situation so that we can respond to the Site accordingly.

If additional trouble signals such as CCTV Sw Tbl or Deluge Circuit Tbl conditions are received, this would indicate that the BPS power supply has a failure condition, which could affect the FA CCTV System or the associated FA System deluge valves fed from the FPC cabinet. In this case, Systems Group should be notified immediately of the situation so that a service technician can be immediately dispatched to the site for repair.

In the event that a SLC Line Opened or Shorted Data Card signal is received:

This would indicate a trouble condition has occurred on the signaling line circuit that monitors and controls the associated field devices on that SLC circuit. The signaling line circuits have been designed with redundant pathways to operate with a single fault condition on the circuit, so the field devices will not be affected by this condition, dependent on the type of condition that has occurred. Systems Group should be notified immediately of the situation so that we can respond to the Site accordingly.

If additional field device troubles are received, this would indicate a more serious condition has occurred on the signaling line circuit, which could affect the deluge operation of the valves associated with the SLC circuit. In this case, Systems Group should be notified immediately of the situation so that a service technician can be immediately dispatched to the site for repair.

In the event that a Fire Alarm Control Panel Internal Fault signal is received:

This would indicate that a Fire Alarm Control Panel has an issue with one of the associated panel modules, which could compromise the systems' ability to respond to an alarm condition. Systems Group should be notified immediately of the situation so that a service technician can be immediately dispatched to the site for repair.

OTHER ABNORMAL SUPERVISORY OR TROUBLE CONDITIONS

In the event that an Emergency Generator Tbl signal is received:

This would indicate an issue has occurred on the Emergency Generator that could affect its ability to operate in an emergency situation. Maintenance personnel should be dispatched to the Emergency Generator to identify what the actual trouble condition is caused by.

800 E. 64th Avenue #17
Denver, CO 80229

Phone: 303-298-7900
Fax: 303-650-5667

In the event that the Fire Pump Phase Reversal signal is received:

This would indicate that an issue with the power source to the Fire Pump has occurred, which could affect its ability to operate in an emergency situation. Maintenance personnel should be dispatched to the Fire pump to identify what the actual trouble condition is caused by.

In the event that the Fire Pump Power Loss signal is received:

This would indicate that an issue with the power source to the Fire Pump has occurred, which could affect its ability to operate in an emergency situation. Maintenance personnel should be dispatched to the Fire pump to identify what the actual trouble condition is caused by.

In the event that the 60 Minute tank level signal is received:

This would indicate that the on-site water storage tank for the fixed fire suppression system has 60 minutes of water available for operation of the system. This signal indicates that the system has water available to perform its design system capacity.

In the event that the 30 Minute tank level signal is received:

This would indicate that the on-site water storage tank for the fixed fire suppression system has 30 minutes of water available for operation of the system. This signal indicates that the system has water available to perform 50% of its design system capacity.

In the event that the Boiler Tbl signal is received:

This would indicate an issue has occurred on the Boiler System that could affect its ability to operate in an emergency situation. Maintenance personnel should be dispatched to the Boiler System to identify what the actual trouble condition is caused by.

In the event that a valve tamper supervisory signal is received:

This would indicate a tamper valve on the fixed fire suppression system is in its off normal state, which could affect the system's ability to provide water to the affected event. A tamper valve signal for an individual deluge zone valve would affect that zone's ability to provide water to the affected event. If an isolation valve or valve associated with the Fire Pump signal is received, additional portions of the deluge system could be affected. In any event, maintenance personnel should be dispatched to the affected valve to identify what the actual supervisory condition is caused by.

800 E. 64th Avenue #17
Denver, CO 80229

Phone: 303-298-7900
Fax: 303-650-5667

In the event that an IVE (Insulated valve Enclosure) Low Temperature signal is received:

This would indicate that the temperature inside the associated IVE cabinet has reached its preset low temperature (less than 40F approximate) setting, which could mean that an IVE enclosure has been left open, or that the temperature of the deluge water supply loop has reached a low temperature that could compromise the ability of the fixed fire suppression to deliver water to the deluge valves. Maintenance personnel should be dispatched to the affected valve cabinet to identify what the actual supervisory condition is caused by.

In the event that an FPC (Fire Protection Cabinet) or RCP (Remote Control Panel) High or Low temperature signal is received:

This would indicate that the internal temperature in the FPC or RCP cabinet has reached a high or low temperature that is out of the normal operating range for the equipment inside the cabinet, which could affect the ability of the panel to operate correctly. Maintenance personnel should be dispatched to the affected fire alarm cabinet to identify what the actual supervisory condition is caused by.

In the event that one of the Fire Alarm Control Panel switch signals is received:

This signal would indicate that someone has inadvertently activated one of the FACP Panel front panel switches. These switches are typically used for maintenance purposes to prevent accidental release of water to the roadway during normal servicing or maintenance activities. Please note that these certain switches do disable (prevent) the deluge system(s) from activating in an emergency situation, so these switches should never be left in an activated condition. We have provided a flashing LED adjacent to each of these switches so the operator can easily identify a switch that has been left out of normal. These switches are located in each Control Room, the Facility Manager's Office, and at each remote Control Panel in the supply plenums. The System Operator needs to dispatch maintenance to the affected switch location immediately to restore the system to its normal condition.

In the event that a device trouble condition signal is received:

Typically, this signal would be received when a device has an issue that affects its ability to perform its required function. A single device trouble condition typically would not compromise the entire system, only the associated area of the system the device is responsible for. Systems Group should be notified immediately of the situation so that we can respond to the Site accordingly.

800 E. 64th Avenue #17
Denver, CO 80229

Phone: 303-298-7900
Fax: 303-650-5667

TYPICAL ALARM ACTIVATION OPERATION

Upon activation of the FOLHD System Primary or Secondary Alarm condition is received, the following events occur:

1. Flashing Red TSA (Touch Screen Area) illuminates on the Fireworks display. The System Operator can step thru the affected screens that are flashing, or can go immediately to the affected device via the Fireworks icons. See screen shots below.
2. The FA CCTV camera(s) position to affected deluge zone.
3. The affected deluge zone valve is activated. A manual input alarm is displayed indicating that the deluge valve has been activated.
4. The Fire Pump is started.
5. The Boiler Circulation Pumps are shutoff.
6. The Drainage Valve System positions to the appropriate tunnel (North or South) configuration.
7. Water is dispatched to the roadway.

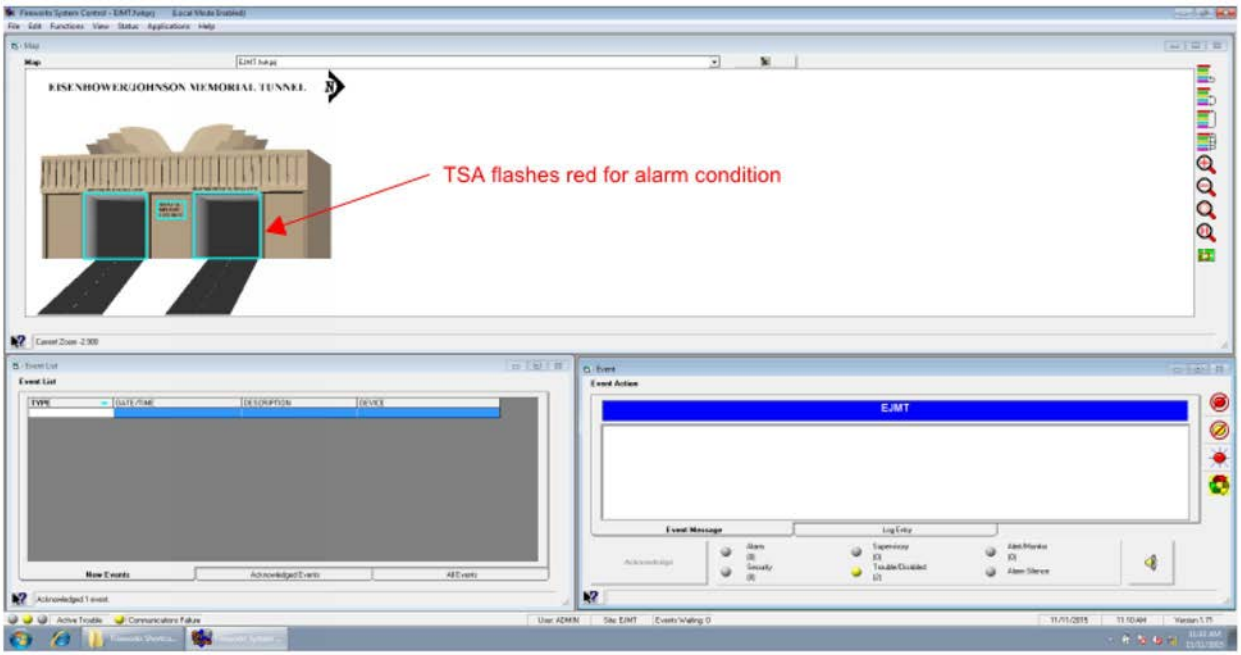

Main Fireworks Screen

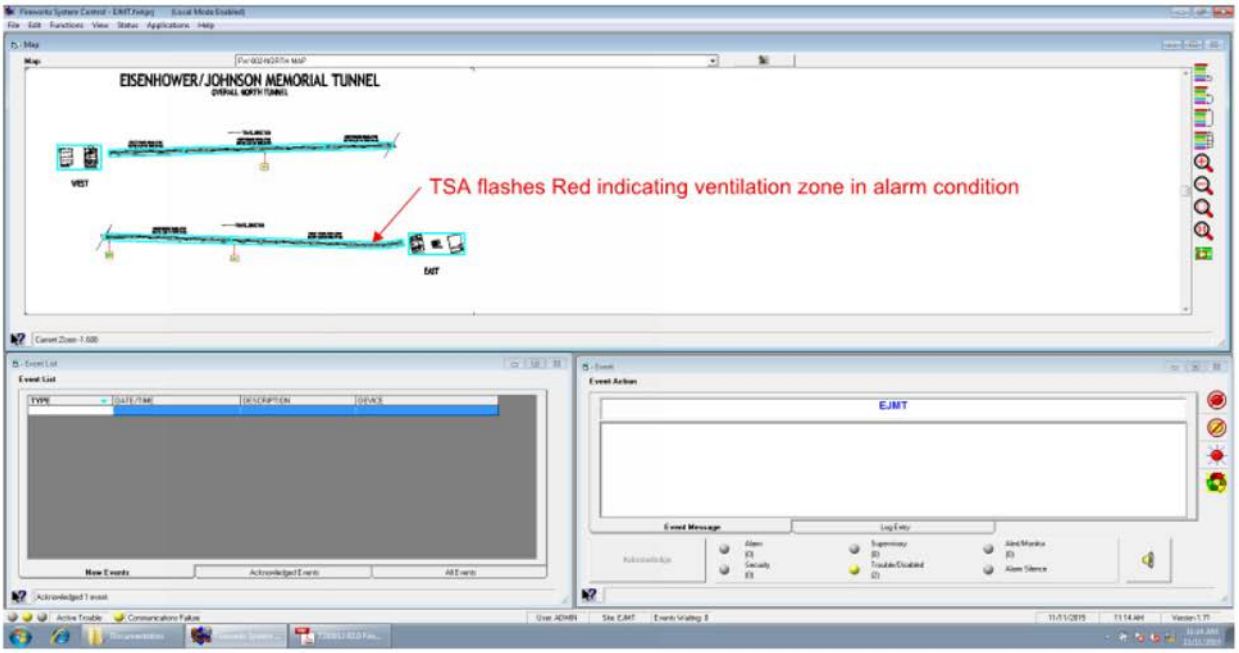

Tunnel Ventilation Screen (1st Layer)

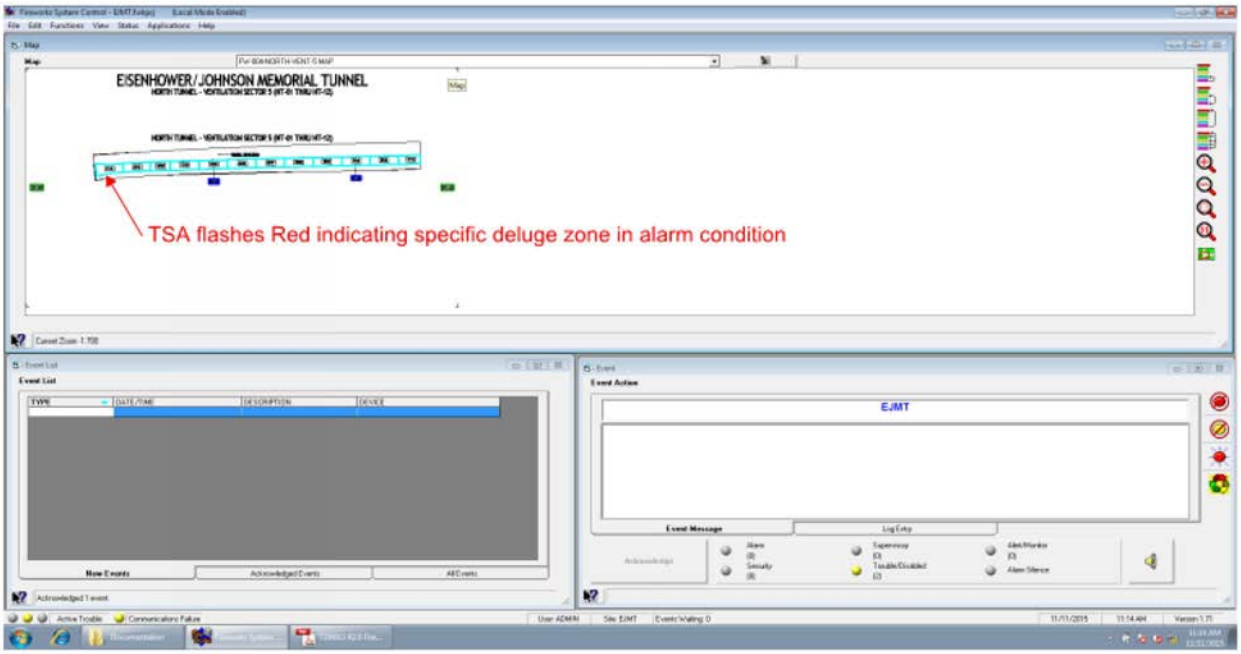

Deluge Zones per Ventilation Zone Screen (2nd Layer)

800 E. 64th Avenue #17
Denver, CO 80229

Phone: 303-298-7900
Fax: 303-650-5667

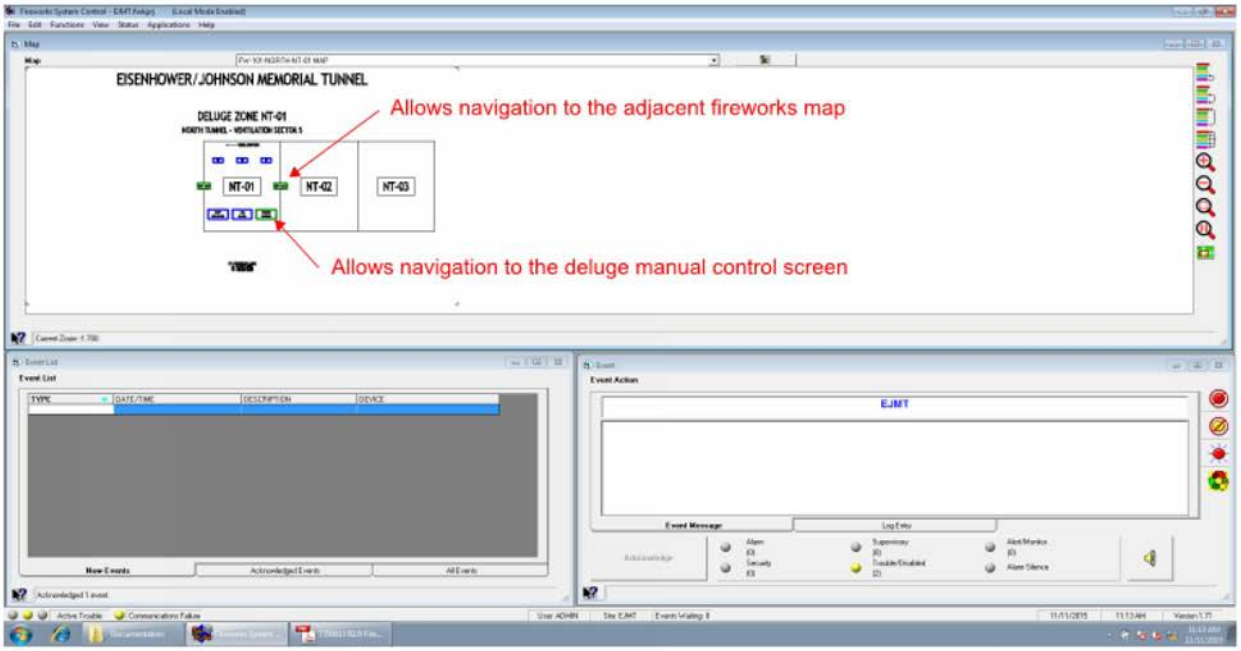

Deluge Zone Screen (3rd Layer)

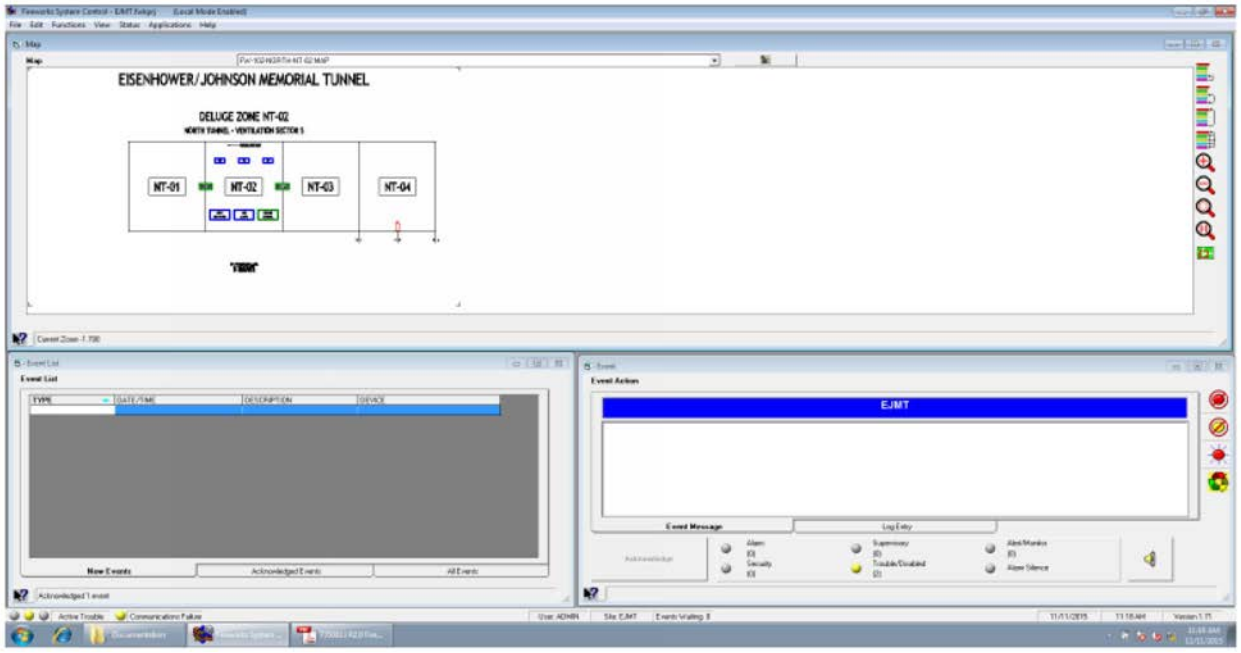

Adjacent Deluge Zone Screen

800 E. 64th Avenue #17
Denver, CO 80229
Phone: 303-298-7900
Fax: 303-650-5667

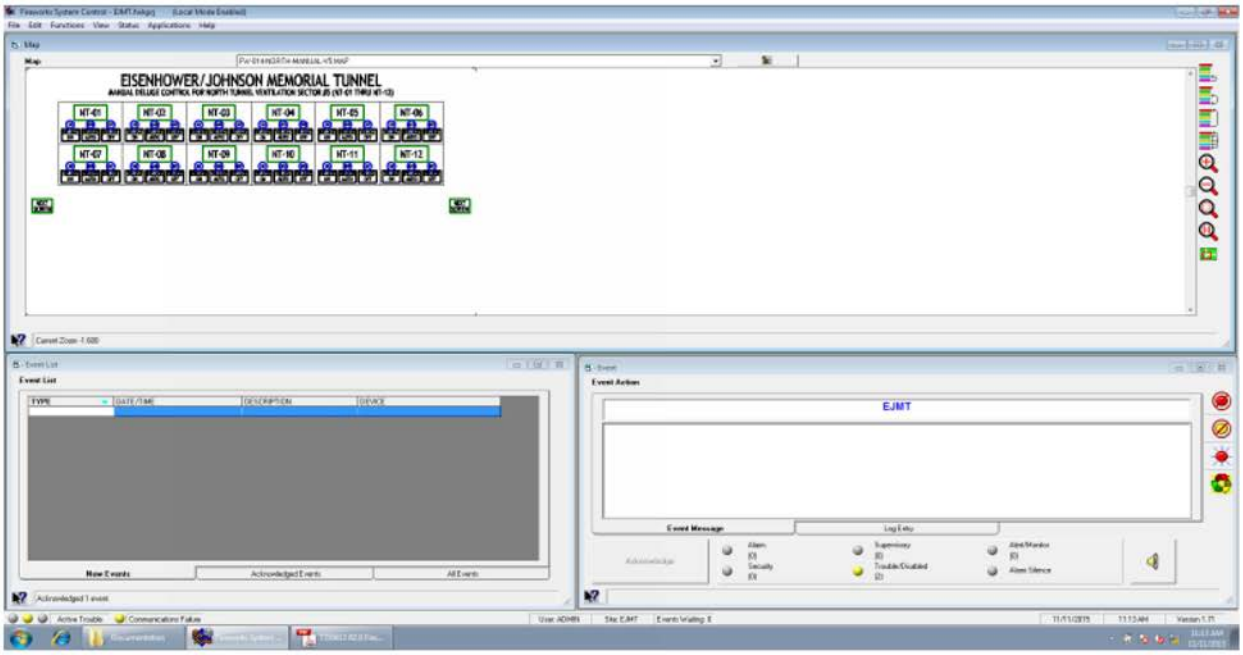

Manual Deluge Control Screen

Button	Definition
	Map Tree: Displays an explorer view of all maps, TSAs, devices, and text associated with your system. Maps, TSAs, devices, and text can be accessed directly by clicking the desired item.
	Parent Map: Branches up one map level to the current map. This is like following a TSA link in reverse, from destination map to source map. (Keyboard shortcut F9 and on the Functions menu.)
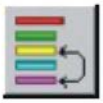	Previous Map: Switches back to the map previously displayed. Clicking this button repeatedly toggles the display between the last two maps displayed.
	Site Map: Branches directly to the site map from any location in the map system. The site map is the main map which is displayed when no active alarms are present. (Keyboard shortcut F7 and

800 E. 64th Avenue #17
Denver, CO 80229

Phone: 303-298-7900
Fax: 303-650-5667

	on the Functions menu.)
	Device Map: Branches directly to the map with the highest priority active device from any location in the map system. (Keyboard shortcut F5 and on the Functions menu.)
	Zoom In: Enlarges the viewing size of a map. Zooming in is much like moving toward a picture to get a better look at it.
	Zoom Out: Reduces the viewing size of a map. Zooming out is much like moving away from a picture to get a better look at it.
	Zoom Select: Used to draw a box around an area on a map to zoom in
	Zoom 1-to-1: Displays the actual size of the map
	Map Overview: Displays a pop-up window of the entire map. This can be helpful if you are zoomed in to a certain area on the map and want to see an overview of the whole map at the same time.

	Alarm Silence: Silences the audible notification appliances connected to the system
	Panel Silence: Silences the control panel's internal buzzer
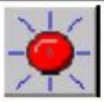	Drill: Forces all audible and visual notification appliances to the ON state
	Reset: Returns a control panel to normal if all of its devices have been restored
	Contacts: Opens the Contacts dialog box, which is used to contact and authenticate receiver event contacts. It is only enabled when a receiver event is selected that has associated contacts.
	Silence Workstation: Silences the workstation's internal buzzer and turns an event associated audio (AVI) file ON and OFF

Fireworks Control Buttons (Right Side of Map Viewer)

TYPICAL ALARM RESTORATION OPERATION

To restore the system after a deluge alarm event has occurred, the following steps occur:

1. The Reset icon is activated on the Fireworks display. See Screen Shot below.
2. The FOLHD Alarm condition(s) are reset on the first reset.
3. The Reset icon is again activated on the Fireworks display.
4. The deluge manual input alarm is reset, which turns OFF the water to the roadway and resets the deluge control valve.
5. The FA CCTV cameras return to their normal non-alarm “HOME” positions.
6. At this point, the system should be showing NO alarm conditions; however, several additional steps need to be performed to return the System back to its normal operating condition.

7. Depending on which tunnel has been activated, the associated Drainage Valve switch needs to be activated. This switch activation restores the drainage control valves to their normal position. This manual switch restoration switch allows the System to keep the drainage valves in their active position until the drainage tank wastewater can be dealt with and allow the remainder of the System to go back to its normal operating condition. Please note that these affected drainage valves will remain active (causing a supervisory active signal) to remain on the panel until the drainage valve switch has been activated.

8. The Boiler Circulation Pump switch needs to be activated. Like above, this switch restores the boiler circulation pumps to their normal operation. This manual switch allows the boiler circulation pumps to remain off while the remainder of the deluge system water valves are restored to normal. Typically, this Boiler Circulation Pump switch would be activated several minutes after a water discharge event has occurred.

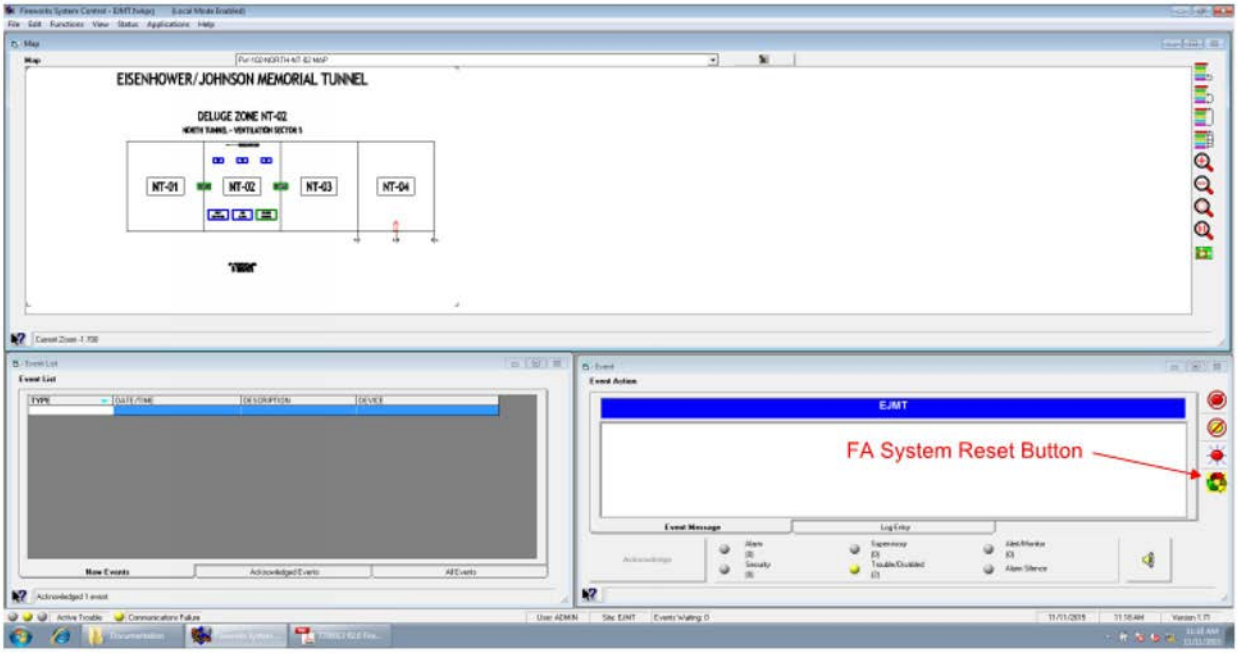

Fireworks Reset Button Location

TYPICAL MANUAL CONTROL OPERATION – FA CCTV SYSTEM

The FA CCTV System allows the System Operator to adjust the FA CCTV camera views at any time. The FA CCTV cameras will automatically position to their pre-set positions dependent on the alarm condition received. At that point, the System Operator can again take manual control of the FA CCTV cameras as desired until another alarm is received, or the system is reset. The additional alarm condition would cause the FA CCTV cameras to re-position to that pre-set position or to their "HOME" positions if the System is reset.

800 E. 64th Avenue #17
Denver, CO 80229

Phone: 303-298-7900
Fax: 303-650-5667

TYPICAL MANUAL CONTROL OPERATION – FA SYSTEM

The FA System allows manual control of the system during alarm events and also during normal non-alarm operation as required by the situation.

Assuming the System is in alarm, with active deluge system flowing water, the System Operator can take manual control of the system and activate and additional deluge zone or turn off the deluge zone that was activated. This is done as follows:

1. The Manual Deluge Control screen is brought up on the Fireworks display system. See Screen Shots below.
2. The existing deluge valve that is flowing water is indicated by a RED circle in the deluge zone box.
3. The operator can subsequently select an additional deluge zone to be activated by selecting the "DELUGE ON" box in the desired zone. The System asks if you are sure that you want to activate the output. By clicking YES, the deluge zone is then activated.
4. Once the next zone is activated, the Red circle in the deluge zone box illuminates.
5. The System Operator can also turn OFF the zone by activating the DELUGE OFF box for the desired zone.
6. Once the deluge zone has been turned off, the Yellow circle will illuminate.

It is important to note that the System operator can turn deluge zones ON and OFF as warranted by the emergency situation, with the knowledge that the fixed fire suppression is designed to operate with two (2) active deluge zones at any time. It is important to note that activating a second zone would be done by activating the DELUGE ON box for the second zone.

If the Operator needs to activate an additional zone when 2 zones are already active, the System Operator activates the third zone by hitting the Deluge ON box and then subsequently operates the DELUGE OFF button for the zone that needs to be turned off to prevent any water hammer issues. It is important to note that activating a second zone would be done by activating the DELUGE ON box for the second zone.

Once the emergency situation is cleared, the System Operator can subsequently restore the automatic and manual control functions of the System as follows:

1. Turn off the affected deluge zone(s) by activating the DELUGE OFF box for the automatic and/or manual controlled zone.
2. The Yellow Deluge Off light(s) will illuminate.

3. The System Operator initiates a reset on the System, which will clear the automatic controlled deluge valves.

4. The System operator then selects the DELUGE AUTO button for the affected zone(s) and the yellow light switches from the OFF position to the AUTO position.

5. The System Operator then resets the system again, which will restore the automatic and manual functions to normal.

6. Please note that the Boiler Circulation Pump and Drainage Valve switches would need to be activated as described above to fully restore the System to normal.

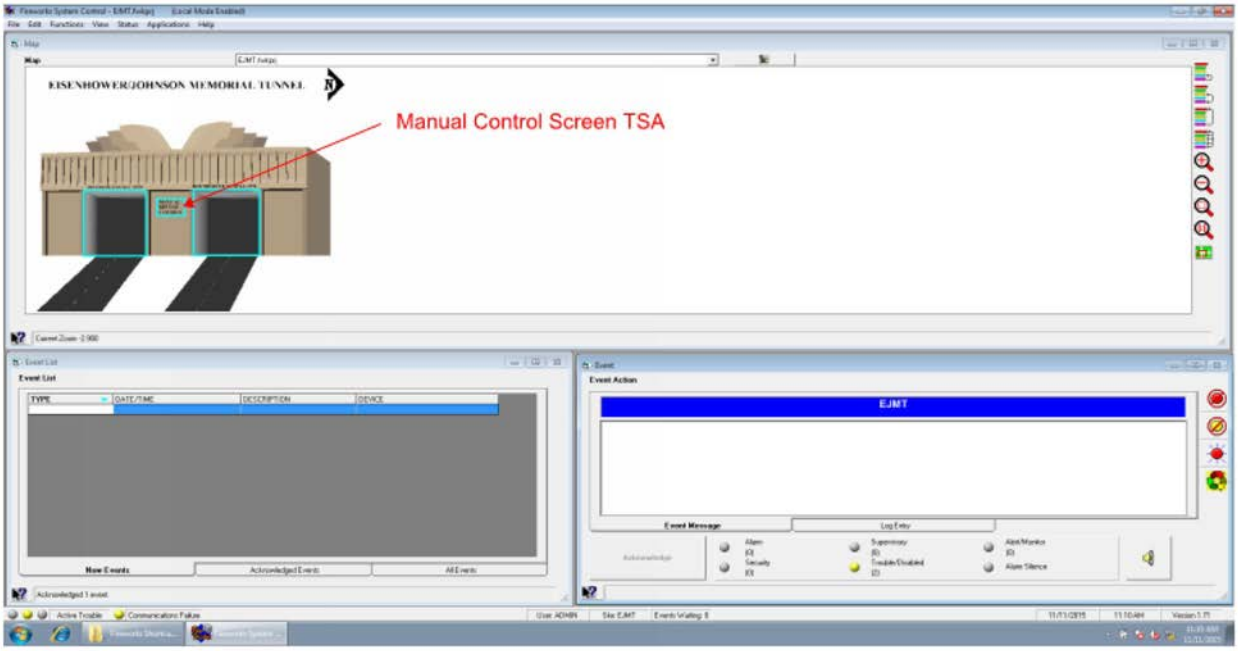

Manual Control Screen Navigation from Main Fireworks Screen

800 E. 64th Avenue #17
Denver, CO 80229

Phone: 303-298-7900
Fax: 303-650-5667

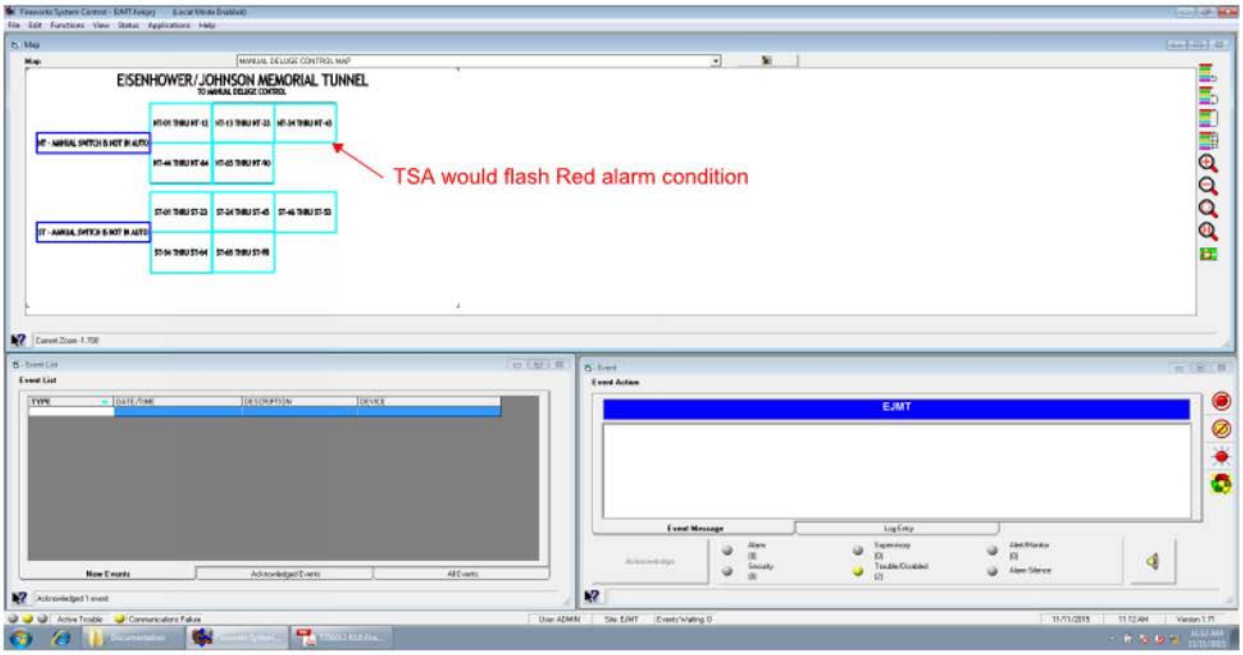

Manual Deluge Control Screen by Ventilation Zone (1st Layer)

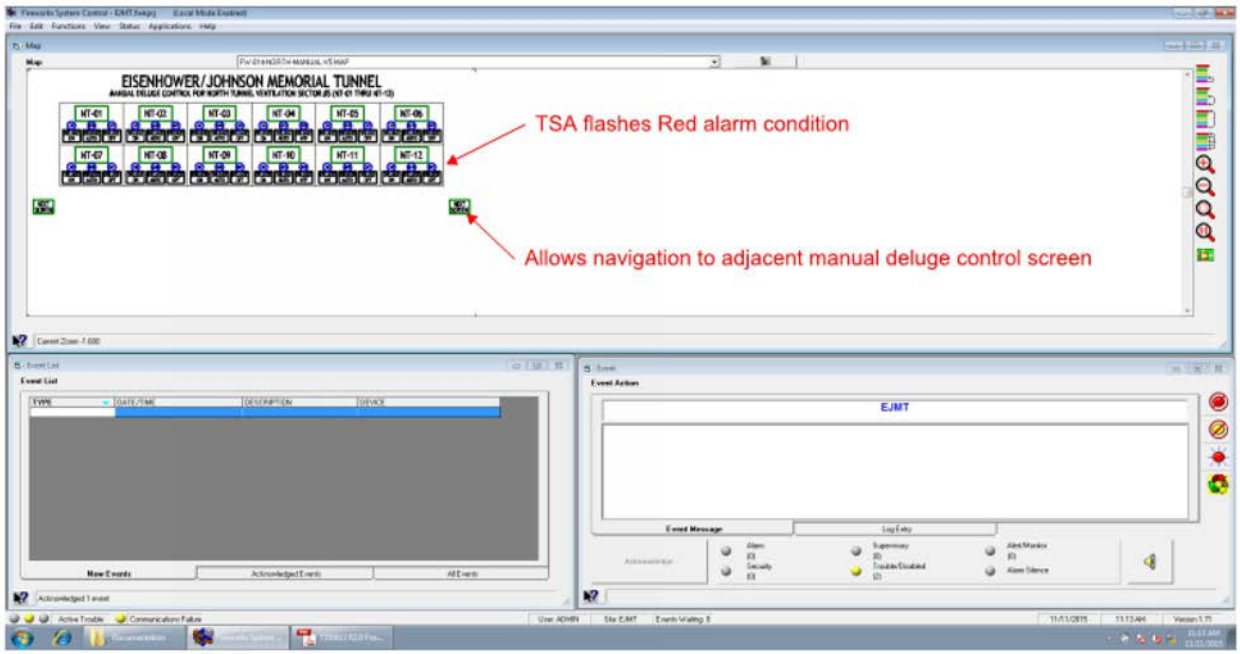

Manual Deluge Control Screen (2nd Layer)

800 E. 64th Avenue #17
Denver, CO 80229
Phone: 303-298-7900
Fax: 303-650-5667

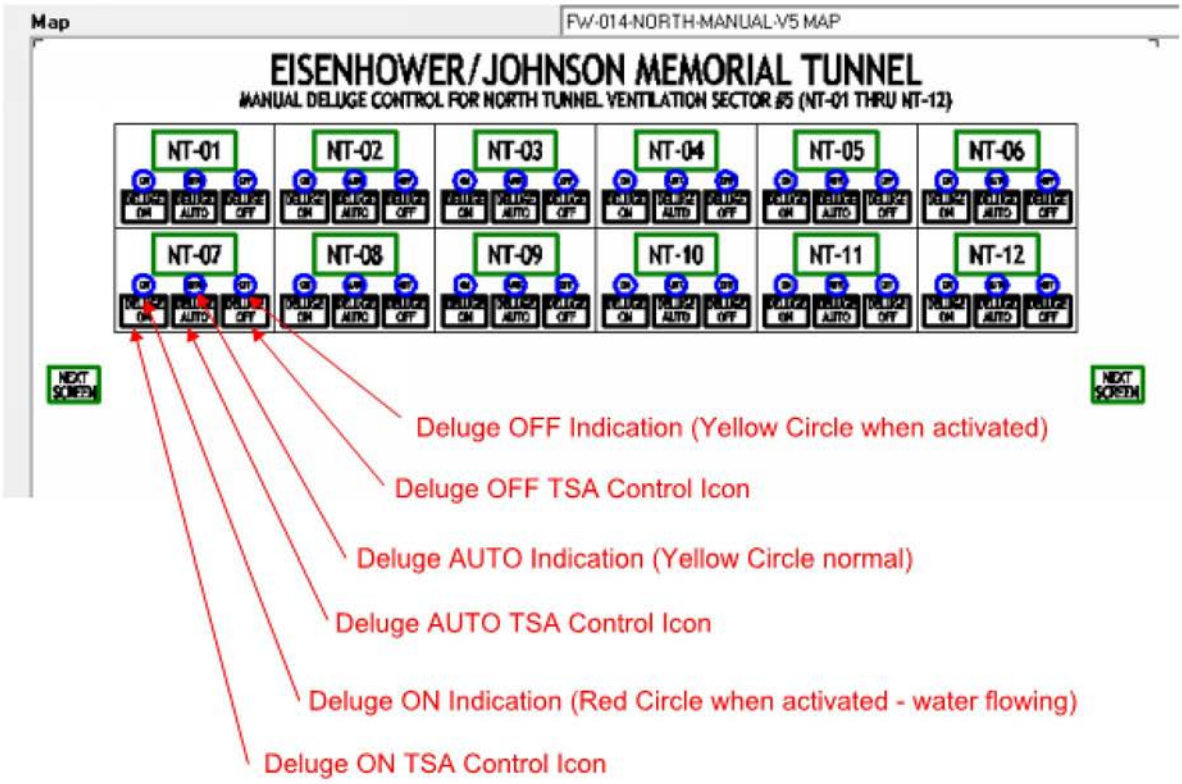

Manual Deluge Control Screen TSA/Indicators

End of Operations Plan

4.0 ELECTRICAL SYSTEM

Sturgeon Electric Company, Inc.

12150 East 112th Avenue

Henderson, CO 80640

303-286-8000

Sturgeon Electric, Inc.
Training Syllabus Table of Contents

Eisenhower/Johnson Memorial Tunnel Fire Suppression System

Scope of Training:

As part of our service for the installation of the electrical system for the Fire Suppression Retrofit we are providing Maintenance and Operations Training. This training will be provided in two sessions. The first is training for the electrical system as a whole as well as the Eaton gear. This is to be provided by Sturgeon Personnel and an Eaton representative. This Sturgeon portion will involve a review of the project, circuitry descriptions, maintenance procedures, etc…. The Eaton portion will involve training for the panel boards and transformers.

The second training session will be provided by Sturgeon personnel and a Cummins Rocky Mountain Power Generation training rep. This training will be on December 1st and will be the training for the generator, the remote annunciator panel, and the automatic transfer switch.

Table of Contents

I. Session one
   a. Overview
   b. Panels
      i. General Layout
      ii. Circuit Description
      iii. Eaton Training
   c. Maintenance and Operations Training Electrical Systems
      i. FOLHD System (hardware installation only)
      ii. Conduit System
      iii. FPC/RCP Transformer Training

II. Session Two (Dec 1)
   a. Cummins
   b. Generator Set Training
   c. Remote Annunciator Panel Training
   d. Generator Enclosure
   e. Automatic Transfer Switch Training

Sturgeon Electric Company, Inc.
12150 East 112th Avenue
Henderson, CO 80640
303-286-8000

Session One Training Syllabus

Approximately 4 1/2 Hours

I. Introductions and review provided material- **5 Min**
II. General Layout and review of Electrical installation- **5-10 Min**
   a. Quick Review of all Systems Installed
III. Gear and Transformers- **15-20 Min**
   a. Overview of Equipment Installed
   b. Circuit Description-
      i. Review the circuitry of the newly installed panels.
         1. EMWH1 Panel Circuitry
         2. EMWL1 Panel Circuitry
         3. EMEL1 Panel Circuitry
   c. Eaton Training (see syllabus below)
IV. Gear and Transformers- **3 Hours** (including Eaton Training)
   a. Discuss potential problem areas or concerns, if any,
   b. Systems
      i. FOLHD Hanger
      ii. Plenum Conduit System
      iii. Electrical Gear Installation
      iv. Generator Installation
      v. Drainage Conduit System
V. Maintenance/Operations Training Electrical Systems- **30 min - 1 hour**
   a. Review the steps that should be undertaken to properly maintain the electrical system
      i. FOLHD Hanger
      ii. Plenum Conduit System
      iii. Electrical Gear Installation
      iv. Generator Installation
      v. Drainage Conduit System
VI. Q and A **5-20 Min**

Sturgeon Electric Company, Inc.
12150 East 112th Avenue
Henderson, CO 80640
303-286-8000

Panel board Training Agenda

1 ½ Hours

I. Intro/Overview of O&M Manuals- **5 Min**

II. Breaker Assembly- **15 Min**
   a. Basic Construction – Molded Case vs. Power Breakers
   b. Breaker Ratings
   c. Trip functions / Secondary wiring

III. Removal Procedures- **15 Min**
   a. Fixed mount

IV. Operation, Adjustment & Testing- **15 Min**
   a. Switching operations
   b. Adjustments
      i. Clearances & Procedures

V. Troubleshooting Problems
   a. Common mistakes
   b. Quick Fixes

VI. Maintenance & Lubrication Procedures- **15 Min**
   a. De-Energization
      i. Lock-out / Tag-out
   b. Maintenance – Cleaning
   c. Maintenance – Lubrication
   d. Approved Chemicals & Lubricants
   e. Torque Specs

VII. Renewal Parts- **15 Min**
   a. Common Replacement Parts
   b. Ordering Renewal Parts

Sturgeon Electric Company, Inc.
12150 East 112th Avenue
Henderson, CO 80640
303-286-8000

VIII. Warranty and Service Protocol- **15 Min**

a. Service
   - **i.** Who to Call
   - **ii.** What Information is Required

b. Warranty Terms
   - **i.** What is Covered
   - **ii.** Who to Call
   - iii. What Information is Required

Transformer Training Agenda 1 Hr

I. GENERAL SYSTEM OVERVIEW- **20 Min**

a. The technical review of the operating parameters is conducted in a classroom. The materials required involve:
   - i. An area large enough to handle the students.
   - ii. A copy of the final as-built drawings
   - iii. A table to layout drawings, literature, and booklets.

b. On site review of the actual equipment
   - i. On site review is conducted in the substation utilizing the actual equipment
   - ii. The instructor will cover the following topics:
     1. The physical layout of the transformer
     2. Locate the protective devices and describe their purpose.

II. MECHANICAL- **20 Min**

a. Technical review of the operating requirements
   - i. The technical review of the operating parameters is conducted in a classroom.
   - ii. The instructor will cover the following topics:
     1. The mechanical construction of the transformer.
     2. Safety Concerns

Sturgeon Electric Company, Inc.
12150 East 112th Avenue
Henderson, CO 80640
303-286-8000

3. Primary and secondary winding construction
4. Tap Selection
5. Primary Cable and Secondary Bus Connections

III. ELECTRICAL- **20 Min**

a. Technical review of the operating requirements

b. The instructor will cover the following topics:

i. De-energizing

ii. Tap Selection

iii. Expected voltage levels

Liability Disclaimer

•The attached training program presents general principals regarding maintenance and repair of electrical distribution equipment. It cannot cover all possible situations or problems, which might arise. Individuals should contact an Eaton - Electrical Service and Systems representative, or other qualified individual, if questions arise. Only qualified electricians who are familiar with the installation and maintenance of electrical distribution equipment should perform work associated with such products.

•All recommendations of the manufacturer, warnings and cautions relating to the safety of personnel and equipment should be followed. All applicable health and safety laws, codes, standards and procedures should be strictly adhered to. Eaton Corporation will not be responsible for the misuse or misapplication of the information contained in this program.

Sturgeon Electric Company, Inc.

12150 East 112th Avenue

Henderson, CO 80640

303-286-8000

Eisenhower – Johnson Tunnel Training Agenda

The training for the equipment supplied by Cummins Rocky Mountain for the Eisenhower – Johnson Tunnel project will be conducted, on a yet to be determined date, by Keith Harty. Keith is one of Cummins Rocky Mountain's top technicians, and he has extensive experience and factory training in setup, testing, operation and repair of the equipment supplied on this project.

Classroom training will cover safety, lock-out/tag-out procedures, personal protective equipment, purpose and overview of the standby generator, associated equipment, and general maintenance requirements. A discussion of the information in the operator's manual for the generator set will happen prior to walk around presentation/demonstration of the equipment. Copies of all material presented will be provided. The classroom session for the generator will require approximately one and half hours and the walk around presentations will cover an hour.

During the walk around presentation all maintenance items will be pointed out and discussed in detail by the trainer, followed by a questions and answer session. Major items include but are not limited to; engine lube oil, filters, engine coolant heaters, and locations of key engine temperature, pressure transducers, and sensors located on the engine. Proper starting battery maintenance and locations for checking fluid levels and adding fluids will also be covered. The generator control panel operation and supervisory functions will also be discussed and demonstrated.

Sturgeon Electric Company, Inc.
12150 East 112th Avenue
Henderson, CO 80640
303-286-8000

Session Two Training Agenda (Dec 1)
Generator

I. Introductions- **5 Min**

II. Review and familiarization of provided material- **5 Min**

III. Safety and PPE – **10 Min**
   a. Electrical
   b. Moving Parts
   c. Heat
   d. Noise

IV. Equipment Overview. Note: Topics also covered during hands-on and walk around- **30 Min**
   a. Generator Set
      i. Engine (Sensors, Radiator, Exhaust)
      ii. Generator (Theory of Operation)
      iii. Control Panel (Interface, Functions, and Menus)
      iv. Automatic transfer switch
      v. Auxiliary Equipment (Block Heater, Battery Charger, Annunciators)

V. Purpose of Equipment- **15 Min**
   a. Industrial Standby/Emergency Power for use during Utility outages

VI. Maintenance. Note: Topics also covered during hands-on and walk- **15 Min**
   a. CRM contracts
      i. Minor PMs and Major PMs
      ii. Battery replacement
      iii. Various emergency procedures, (loss of coolant, oil, resetting faults)

Sturgeon Electric Company, Inc.
12150 East 112th Avenue
Henderson, CO 80640
303-286-8000

VII. Hands-On and Walk Around of Equipment- 1 **Hour**

a. Engine, sensors, accessories, radiator, cooling etc.
b. Alternator
c. Control, switches, menus and navigation, adjustments
d. Demonstration and engine run
e. Automatic transfer switches and remote annunciators
f. Final question and answer session.

Sturgeon Electric Company, Inc.
12150 East 112th Avenue
Henderson, CO 80640
303-286-8000

STAFF ORGANIZATION CHART AND STAFFING PLAN:

Jeff Waneka- President, Commercial and Industrial- Henderson, CO

Don Eagan- Vice President

Licensed Electrician

Francis Marcotte- Operations Manger- Henderson, Colorado

Licensed Electrician

Jason Willis- Project Manager- Henderson, Colorado

Master Electrician

Nate Ziemer- Foreman- Henderson, Colorado

Licensed Electrician

Matt McMahon- Superintendant- Henderson, Colorado

Licensed Electrician

Tyler Clark- Project Engineer- Henderson, Colorado

Sturgeon Electric Company, Inc.
12150 East 112th Avenue
Henderson, CO 80640
303-286-8000

Electrical System

Overview-

The new EJMT fire suppression system includes additions and modifications to the existing electrical systems in both the east and west portal buildings. The major electrical components of the fire suppression system include: three (3) new electrical panels, electrical connection to fire alarm panels and fire protection cabinets including 500 va XFMRS, fiber optic linear heat detection systems, video camera, three (3) work stations, and associated flat screens displays. The electronic equipment associated with these systems also have battery backup. Additionally, a new generator has been installed at the west portal building to provide backup electrical power for these major components in the event of a power failure. The existing east portal building generator provides backup electrical power for system electronic equipment powered from the east electrical distribution system.

West Portal Building-

The power for the fire suppression equipment on the west side of the tunnel comes from the switch gear in the west side electrical room. Fed from an existing 1600a breaker, power is run to a 250a bussed gutter mounted in the west end pump room. From this gutter power is run to the fire pump controller and 150a 3 pole ATS Switch. Power runs from this switch to the generator and to the new EMWH1 Panel.

This new 480v 3phase panel powers all other equipment associated with the fire suppression system on the west side including: the boiler skid, fire protection cabinets, remote control cabinets, zone valves, and the new EMWL1 208Y/120V, 100A, 3-phase panel. This low voltage panel provides power to the boiler room lighting, fiber optic linear heat detection system, video cameras, work station, and associated flat screen displays in the west portal building.

From EMWH1 two (one per tunnel) a runs of ¾" IMC containing 480v, 30a, 3-phase circuits have been installed from the west portal building to power the fire protection cabinets, remote control cabinets, and valve cabinets located in the west half of each plenum. A small step-down transformer installed at each remote control panel and fire protection cabinet will provide the 120v power needed to control and monitor all the fire suppression remote mounted equipment.

Two additional runs of ¾" IMC have been installed to provide power from EMWL1 to the cameras and to the sprinkler system. Additionally, a 1" length of IMC has been installed containing single mode and multimode fiber optic cable. This fiber connects the cameras and fire protection system to the control room

Finally, a new 350kw (de-rated to 238kw) generator has been installed to provide standby power to all fire suppression equipment described above. In addition to the generator, all electrical system equipment has a battery backup. These batteries will keep all equipment powered during and AC power transition between utility and generator sources.

Sturgeon Electric Company, Inc.
12150 East 112th Avenue
Henderson, CO 80640
303-286-8000

East Portal Building

The new fire suppression system equipment located in the east portal building requires very little power. Three new circuit breakers have been installed in panel EV to power two (2) 480v, 3-phase circuits needed for fire suppression system equipment that have been installed in the east half of each plenum, and a 30KVA 480v-208/120v Transformer and 208y/120V, 100A, 3-phase panel. This low voltage panel powers the fire alarm panel, fiber optic linear heat detection system, video cameras, work stations, and associated flat screen displays in the east portal building. A small step-down transformer installed at each panel will provide the 120v power needed to control and monitor all the fire suppression system remote mounted equipment.

The same conduit system (three ¾" and one 1" IMC) from the west plenum has been installed in the east plenum.

The fire alarm panels, fiber optic linear heat detection system, video cameras, two work stations, and flat screen displays are backed up by the existing emergency power system. Located in the main electrical room is a 480Y/277V, 1,200A generator backed up panel with spare space and capacity for all the fire suppression system components that are powered from the east portal building. In addition to the generator, all electrical system equipment is battery backed up. These batteries will keep all equipment powered during an AC power transition between utility and generator sources.

Water released during a fire event will be collected in existing and new collection tanks. New valves have been installed in the existing sewer treatment room and new manhole 2 to divert water into these tanks. These valves will be controlled by the fire protection system. Finally, as part of the fire suppression project, a new level sensor has been installed in the collection tank system and monitored by the fire alarm system.

Sturgeon ELECTRIC
12150 E 112TH AVE, HENDERSON, CO 80640

MYR GROUP

ELECTRICAL GEAR INSTALLATION

PREPARED BY: **Jason Willis**
CELL PHONE: **(303) 944-1190**
FAX: **(303) 227-6978**
OFFICE: **303-286-8000**
EMAIL: **JWillis@myrgroup.com**

** Respect * Integrity * Responsiveness **
** Creativity * Initiative * Team Work * Safety **

SECo No.: 841323

Sturgeon Electric Company, Inc.
12150 East 112th Avenue
Henderson, CO 80640
303-286-8000

Gear Installation-

West Portal Building-

The power for the fire suppression equipment on the west side of the tunnel comes from the switch gear in the west side electrical room. Fed from an existing 1600a breaker, power is run to a 250a bussed gutter mounted in the west end pump room. From this gutter, power is run to the fire pump controller and 150a 3 pole ATS Switch. Power runs from this switch to the generator and to the new EMWH1 Panel.

This new 480v 3 phase panel powers all other equipment associated with the fire suppression system on the west side including: the boiler skid, fire protection cabinets, remote control cabinets, zone valves, and the new EMWL1 208Y/120V, 100A, 3-phase panel. This low voltage panel provides power to the boiler room lighting, fiber optic linear heat detection system, video cameras, work station, and associated flat screen displays in the west portal building.

The maintenance and operations of the gear itself is to be covered by the representatives from Eaton.

Cutler-Hammer

Current Cutler-Hammer Panelboards

Renewal Parts

Supersedes RP.38F.01.T.E
pages 1 – 48 dated February 2000

Description	*Page*
Current Cutler-Hammer Panelboards	
PRL1a and PRL2a	5
Trim Locks	19
PRL3a	21
PRL4B/F	26
PRL5P	35
Branch Devices	37
PRL1a-LX and PRL2a-LX	41
Pow-R-Command™	42

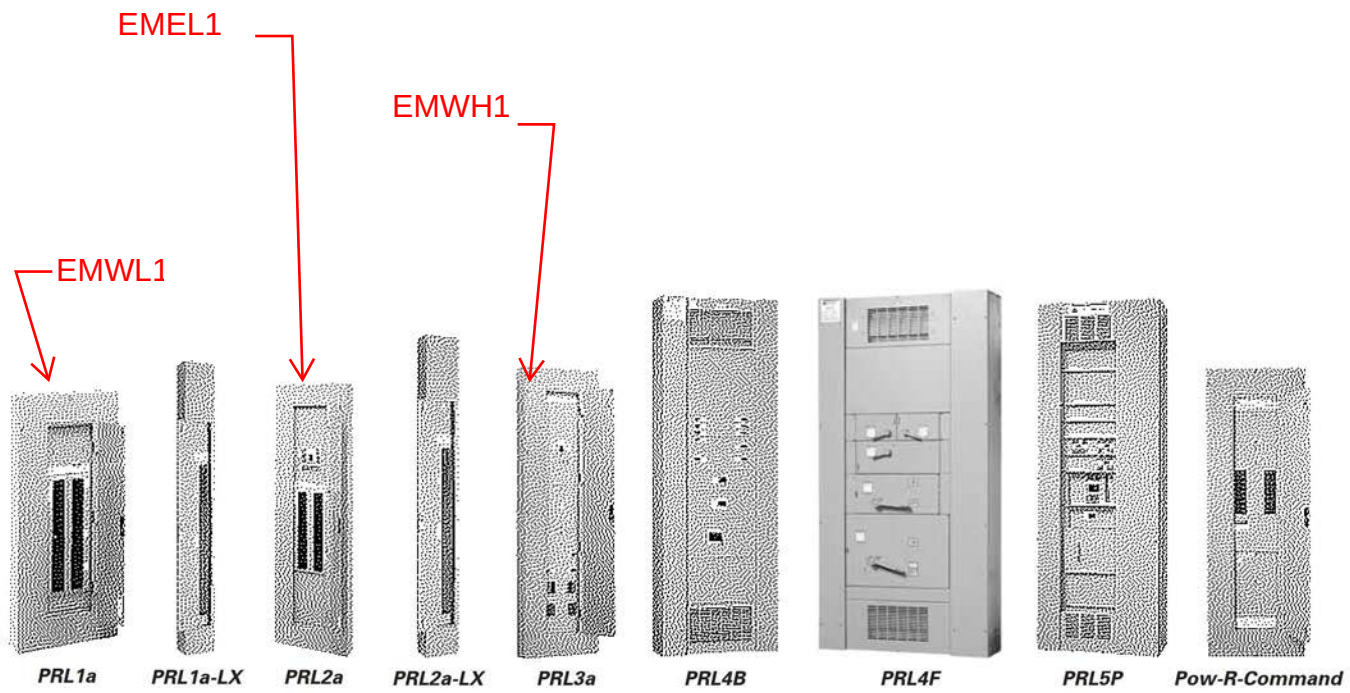

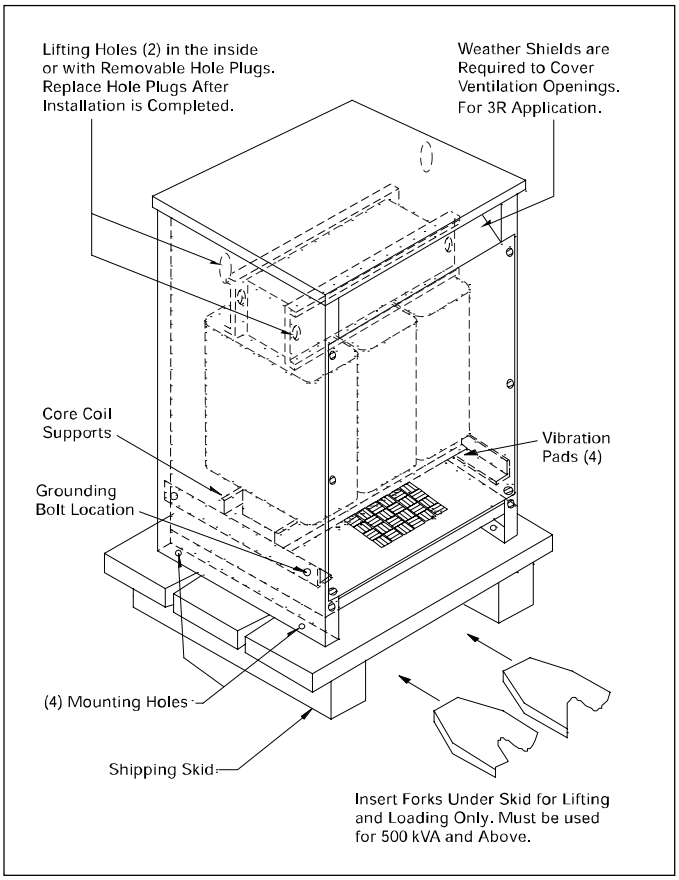

Figure 1 Typical Ventilated Transformer.

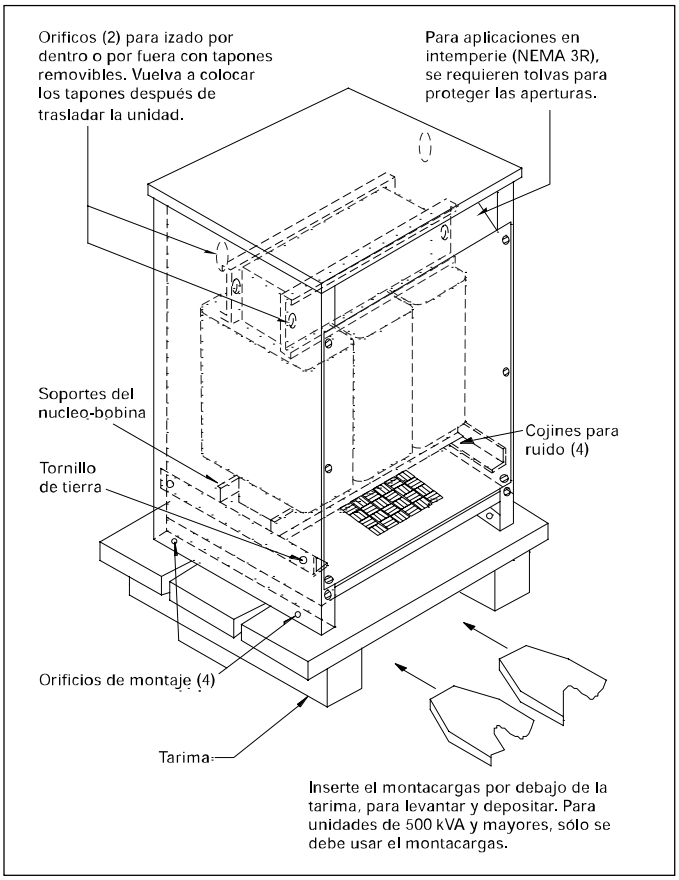

Figura 1 Transformador típico ventilado.

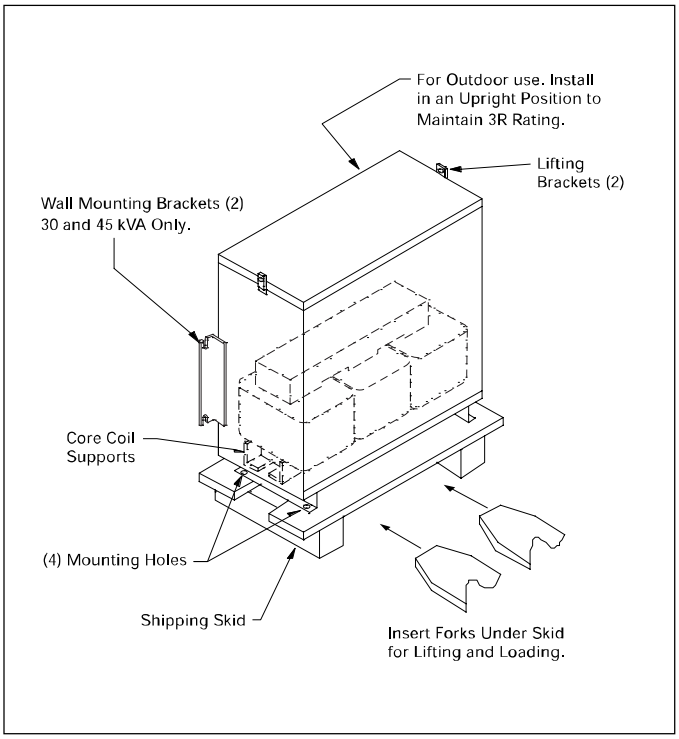

Figure 2 Typical Encapsulated Transformer.

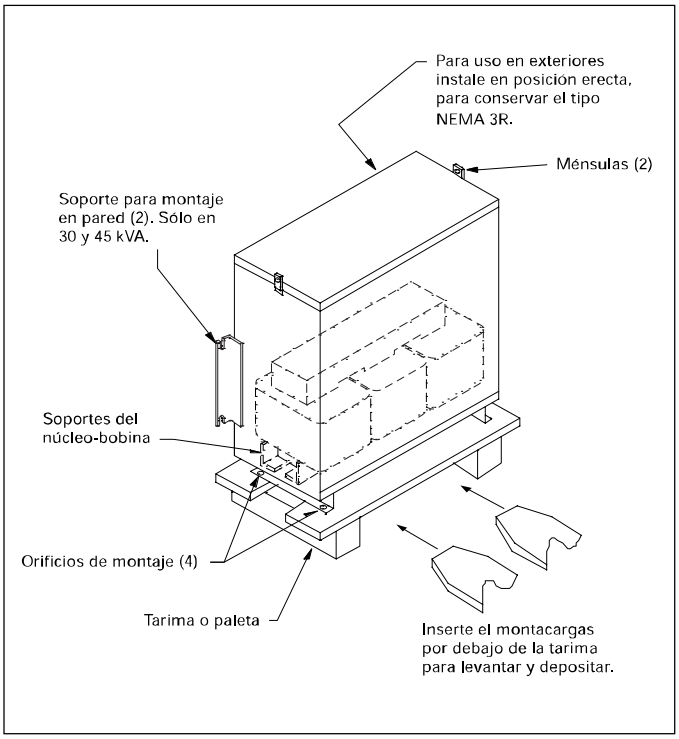

Figura 2 Transformador típico encapsulado.

Safety Switches

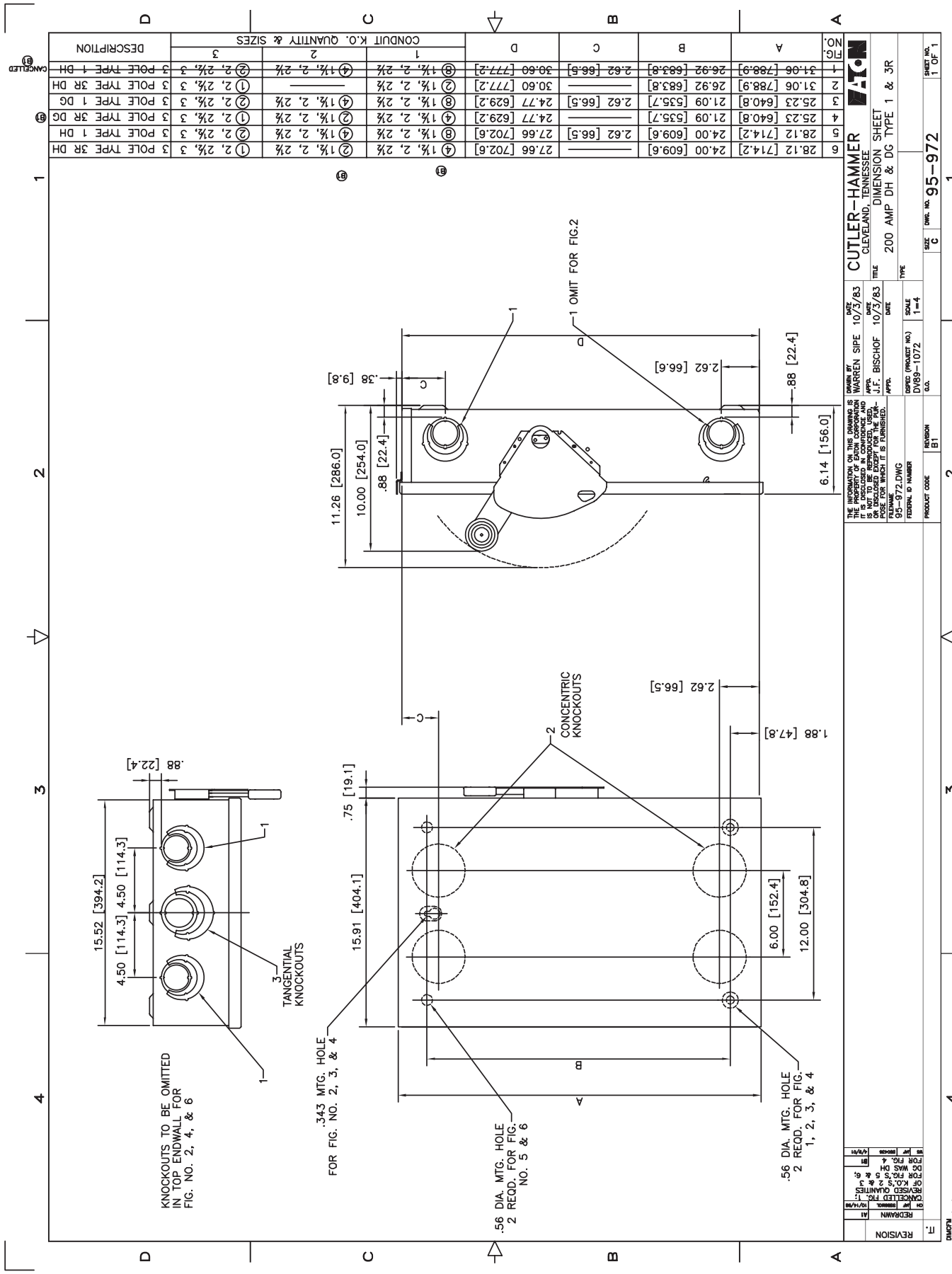

NO.	A	B	C	D	CONDUIT K.O. QUANTITY & SIZES 1	2	3	DESCRIPTION
1	31.06 [788.9]	26.92 [683.8]	2.62 [66.5]	30.60 [777.2]	⑧ 1⅛, 2, 2⅜	④ 1⅛, 2, 2⅜	② 2, 2⅜, 3	3 POLE TYPE 1 DH
2	31.06 [788.9]	26.92 [683.8]	———	30.60 [777.2]	② 1⅛, 2, 2⅜	———	① 2, 2⅜, 3	3 POLE TYPE 3R DH
3	25.23 [640.8]	21.09 [535.7]	2.62 [66.5]	24.77 [629.2]	⑧ 1⅛, 2, 2⅜	④ 1⅛, 2, 2⅜	② 2, 2⅜, 3	3 POLE TYPE 1 DG
4	25.23 [640.8]	21.09 [535.7]	———	24.77 [629.2]	④ 1⅛, 2, 2⅜	② 1⅛, 2, 2⅜	① 2, 2⅜, 3	3 POLE TYPE 3R DG
5	28.12 [714.2]	24.00 [609.6]	2.62 [66.5]	27.66 [702.6]	⑧ 1⅛, 2, 2⅜	④ 1⅛, 2, 2⅜	② 2, 2⅜, 3	3 POLE TYPE 1 DH
6	28.12 [714.2]	24.00 [609.6]	———	27.66 [702.6]	④ 1⅛, 2, 2⅜	② 1⅛, 2, 2⅜	① 2, 2⅜, 3	3 POLE TYPE 3R DH

GO/NEG-Alt-Date:		Job Name:
SDN0598403-R000-4/23/2015		CDOT - EJMT
Item Number:	**Catalog Number:**	**Designation:**
006	DH364FGK	200A/3P/F/N1

West Side Electrical

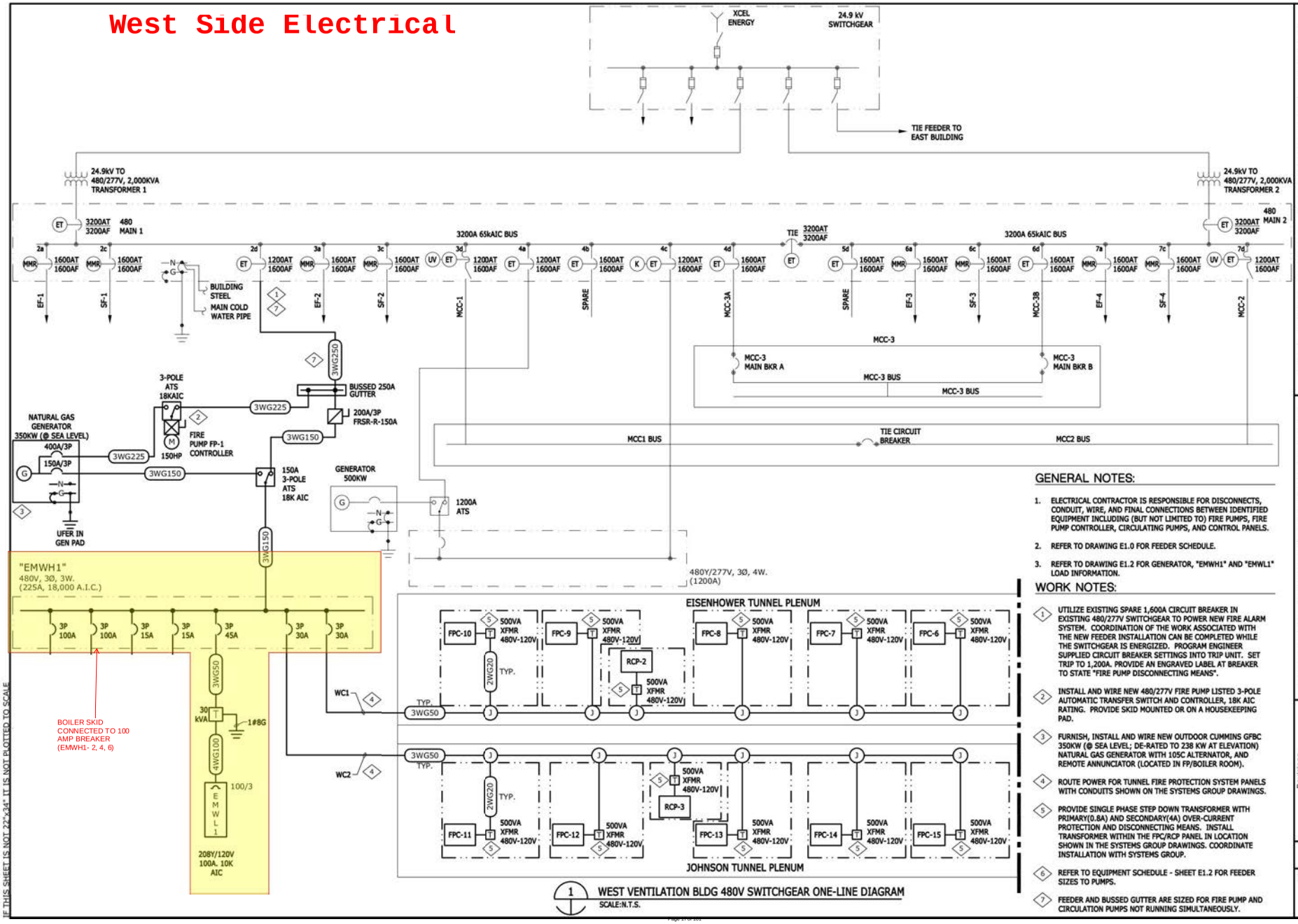

1 WEST VENTILATION BLDG 480V SWITCHGEAR ONE-LINE DIAGRAM
SCALE:N.T.S.

GENERAL NOTES:

1. ELECTRICAL CONTRACTOR IS RESPONSIBLE FOR DISCONNECTS, CONDUIT, WIRE, AND FINAL CONNECTIONS BETWEEN IDENTIFIED EQUIPMENT INCLUDING (BUT NOT LIMITED TO) FIRE PUMPS, FIRE PUMP CONTROLLER, CIRCULATING PUMPS, AND CONTROL PANELS.
2. REFER TO DRAWING E1.0 FOR FEEDER SCHEDULE.
3. REFER TO DRAWING E1.2 FOR GENERATOR, "EMWH1" AND "EMWL1" LOAD INFORMATION.

WORK NOTES:

1. UTILIZE EXISTING SPARE 1,600A CIRCUIT BREAKER IN EXISTING 480/277V SWITCHGEAR TO POWER NEW FIRE ALARM SYSTEM. COORDINATION OF THE WORK ASSOCIATED WITH THE NEW FEEDER INSTALLATION CAN BE COMPLETED WHILE THE SWITCHGEAR IS ENERGIZED. PROGRAM ENGINEER SUPPLIED CIRCUIT BREAKER SETTINGS INTO TRIP UNIT. SET TRIP TO 1,200A. PROVIDE AN ENGRAVED LABEL AT BREAKER TO STATE "FIRE PUMP DISCONNECTING MEANS".
2. INSTALL AND WIRE NEW 480/277V FIRE PUMP LISTED 3-POLE AUTOMATIC TRANSFER SWITCH AND CONTROLLER, 18K AIC RATING. PROVIDE SKID MOUNTED OR ON A HOUSEKEEPING PAD.
3. FURNISH, INSTALL AND WIRE NEW OUTDOOR CUMMINS GFBC 350KW (@ SEA LEVEL; DE-RATED TO 238 KW AT ELEVATION) NATURAL GAS GENERATOR WITH 105C ALTERNATOR, AND REMOTE ANNUNCIATOR (LOCATED IN FP/BOILER ROOM).
4. ROUTE POWER FOR TUNNEL FIRE PROTECTION SYSTEM PANELS WITH CONDUITS SHOWN ON THE SYSTEMS GROUP DRAWINGS.
5. PROVIDE SINGLE PHASE STEP DOWN TRANSFORMER WITH PRIMARY(0.8A) AND SECONDARY(4A) OVER-CURRENT PROTECTION AND DISCONNECTING MEANS. INSTALL TRANSFORMER WITHIN THE FPC/RCP PANEL IN LOCATION SHOWN IN THE SYSTEMS GROUP DRAWINGS. COORDINATE INSTALLATION WITH SYSTEMS GROUP.
6. REFER TO EQUIPMENT SCHEDULE - SHEET E1.2 FOR FEEDER SIZES TO PUMPS.
7. FEEDER AND BUSSED GUTTER ARE SIZED FOR FIRE PUMP AND CIRCULATION PUMPS NOT RUNNING SIMULTANEOUSLY.

BARNARD EJMT TEAM

EISENHOWER/JOHNSON MEMORIAL TUNNEL
FIXED FIRE SUPPRESSION SYSTEM
DESIGN BUILD PROJECT
Project No. C0703-360 Subaccount 17810
RFC DOCUMENTS - 2015-04-29

Revisions: Num | Description | Date | DRAWN BY: | CHECKED BY:

WEST ELECTRICAL ONE-LINE DIAGRAM

Drawing Number
E2.1

IF THIS SHEET IS NOT 22"x34" IT IS NOT PLOTTED TO SCALE

East Side Electrical

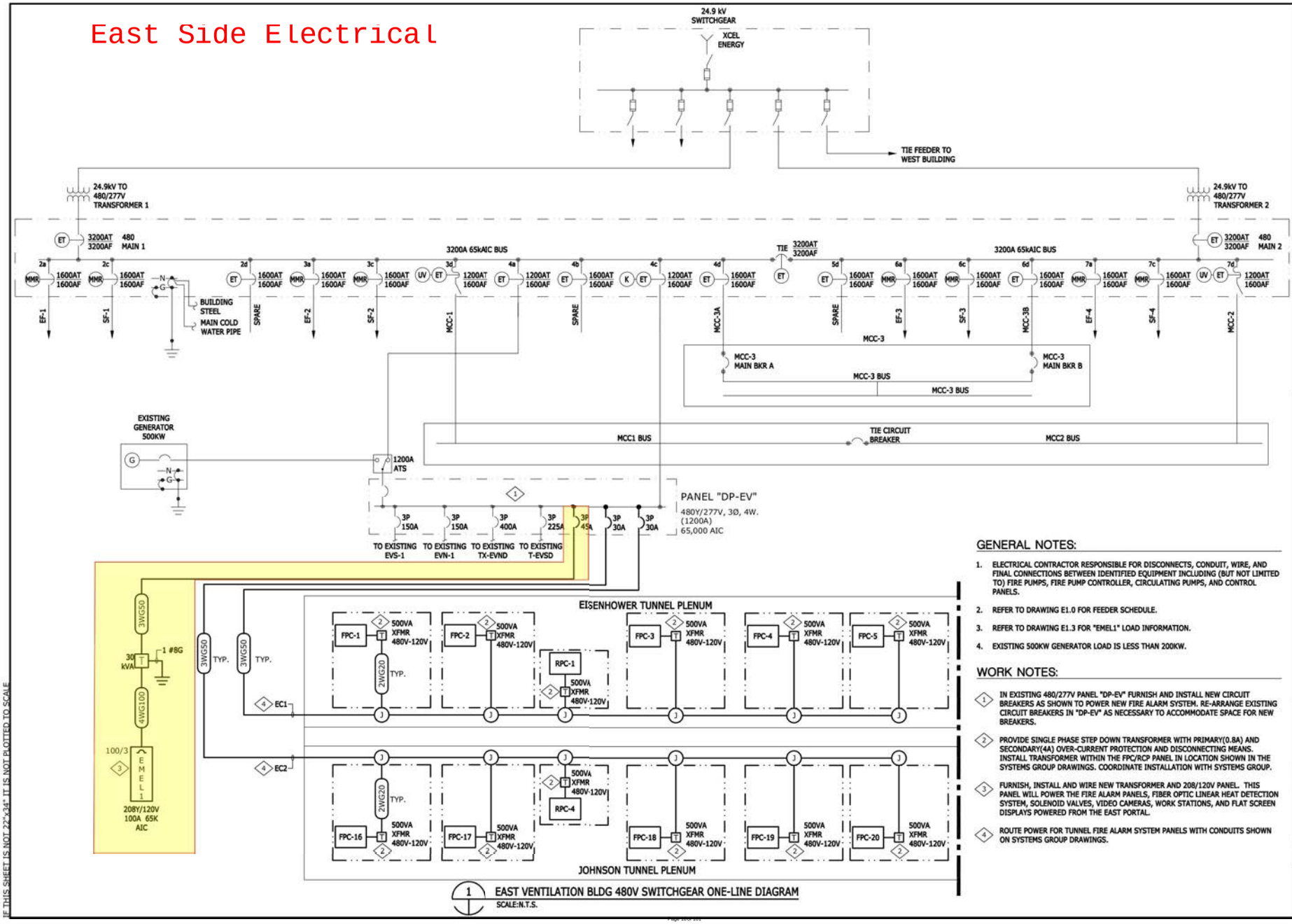

GENERAL NOTES:

1. ELECTRICAL CONTRACTOR RESPONSIBLE FOR DISCONNECTS, CONDUIT, WIRE, AND FINAL CONNECTIONS BETWEEN IDENTIFIED EQUIPMENT INCLUDING (BUT NOT LIMITED TO) FIRE PUMPS, FIRE PUMP CONTROLLER, CIRCULATING PUMPS, AND CONTROL PANELS.
2. REFER TO DRAWING E1.0 FOR FEEDER SCHEDULE.
3. REFER TO DRAWING E1.3 FOR "EMEL1" LOAD INFORMATION.
4. EXISTING 500KW GENERATOR LOAD IS LESS THAN 200KW.

WORK NOTES:

1. IN EXISTING 480/277V PANEL "DP-EV" FURNISH AND INSTALL NEW CIRCUIT BREAKERS AS SHOWN TO POWER NEW FIRE ALARM SYSTEM. RE-ARRANGE EXISTING CIRCUIT BREAKERS IN "DP-EV" AS NECESSARY TO ACCOMMODATE SPACE FOR NEW BREAKERS.
2. PROVIDE SINGLE PHASE STEP DOWN TRANSFORMER WITH PRIMARY(0.8A) AND SECONDARY(4A) OVER-CURRENT PROTECTION AND DISCONNECTING MEANS. INSTALL TRANSFORMER WITHIN THE FPC/RCP PANEL IN LOCATION SHOWN IN THE SYSTEMS GROUP DRAWINGS. COORDINATE INSTALLATION WITH SYSTEMS GROUP.
3. FURNISH, INSTALL AND WIRE NEW TRANSFORMER AND 208/120V PANEL. THIS PANEL WILL POWER THE FIRE ALARM PANELS, FIBER OPTIC LINEAR HEAT DETECTION SYSTEM, SOLENOID VALVES, VIDEO CAMERAS, WORK STATIONS, AND FLAT SCREEN DISPLAYS POWERED FROM THE EAST PORTAL.
4. ROUTE POWER FOR TUNNEL FIRE ALARM SYSTEM PANELS WITH CONDUITS SHOWN ON SYSTEMS GROUP DRAWINGS.

BARNARD EJMT TEAM

BARNARD · RONDINELLI · ALF CONSULTING ENGINEERS · Western States Fire Protection Co. · BCER Engineering · Sturgeon Electric

EISENHOWER/JOHNSON MEMORIAL TUNNEL
FIXED FIRE SUPPRESSION SYSTEM
DESIGN BUILD PROJECT
Project No. C0703-360 Subaccount 17810
RFC DOCUMENTS - 2015-04-29

Revisions: Num | Description | Date | DRAWN BY: | CHECKED BY:

EAST ELECTRICAL ONE-LINE DIAGRAM

Drawing Number
E2.2

IF THIS SHEET IS NOT 22"x34" IT IS NOT PLOTTED TO SCALE

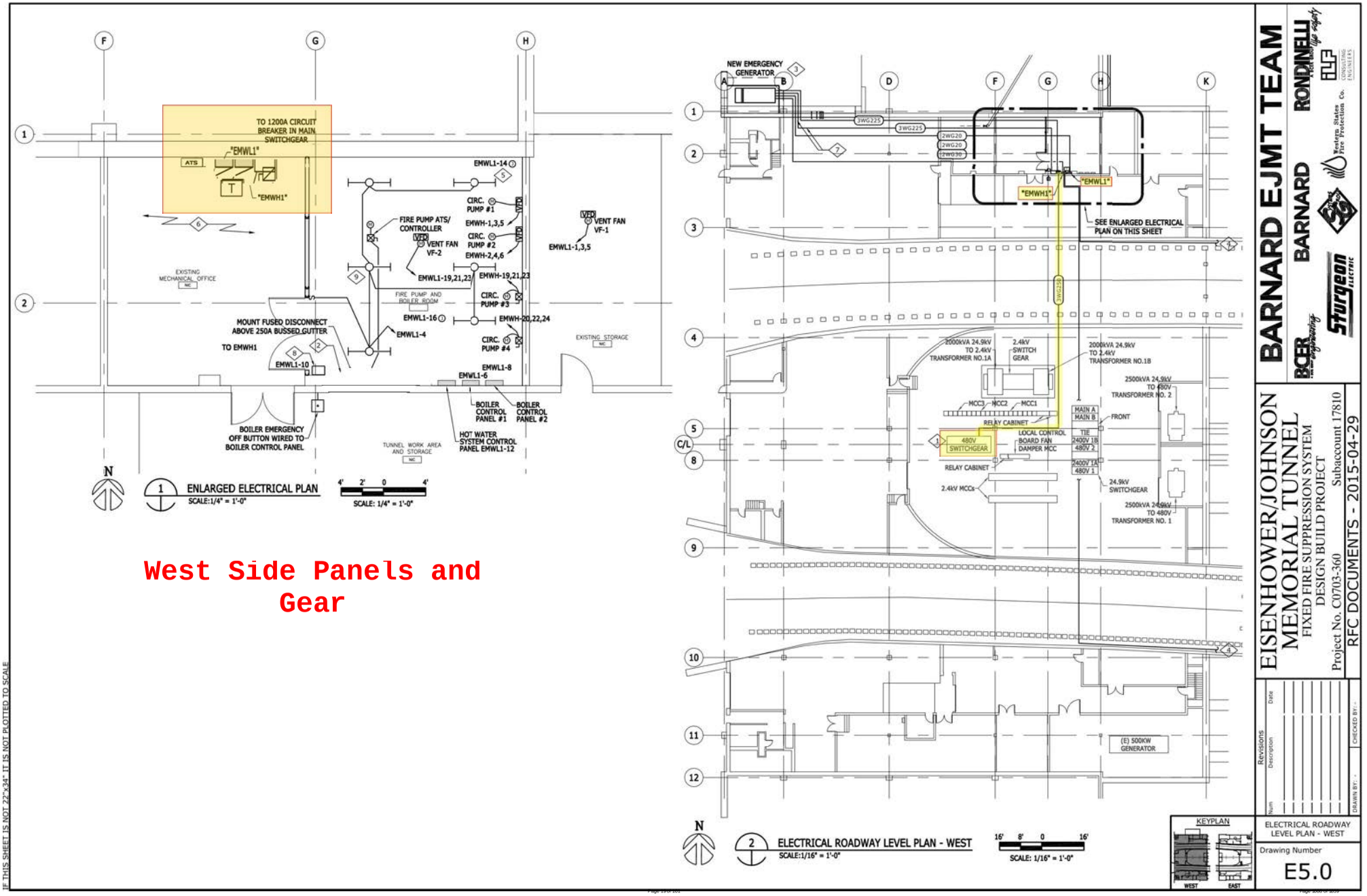

West Side Panels and Gear

BARNARD EJMT TEAM

BARNARD · RONDINELLI · ALF · Tenera States Fire Protection Co. · Sturgeon Electric · BCER Engineering

EISENHOWER/JOHNSON MEMORIAL TUNNEL
FIXED FIRE SUPPRESSION SYSTEM
DESIGN BUILD PROJECT
Project No. C0703-360 Subaccount 17810
RFC DOCUMENTS - 2015-04-29

Revisions
Num | Description | Date

DRAWN BY: | CHECKED BY:

ELECTRICAL ROADWAY LEVEL PLAN - WEST

Drawing Number
E5.0

IF THIS SHEET IS NOT 22"x34" IT IS NOT PLOTTED TO SCALE

East Side Panels

Sturgeon ELECTRIC
12150 E 112TH AVE, HENDERSON, CO 80640

MYR GROUP

Circuit Description

PREPARED BY: **Jason Willis**
CELL PHONE: **(303) 944-1190**
FAX: **(303) 227-6978**
OFFICE: **303-286-8000**
EMAIL: **JWillis@myrgroup.com**

UNOFFICIAL-DO NOT USE AS OFFICIAL
PANEL SCHEDULE

(N) PNL EMWH1

FEED FROM: ATS-EMWH1
VOLTAGE: 480/277
PHASE: 3
WIRE: 4

PANEL:
NEUTRAL: 100%
GROUND: STANDARD
ENCLOSURE: NEMA 1
MOUNTING: SURFACE

MANUFACTURER: SEE SPECIFICATIONS
BUS AMPACITY: 225
MAIN: 225A MLO
AIC: 18,000

CKT NO	CKT DESCRIPTION	LOAD VA	LOAD TYPE	CKT BREAKER P	CKT BREAKER A	CKT BREAKER NOTE	CKT BREAKER NOTE	CKT BREAKER A	CKT BREAKER P	LOAD TYPE	LOAD VA	CKT DESCRIPTION	CKT NO
1	SPARE	14400	M	3	100			100	3	N	14400	BOILER SKID	2
3	/	14400	M	/	/			/	/	N	14400	/	4
5	/	14400	M	/	/			/	/	N	14400	/	6
7	XFMR T-EMWL1			3	45			-	-			SPACE	8
9	/			/	/			-	-			/	10
11	/			/	/			-	-			/	12
13	EISENHOWER TUNNEL	1000	O	3	30			30	3	O	1000	JOHNSON TUNNEL	14
15	FIRE PROTECTION SYSTEM	1000	O	/	/			/	/	O	1000	FIRE PROTECTION SYSTEM	16
17	/	1000	O	/	/			/	/	O	1000	/	18
19	SPARE	1333	M	3	15			15	3	N	1333	SPARE	20
21	/	1333	M	/	/			/	/	N	1333	/	22
23	/	1333	M	/	/			/	/	N	1333	/	24
25	SPD			3	30			-	-			SPACE	26
27	/			/	/			-	-			/	28
29	/			/	/			-	-			/	30

SUBFED LOAD SUMMARY

LOAD	PHASE	L	R	H	M	kVA IMLRG	kVA CM	K	S	N	E
PANEL 'EMWL1'	A	-	-	-	1.5	0.9	-	-	-	-	6.5
	B	0.4	-	-	1.5	0.9	-	-	-	-	3.4
	C	-	-	-	1.5	0.9	-	-	-	-	6.6

LOAD TYPE	CONNECTED (KVA) A	B	C	TOTAL	DEMAND FACTOR	DEMAND (KVA) A	B	C	TOTAL
LIGHTING (L)	0.0	0.4	0.0	0.4	1.25	0.0	0.5	0.0	0.5
RECEPTACLE (R)	0.0	0.0	0.0	0.0	1.00	0.0	0.0	0.0	0.0
REC (>10000VA) (R)	0.0	0.0	0.0	0.0	0.50	0.0	0.0	0.0	0.0
HEATER (H)	0.0	0.0	0.0	0.0	1.00	0.0	0.0	0.0	0.0
LARGEST MOTOR (M)	14.4	14.4	14.4	43.2	1.25	18.0	18.0	18.0	54.0
REMAIN MOTOR (M)	2.8	2.8	2.8	8.5	1.00	2.8	2.8	2.8	8.5
CONTINUOUS LOAD (CL)	0.0	0.0	0.0	0.0	1.25	0.0	0.0	0.0	0.0
KITCHEN LOADS (K)	0.0	0.0	0.0	0.0	1.00	0.0	0.0	0.0	0.0
SPECIFIC LOADS (S)	0.0	0.0	0.0	0.0	1.00	0.0	0.0	0.0	0.0
NONCONCIDENTAL (N)	15.7	15.7	15.7	47.2	0.00	0.0	0.0	0.0	0.0
OTHER LOAD (O)	8.5	5.4	8.6	22.5	1.00	8.5	5.4	8.6	22.5
TOTAL DEMAND (KVA)						29.3	26.7	29.4	85.5
SPARE (KVA)						33.0	35.6	32.9	101.6
TOTAL (A/PH)						**105.9**	**96.4**	**106.3**	**102.8**
SPARE (A/PH)						119.1	128.6	118.7	122.2

NOTES:
1. PROVIDE PANEL WITH INTERNALLY MOUNTED TYPE-2, 20kA SURGE PROTECTION DEVICE.
2. HEATING AND BOILER CIRC PUMPS DO NOT RUN SIMULTANEOUSLY.

IF THIS SHEET IS NOT 22"x34", IT IS NOT PLOTTED TO SCALE

UNOFFICIAL-DO NOT USE AS OFFICIAL
PANEL SCHEDULE

(N) PNL EMWL1

FEED FROM: 30KVA XFMR
VOLTAGE: 208/120
PHASE: 3
WIRE: 4

PANEL:
NEUTRAL: 100%
GROUND: STANDARD
ENCLOSURE: NEMA 1
MOUNTING: SURFACE

MANUFACTURER: SEE SPECIFICATIONS
BUS AMPACITY: 100
MAIN: 100A MCB
AIC: 10,000

CKT NO	CKT DESCRIPTION	LOAD VA	LOAD TYPE	CKT BREAKER P	CKT BREAKER A	CKT BREAKER NOTE	CKT BREAKER NOTE	CKT BREAKER A	CKT BREAKER P	LOAD TYPE	LOAD VA	CKT DESCRIPTION	CKT NO
1	VF-1	933	M	3	15			20	1			TANK LEVEL SENSOR	2
3	/	933	M	/	/			20	1	L	384	LTG - BOILER ROOM	4
5	/	933	M	/	/			20	1	O	1200	SPARE	6
7	CCTV WORKSTATION UPS	1800	O	1	20			20	1	O	1200	SPARE	8
9	FA FIREWORKS UPS	1800	O	1	20			20	1	O	200	GEN. ANN. PANEL	10
11	FACP - EST3	1800	O	1	20			20	1	O	900	SPARE	12
13	CCTV RACKS	1800	O	1	20			20	1	O	200	FLOW METER	14
15	GEN. BATTERY CHARGER	1200	O	1	20			20	1	O	200	BOILER CONTROL VALVES	16
17	GEN. WARMING PAD	1200	O	1	20			30	2	O	1500	GEN. JACKET HEATER	18
19	VF-2	567	M	3	15			/	/	O	1500	/	20
21	/	567	M	/	/			20	1			SPARE	22
23	/	567	M	/	/			20	1			SPARE	24
25	SPD			3	30			-	-			SPACE	26
27	/			/	/			-	-			SPACE	28
29	/			/	/			-	-			SPACE	30

LOAD TYPE	CONNECTED (KVA) A	B	C	TOTAL	DEMAND FACTOR	DEMAND (KVA) A	B	C	TOTAL
LIGHTING (L)	0.0	0.4	0.0	0.4	1.25	0.0	0.5	0.0	0.5
RECEPTACLE (R)	0.0	0.0	0.0	0.0	1.00	0.0	0.0	0.0	0.0
REC (>10000VA) (R)	0.0	0.0	0.0	0.0	0.50	0.0	0.0	0.0	0.0
HEATER (H)	0.0	0.0	0.0	0.0	1.00	0.0	0.0	0.0	0.0
LARGEST MOTOR (M)	0.9	0.9	0.9	2.8	1.25	1.2	1.2	1.2	3.5
REMAIN MOTOR (M)	0.6	0.6	0.6	1.7	1.00	0.6	0.6	0.6	1.7
CONTINUOUS LOAD (CL)	0.0	0.0	0.0	0.0	1.25	0.0	0.0	0.0	0.0
KITCHEN LOADS (K)	0.0	0.0	0.0	0.0	1.00	0.0	0.0	0.0	0.0
SPECIFIC LOADS (S)	0.0	0.0	0.0	0.0	1.00	0.0	0.0	0.0	0.0
NONCOINCIDENTAL (N)	0.0	0.0	0.0	0.0	0.00	0.0	0.0	0.0	0.0
OTHER LOAD (O)	6.5	3.4	6.6	16.5	1.00	6.5	3.4	6.6	16.5
TOTAL DEMAND (KVA)						8.2	5.6	8.3	22.2
SPARE (KVA)						1.8	4.4	1.7	7.8
TOTAL (A/PH)						**68.6**	**46.8**	**69.4**	**61.6**
SPARE (A/PH)						14.7	36.5	13.8	21.7

NOTES:
1. PROVIDE PANEL WITH INTERNALLY MOUNTED TYPE-2, 20kA SURGE PROTECTION DEVICE.

IF THIS SHEET IS NOT 22"x34", IT IS NOT PLOTTED TO SCALE

XREFS=(xx-nb) \\tserver\jobs\B791400Z\Dwg\elmt - fixed fire suppression system\Sheets\Electrical\E1.0 ELECTRICAL GENERAL INFORMATION.dwg FEB 3, 2015 10:32AM CHENDERSON

UNOFFICIAL-DO NOT USE AS OFFICIAL
PANEL SCHEDULE

(N) PNL EMEL1

FEED FROM: 30KVA XFMR
VOLTAGE: 208/120
PHASE: 3
WIRE: 4

PANEL:
NEUTRAL: 100%
GROUND: STANDARD
ENCLOSURE: NEMA 1
MOUNTING: SURFACE

MANUFACTURER: SEE SPECIFICATIONS
BUS AMPACITY: 100
MAIN: 100A MCB
AIC: 65,000

CKT NO	DESCRIPTION	LOAD VA	LOAD TYPE	CKT BREAKER P	CKT BREAKER A	CKT BREAKER NOTE	CKT BREAKER NOTE	CKT BREAKER A	CKT BREAKER P	LOAD TYPE	LOAD VA	CKT DESCRIPTION	CKT NO
1	MAIN BREAKER		O	1	20			20	1	O	1800	SPARE	2
3			O	1	20			20	1	O	200	FA WORKSTATION UPS	4
5			O	1	20			20	1	O	1800	SPARE	6
7	FACP - EST3	1800	O	1	20			20	1	O	1800	FACP - EST3	8
9	CCTV RACKS	1800		1	20			20	1			SPARE	10
11	CCTV WORKSTATION UPS	1800		1	20			20	1			SPARE	12
13	FA WORKSTATION UPS	1800		-	-			20	1			CONTROL VALVES - LL EA	14
15	SPACE			-	-			20	1			SPARE	16
17	SPACE			-	-			20	1			SPARE	18
19	SPACE			-	-			-	-			SPACE	20
21	SPACE			-	-			-	-			SPACE	22
23	SPACE			-	-			-	-			SPACE	24
25	SPD			3	30			-	-			SPACE	26
27	/				/			-	-			SPACE	28
29	/				/			-	-			SPACE	30

LOAD TYPE	CONNECTED (KVA) A	B	C	TOTAL	DEMAND FACTOR	DEMAND (KVA) A	B	C	TOTAL
LIGHTING (L)	0.0	0.0	0.0	0.0	1.25	0.0	0.0	0.0	0.0
RECEPTACLE (R)	0.0	0.0	0.0	0.0	1.00	0.0	0.0	0.0	0.0
REC (>10000VA) (R)	0.0	0.0	0.0	0.0	0.50	0.0	0.0	0.0	0.0
HEATER (H)	0.0	0.0	0.0	0.0	1.00	0.0	0.0	0.0	0.0
LARGEST MOTOR (M)	0.0	0.0	0.0	0.0	1.25	0.0	0.0	0.0	0.0
REMAIN MOTOR (M)	0.0	0.0	0.0	0.0	1.00	0.0	0.0	0.0	0.0
CONTINUOUS LOAD (CL)	0.0	0.0	0.0	0.0	1.25	0.0	0.0	0.0	0.0
KITCHEN LOADS (K)	0.0	0.0	0.0	0.0	1.00	0.0	0.0	0.0	0.0
SPECIFIC LOADS (S)	0.0	0.0	0.0	0.0	1.00	0.0	0.0	0.0	0.0
NONCOINCIDENTAL (N)	0.0	0.0	0.0	0.0	0.00	0.0	0.0	0.0	0.0
OTHER LOAD (O)	7.2	2.0	3.6	12.8	1.00	7.2	2.0	3.6	12.8
TOTAL DEMAND (KVA)						7.2	2.0	3.6	12.8
SPARE (KVA)						2.8	8.0	6.4	17.2
TOTAL (A/PH)						**60.0**	**16.7**	**30.0**	**35.5**
SPARE (A/PH)						23.3	66.6	53.3	47.7

NOTES:
1. PROVIDE PANEL WITH INTERNALLY MOUNTED TYPE-2, 20kA SURGE PROTECTION DEVICE.

BARNARD EJMT TEAM

BCER engineering | BARNARD | Sturgeon Electric | RONDINELLI

EISENHOWER/JOHNSON MEMORIAL TUNNEL
FIXED FIRE SUPPRESSION SYSTEM
DESIGN BUILD PROJECT

Project No. C0703-360 Subaccount 17810

RFC DOCUMENTS - 2015-04-29

Revisions		
Num	Description	Date

DRAWN BY: | CHECKED BY:

ELECTRICAL SCHEDULES

Drawing Number E1.3

IF THIS SHEET IS NOT 22"x34", IT IS NOT PLOTTED TO SCALE

UNOFFICIAL-DO NOT USE AS OFFICIAL
PANEL SCHEDULE

PANEL: (E) PNL DP-EV

FEED FROM: ATS-1200A
VOLTAGE: 480/277
PHASE: 3
WIRE: 4

NEUTRAL: 100%
GROUND: STANDARD
ENCLOSURE: NEMA 1
MOUNTING: SURFACE

MANUFACTURER: —
BUS AMPACITY: 1200
MAIN: 1200A MLO
AIC: 65,000

CKT NO	CKT DESCRIPTION	LOAD VA	LOAD TYPE	CKT BREAKER P	CKT BREAKER A	CKT BREAKER NOTE	CKT BREAKER A	CKT BREAKER P	LOAD TYPE	LOAD VA	CKT DESCRIPTION	CKT NO
1	XFMR 'E-MELT' (N)	1000	O	3	45		100	3	O	1000	INVERTER	2
3		1000	O	/	/		/	/	O	1000		4
5	/	1000	O	/	/		/	/	O	1000		6
7	/			3	400		1	-	-		SPACE (E)	8
9	DX-EVND (300KVA) (E)			/	/			-	-		/	10
11	/			/	/			-	-		/	12
13	EVS-1 (E)	16667	O	3	150	1	1	150	3	O	16667	EVA-1 (E)	14
15	/	16667	O	/	/			/	/	O	16667	/	16
17	/	16667	O	/	/			/	/	O	16667	/	18
19	JOHNSON TUNNEL FIRE PROTECTION	16667	O	3	30	1	1	30	3	O	16667	EISENHOWER TUNNEL FIRE PROTECTION	20
21		16667	O	/	/			/	/	O	16667		22
23		16667	O	/	/			/	/	O	16667		24

SUBFED LOAD SUMMARY

LOAD	PHASE	KVA L	R	H	M	MLRG	CM	K	S	N	E
PANEL 'E-MELT'	A	-	-	-	-	-	-	-	-	-	7.2
	B	-	-	-	-	-	-	-	-	-	2.0
	C	-	-	-	-	-	-	-	-	-	3.6

LOAD TYPE	CONNECTED (KVA) A	B	C	TOTAL	DEMAND FACTOR	DEMAND (KVA) A	B	C	TOTAL
LIGHTING (L)	0.0	0.0	0.0	0.0	1.25	0.0	0.0	0.0	0.0
RECEPTACLE (R)	0.0	0.0	0.0	0.0	1.00	0.0	0.0	0.0	0.0
REC (>10000VA) (R)	0.0	0.0	0.0	0.0	0.50	0.0	0.0	0.0	0.0
HEATER (H)	0.0	0.0	0.0	0.0	1.00	0.0	0.0	0.0	0.0
LARGEST MOTOR (M)	0.0	0.0	0.0	0.0	1.25	0.0	0.0	0.0	0.0
REMAIN MOTOR (M)	0.0	0.0	0.0	0.0	1.00	0.0	0.0	0.0	0.0
CONTINUOUS LOAD (CL)	0.0	0.0	0.0	0.0	1.25	0.0	0.0	0.0	0.0
KITCHEN LOADS (K)	0.0	0.0	0.0	0.0	1.00	0.0	0.0	0.0	0.0
SPECIFIC LOADS (S)	0.0	0.0	0.0	0.0	1.00	0.0	0.0	0.0	0.0
NONCOINCIDENTAL (N)	0.0	0.0	0.0	0.0	0.00	0.0	0.0	0.0	0.0
OTHER LOAD (O)	75.9	70.7	72.3	218.8	1.00	75.9	70.7	72.3	218.8
TOTAL DEMAND (KVA)						75.9	70.7	72.3	218.8
SPARE (KVA)						256.5	261.7	260.1	778.8
TOTAL (A/PH)						**273.9**	**255.1**	**260.9**	**263.2**
SPARE (A/PH)						926.1	944.9	939.1	936.8

NOTES:
1. LOADS ON EXISTING 500kW GENERATOR IS 200kW.
NEW LOAD ADDED = 18.8kW
TOTAL LOAD = 218.8kW
SPARE = 281.2kW

IF THIS SHEET IS NOT 22"x34" IT IS NOT PLOTTED TO SCALE

Sturgeon Electric Company, Inc.
12150 East 112th Avenue
Henderson, CO 80640
303-286-8000

Powering Business Worldwide

Panel board Training Agenda

1 ½ Hours

I. Intro/Overview of O&M Manuals- 5 Min
II. Breaker Assembly- 15 Min
   a. Basic Construction ŒMolded Case vs. Power Breakers
   b. Breaker Ratings
   c. Trip functions / Secondary wiring
III. Removal Procedures- 15 Min
   a. Fixed mount
IV. Operation, Adjustment & Testing- 15 Min
   a. Switching operations
   b. Adjustments
      i. Clearances & Procedures
V. Troubleshooting Problems
   a. Common mistakes
   b. Quick Fixes
VI. Maintenance & Lubrication Procedures- 15 Min
   a. De-Energization
      i. Lock-out / Tag-out
   b. Maintenance ŒCleaning
   c. Maintenance ŒLubrication
   d. Approved Chemicals & Lubricants
   e. Torque Specs
VII. Renewal Parts- 15 Min
   a. Common Replacement Parts

Sturgeon Electric Company, Inc.
12150 East 112th Avenue
Henderson, CO 80640
303-286-8000

b. Ordering Renewal Parts

VIII. Warranty and Service Protocol- 15 Min

a. Service
   i. Who to Call
   ii. What Information is Required
b. Warranty Terms
   i. What is Covered
   ii. Who to Call
   iii. What Information is Required

Transformer Training Agenda 1 Hr

I. GENERAL SYSTEM OVERVIEW- 20 Min

a. The technical review of the operating parameters is conducted in a classroom. The materials required involve:
   i. An area large enough to handle the students.
   ii. A copy of the final as-built drawings
   iii. A table to layout drawings, literature, and booklets.
b. On site review of the actual equipment
   i. On site review is conducted in the substation utilizing the actual equipment
   ii. The instructor will cover the following topics:
      1. The physical layout of the transformer
      2. Locate the protective devices and describe their purpose.

II. MECHANICAL- 20 Min

a. Technical review of the operating requirements
   i. The technical review of the operating parameters is conducted in a classroom.
   ii. The instructor will cover the following topics:

1. The mechanical construction of the transformer.
2. Safety Concerns
3. Primary and secondary winding construction
4. Tap Selection
5. Primary Cable and Secondary Bus Connections

III. ELECTRICAL- 20 Min

a. Technical review of the operating requirements

b. The instructor will cover the following topics:

i.De-energizing

ii.Tap Selection

iii.Expected voltage levels

Liability Disclaimer

ŁThe attached training program presents general principals regarding maintenance and repair of electrical distribution equipment. It cannot cover all possible situations or problems, which might arise. Individuals should contact an Eaton - Electrical Service and Systems representative, or other qualified individual, if questions arise. Only qualified electricians who are familiar with the installation and maintenance of electrical distribution equipment should perform work associated with such products.

ŁAll recommendations of the manufacturer, warnings and cautions relating to the safety of personnel and equipment should be followed. All applicable health and safety laws, codes, standards and procedures should be strictly adhered to. Eaton Corporation will not be responsible for the misuse or misapplication of the information contained in this program.

PLEASE SEE EATON O AND M MANUALS FOR DETAILS TO BE COVERED BY EATON TRAINING

Sturgeon ELECTRIC
12150 E 112TH AVE, HENDERSON, CO 80640

MYR GROUP

FOLHD HANGER

PREPARED BY: **Jason Willis**
CELL PHONE: **(303) 944-1190**
FAX: **(303) 227-6978**
OFFICE: **303-286-8000**
EMAIL: **JWillis@myrgroup.com**

** Respect * Integrity * Responsiveness **
** Creativity * Initiative * Team Work * Safety **

SECo No.: 841323

Sturgeon Electric Company, Inc.
12150 East 112th Avenue
Henderson, CO 80640
303-286-8000

FIBER OPTIC LINEAR HEAT DETECTION (FOLHD) SYSTEM

The FOLHD system was installed in a redundant fashion with one (1) linear heat detector located in the East Control Room and one (1) Linear Heat Detector located in the west control room. Each linear heat detector feeds both tunnels to ensure that full coverage will be maintained throughout the system even if there is a break in one of the fiber runs.

The FOLHD includes a single 2/c armored fiber optic cable in each tunnel. This armored cable includes a single 1/c fiber cable fed from each linear heat detector. This armored fiber optic cable has been installed along the approximate centerline of the tunnel.

The fiber optic cable is installed in a four (4) foot aluminum hanger support system that has been attached to the existing ceiling tiles of the roadway. This allows the fiber optic cable to rest approximately 2in below the existing roadway ceiling to meet the NFPA 72 code required mounting distance from the ceiling. The hanger is secured to the ceiling tile by six ¼-14 x 1-14fl ITW Scots Tek screws. Additionally, this hanger system has been notched along the bottom of the channel to allow heat transmission to the fiber cable and to allow drainage of the tunnel washing system water.

The FOLHD system is powered by a UL Listed fire alarm power supply connected to the emergency power electrical system, accompanied with battery back-up, and located in the CCTV equipment racks installed at the east and west control rooms.

This portion of the FOLHD system has been installed in a fashion that should not require any maintenance or operation training. If a FOLHD hanger does need to be replaced, however, this will require a spare channel and six new Tek screws which can be easily secured to the ceiling of the tunnel once traffic is diverted and access to the ceiling is provided via man lift.

Sturgeon recommends routine visual inspection of the hanger system in both tunnels by having a crew member walk the length of the tunnel platform, making note of any hangers that appear to be lose or out of place.

Sturgeon Electric Company, Inc.
12150 East 112th Avenue
Henderson, CO 80640
303-286-8000

FIBER OPTIC LINEAR HEAT DETECTION (FOLHD) SYSTEM

Areas of Concern:

The installation of the FOLHD hanger system is simple and straightforward. There is little weight being placed on the hanger by the FOLHD cable. The one area of concern may be that vibration from the large amount of traffic could cause the screws to loosen over time. This risk has been addressed by the use of six screws per hanger. Any additional risk can be eliminated by yearly visual inspections of the hanger from the tunnel walkways.

Preventative Maintenance: Once Per Year

There is no required maintenance for the FOLHD hanger system. However, Sturgeon recommends routine visual inspection of the hanger system in both tunnels by having a crew member walk the length of the tunnel platform, making note of any hangers that appear to be loose or out of place.

Any hanger that is seen as out of place should be inspected and re-secured immediately.

Sturgeon
MYR
USDOT 029762

FOLHD Hanger (Provided by Systems Group. Installed by Sturgeon)

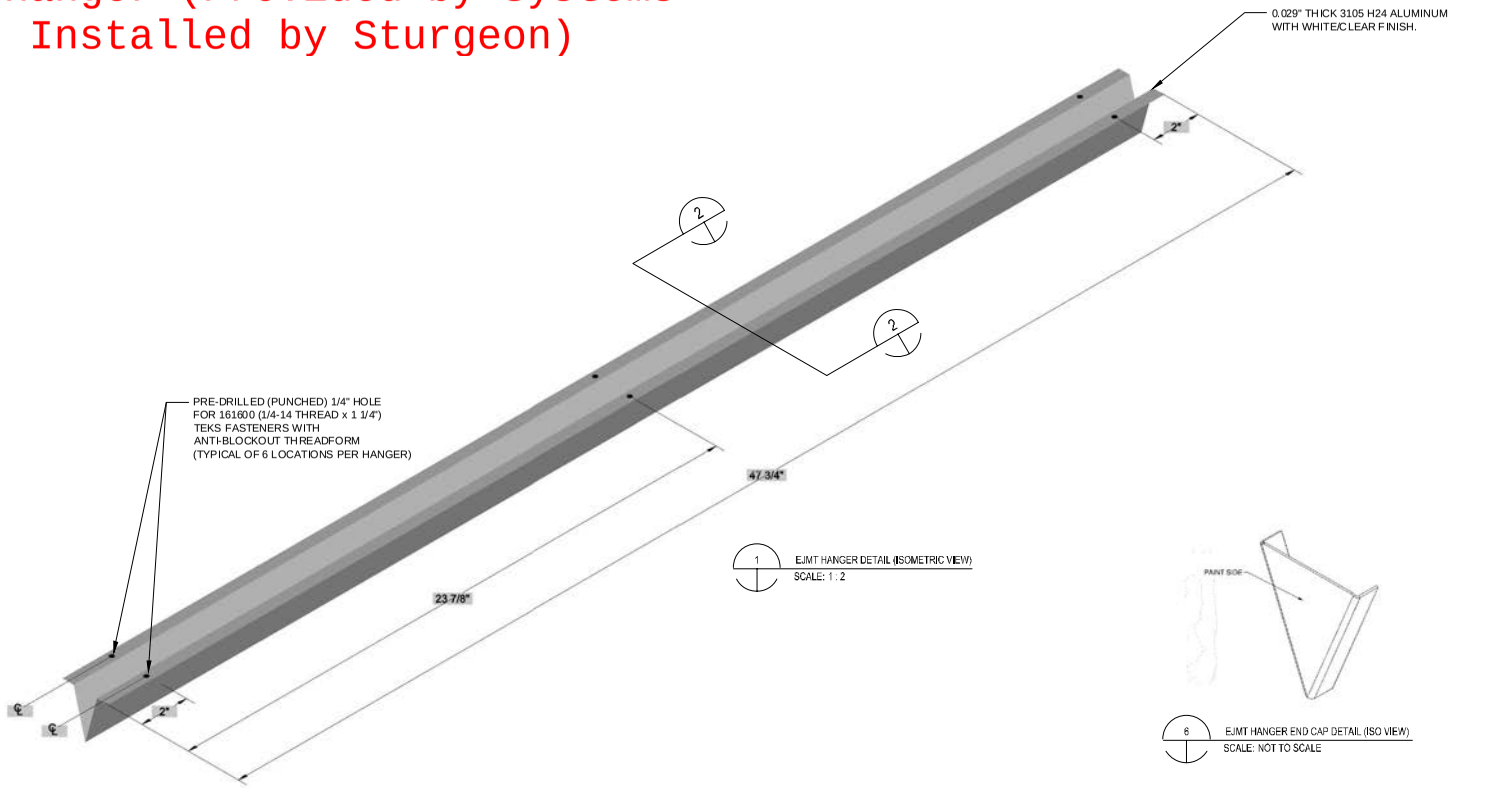

1 EJMT HANGER DETAIL (ISOMETRIC VIEW)
SCALE: 1 : 2

6 EJMT HANGER END CAP DETAIL (ISO VIEW)
SCALE: NOT TO SCALE

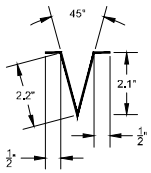

2 EJMT HANGER DETAIL (FRONT VIEW)
SCALE: 1 : 2

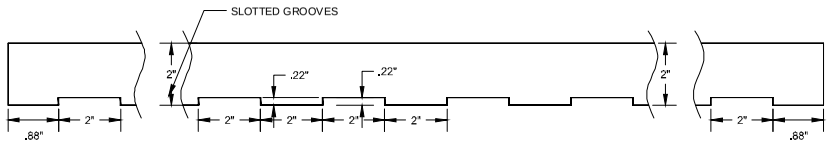

3 EJMT HANGER DETAIL (SIDE VIEW)
SCALE: 1 : 2

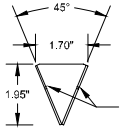

TEKS FASTENERS WITH ANTI-BLOCKOUT THREADFORM (TYPICAL OF 2 LOCATIONS PER CAP)

4 EJMT HANGER END CAP DETAIL (FRONT VIEW)
SCALE: 1 : 2

5 EJMT HANGER END CAP DETAIL (TOP VIEW)
SCALE: 1 : 2

IF THIS SHEET IS NOT 22"x34" IT IS NOT PLOTTED TO SCALE

BARNARD EJMT TEAM

RONDINELLI · BARNARD · Eastern States Fire Protection Co. · ELP Consulting Engineers · BCER Engineering · Sturgeon Electric

EISENHOWER/JOHNSON MEMORIAL TUNNEL
FIXED FIRE SUPPRESSION SYSTEM
DESIGN BUILD PROJECT
Project No. C0703-360 Subaccount 17810
RFC DOCUMENTS - 2015-04-29

Revisions				
Num	Description	Date		
			DRAWN BY: B.T.L.	CHECKED BY: AEE Jr

FIRE ALARM:
DETAILS - LINEAR HEAT HANGER

FOLHD Hanger Screw

ITW Buildex

SCOTS®

Long Life Teks® Fasteners

The Original Buildex Scots 300 Stainless Steel Encapsulated Head will never rust .... EVER!!!

1/4-14 x 7/8 Teks 1 Now Available with ABOT™ (Anti-Backout Threadform)

Applications

- Panel over blanket insulation to steel frame.
- Roof curb to structural steel.
- Standing seam roof system endlaps.
- Stitch roof and wall sidelaps.
- #17 diameter replacement screw for #12 and 1/4 diameter fasteners.

Product Features

- For improved appearance and extra life an integral design controls the EPDM rubber washer.
- Combines 300 series stainless steel exterior with the strength of carbon steel.
- 300 series stainless most preferred for galvalume long life panels.
- Maximum sealing and corrosion protection.
- Point has precise cutting edges to improve drill performance with less effort.
- Non-walking point provides fast material engagement.
- Point to thread design maximizes pullout performance and minimizes backout.
- Drills and taps in the broadest range of applications.

Product Specifications

Diameter.....#12, 1/4 and #17
Thread Form.....12-14
12-24
1/4-14
17-14
Head Style.....5/16" HWH (300 Series Stainless)
Washer Style.....9/16" O.D. Integral
Drill Point.....Teks 1
Teks 2
Teks 3
Teks 5
Type AB
Finish.....Climaseal®
Available with P³ powder paint

Head Style

Scots Head

Copper State Bolt & Nut Co.
13365 James E. Casey Ave.
Englewood, CO 80112
(303) 799-1804 Fax (303) 799-6154

LONG LIFE METAL ROOF AND WALL APPLICATIONS

PRODUCT REPORT NO. 02708

Selector Guide

Part Number	Description	Head Style	Drill Point	Drill & Tap Capacity	Max. Material Attachment	Box Qty	Applications
1165253	12-14 x 1"	HWH	#3	.036-.210	.310	2,500	• Panel over blanket insulation to steel frame. • Roof curb to structural steel.
1167253	12-14 x 1-1/4"	HWH	#2	.036-.210	.560	2,500	
1168253	12-14 x 1-1/2"	HWH	#2	.036-.210	.790	2,000	
1163000	12-24 x 2"	HWH	#5	.125-.500	1.000	1,500	
1387253	1/4-14 x 7/8"	HWH	#1	.018-.095	.320	2,500	
1175153	1/4-14 x 1-1/8"	HWH	#1	.018-.095	.395	2,500	• Standing seam roof system endlaps.
1616000	1/4-14 x 1-1/4"	HWH	#3	.036-.210	.630	2,000	• Stitch roof and wall sidelaps. SSR endlaps.
1178253	1/4-14 x 3/4"	HWH	AB	.012-.048	.435	2,500	• Replacement screw for #12 and 1/4 diameter fasteners.
1180225	17-14 x 1"	HWH	AB	-	.686	1,500	

Performance Data

PULLOUT VALUES (average lbs. ultimate)

Fastener		Steel Gauge									
Dia.	Pt.	26	24	22	20	18	16	14	12	3/16	1/4
12	2	156	243	283	375	605	848	1181	1856	3520	-
12	5	-	-	-	-	-	-	-	1527	3701	3999
1/4	5	-	-	-	-	-	-	-	1507	3300	5059
1/4	1	208	329	428	562	800	1151	-	-	-	-
	AB	235	365	496	597	702	926	1180	1690	3446	4212
17	AB	225	261	350	442	553	752	1122	1716	3523	4250

FASTENER VALUES

Fastener (dia-tpi)	Tensile (lbs. min.)	Shear (avg. lbs. ult.)	Torque (min. in. lbs.)
12-14	2778	2000	92
12-24	3188	2100	100
1/4-14	4060	2600	150
1/4-28	5577	3310	234
17-14	5300	3200	180

SHEET STEEL GAUGES

Gauge No.	12	14	16	18	20	22	24	26
Decimal Equivalent	.105"	.075"	.060"	.048"	.036"	.030"	.024"	.018"

SHEAR VALUES (average lbs. ultimate)

Fastener		Steel Gauge (lapped)									
Dia.	Pt.	26	24	22	20	18	16	14	1/8	3/16	1/4
12	2	365	600	623	898	1370	1758	2138	2202	-	-
12	5	-	-	-	-	-	-	-	2700	2720	2762
1/4	5	-	-	-	-	-	1597	2005	2350	2792	3310
1/4	1	511	849	885	1244	1764	-	-	-	-	-
	AB	422	482	669	889	1157	-	-	-	-	-
17	AB	459	745	989	958	1415	-	-	-	-	-

The values listed are ultimate averages achieved under laboratory conditions and apply to Buildex manufactured fasteners only. Appropriate safety factors should be applied to these values for design purposes.

Installation Guidelines

- A standard screwgun with a depth sensitive nosepiece should be used to install Teks®. For optimal fastener performance, the screwgun should be a minimum of 6 amps and have an RPM range of 0-2500.
- Adjust the screwgun nosepiece to properly seat the fastener.
- New magnetic sockets must be correctly set before use. Remove chip build-up as needed.
- Overdriving may result in torsional failure of the fastener or stripout of the substrate.
- The fastener must penetrate beyond the metal structure a minimum of 3 pitches of thread.

Properly Seated Washers

ITW Buildex

1349 West Bryn Mawr Avenue
Itasca, Illinois 60143
630-595-3500 Fax: 630-595-3549
www.itwbuildex.com

Scots®, Teks®, ABOT™, and Climaseal® are trademarks of ITW Buildex and Illinois Tool Works, Inc.

© 2010 ITW Buildex and Illinois Tool Works, Inc.

FOLHD East Side Conduit

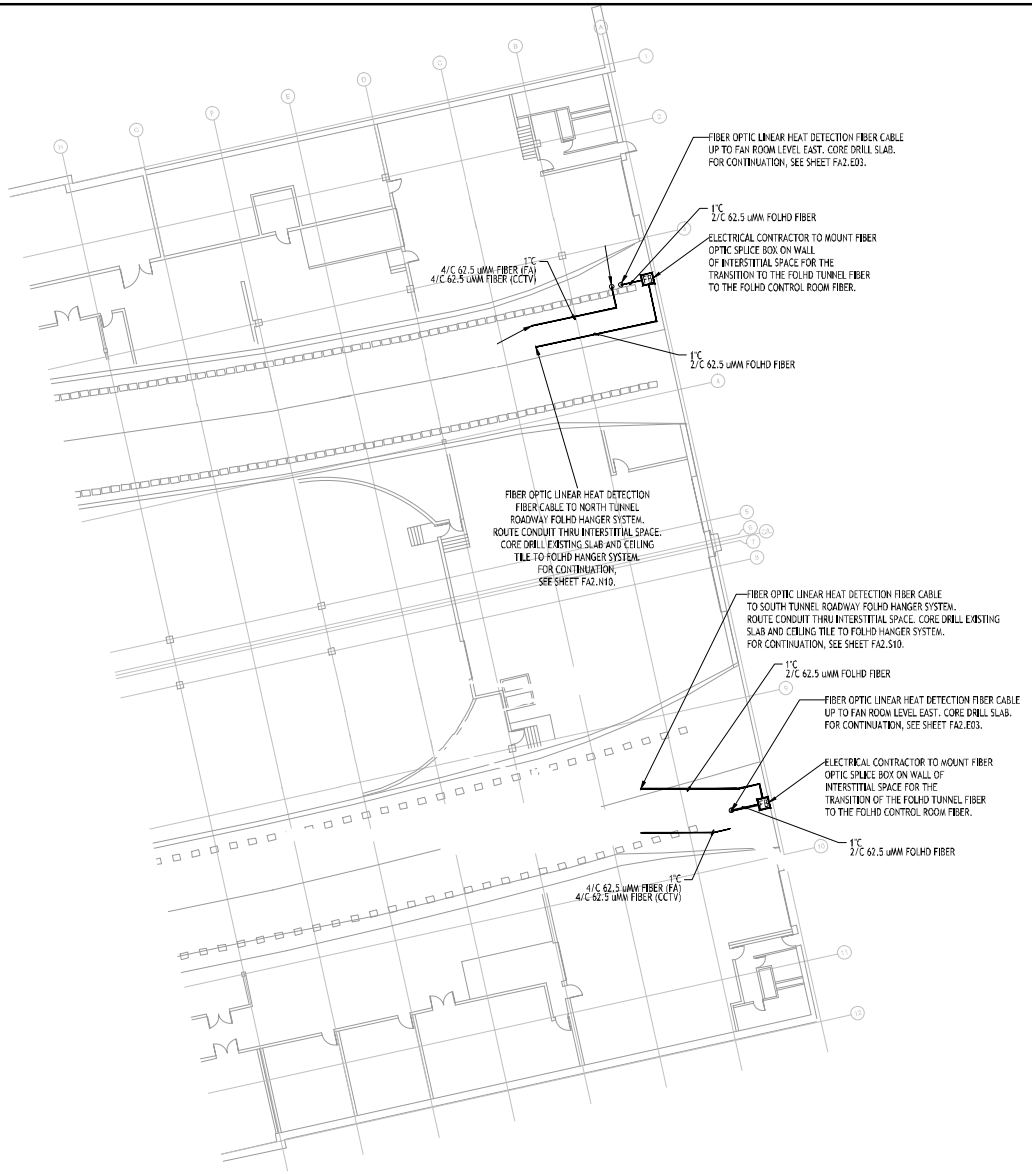

N

1 ROADWAY LEVEL EAST
SCALE: 1/16" = 1'-0"

16' 8' 0 16'
SCALE:1/16"=1'-0"

BARNARD EJMT TEAM

BARNARD · RONDINELLI · ELP CONSULTING ENGINEERS · Eastern States Fire Protection Co. · BCER Engineering · Sturgeon Electric

EISENHOWER/JOHNSON MEMORIAL TUNNEL
FIXED FIRE SUPPRESSION SYSTEM
DESIGN BUILD PROJECT
Project No. C0703-360 Subaccount 17810

RFC DOCUMENTS - 2015-04-29

Revisions				
Num	Description	Date	DRAWN BY: B.T.L.	CHECKED BY: AEE Jr.

FIRE ALARM: ROADWAY LEVEL EAST

Drawing Number

FA2.E02

IF THIS SHEET IS NOT 22"x34" IT IS NOT PLOTTED TO SCALE

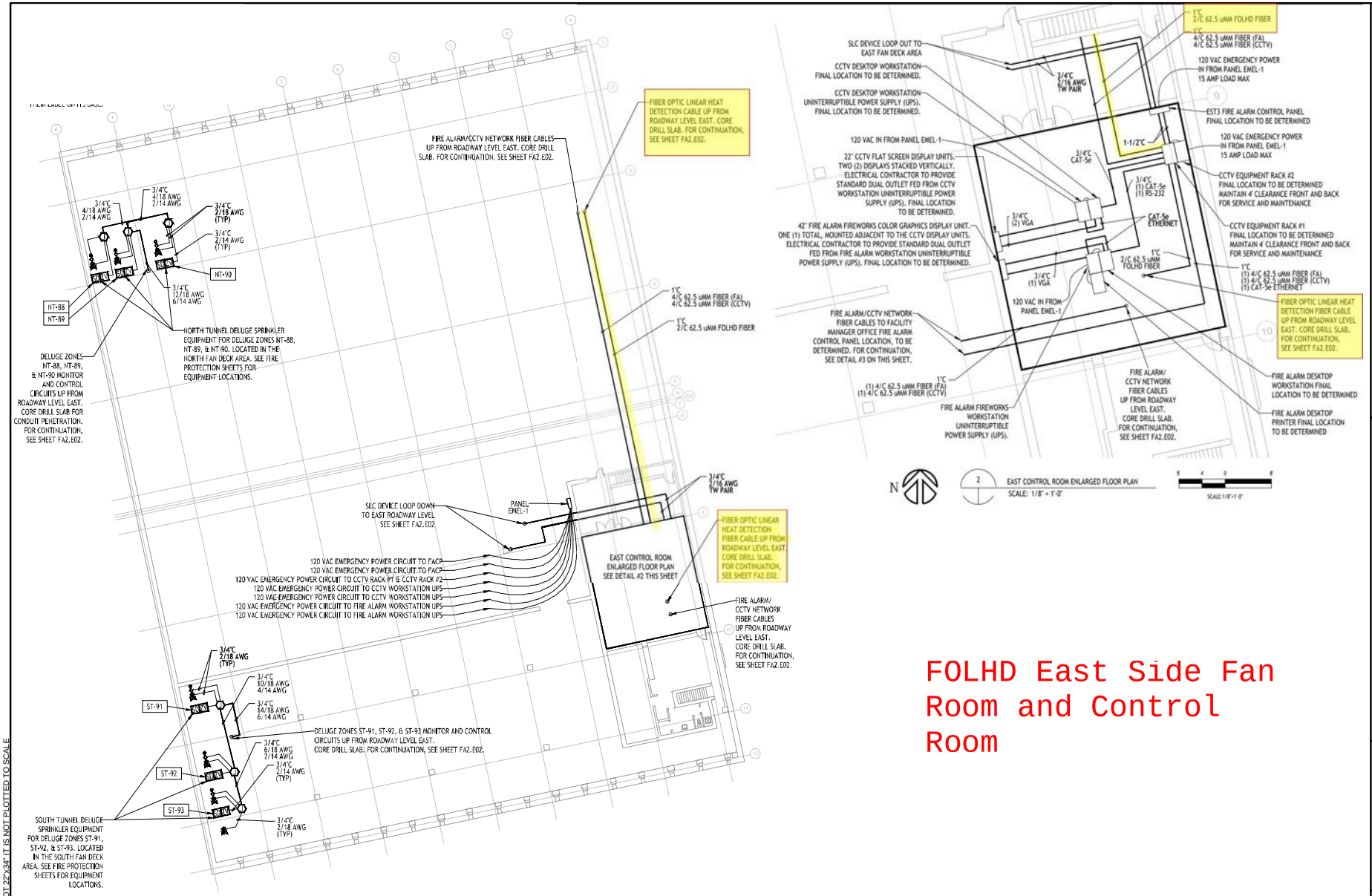

FOLHD East Side Fan Room and Control Room

BARNARD EJMT TEAM

BARNARD RONDINELLI ELP CONSULTING ENGINEERS Eastern States Fire Protection Co. BCER Engineering Sturgeon Electric

EISENHOWER/JOHNSON MEMORIAL TUNNEL
FIXED FIRE SUPPRESSION SYSTEM
DESIGN BUILD PROJECT
Project No. C0703-360 Subaccount 17810
RFC DOCUMENTS - 2015-04-29

Revisions				
Num	Description	Date	DRAWN BY	B.T.L.
			CHECKED BY	AEE Jr.

FIRE ALARM: FAN LEVEL EAST

Drawing Number
FA2.E03

IF THIS SHEET IS NOT 22"x34" IT IS NOT PLOTTED TO SCALE

FOLHD Typical Roadway View

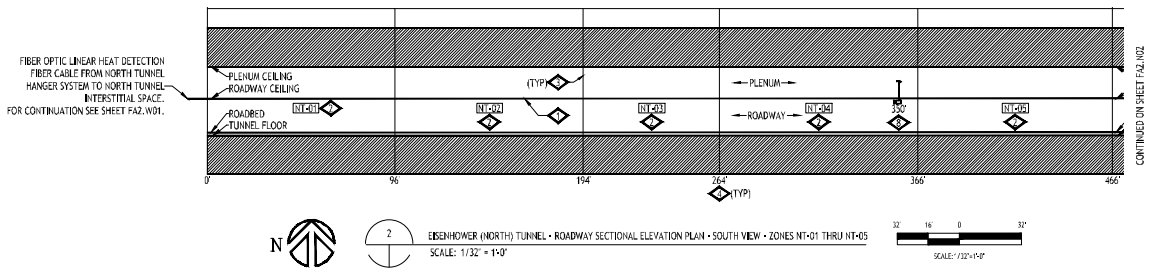

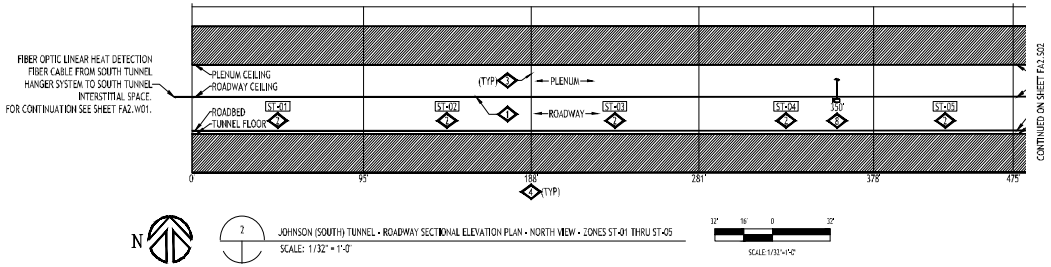

BARNARD EJMT TEAM

BARNARD · RONDINELLI · ELF CONSULTING ENGINEERS · Eastern States Fire Protection Co. · BCER Engineering · Sturgeon Electric

EISENHOWER/JOHNSON MEMORIAL TUNNEL
FIXED FIRE SUPPRESSION SYSTEM
DESIGN BUILD PROJECT
Project No. C0703-360 Subaccount 17810
RFC DOCUMENTS - 2015-04-29

Revisions				
Num	Description	Date	DRAWN BY: B.T.L.	CHECKED BY: A.E.J.

FIRE ALARM:
EISENHOWER TUNNEL
FP ZONES NT-01 TO NT-05

Drawing Number
FA2.N01

IF THIS SHEET IS NOT 22"x34" IT IS NOT PLOTTED TO SCALE

FOLHD West Portal Conduit

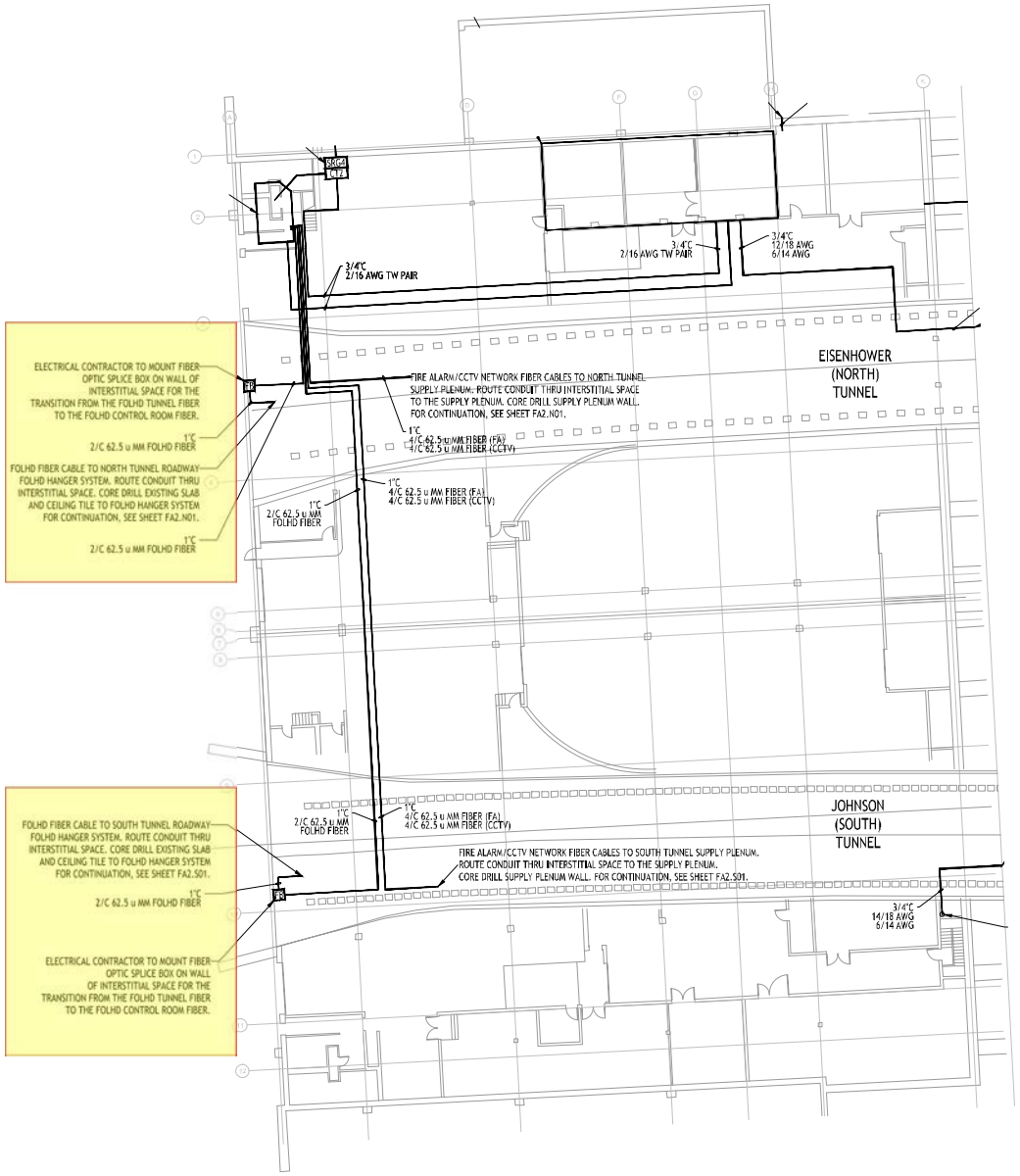

BARNARD EJMT TEAM

BARNARD · RONDINELLI · ELP CONSULTING ENGINEERS · Eastern States Fire Protection Co. · BCER · Sturgeon Electric

EISENHOWER/JOHNSON MEMORIAL TUNNEL
FIXED FIRE SUPPRESSION SYSTEM
DESIGN BUILD PROJECT
Project No. C0703-360 Subaccount 17810
RFC DOCUMENTS - 2015-04-29

Revisions				
Num	Description	Date	DRAWN BY: B.T.L.	CHECKED BY: AEE Jr

FIRE ALARM:
ROADWAY LEVEL WEST

Drawing Number
FA2.W01

IF THIS SHEET IS NOT 22"x34" IT IS NOT PLOTTED TO SCALE

FOLHD West Mezzanine Conduit

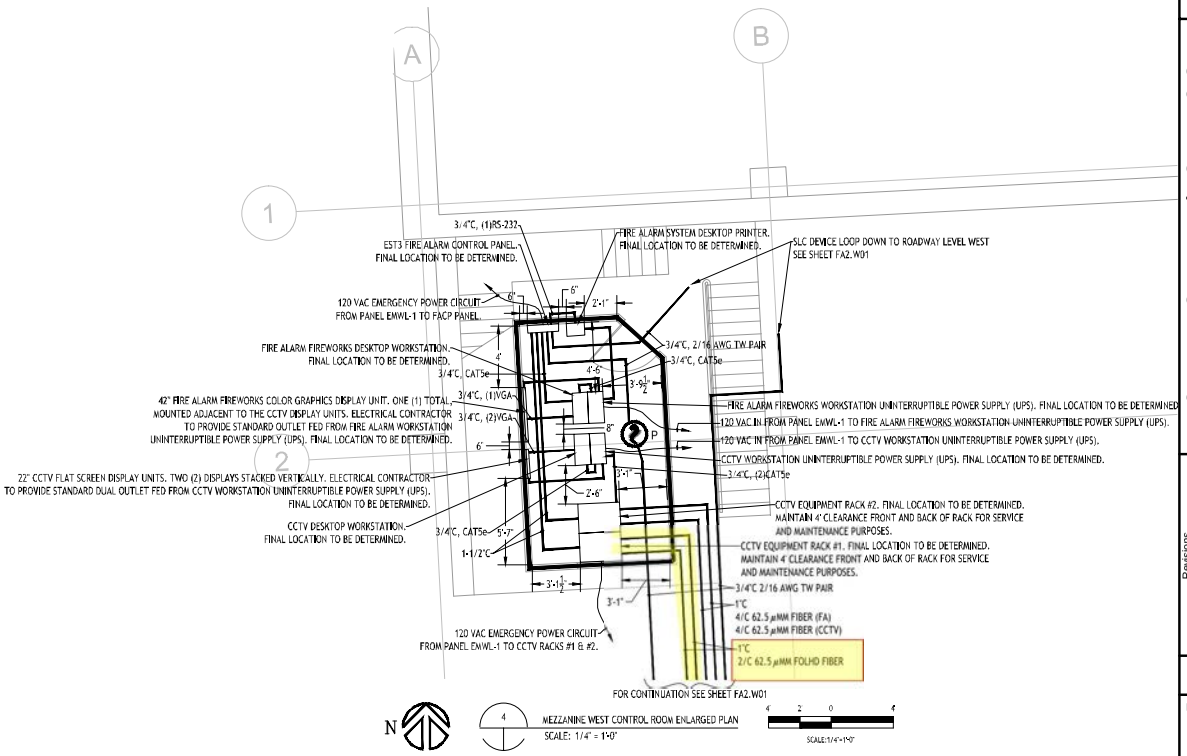

BARNARD EJMT TEAM

BARNARD · RONDINELLI · Eastern States Fire Protection Co. · BCER · Sturgeon Electric · ELP Consulting Engineers

EISENHOWER/JOHNSON MEMORIAL TUNNEL
FIXED FIRE SUPPRESSION SYSTEM
DESIGN BUILD PROJECT
Project No. C0703-360 Subaccount 17810
RFC DOCUMENTS - 2015-04-29

Revisions

Num	Description	Date

DRAWN BY: B.T.L. CHECKED BY: AEE Jr

FIRE ALARM: ROADWAY LEVEL WEST

Drawing Number
FA2.W02

IF THIS SHEET IS NOT 22"x34" IT IS NOT PLOTTED TO SCALE

Sturgeon ELECTRIC
12150 E 112TH AVE, HENDERSON, CO 80640

MYR GROUP

PLENUM CONDUIT

PREPARED BY: **Jason Willis**
CELL PHONE: **(303) 944-1190**
FAX: **(303) 227-6978**
OFFICE: **303-286-8000**
EMAIL: **JWillis@myrgroup.com**

Sturgeon Electric Company, Inc.
12150 East 112th Avenue
Henderson, CO 80640
303-286-8000

Plenum Conduit

Four different runs of Intermediate Metal Conduit (IMC) have been installed in the supply plenums of both the Eisenhower (North) and Johnson (South) tunnels. Three of these conduits are ¾" and one conduit is 1". The 1" conduit contains the multimode fiber that feeds the fire alarm system and closed circuit television system. One of the ¾" conduits provides power to the camera system, another provides the power and controls for the sprinkler system and the final conduit provides 480v power to the fire alarm panels and remote control panels.

The IMC conduit has been secured to the supports provided and installed by Western States Fire Protection. An additional intermediate support has also been installed in the form of back to back 1 5/8' strut. This secondary support is not load bearing but is intended to eliminate any movement of the conduit between the Western States Supports.

The plenum conduit and associated wiring, like all of the electrical conduit installed throughout the project, is intended to last the 30 years as required under the contract with little to no maintenance or operation training to offer. In the unlikely event that a piece of conduit would need to be replaced all of the wire/fiber installed in that conduit will have to be uninstalled between the two closest pull points (i.e., pull box, FPC/RCP panel, camera box etc…) The conduit can then be removed and replaced as necessary. The more likely material that would need to be replaced will be the support clamps that may become loose over the 30 life of the system. To prevent this sturgeon suggests having CDOT personnel periodically inspect the support systems in both plenums and throughout the tunnel. By lightly pushing or pulling on the conduit it can be determined if the strut clamps are not secured to the supports. In this case the existing clamps can be tightened by use of screw driver or wrench.

Sturgeon Electric Company, Inc.
12150 East 112th Avenue
Henderson, CO 80640
303-286-8000

Plenum Conduit-

Areas of Concern:

The conduit systems for this project have been installed in accordance with the National Electrical Code and as such should remain secure and in place with little to no maintenance. However, do to the high air flow in the plenums the conduit supports will face greater strain than typical conduit systems. As such, there may be a risk of the hardware being loosened over a prolonged period of time. This risk can be eliminated by yearly inspections of the conduit systems.

Preventative Maintenance: Once Per Year

There is no required maintenance of conduit. However, Sturgeon suggests having CDOT personnel periodically inspect the support systems in both plenums and throughout the tunnel. By lightly pushing or pulling on the conduit it can be determined if the strut clamps are not secured to the supports. In this case the existing clamps can be tightened by use of screw driver or wrench.

Intermediate Metal Conduit (IMC) and Kwik-Couple® IMC

allied TUBE & CONDUIT®
A PART OF atkore INTERNATIONAL

NEC recognizes Allied IMC for same uses as RIGID

IMC Conduit

- Light-weight ductile steel conduit for long life and easy bending
- Weighs 1/3 less than rigid conduit
- Saves up to 30% in cost over GRC
- Hot galvanized exterior to increase corrosion resistance and protect against white rust
- Interior coating creates a smooth, continuous raceway for fast wire-pulling
- UL 1242 listed and manufactured in accordance with ANSI C80.6
- True Color IMC special orders available
- Available in trade sizes 1/2(16) thru 4(103)

Kwik-Release End Cap No Tools Needed!

IMC (Intermediate Metal Conduit) Weights and Dimensions

Trade Size	Metric Designator	Average Outside Diameter[1]		Average Wall Thickness[2]		Approximate Weight Per 100 Ft. (30.5M)		Quantity in Master Bundle	
		in.	mm.	in.	mm.	lb.	kg.	ft.	m.
1/2	16	0.815	20.70	0.070	1.79	62	28.1	3500	1067.5
3/4	21	1.029	26.13	0.075	1.90	84	38.1	2500	762.5
1	27	1.290	32.76	0.085	2.16	119	54.0	1700	518.5
1-1/4	35	1.638	41.60	0.085	2.16	158	71.7	1350	411.8
1-1/2	41	1.883	47.82	0.090	2.29	194	88.0	1100	335.5
2	53	2.360	59.94	0.095	2.41	256	116.1	800	244.0
2-1/2	63	2.857	72.56	0.140	3.56	441	200.0	370	112.9
3	78	3.476	88.29	0.140	3.56	543	246.3	300	91.5
3-1/2	91	3.971	100.86	0.140	3.56	629	285.3	240	73.2
4	103	4.466	113.43	0.140	3.56	700	317.5	240	73.2

[1]Outside diameter tolerances:
+/- .005 in. (.13mm) for trade sizes 1/2 (16mm) through 1 (25mm)
+/- .0075 in. (.19mm) for trade sizes 1-1/4 (36mm) through 2 (53mm)
+/- 0.10 in. (.25mm) for trade sizes 2-1/2 (63mm) through 4 (103mm).

[2]Wall thickness tolerances:
+ 0.15 in. (.38mm) and - .000 for trade sizes 1/2 (13mm) through 2 (53mm)
+ 0.20 in. (.51mm) and - .000 for trade sizes 2-1/2 (63mm) through 4 (103mm).
NOTE: Length = 10 ft. (3.05m) with a tolerance of +/- .25 in. (6.35mm).
NEMA Standard

Plenum Conduit Supports

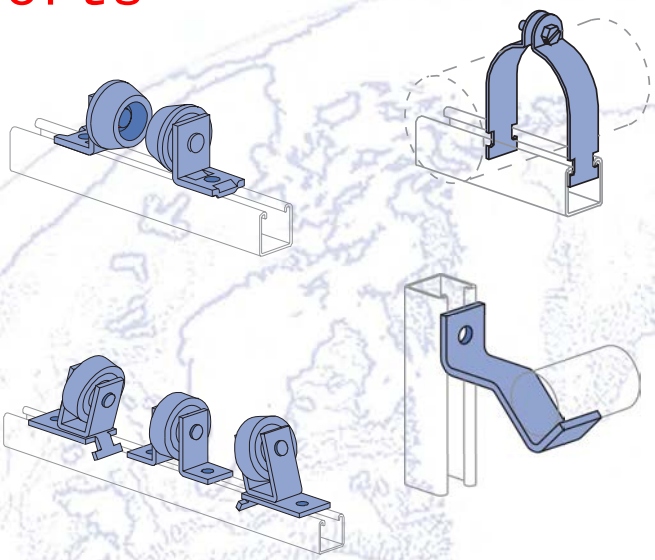

Pipe/Conduit Clamps 102-105
Unicushion® 106
Pipe & Tubing (Cush-A-Clamp®) Clamps 107-110
Pipe Hangers 111
Pipe Rollers 111-112
Pipe Brackets 113
Reference Tables 114-120

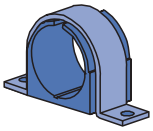

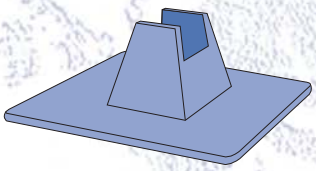

MATERIAL

Unistrut pipe clamps, unless noted, are punch-press made from hot-rolled, pickled and oiled steel plates, strip or coil, and conform to ASTM specifications A1008, A575, A576, A635, or A36. The fitting steel also meets the physical requirements of ASTM A1011 SS GR 33. The pickling of the steel produces a smooth surface free from scale.

Many items are also available in stainless steel.

Consult factory for ordering information.

FINISHES

Pipe supports are available in:

- Electro-galvanized (EG), conforming to ASTM B633 Type III SC1
- Hot-dipped galvanized (HG), conforming to ASTM A123 or A153 (hardware)
- Perma-Green III (GR), and plain (PL).

APPLICATION

Unistrut pipe clamps, pipe hangers, brackets and rollers are designed for the support of electrical and mechanical services. Supports to meet nearly every requirement can be attained using Unistrut Metal Framing components.

DIMENSIONS

Imperial dimensions are illustrated in inches. Metric dimensions are shown in parenthesis or as noted. Unless noted, all metric dimensions are in millimeters and rounded to one decimal place.

DESIGN BOLT TORQUE

BOLT SIZE	¼"-20	5/16"-18	⅜"-16	½"-13	⅝"-11	¾"-10
Rec.Torque Ft/Lbs *(N•m)*	6 *(8)*	11 *(15)*	19 *(26)*	50 *(68)*	100 *(136)*	125 *(170)*
Max Torque Ft/Lbs *(N•m)*	7 *(9)*	15 *(20)*	25 *(34)*	70 *(95)*	125 *(170)*	135 *(183)*

Note: When tightening ¼" screws used with a two piece pipe clamp, a torque of 5 foot pounds (60 inch-pounds) should be used.

DESIGN LOAD

Design load data, where shown, is based on the ultimate strength of the connection with a safety factor of 5.0, unless otherwise noted.

Pipe Clamps In Special Materials (P1109, P1211, P1425, P2024 Series)

Material	Add Suffix to P/N	Example
Steel Strap, Everdur Hardware	E	P1109 E
Copper Coated Steel Strap & Hardware	CC	P1109 CC
Aluminum Material: Malleable Iron.	AL	P1109 AL
Stainless Steel 304 or 316	SS or ST	P1109 SS
Plastic Coated Steel Straps	PC	P1109 PC

Plenum Conduit Intermediate Support

P1001

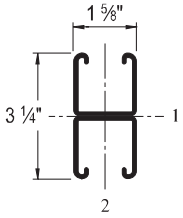

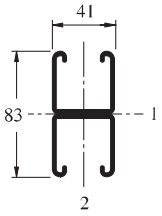

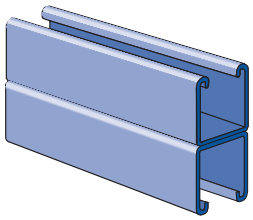

Wt/100 Ft: 378 Lbs (562 kg/100 m)
Allowable Moment 14,360 In-Lbs (1,620 N•m)
12 Gauge Nominal Thickness .105" (2.7mm)

Channel Nuts (Refer to Hardware Section for Details)

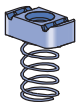

P1006-0832
P1006-1024
P1006-1420
P1007
P1008
P1009
P1010

P1008T
P1006T1420
P1010T

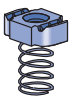

P1024
P1012S
P1023S

P1012
P1023
P1024S

P3006-0832
P3006-1024
P3006-1420
P3007
P3008
P3009
P3010

P3016-0632
P3016-0832
P3016-1024
P3016-1420

Channel Finishes: PL, GR, HG, PG; Standard Lengths: 10' & 20'

Plenum Conduit Wire

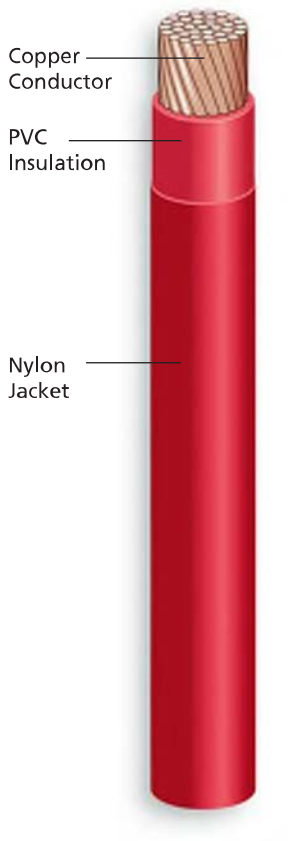

Engineering Specifications:

Standards:

Underwriters Laboratories Standard UL-83, UL-1063, UL-758
AWM Spec 1316, 1317, 1318, 1319, 1320, 1321
ASTM Stranding Class B3, B8, B787
Federal Specification A-A-59544
Canadian Standards Association C22.2 No. 75
NEMA WC70/ICEA S-95-658

Listed Solid E-123774
Stranded E-156879

Construction:

Conductors:

Solid, uncoated copper conductors per ASTM-B3
Stranded, uncoated copper conductors per ASTM-B3, ASTM-B787 and ASTM-B8

Insulation:

Color-coded Polyvinyl Chloride (PVC), heat- and moisture-resistant, flame-retardant compound per UL-1063 and UL-83

Applications:

Type THHN-THWN-2 building wire is intended for general purpose applications as defined by the National Electrical Code (NEC). Suitable for new construction or rewiring for 600-volt applications. When used as type THHN or THWN-2, the conductor is suitable for use in wet or dry locations at temperatures not to exceed 90°C or not to exceed 75°C in oil or coolants. When used as type MTW, conductor is suitable for use in dry locations at 90°C, or not to exceed 60°C in wet locations or where exposed to oils or coolants. When used as type AWM temperatures should not exceed 105°C in dry locations.

Features:

Slick, Nylon outer jacket for easy pulling. VW-1 rated 14 AWG - 1 AWG. 1/0 AWG and larger is rated for CT use. 6 AWG and larger is rated for sunlight resistance in all colors. All sizes are rated "Gasoline and oil resistant II."

Jacket:

A tough, polyamide, Nylon outer covering per UL-1063 and UL-83.

Size (AWG or kcmil)	Number of Strands	Conductor Size (mm²)	Insulation Thickness (inches)		Outside Diameter		Allowable Ampacities*			Approx. Net Weight (lbs./1000 ft.)	Standard Packaging
			PVC	Nylon	(inches)	(mm)	60°C	75°C	90°C		
14	Solid	2.08	.015	.004	.101	2.57	15	15	15	15	2000 carton (4x500), 2500' reels
12	Solid	3.31	.015	.004	.120	3.05	20	20	20	23	2000 carton (4x500), 2500' reels
10	Solid	5.26	.020	.004	.149	3.78	30	30	30	37	1000 carton (2x500), 2500' reels
14	19	2.08	.015	.004	.109	2.77	15	15	15	17	2000 carton (4x500), 2500' reels
12	19	3.31	.015	.004	.127	3.23	20	20	20	24	2000 carton (4x500), 2500' reels
10	19	5.26	.020	.004	.160	4.07	30	30	30	38	1000 carton (2x500), 2500' reels
8	19	8.37	.030	.005	.212	5.39	40	50	55	63	500' 1000' 2500' 5000' reels
6	19	13.3	.030	.005	.248	6.30	55	65	75	95	500' 1000' 2500' 5000' 25,000' reels
4	19	21.2	.040	.006	.317	8.06	70	85	95	153	500' 1000' 2500' 5000' 20,000' reels
3	19	26.7	.040	.006	.344	8.74	85	100	110	189	500' 1000' 2500' 5000' 15,000' reels
2	19	33.6	.040	.006	.375	9.53	95	115	130	234	500' 1000' 2500' 5000' 14,000' reels
1	19	42.4	.050	.007	.435	11.05	110	130	150	299	500' 1000' 2500' 5000' 22,000' reels
1/0	19	53.5	.050	.007	.474	12.04	125	150	170	372	500' 1000' 2500' 5000' 16,000' reels
2/0	19	67.4	.050	.007	.518	13.16	145	175	195	462	500' 1000' 2500' 5000' 14,000' reels
3/0	19	85.0	.050	.007	.568	14.43	165	200	225	572	500' 1000' 2500' 5000' 12,000' reels
4/0	19	107	.050	.007	.624	15.85	195	230	260	712	500' 1000' 2500' 5000' 9000' reels
250	37	127	.060	.008	.678	17.23	215	255	290	851	500' 1000' 2500' 4000' 8500' reels
300	37	152	.060	.008	.730	18.55	240	285	320	1010	500' 1000' 3500' 7500' reels
350	37	177	.060	.008	.777	19.74	260	310	350	1170	500' 1000' 3000' 6000' reels
400	37	203	.060	.008	.821	20.86	280	335	380	1330	500' 1000' 3000' 5000' reels
500	37	253	.060	.008	.902	22.91	320	380	430	1650	500' 1000' 2500' 4000' reels
600	61	304	.070	.009	1.051	26.70	355	420	475	1985	500' 1000' 2000' 3000' reels
750	61	380	.070	.009	1.156	29.37	400	475	535	2455	500' 1000' 1500' 2500' reels
1000	61	507	.070	.009	1.310	33.28	455	545	615	3252	500' 1000' 2000' reels

*Allowable ampacity shown above is per the National Electrical Code. The above data is approximate and subject to normal manufacturing tolerances.

PRINT LEGEND:

SOLID CONDUCTOR SIZES 14 AWG THROUGH 10 AWG: E123774 (SIZE) AWG TYPE THHN OR THWN-2 GR II VW-1 600 VOLTS (UL) OR AWM OR C-(UL) TYPE T90 NYLON OR TWN 75 FT1. DATE/TIME/OPER/QC
STRANDED CONDUCTOR SIZES 14 AWG THROUGH 8 AWG: E156879 (SIZE) AWG TYPE MTW OR THHN OR THWN-2 GR II VW-1 600 VOLTS (UL) OR AWM OR C-(UL) TYPE T90 NYLON OR TWN 75 FT1 DATE/TIME/OPER/QC
STRANDED CONDUCTORS-SIZES 6 AWG THROUGH 1 AWG: E156879 (SIZE) TYPE MTW OR THHN OR THWN-2 OR GR II SUN RES VW-1 600 VOLTS (UL) OR AWM OR C(UL) TYPE T90 NYLON OT TWN 75 FT1 DATE/TIME/OPER/QC
CONDUCTOR SIZES 1/0 AWG THROUGH 1000 KCMIL: E156879 (SIZE) TYPE MTW OR THHN OR THWN-2 GR II SUN RES FOR CT USE (UL) OR C(UL) TYPE T90 NYLON OR TWN 75 FT1 DATE/TIME/OPER/QC

FEEDER TABLE

OVERCURRENT DEVICE SETTINGS	FEEDER IDENTIFIER	COPPER CONDUCTORS INSULATION PER SPECIFICATIONS	FEEDER IDENTIFIER	COPPER CONDUCTORS INSULATION PER SPECIFICATIONS
20	3WG20	(3#12 + 1#12G)1/2"C	4WG20	(4#12 + 1#12G)3/4"C
30	3WG30	(3#10 + 1#10G)3/4"C	4WG30	(4#10 + 1#10G)3/4"C
40	3WG40	(3#8 + 1#10G)3/4"C	4WG40	(4#8 + 1#10G)3/4"C
50	3WG50	(3#6 + 1#10G)3/4"C	4WG50	(4#6 + 1#10G)1"C
60	3WG60	(3#4 + 1#10G)1"C	4WG60	(4#4 + 1#10G)1-1/4"C
70	3WG70	(3#4 + 1#8G)1"C	4WG70	(4#4 + 1#8G)1-1/4"C
100	3WG100	(3#1 + 1#8G)1-1/4"C	4WG100	(4#2 + 1#8G)1-1/4"C
125	3WG125	(3#1/0 + 1#6G)1-1/2"C	4WG125	(4#1/0 + 1#6G)2"C
150	3WG150	(3#1/0 + 1#6G)1-1/2"C	4WG150	(4#1/0 + 1#6G)2"C
175	3WG175	(3#2/0 + 1#6G)2"C	4WG175	(4#2/0 + 1#6G)2"C
200	3WG200	(3#3/0 + 1#6G)2"C	4WG200	(4#3/0 + 1#6G)2"C
225 *	3WG225	(3#4/0 + 1#3/0G)2"C		
250 *	3WG250	(3#250KCMIL + 1#3/0G)2-1/2"C		
300	3WG300	(3#350KCMIL + 1#4G)2-1/2"C	4WG300	(4#350KCMIL + 1#4G)3-1/2"C
350	3WG350	(3#500KCMIL + 1#3G)3"C	4WG350	(4#500KCMIL + 1#3G)3-1/2"C
400	3WG400	(3#500KCMIL + 1#3G)3"C	4WG400	(4#500KCMIL + 1#3G)3-1/2"C
500	3WG500	2[(3#250KCMIL + 1#2G)2-1/2"C]	4WG500	2[(4#250KCMIL + 1#2G)3"C]
600	3WG600	2[(3#350KCMIL + 1#1G)2-1/2"C]	4WG600	2[(4#350KCMIL + 1#1G)3"C]
800	3WG800	2[(3#500KCMIL + 1#1/0G)3"C]	4WG800	2[(4#500KCMIL + 1#1/0G)3-1/2"C]
20	2WG20	(2#12 + 1#12G)3/4"C		
30	2WG30	(2#10 + 1#10G)3/4"C		

* GROUND WIRE SIZE ADJUSTED TO ACCOMMODATE 1200A OVER-CURRENT DEVICE.

BARNARD EJMT TEAM

BCER Engineering · BARNARD · RONDINELLI · Sturgeon Electric · Western States Fire Protection Co. · ILF Consulting Engineers

EISENHOWER/JOHNSON MEMORIAL TUNNEL
FIXED FIRE SUPPRESSION SYSTEM
DESIGN BUILD PROJECT
Project No. C0703-360 Subaccount 17810
RFC DOCUMENTS - 2015-04-29

Revisions
Num | Description | Date
DRAWN BY: - | CHECKED BY: -

ELECTRICAL GENERAL INFORMATION

Drawing Number
E1.0

IF THIS SHEET IS NOT 22"x34" IT IS NOT PLOTTED TO SCALE

XREFS=(xs-tb) Layouts=(E1.0 ELECTRICAL GENERAL INFORMATION)
\\fileserv\jobs\87914002\Dwg\ejmt - fixed fire suppression system\Sheets\Electrical\E1.0 ELECTRICAL GENERAL INFORMATION.dwg FEB 3, 2015 10:32AM CHENDERSON

West Side Electrical

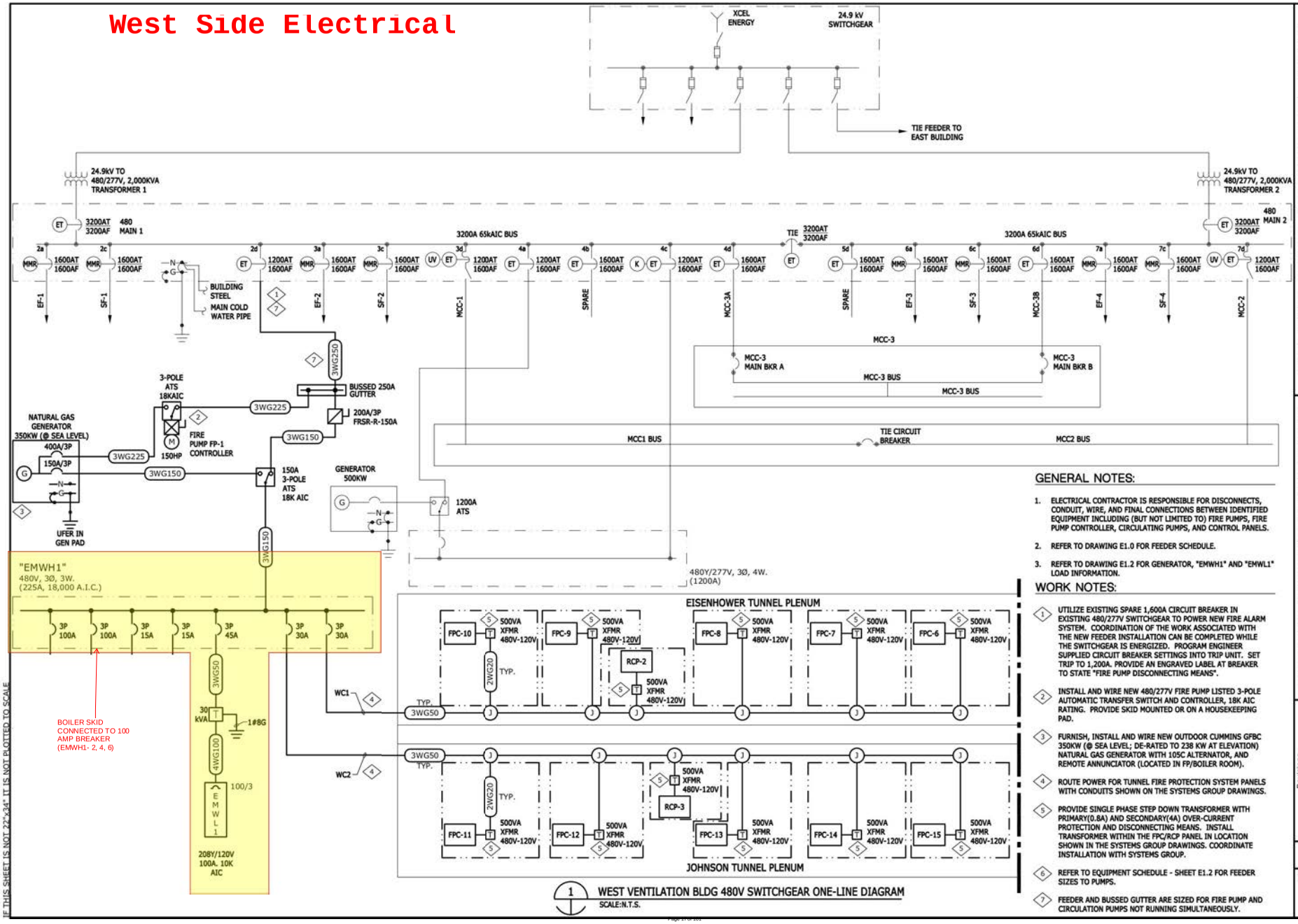

1 WEST VENTILATION BLDG 480V SWITCHGEAR ONE-LINE DIAGRAM
SCALE:N.T.S.

GENERAL NOTES:

1. ELECTRICAL CONTRACTOR IS RESPONSIBLE FOR DISCONNECTS, CONDUIT, WIRE, AND FINAL CONNECTIONS BETWEEN IDENTIFIED EQUIPMENT INCLUDING (BUT NOT LIMITED TO) FIRE PUMPS, FIRE PUMP CONTROLLER, CIRCULATING PUMPS, AND CONTROL PANELS.
2. REFER TO DRAWING E1.0 FOR FEEDER SCHEDULE.
3. REFER TO DRAWING E1.2 FOR GENERATOR, "EMWH1" AND "EMWL1" LOAD INFORMATION.

WORK NOTES:

1. UTILIZE EXISTING SPARE 1,600A CIRCUIT BREAKER IN EXISTING 480/277V SWITCHGEAR TO POWER NEW FIRE ALARM SYSTEM. COORDINATION OF THE WORK ASSOCIATED WITH THE NEW FEEDER INSTALLATION CAN BE COMPLETED WHILE THE SWITCHGEAR IS ENERGIZED. PROGRAM ENGINEER SUPPLIED CIRCUIT BREAKER SETTINGS INTO TRIP UNIT. SET TRIP TO 1,200A. PROVIDE AN ENGRAVED LABEL AT BREAKER TO STATE "FIRE PUMP DISCONNECTING MEANS".
2. INSTALL AND WIRE NEW 480/277V FIRE PUMP LISTED 3-POLE AUTOMATIC TRANSFER SWITCH AND CONTROLLER, 18K AIC RATING. PROVIDE SKID MOUNTED OR ON A HOUSEKEEPING PAD.
3. FURNISH, INSTALL AND WIRE NEW OUTDOOR CUMMINS GFBC 350KW (@ SEA LEVEL; DE-RATED TO 238 KW AT ELEVATION) NATURAL GAS GENERATOR WITH 105C ALTERNATOR, AND REMOTE ANNUNCIATOR (LOCATED IN FP/BOILER ROOM).
4. ROUTE POWER FOR TUNNEL FIRE PROTECTION SYSTEM PANELS WITH CONDUITS SHOWN ON THE SYSTEMS GROUP DRAWINGS.
5. PROVIDE SINGLE PHASE STEP DOWN TRANSFORMER WITH PRIMARY(0.8A) AND SECONDARY(4A) OVER-CURRENT PROTECTION AND DISCONNECTING MEANS. INSTALL TRANSFORMER WITHIN THE FPC/RCP PANEL IN LOCATION SHOWN IN THE SYSTEMS GROUP DRAWINGS. COORDINATE INSTALLATION WITH SYSTEMS GROUP.
6. REFER TO EQUIPMENT SCHEDULE - SHEET E1.2 FOR FEEDER SIZES TO PUMPS.
7. FEEDER AND BUSSED GUTTER ARE SIZED FOR FIRE PUMP AND CIRCULATION PUMPS NOT RUNNING SIMULTANEOUSLY.

BARNARD EJMT TEAM
RONDINELLI
BARNARD
Sturgeon ELECTRIC
BCER Engineering
Tolerex Stokes Fire Protection Co.
ELF CONSULTING ENGINEERS

EISENHOWER/JOHNSON MEMORIAL TUNNEL
FIXED FIRE SUPPRESSION SYSTEM
DESIGN BUILD PROJECT
Project No. C0703-360 Subaccount 17810
RFC DOCUMENTS - 2015-04-29

Revisions
Num | Description | Date

DRAWN BY: | CHECKED BY:

WEST ELECTRICAL ONE-LINE DIAGRAM

Drawing Number
E2.1

IF THIS SHEET IS NOT 22"x34" IT IS NOT PLOTTED TO SCALE

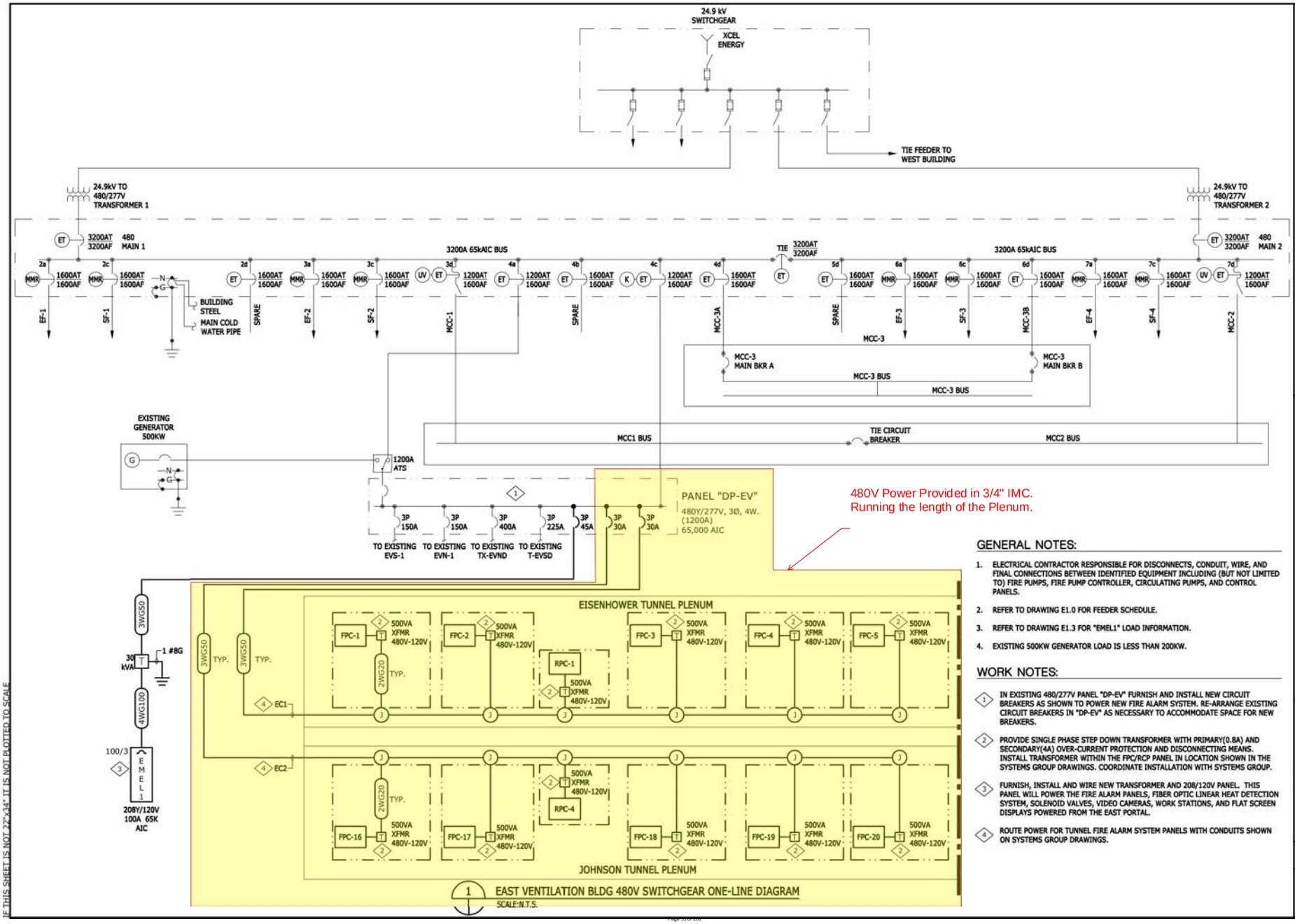

1 EAST VENTILATION BLDG 480V SWITCHGEAR ONE-LINE DIAGRAM
SCALE:N.T.S.

GENERAL NOTES:

1. ELECTRICAL CONTRACTOR RESPONSIBLE FOR DISCONNECTS, CONDUIT, WIRE, AND FINAL CONNECTIONS BETWEEN IDENTIFIED EQUIPMENT INCLUDING (BUT NOT LIMITED TO) FIRE PUMPS, FIRE PUMP CONTROLLER, CIRCULATING PUMPS, AND CONTROL PANELS.
2. REFER TO DRAWING E1.0 FOR FEEDER SCHEDULE.
3. REFER TO DRAWING E1.3 FOR "EMEL1" LOAD INFORMATION.
4. EXISTING 500KW GENERATOR LOAD IS LESS THAN 200KW.

WORK NOTES:

1. IN EXISTING 480/277V PANEL "DP-EV" FURNISH AND INSTALL NEW CIRCUIT BREAKERS AS SHOWN TO POWER NEW FIRE ALARM SYSTEM. RE-ARRANGE EXISTING CIRCUIT BREAKERS IN "DP-EV" AS NECESSARY TO ACCOMMODATE SPACE FOR NEW BREAKERS.
2. PROVIDE SINGLE PHASE STEP DOWN TRANSFORMER WITH PRIMARY(0.8A) AND SECONDARY(4A) OVER-CURRENT PROTECTION AND DISCONNECTING MEANS. INSTALL TRANSFORMER WITHIN THE FPC/RCP PANEL IN LOCATION SHOWN IN THE SYSTEMS GROUP DRAWINGS. COORDINATE INSTALLATION WITH SYSTEMS GROUP.
3. FURNISH, INSTALL AND WIRE NEW TRANSFORMER AND 208/120V PANEL. THIS PANEL WILL POWER THE FIRE ALARM PANELS, FIBER OPTIC LINEAR HEAT DETECTION SYSTEM, SOLENOID VALVES, VIDEO CAMERAS, WORK STATIONS, AND FLAT SCREEN DISPLAYS POWERED FROM THE EAST PORTAL.
4. ROUTE POWER FOR TUNNEL FIRE ALARM SYSTEM PANELS WITH CONDUITS SHOWN ON SYSTEMS GROUP DRAWINGS.

BARNARD EJMT TEAM

BARNARD · RONDINELLI · BCER Engineering · Sturgeon Electric · Rocky Mountain Fire Protection Co. · ALF CONSULTING ENGINEERS

EISENHOWER/JOHNSON MEMORIAL TUNNEL
FIXED FIRE SUPPRESSION SYSTEM
DESIGN BUILD PROJECT
Project No. C0703-360 Subaccount 17810
RFC DOCUMENTS - 2015-04-29

Revisions: Num | Description | Date

DRAWN BY: | CHECKED BY:

EAST ELECTRICAL ONE-LINE DIAGRAM

Drawing Number
E2.2

IF THIS SHEET IS NOT 22"x34" IT IS NOT PLOTTED TO SCALE

Conduit running from East Electrical Room to Plenums of both tunnels

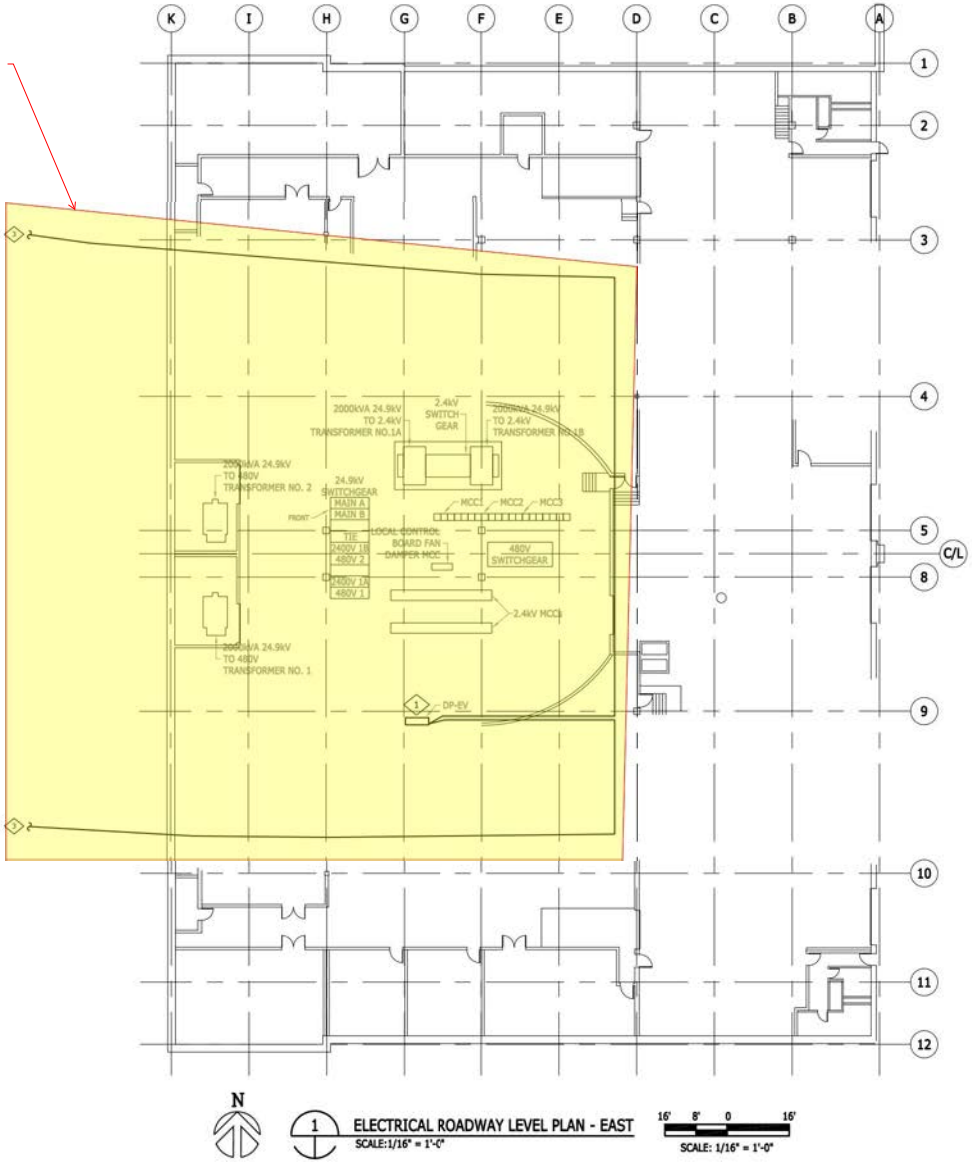

1 ELECTRICAL ROADWAY LEVEL PLAN - EAST
SCALE:1/16" = 1'-0"

16' 8' 0 16'
SCALE: 1/16" = 1'-0"

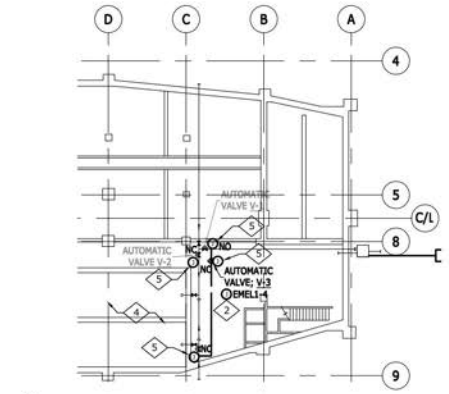

2 ELECTRICAL SEWER TREATMENT PLAN - EAST
SCALE:1/16" = 1'-0"

16' 8' 0 16'
SCALE: 1/16" = 1'-0"

BARNARD EJMT TEAM

BARNARD
RONDINELLI
Tenera Fire Protection Co.
BCER Engineering
Sturgeon Electric
ELF Consulting Engineers

EISENHOWER/JOHNSON MEMORIAL TUNNEL
FIXED FIRE SUPPRESSION SYSTEM
DESIGN BUILD PROJECT
Project No. C0703-360 Subaccount 17810

RFC DOCUMENTS - 2015-04-29

Revisions
Num | Description | Date

DRAWN BY: | CHECKED BY:

KEYPLAN

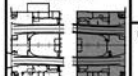

ELECTRICAL ROADWAY LEVEL PLAN - EAST

Drawing Number
E6.0

IF THIS SHEET IS NOT 22"x34" IT IS NOT PLOTTED TO SCALE

GENERAL NOTES:

1. IF FIELD CONDITIONS RESULT IN A CHANGE TO THE SHOP DRAWING INSTALLATION IN ANY WAY, CONTACT FAS SYSTEMS GROUP TO VERIFY PROPOSED CHANGES ARE COMPLIANT WITH NFPA 72 AND PROJECT REQUIREMENTS.
2. EACH CONTROL CABINET AND ADDRESSABLE DEVICE SHALL BEAR A TYPED LABEL INDICATING ITS ADDRESS OR DESIGNATION, WHICH CAN BE SEEN WITHOUT A LADDER OR LIFT. SMOKE AND HEAT DETECTORS SHALL HAVE THEIR LABEL ON ITS BASE.

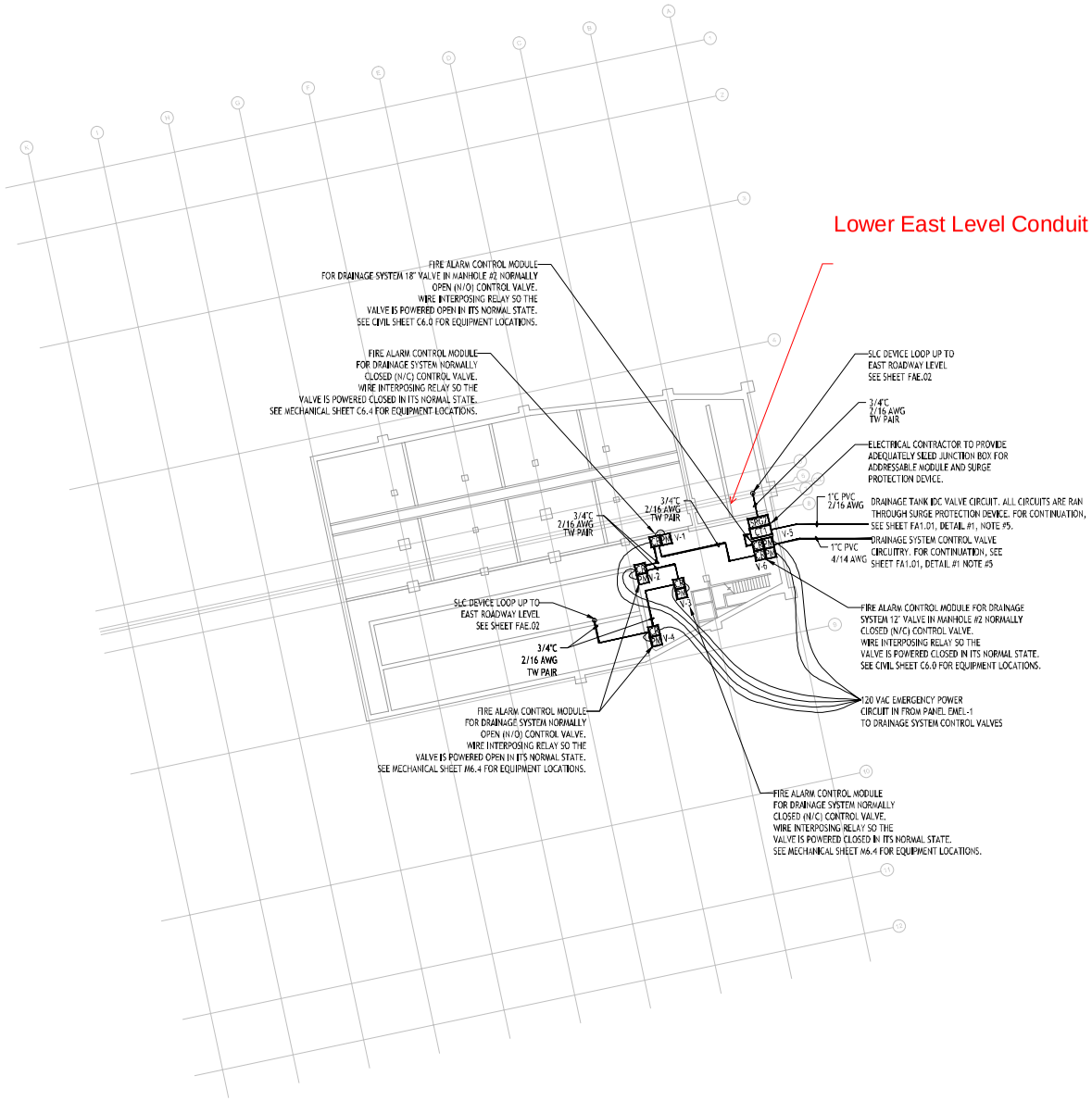

N

1 LOWER LEVEL EAST
SCALE: 1/16" = 1'-0"

16' 8' 0 16'
SCALE: 1/16"=1'-0"

IF THIS SHEET IS NOT 22"x34" IT IS NOT PLOTTED TO SCALE

BARNARD EJMT TEAM

BARNARD · RONDINELLI · ALP CONSULTING ENGINEERS · Eastern States Fire Protection Co. · Sturgeon Electric · BCER Engineering

EISENHOWER/JOHNSON MEMORIAL TUNNEL
FIXED FIRE SUPPRESSION SYSTEM
DESIGN BUILD PROJECT
Project No. C0703-360 Subaccount 17810
RFC DOCUMENTS - 2015-04-29

Revisions				
Num	Description	Date	DRAWN BY	B.T.L.
			CHECKED BY	AEE Jr.

FIRE ALARM: LOWER LEVEL EAST

Drawing Number
FA2.E01

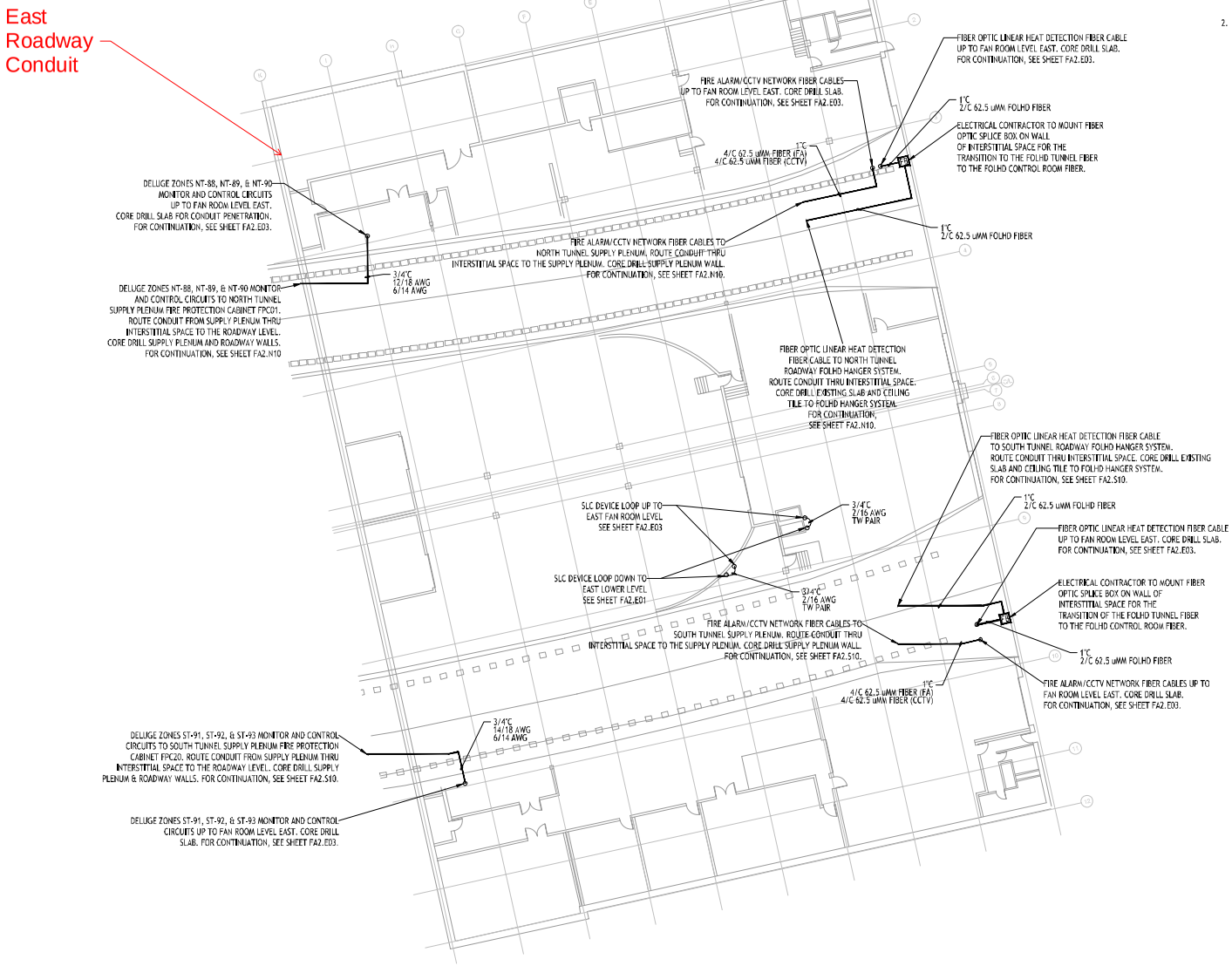

GENERAL NOTES:

1. IF FIELD CONDITIONS RESULT IN A CHANGE TO THE SHOP DRAWING INSTALLATION IN ANY WAY, CONTACT FAS SYSTEMS GROUP TO VERIFY PROPOSED CHANGES ARE COMPLIANT WITH NFPA 72 AND PROJECT REQUIREMENTS.
2. EACH CONTROL CABINET AND ADDRESSABLE DEVICE SHALL BEAR A TYPED LABEL INDICATING ITS ADDRESS OR DESIGNATION, WHICH CAN BE SEEN WITHOUT A LADDER OR LIFT. SMOKE AND HEAT DETECTORS SHALL HAVE THEIR LABEL ON ITS BASE.

BARNARD EJMT TEAM

BARNARD · RONDINELLI · ALF CONSULTING ENGINEERS · Eastern States Fire Protection Co. · BCER · Sturgeon Electric

EISENHOWER/JOHNSON MEMORIAL TUNNEL
FIXED FIRE SUPPRESSION SYSTEM
DESIGN BUILD PROJECT
Project No. C0703-360 Subaccount 17810
RFC DOCUMENTS - 2015-04-29

Revisions					
Num	Description	Date	DRAWN BY	CHECKED BY	AEE Jr
			B.T.L.		

FIRE ALARM: ROADWAY LEVEL EAST

Drawing Number

FA2.E02

IF THIS SHEET IS NOT 22"x34" IT IS NOT PLOTTED TO SCALE

GENERAL NOTES:

1. IF FIELD CONDITIONS RESULT IN A CHANGE TO THE SHOP DRAWING INSTALLATION IN ANY WAY, CONTACT FAS SYSTEMS GROUP TO VERIFY PROPOSED CHANGES ARE COMPLIANT WITH NFPA 72 AND PROJECT REQUIREMENTS.
2. EACH CONTROL CABINET AND ADDRESSABLE DEVICE SHALL BEAR A TYPED LABEL INDICATING ITS ADDRESS OR DESIGNATION, WHICH CAN BE SEEN WITHOUT A LADDER OR LIFT. SMOKE AND HEAT DETECTORS SHALL HAVE THEIR LABEL ON ITS BASE.

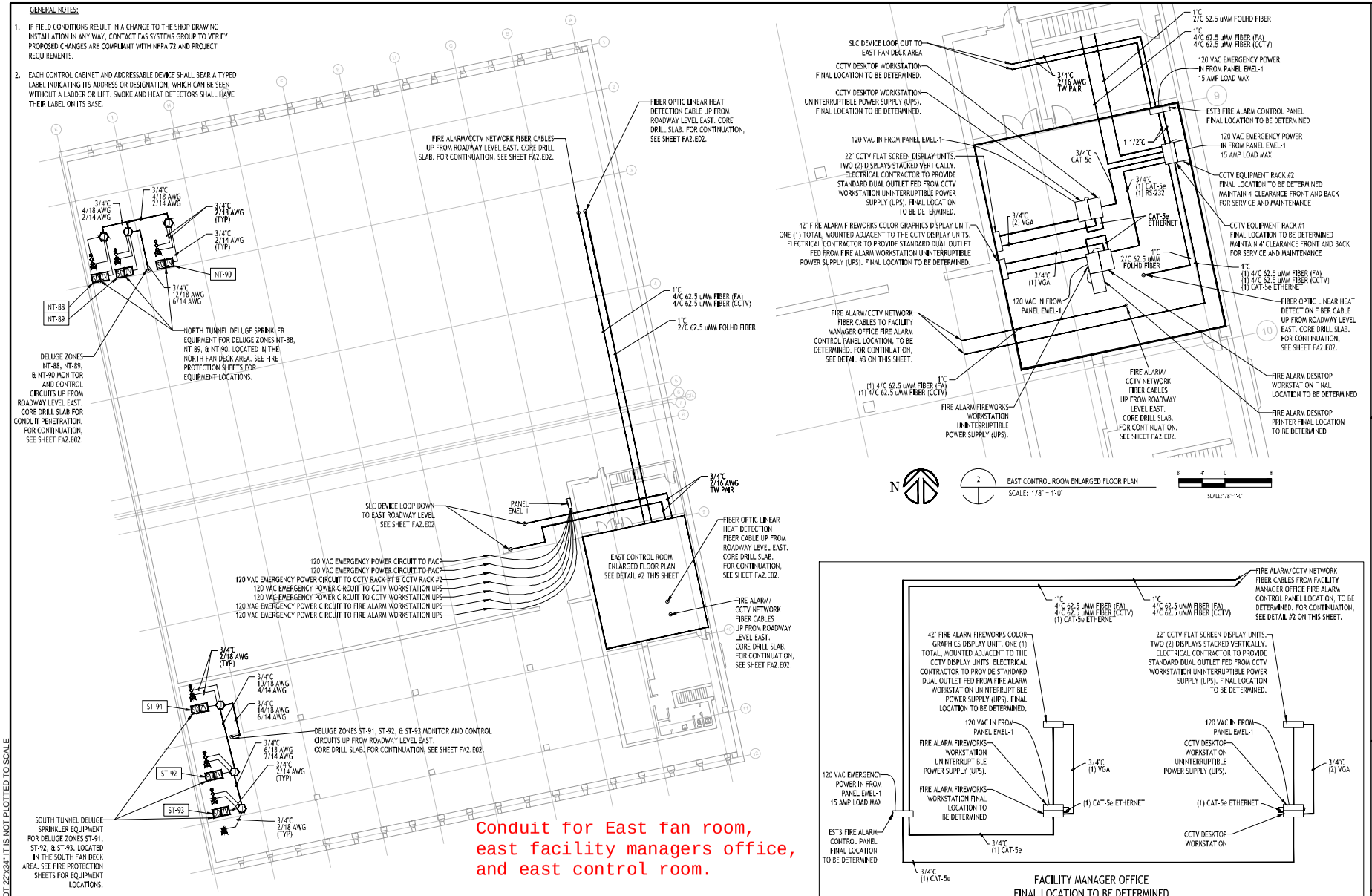

Conduit for East fan room, east facility managers office, and east control room.

IF THIS SHEET IS NOT 22"x34" IT IS NOT PLOTTED TO SCALE

BARNARD EJMT TEAM

BARNARD · RONDINELLI · BCER · Sturgeon Electric · Eastern States Fire Protection Co. · ELP Consulting Engineers

EISENHOWER/JOHNSON MEMORIAL TUNNEL
FIXED FIRE SUPPRESSION SYSTEM
DESIGN BUILD PROJECT
Project No. C0703-360 Subaccount 17810
RFC DOCUMENTS - 2015-04-29

Revisions					
Num	Description	Date	DRAWN BY	CHECKED BY	AEE Jr
			B.T.L.		

FIRE ALARM: FAN LEVEL EAST

Drawing Number
FA2.E03

Northwest Plenum Entrance Conduit

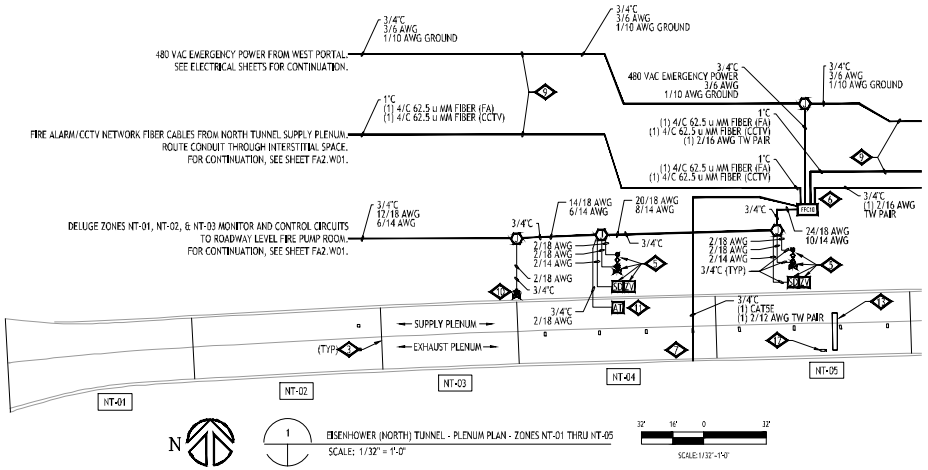

CONTINUED ON SHEET FA2.N02

BARNARD EJMT TEAM

BARNARD · RONDINELLI · ELF CONSULTING ENGINEERS · Eastern States Fire Protection Co. · BCER Engineering · Sturgeon Electric

EISENHOWER/JOHNSON MEMORIAL TUNNEL
FIXED FIRE SUPPRESSION SYSTEM
DESIGN BUILD PROJECT
Project No. C0703-360 Subaccount 17810

RFC DOCUMENTS - 2015-04-29

Revisions				
Num	Description	Date	DRAWN BY: B.T.L.	CHECKED BY: A.E.J.

FIRE ALARM:
EISENHOWER TUNNEL
FP ZONES NT-01 TO NT-05

Drawing Number

FA2.N01

IF THIS SHEET IS NOT 22"x34" IT IS NOT PLOTTED TO SCALE

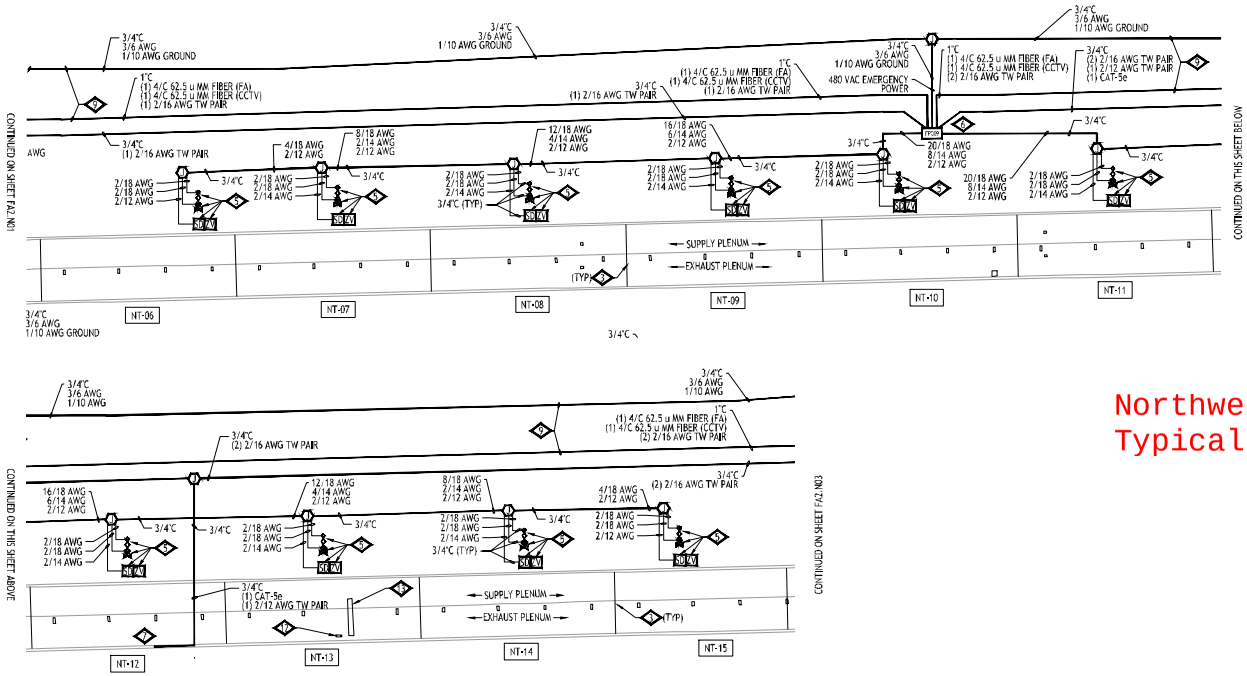

Northwest Plenum Conduit-Typical

N

2 EISENHOWER (NORTH) TUNNEL • ROADWAY SECTIONAL ELEVATION PLAN • SOUTH VIEW • ZONES NT-06 THRU NT-15

SCALE: 1/32" = 1'-0"

SCALE:1/32"=1'-0"

IF THIS SHEET IS NOT 22"x34" IT IS NOT PLOTTED TO SCALE

BARNARD EJMT TEAM

BARNARD · RONDINELLI · BCER · Sturgeon Electric · Eastern States Fire Protection Co. · ELP Consulting Engineers

EISENHOWER/JOHNSON MEMORIAL TUNNEL
FIXED FIRE SUPPRESSION SYSTEM
DESIGN BUILD PROJECT
Project No. C0703-360 Subaccount 17810

RFC DOCUMENTS - 2015-04-29

Revisions				
Num	Description	Date	DRAWN BY	B.T.L.
			CHECKED BY	AEE Jr.

FIRE ALARM:
EISENHOWER TUNNEL
FP ZONES NT-06 TO NT-15

Drawing Number

FA2.N02

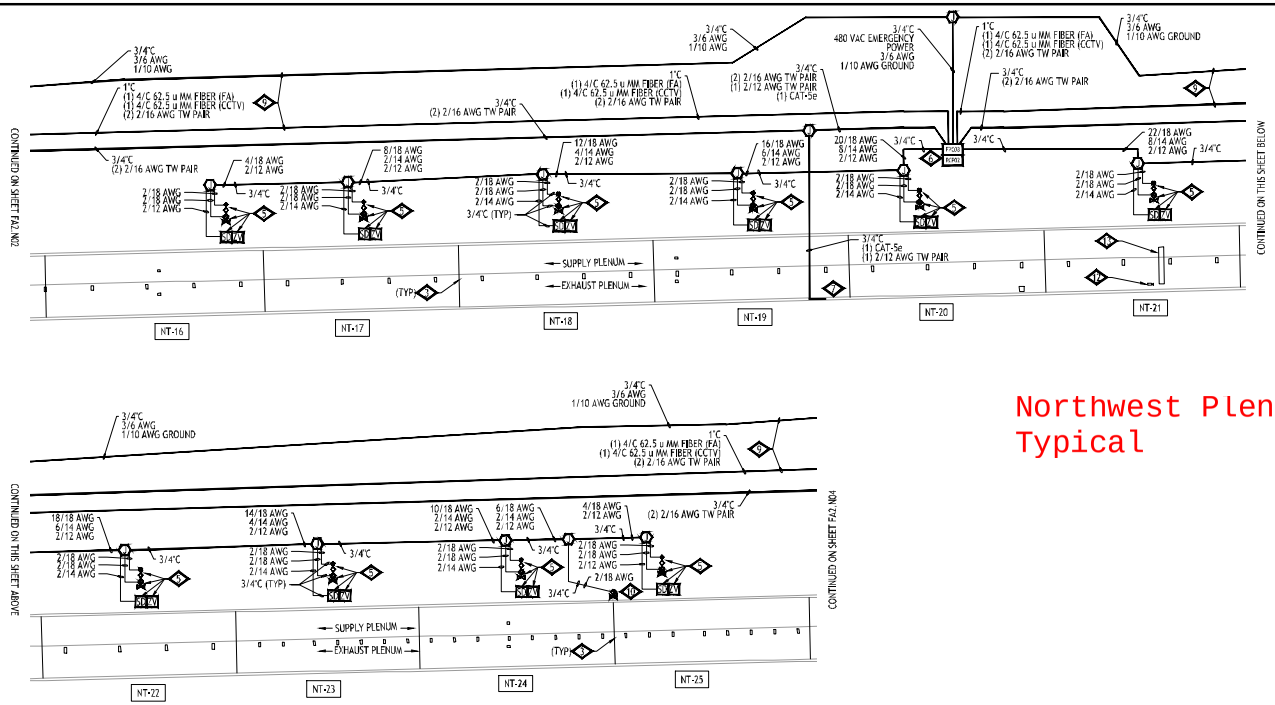

Northwest Plenum Conduit-Typical

BARNARD EJMT TEAM

BOER Engineering · BARNARD · RONDINELLI · Sturgeon ELECTRIC · Western States Fire Protection Co. · CONSULTING ENGINEERS

EISENHOWER/JOHNSON MEMORIAL TUNNEL
FIXED FIRE SUPPRESSION SYSTEM
DESIGN BUILD PROJECT
Project No. C0703-360 Subaccount 17810
RFC DOCUMENTS - 2015-04-29

Revisions
Num | Description | Date

DRAWN BY: B.T.L. CHECKED BY: AEE.Jr

FIRE ALARM:
EISENHOWER TUNNEL
FP ZONES NT-16 TO NT-25

Drawing Number
FA2.N03

IF THIS SHEET IS NOT 22"X34" IT IS NOT PLOTTED TO SCALE

Northeast Plenum Conduit-Entrance

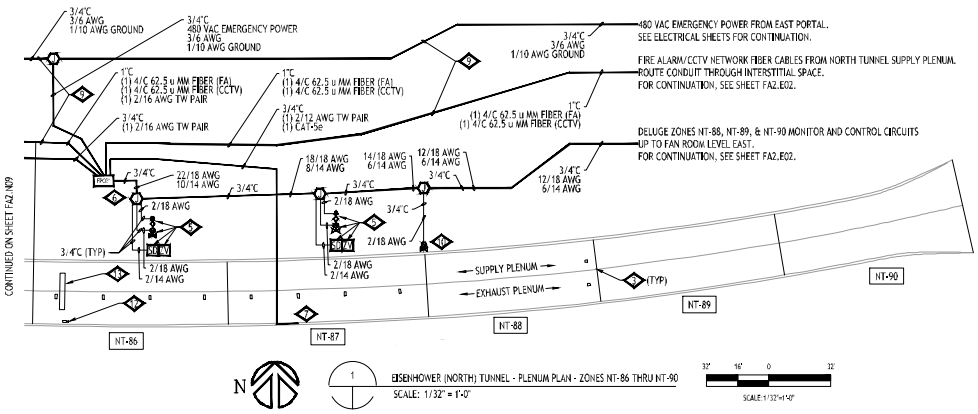

BARNARD EJMT TEAM

BARNARD · RONDINELLI · ELP CONSULTING ENGINEERS · Eastern States Fire Protection Co. · BCER Engineering · Sturgeon Electric

EISENHOWER/JOHNSON MEMORIAL TUNNEL
FIXED FIRE SUPPRESSION SYSTEM
DESIGN BUILD PROJECT
Project No. C0703-360 Subaccount 17810

RFC DOCUMENTS - 2015-04-29

Revisions				DRAWN BY	B.T.L.	CHECKED BY	AEE Jr.
Num	Description	Date					

FIRE ALARM:
EISENHOWER TUNNEL
FP ZONES NT-86 TO NT-90

Drawing Number

FA2.N10

IF THIS SHEET IS NOT 22"x34" IT IS NOT PLOTTED TO SCALE

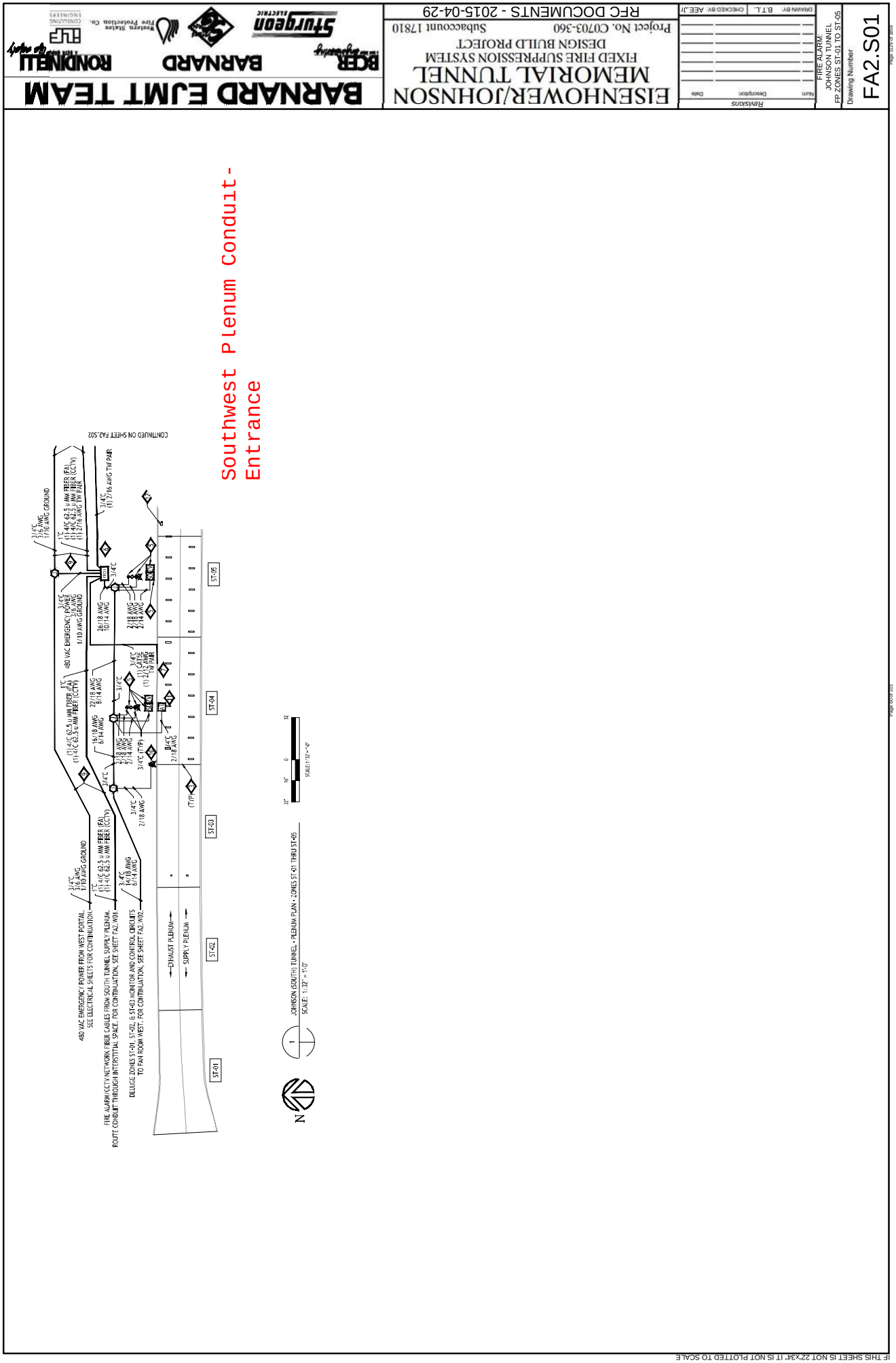
BARNARD EJMT TEAM
EISENHOWER/JOHNSON MEMORIAL TUNNEL
FIXED FIRE SUPPRESSION SYSTEM
DESIGN BUILD PROJECT
Project No. C0703-360
Subaccount 17810
RFC DOCUMENTS - 2015-04-29
FIRE ALARM:
JOHNSON TUNNEL
FP ZONES ST-01 TO ST-05
Drawing Number
FA2.S01
Southwest Plenum Conduit-Entrance
CONTINUED ON SHEET FA2.S02
480 VAC EMERGENCY POWER FROM WEST PORTAL. SEE ELECTRICAL SHEETS FOR CONTINUATION.
FIRE ALARM/CCTV NETWORK FIBER CABLES FROM SOUTH TUNNEL SUPPLY PLENUM. ROUTE CONDUIT THROUGH INTERSTITIAL SPACE. FOR CONTINUATION, SEE SHEET FA2.W01.
DELUGE ZONES ST-01, ST-02, & ST-03 MONITOR AND CONTROL CIRCUITS TO FAN ROOM WEST. FOR CONTINUATION, SEE SHEET FA2.W02.
EXHAUST PLENUM
SUPPLY PLENUM
ST-01
ST-02
ST-03
ST-04
ST-05
JOHNSON (SOUTH) TUNNEL - PLENUM PLAN - ZONES ST-01 THRU ST-05
SCALE: 1/32" = 1'-0"
SCALE: 1/32" = 1'-0"
IF THIS SHEET IS NOT 22"X34" IT IS NOT PLOTTED TO SCALE

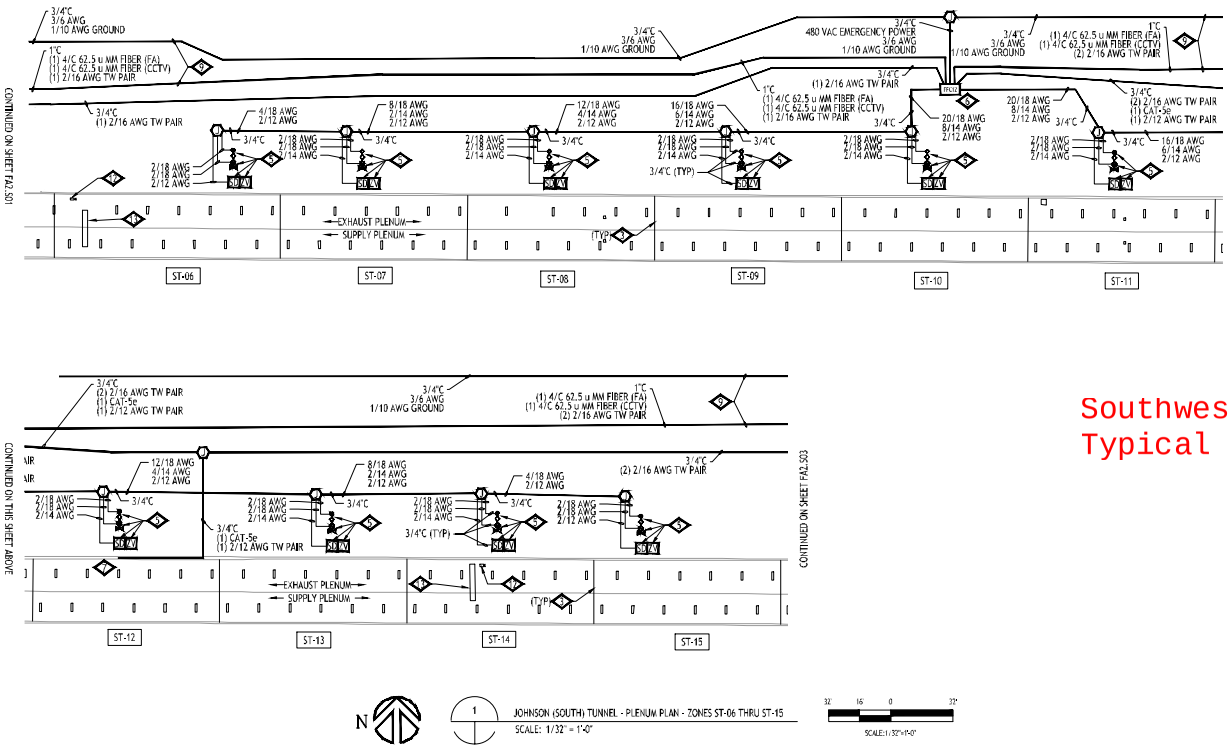

Southwest Plenum Conduit-Typical

N

1 JOHNSON (SOUTH) TUNNEL - PLENUM PLAN - ZONES ST-06 THRU ST-15
SCALE: 1/32" = 1'-0"

SCALE: 1: 32"=1'-0"

BARNARD EJMT TEAM

BARNARD · RONDINELLI · ELP CONSULTING ENGINEERS · Western States Fire Protection Co. · BCER Engineering · Sturgeon Electric

EISENHOWER/JOHNSON MEMORIAL TUNNEL
FIXED FIRE SUPPRESSION SYSTEM
DESIGN BUILD PROJECT
Project No. C0703-360 Subaccount 17810
RFC DOCUMENTS - 2015-04-29

Revisions				
Num	Description	Date	DRAWN BY	B.T.L.
			CHECKED BY	AEE Jr

FIRE ALARM:
JOHNSON TUNNEL
FP ZONES ST-06 TO ST-15

Drawing Number
FA2.S02

IF THIS SHEET IS NOT 22"x34" IT IS NOT PLOTTED TO SCALE

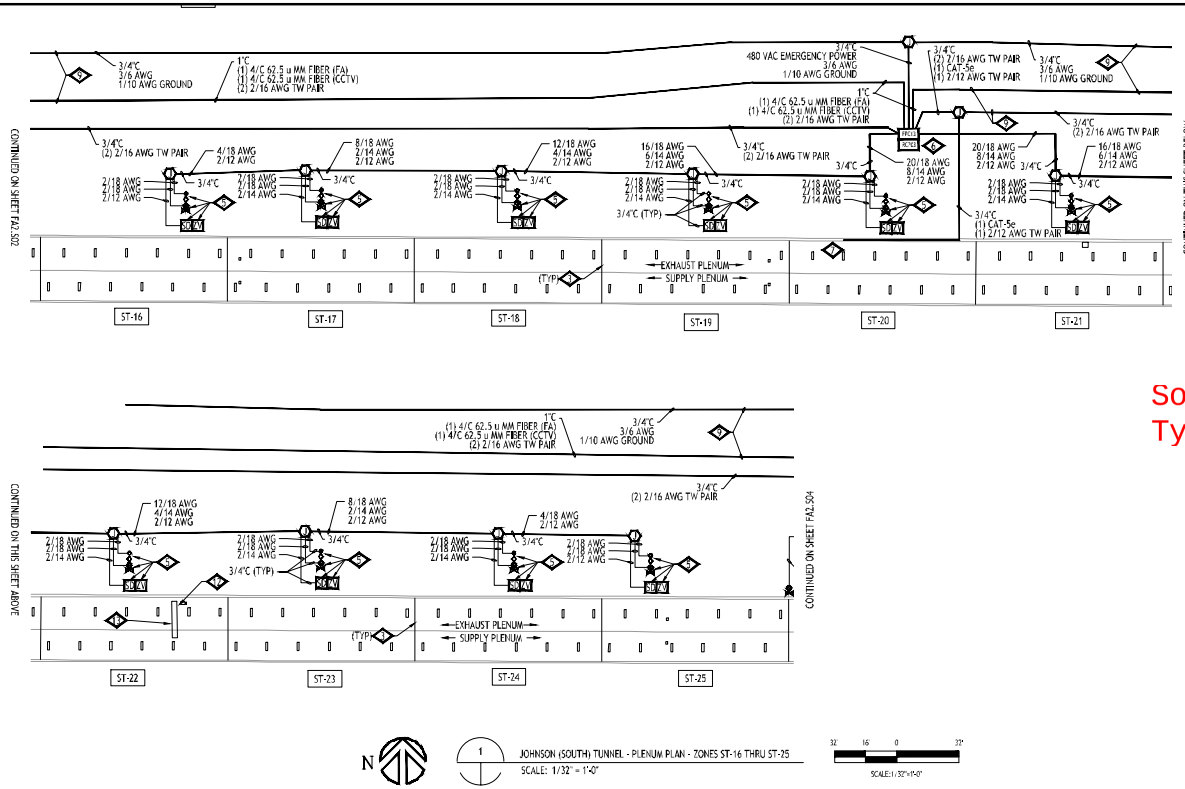

Southeast Plenum Conduit-Typical

N

1 JOHNSON (SOUTH) TUNNEL - PLENUM PLAN - ZONES ST-16 THRU ST-25
SCALE: 1/32" = 1'-0"

32' 16' 0 32'
SCALE: 1/32"=1'-0"

IF THIS SHEET IS NOT 22"x34" IT IS NOT PLOTTED TO SCALE

BARNARD EJMT TEAM

BARNARD · RONDINELLI · ELP CONSULTING ENGINEERS · Eastern States Fire Protection Co. · BCER Engineering · Sturgeon Electric

EISENHOWER/JOHNSON MEMORIAL TUNNEL
FIXED FIRE SUPPRESSION SYSTEM
DESIGN BUILD PROJECT
Project No. C0703-360 Subaccount 17810

RFC DOCUMENTS - 2015-04-29

Revisions					
Num	Description	Date	DRAWN BY	B.T.L.	CHECKED BY AEE.Jr

FIRE ALARM:
JOHNSON TUNNEL
FP ZONES ST-16 TO ST-25

Drawing Number

FA2.S03

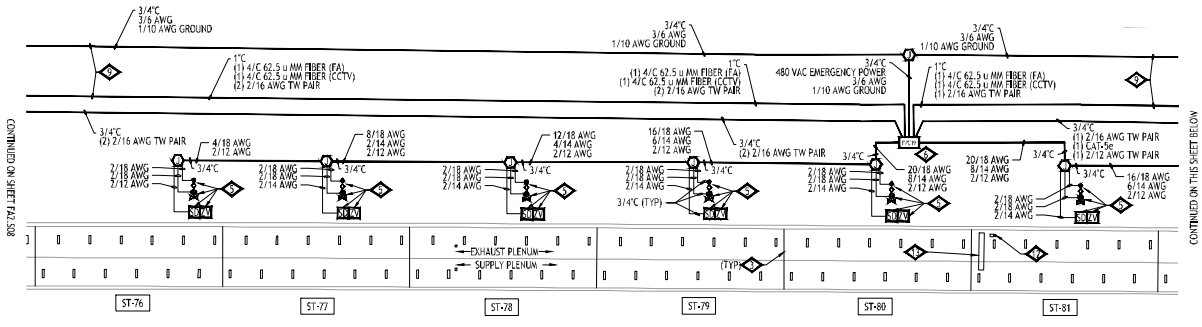

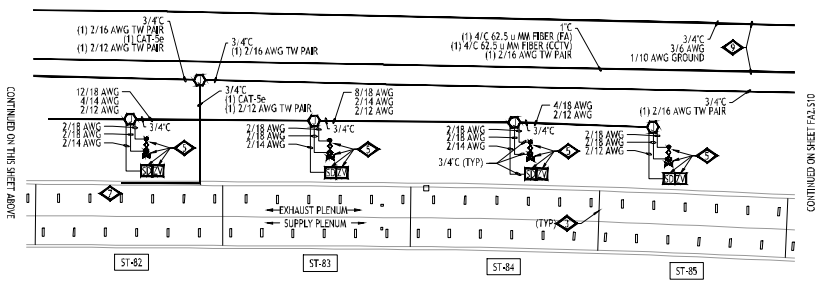

Southeast Plenum Conduit-Typical

BARNARD EJMT TEAM

BARNARD · RONDINELLI · ALF CONSULTING ENGINEERS · Eastern States Fire Protection Co. · BCER Engineering · Sturgeon Electric

EISENHOWER/JOHNSON MEMORIAL TUNNEL
FIXED FIRE SUPPRESSION SYSTEM
DESIGN BUILD PROJECT
Project No. C0703-360 Subaccount 17810
RFC DOCUMENTS - 2015-04-29

Revisions				
Num	Description	Date	DRAWN BY: B.T.L.	CHECKED BY: AEE Jr

FIRE ALARM:
JOHNSON TUNNEL
FP ZONES ST-76 TO ST-85

Drawing Number
FA2.S09

IF THIS SHEET IS NOT 22"x34" IT IS NOT PLOTTED TO SCALE

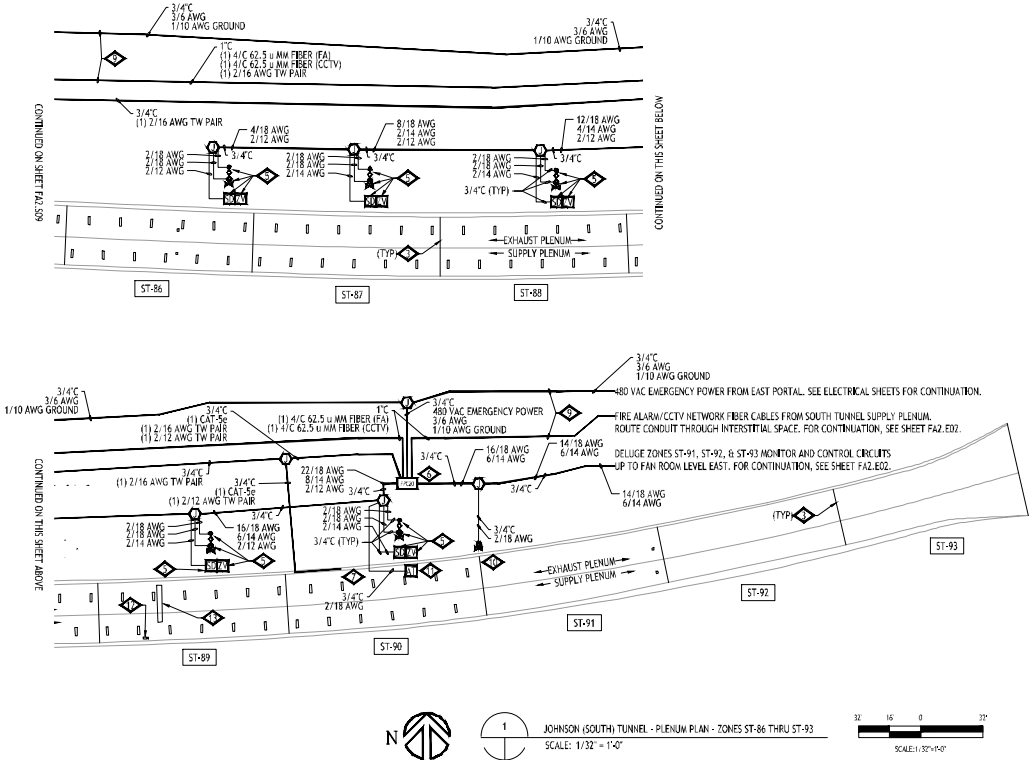

Southeast Plenum Conduit-Enterance

IF THIS SHEET IS NOT 22"x34" IT IS NOT PLOTTED TO SCALE

BARNARD EJMT TEAM

BARNARD · RONDINELLI · ELP CONSULTING ENGINEERS · Eastern States Fire Protection Co. · BCER Engineering · Sturgeon Electric

EISENHOWER/JOHNSON MEMORIAL TUNNEL
FIXED FIRE SUPPRESSION SYSTEM
DESIGN BUILD PROJECT
Project No. C0703-360 Subaccount 17810

RFC DOCUMENTS - 2015-04-29

Revisions				
Num	Description	Date	DRAWN BY	B.T.L.
			CHECKED BY	AEE Jr

FIRE ALARM:
JOHNSON TUNNEL
FP ZONES ST-86 TO ST-93

Drawing Number

FA2.S10

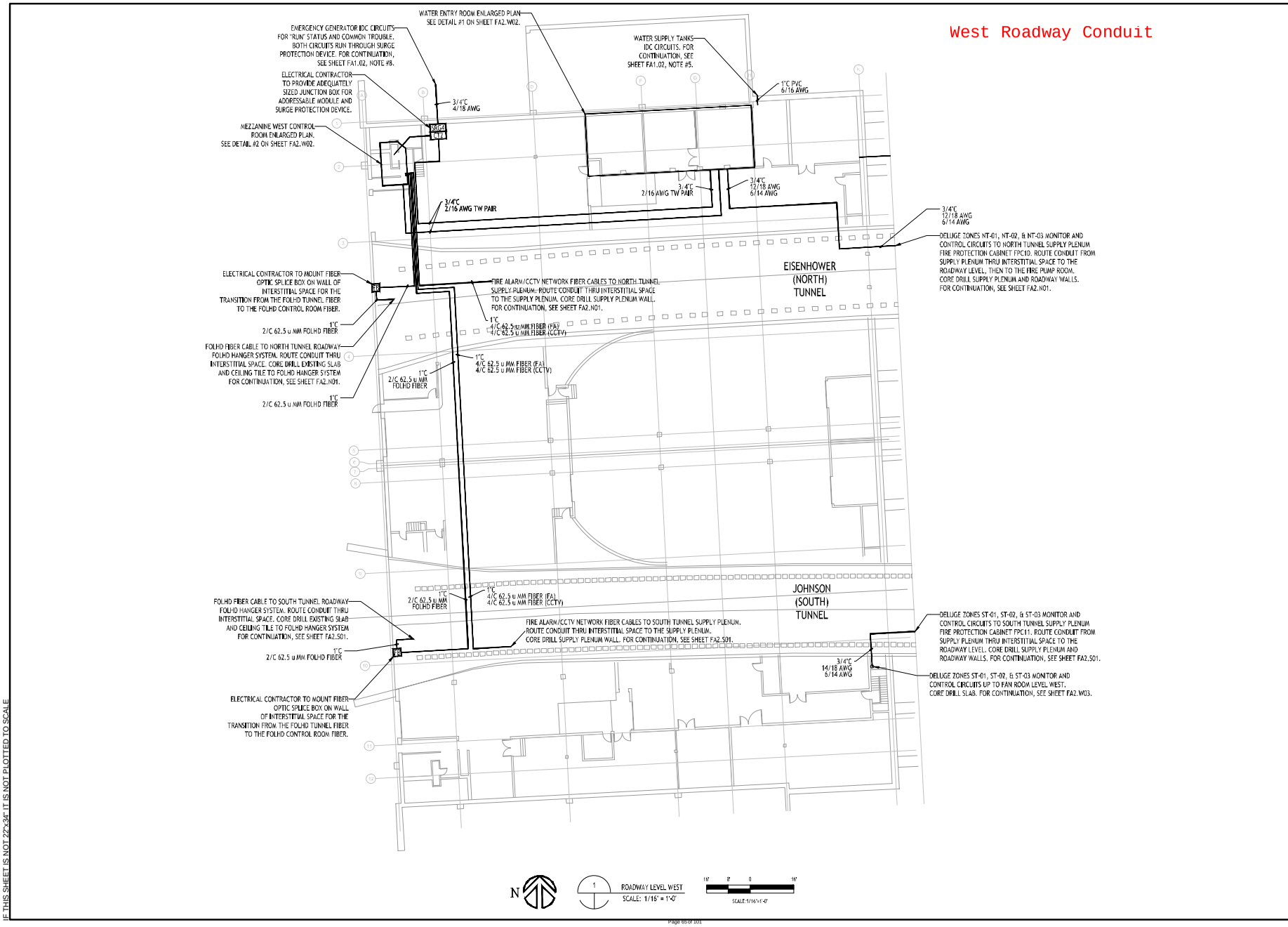

IF THIS SHEET IS NOT 22"x34" IT IS NOT PLOTTED TO SCALE

BARNARD EJMT TEAM

BCER Engineering · BARNARD · RONDINELLI · Sturgeon Electric · Western States Fire Protection Co. · ALF Consulting Engineers

EISENHOWER/JOHNSON MEMORIAL TUNNEL

FIXED FIRE SUPPRESSION SYSTEM
DESIGN BUILD PROJECT

Project No. C0703-360 Subaccount 17810

RFC DOCUMENTS - 2015-04-29

Revisions

Num	Description	Date

DRAWN BY: B.T.L. CHECKED BY: AEE,Jr

FIRE ALARM: ROADWAY LEVEL WEST

Drawing Number

FA2.W01

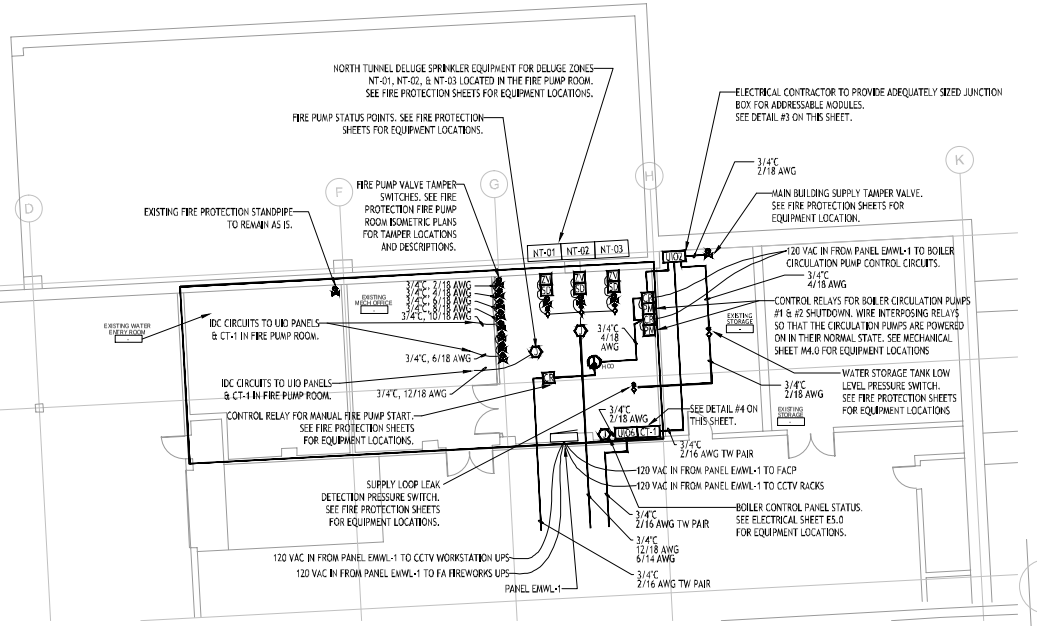

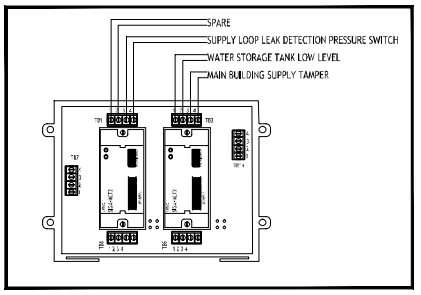

West side mechanical room and mezzanine room conduit

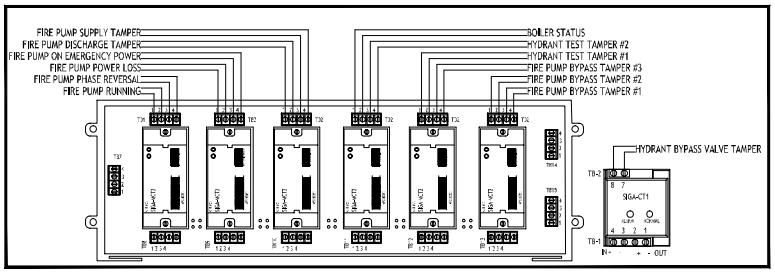

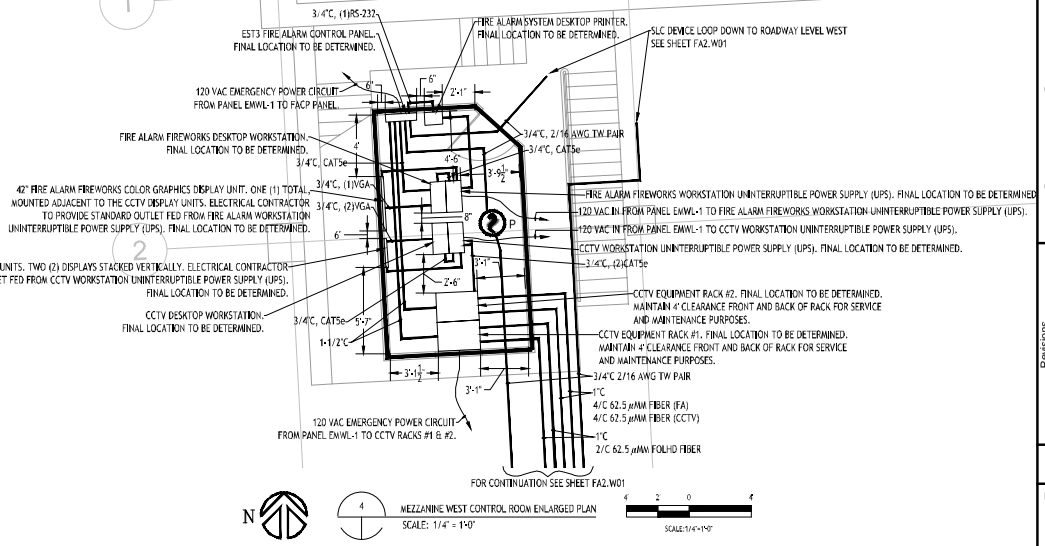

BARNARD EJMT TEAM

BARNARD · RONDINELLI · ELP CONSULTING ENGINEERS · Eastern States Fire Protection Co. · BCER Engineering · Sturgeon Electric

EISENHOWER/JOHNSON MEMORIAL TUNNEL
FIXED FIRE SUPPRESSION SYSTEM
DESIGN BUILD PROJECT
Project No. C0703-360 Subaccount 17810
RFC DOCUMENTS - 2015-04-29

Revisions				
Num	Description	Date		
			DRAWN BY	B.T.L.
			CHECKED BY	AEE Jr.

FIRE ALARM: ROADWAY LEVEL WEST

Drawing Number
FA2.W02

IF THIS SHEET IS NOT 22"x34" IT IS NOT PLOTTED TO SCALE

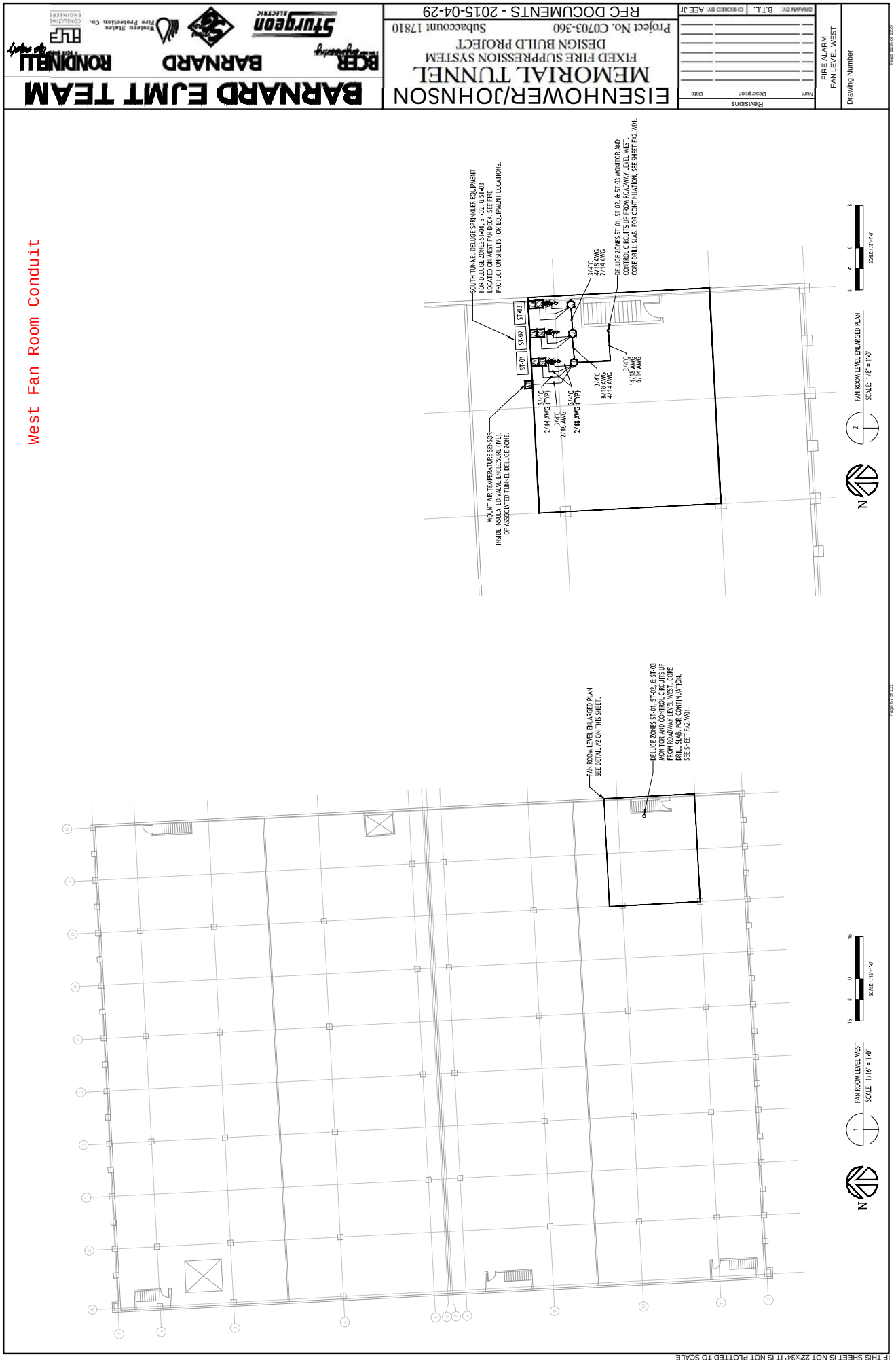

BARNARD EJMT TEAM
BCER
BARNARD
RONDINELLI
Sturgeon ELECTRIC
Western States Fire Protection Co.
CONSULTING ENGINEERS
EISENHOWER/JOHNSON
MEMORIAL TUNNEL
FIXED FIRE SUPPRESSION SYSTEM
DESIGN BUILD PROJECT
Project No. C0703-360
Subaccount 17810
RFC DOCUMENTS - 2015-04-29
Revisions
Num
Description
Date
DRAWN BY: B.T.L.
CHECKED BY: AEE,JR
FIRE ALARM:
FAN LEVEL WEST
Drawing Number
West Fan Room Conduit
SOUTH TUNNEL DELUGE SPRINKLER EQUIPMENT FOR DELUGE ZONES ST-01, ST-02, & ST-03 LOCATED ON WEST FAN DECK. SEE FIRE PROTECTION SHEETS FOR EQUIPMENT LOCATIONS.
DELUGE ZONES ST-01, ST-02, & ST-03 MONITOR AND CONTROL CIRCUITS UP FROM ROADWAY LEVEL WEST. CORE DRILL SLAB. FOR CONTINUATION, SEE SHEET FA2.W01.
MOUNT AIR TEMPERATURE SENSOR INSIDE INSULATED VALVE ENCLOSURE (NE), OF ASSOCIATED TUNNEL DELUGE ZONE.
ST-01
ST-02
ST-03
3/4"C 2/14 AWG (TYP)
3/4"C 2/18 AWG
3/4"C 2/18 AWG (TYP)
3/4"C 8/18 AWG 4/14 AWG
3/4"C 14/18 AWG 6/14 AWG
3/4"C 4/18 AWG 2/14 AWG
FAN ROOM LEVEL ENLARGED PLAN
SCALE: 1/8" = 1'-0"
FAN ROOM LEVEL ENLARGED PLAN SEE DETAIL #2 ON THIS SHEET.
DELUGE ZONES ST-01, ST-02, & ST-03 MONITOR AND CONTROL CIRCUITS UP FROM ROADWAY LEVEL WEST. CORE DRILL SLAB. FOR CONTINUATION, SEE SHEET FA2.W01.
FAN ROOM LEVEL WEST
SCALE: 1/16" = 1'-0"
IF THIS SHEET IS NOT 22"x34" IT IS NOT PLOTTED TO SCALE

Sturgeon ELECTRIC
12150 E 112TH AVE, HENDERSON, CO 80640

MYR GROUP

DRAINAGE CONDUIT

PREPARED BY: **Jason Willis**
CELL PHONE: **(303) 944-1190**
FAX: **(303) 227-6978**
OFFICE: **303-286-8000**
EMAIL: **JWillis@myrgroup.com**

Sturgeon Electric Company, Inc.
12150 East 112th Avenue
Henderson, CO 80640
303-286-8000

East Side Drainage Tank Conduit-

New drainage tanks have been installed on the east side of the tunnel to collect the water discharged from the fire suppression system. In order to monitor the water level of these tanks level sensors have been installed. These sensors are connected to the tank high level IDC circuit via 2/16 awg wire installed in 1" PVC underground conduit.

Water released during a fire event will be collected in existing and the new collection tanks. New valves have been installed in the existing sewer treatment room and new manhole 2 to divert water into these tanks. These valves will be controlled by the fire protection system. Finally, as part of the fire suppression project, a new level sensor has been installed in the collection tank system and monitored by the fire alarm system.

The conduit and wire provided by the electrical contractor is intended to last the 30 life of the system with no maintenance or operations requirements. If this material does need to be replaced the wire will have to be pulled from the conduit between pull points and the PVC conduit dug up and removed.

The operations and maintenance training of the sensors themselves or the drainage control system is to be provided by others.

Areas of Concern:

The underground conduit system should not require any maintenance over the 30 year life of the project. However, there is a risk that future projects that require trench work may run into the newly supplied conduit. This risk can be prevented by maintaining a record of up to date as built drawings which will be provided at the completion of the project.

Schedule 80 PVC Rigid Nonmetallic Conduit (RNC)

(Extra Heavy Wall EPC-80)

ETL Listed to UL 651 in compliance to the NEC

UL LISTED E35297

RUS Listed

Listed for use in aboveground and belowground applications that are subject to physical damage.

- Sunlight resistant
- Rated for use with 90˚C conductors
- Superior weathering characteristics
- For use in areas subject to physical damage

With Integral Bell*

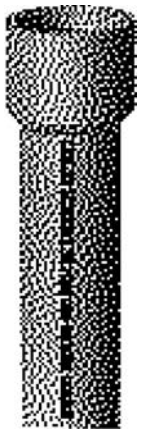

Schedule 80 Extra Heavy Wall

Part No. 10'	Part No. 20'	Nom. Size	Std. Crate Qty. 10'	Std. Crate Qty. 20'	Wt. Per 100'	Dimensions O.D.	Dimensions I.D.	Wall
49405-010	49405-020	1/2"	6000'	12000'	21	.840	.546	.147
49407-010	49407-020	3/4"	4400'	8000'	30	1.050	.742	.154
49408-010	49408-020	1"	3600'	7200'	44	1.315	.957	.179
49409-010	49409-020	1 1/4"	3300'	6600'	60	1.660	1.278	.191
49410-010	49410-020	1 1/2"	2250'	3600'	72	1.900	1.500	.200
49411-010	49411-020	2"	1400'	2800'	101	2.375	1.939	.218
49412-010	49412-020	2 1/2"	930'	1880	154	2.875	2.323	.276
49413-010	49413-020	3"	880'	1760'	210	3.500	2.900	.300
49415-010	49415-020	4"	570'	1140'	308	4.500	3.826	.337
49416-010	–	5"	380'	–	428	5.563	4.813	.375
49417-010	49417-020	6"	260'	520'	588	6.625	5.761	4.32

Rigid nonmetallic conduit is normally supplied in standard 10' lengths, with one belled end per length. For specific requirements, it may be produced in lengths shorter or longer than 10', with or without belled ends.

Use RNC Fittings with Schedule 40 and Schedule 80 Conduit.

Notes: 1. Special fittings and conduit sizes will be quoted on request.
2. DON'T FORGET TO ORDER CEMENT.
3. Carlon reserves the right to ship to the nearest unitized quantity.

Support of Carlon Rigid Nonmetallic Conduit in Aboveground Installations

Table 352.30(B) NEC shows the support requirements for Schedule 40 and Schedule 80 rigid PVC nonmetallic conduit.

Plastic conduit should always be installed away from steam lines, etc. Support straps should allow for lineal movement caused by expansion and contraction.

Maximum ambient temperature is 122°F (50°C).

Table 352.30(B), NEC

Trade Size	Maximum Spacing Between Supports (feet)
1/2 - 1	3
1 1/4 - 2	5
2 1/2 - 3	6
3 1/2 - 5	7
6	8

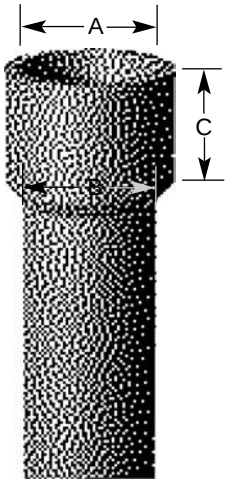

Acceptable Dimensions in Inches of Integral Bell per UL 651

Trade Size	A At Entrance (in.) Maximum	A At Entrance (in.) Minimum	B At Bottom (in.) Maximum	B At Bottom (in.) Minimum	C Nominal Bell Depth (in.)
1/2	0.860	0.844	0.844	0.828	1.375
3/4	1.074	1.054	1.056	1.036	1.500
1	1.340	1.320	1.320	1.300	1.750
1 1/4	1.689	1.665	1.667	1.643	1.875
1 1/2	1.930	1.906	1.906	1.882	2.750
2	2.405	2.381	2.381	2.357	3.250
2 1/2	2.905	2.875	2.883	2.853	3.250
3	3.530	3.500	3.507	3.477	3.875
3 1/2	4.065	3.965	4.007	3.977	3.875
4	4.565	4.465	4.506	4.476	4.625
5	5.643	5.543	5.583	5.523	5.625
6	6.708	6.608	6.644	6.584	6.375

OPTIONAL PENTAHEAD SOCKET-EQUIPPED LIFTING TOOL

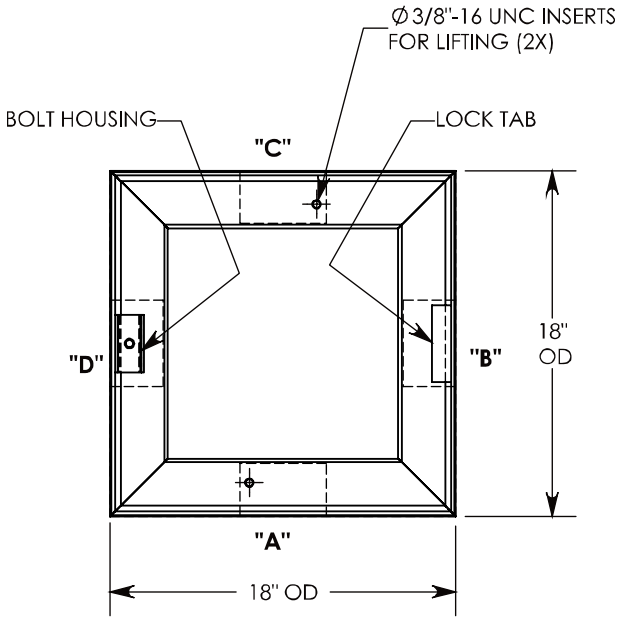

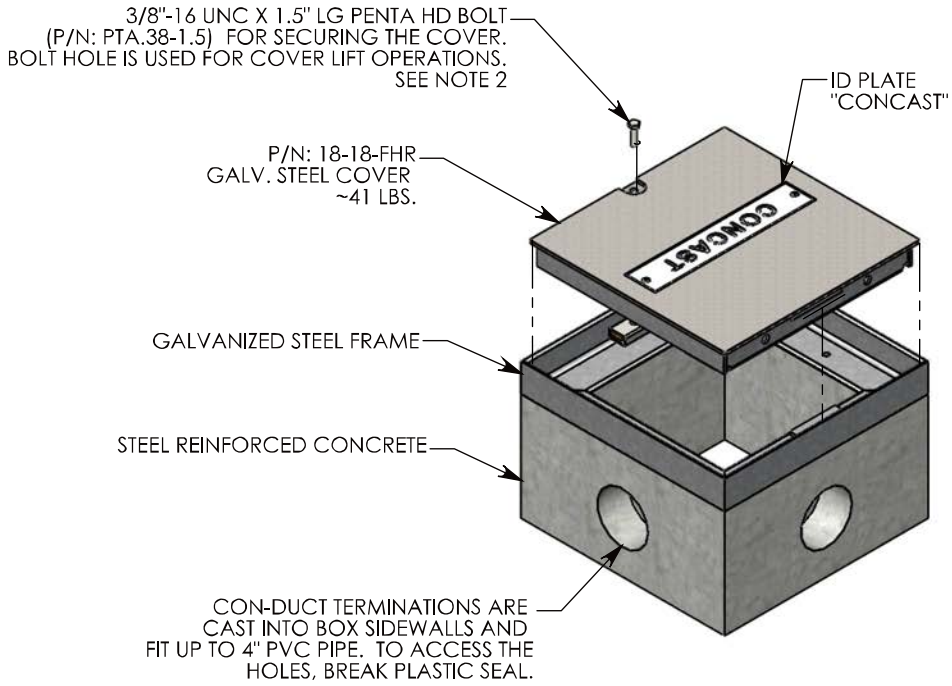

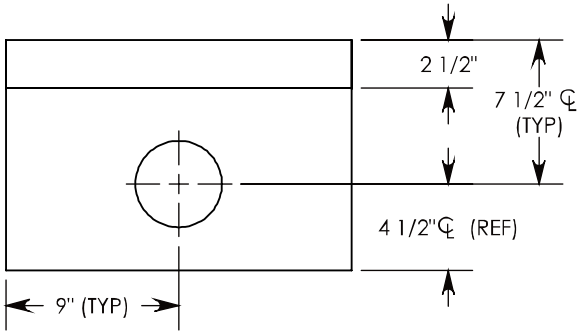

SIDE "A" HLR

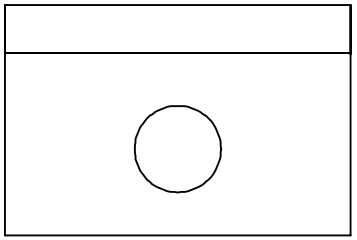

SIDE "B" (HLR)

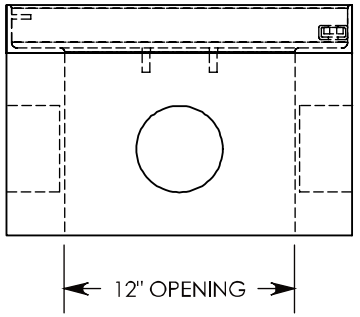

SIDE "C"

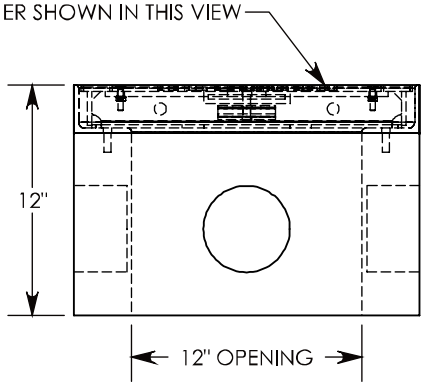

SIDE "D"

NOTE 1: FOR PVC SIZES SMALLER THAN 4", USE CONCAST RC41(REDUCING COUPLER).
NOTE 2: FOR ADDED SECURITY, REPLACE PENTAHEAD BOLTS WITH SURELOCK BOLTS AND ORDER UNDER P/N: FHRSL-18-18-12

H20 RATED - 32,000 LB. PER AXLE LOAD.

DRAWN BY: ROBIN FLINT		CONCAST 1010 NORTH STAR DRIVE P.O. BOX 69 ZUMBROTA, MN 55992-0069	**DESCRIPTION:** HEAVY TRAFFIC HANDHOLE
DATE: 8/26/2013	**REVISION LEVEL:** 0		DIMENSIONS ARE IN INCHES TOLERANCES: FRACTIONAL: ± 1/8" ANGULAR: ± 2°
WEIGHT: 190 LBS. W/COVER	**MATERIAL:** NOTED		CONTACT INFORMATION: EMAIL: INFO@CONCASTINC.COM PHONE: (507) 732-4095 FAX: (507) 732-4094
			SHEET 1 OF 1
			PART NUMBER: FHR-18-18-12

East Side Underground Conduit Feeding Drainage Tank Sensors

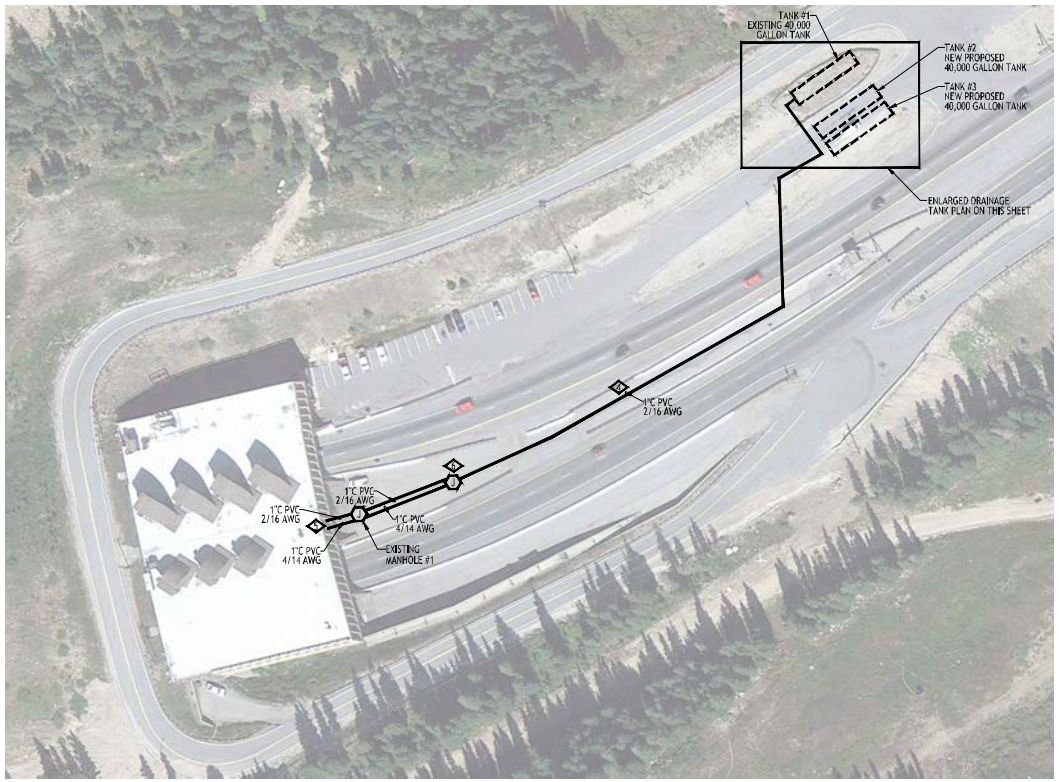

N

1 FIRE ALARM - SITE PLAN - EAST
SCALE: 1/64" = 1'-0"

64' 32' 0 64'
SCALE: 1/64" = 1'-0"

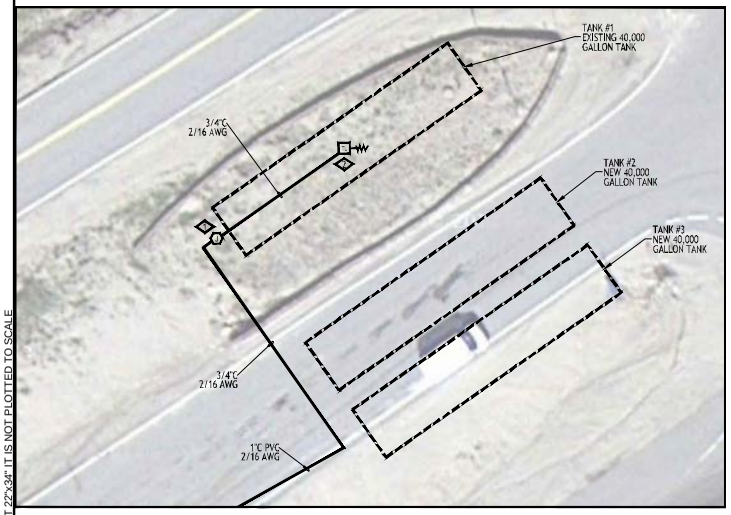

N

2 ENLARGED DRAINAGE TANK PLAN
SCALE: 1/16" = 1'-0"

16' 8' 0 16'
SCALE: 1/16" = 1'-0"

IF THIS SHEET IS NOT 22"x34" IT IS NOT PLOTTED TO SCALE

BARNARD EJMT TEAM

BARNARD · RONDINELLI · ELP CONSULTING ENGINEERS · Eastern States Fire Protection Co. · BCER Engineering · Sturgeon Electric

EISENHOWER/JOHNSON MEMORIAL TUNNEL
FIXED FIRE SUPPRESSION SYSTEM
DESIGN BUILD PROJECT
Project No. C0703-360 Subaccount 17810
RFC DOCUMENTS - 2015-04-29

Revisions				
Num	Description	Date		
			DRAWN BY	B.T.L.
			CHECKED BY	AEE Jr

FIRE ALARM:
SITE PLAN - EAST

Drawing Number
FA1.01

East Side Drainage Circuits

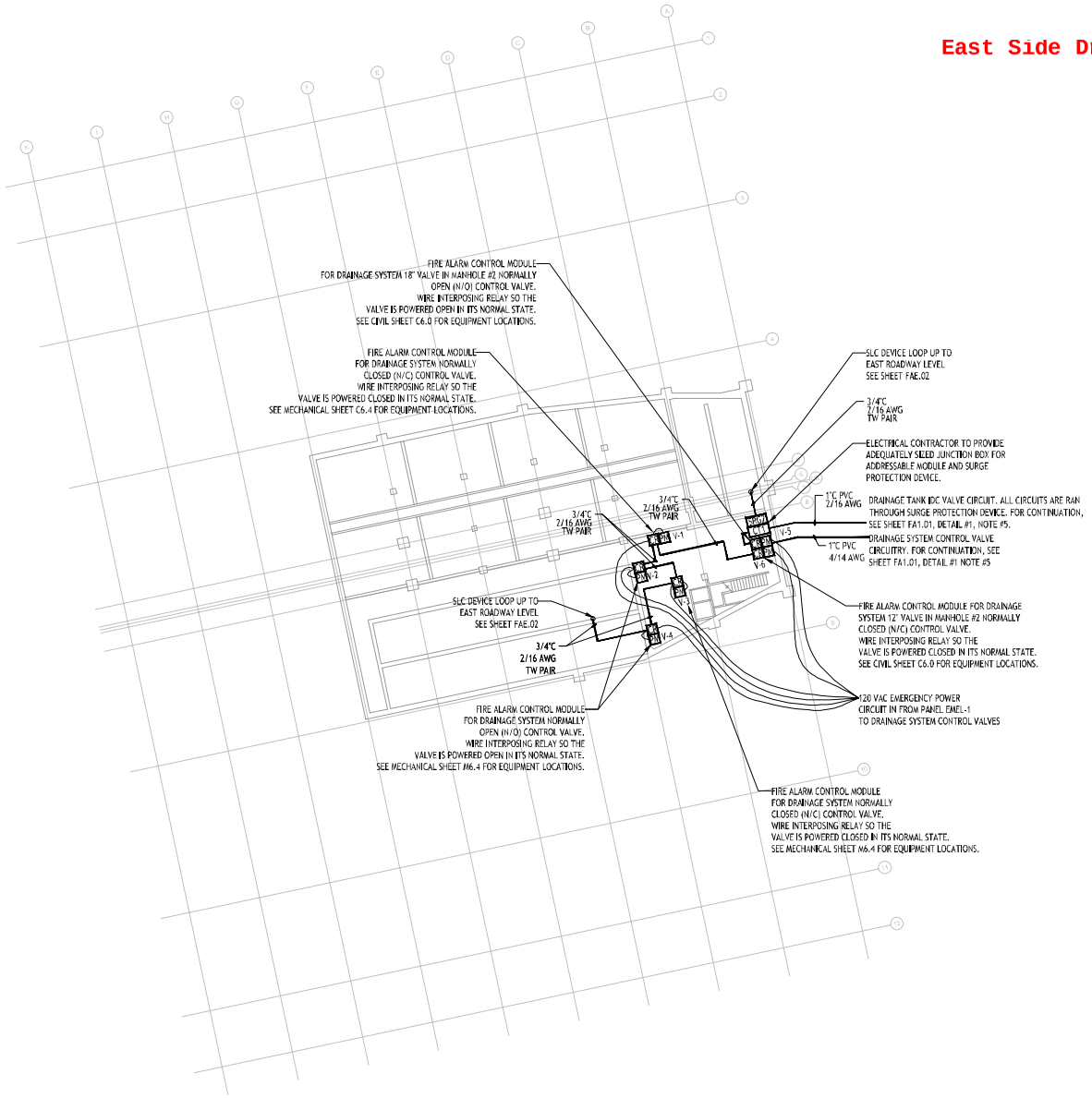

N

1 LOWER LEVEL EAST
SCALE: 1/16" = 1'-0"

16' 8' 0 16'
SCALE: 1/16"=1'-0"

BARNARD EJMT TEAM

BOER Engineering · BARNARD · RONDINELLI · Sturgeon ELECTRIC · Western States Fire Protection Co. · ALF CONSULTING ENGINEERS

EISENHOWER/JOHNSON MEMORIAL TUNNEL
FIXED FIRE SUPPRESSION SYSTEM
DESIGN BUILD PROJECT
Project No. C0703-360 Subaccount 17810
RFC DOCUMENTS - 2015-04-29

Revisions
Num | Description | Date

DRAWN BY: B.T.L. CHECKED BY: AEE,Jr

FIRE ALARM:
LOWER LEVEL EAST

Drawing Number
FA2.E01

IF THIS SHEET IS NOT 22"x34" IT IS NOT PLOTTED TO SCALE

Sturgeon ELECTRIC
12150 E 112TH AVE, HENDERSON, CO 80640

MYR GROUP

FPC/RCP PANELS

PREPARED BY: Jason Willis
CELL PHONE: (303) 944-1190
FAX: (303) 227-6978
OFFICE: 303-286-8000
EMAIL: JWillis@myrgroup.com

FPC/RCP Panels-

Fire alarm system panels are interconnected by a class "A" fiber optic network, with main FACP panels installed in the East and West control rooms. There are four (4) remote control panels located in the supply plenums of the tunnels, which allow for monitoring and control of all the sprinkler system deluge equipment installed in the tunnels. There are also 20 fire protection cabinets that have been installed in the supply plenums where the deluge sprinkler releasing modules and sprinkler valve monitoring equipment are located. All of these panels are housed in NEMA 4x enclosures to provide adequate environmental protection of the fire alarm system equipment in the supply plenums. These panels are mounted on a support system made of Unistrut that is mounted to the wall with Hilti Bolt concrete anchor bolts. The panels are further braced by aircraft cable that is attached to the panels and the plenum wall.

Two (one per tunnel) 480v, 30a, 3-phase circuits have been installed from the west portal building to power the fire protection cabinets, remote control cabinets, and valve cabinets located in the west half of each plenum. A 500va Sola transformer has been installed at each panel to provide the 120v power needed to control and monitor all the fire suppression remote mounted equipment. As an over-current protection device ATQR 8/10 Ferraz Shawmut Fuses have been installed on 600v ultra safe modular fuse holders for each panel.

The 500va Transformers are intended to last the length of the 30 year life of the system. However, if transformers need to be replaced the power to the panels will have to be off and the tunnel lockout/tagout procedure implemented. The conductors will have to be removed and the transformer unbolted. A new transformer can then be installed in its place, the conductors reattached and the power returned to the panel. The transformers should be tested on an annual basis with a millimeter to ensure they are operating within the manufacturer's specifications. Replacement should only be done by Sturgeon personnel during warranty period.

The fuses themselves may need to be replaced from time to time throughout the life of the project. To replace the fuses first disconnect the power source and implement the tunnel lockout/tagout procedures. The fuses can now be removed and replaced by hand without the use of tools or equipment. Once the new fuse is in place, remove the lockout tagout and reconnect power

Areas of Concern:

The transformers are intended to last the life of the system but the fuses are designed to protect the system from any over-current surges. Additionally, as with piece of equipment a transformer could fail. As such they may need to be tested yearly and replaced when needed.

Sturgeon Electric Company, Inc.
12150 East 112th Avenue
Henderson, CO 80640
303-286-8000

Testing of 500va Transformers and Fuses: Once Per Year

1.) Disconnect Power Source-
    a. EMWL1- 11
    b. EMEL1- 1,2
2.) Lockout/Tagout Circuit Breaker
3.) Use multi-meter to test voltage/amerage/continuity of transformer and fuses
4.) Repeat for each Transformer
5.) Remove Lockout Tag/out
6.) Reconnect power

Replacing 500va Transformers: As needed

1.) Disconnect Power Source-
    a. EMWL1- 11
    b. EMEL1- 1,2
2.) Lockout/Tagout Circuit Breaker
3.) Disconnect conductors and unbolt transformer from panel
4.) Install new transformer and reconnect conductors
5.) Repeat for each Transformer as needed
6.) Remove Lockout Tag/out
7.) Reconnect power

Replacing Fuses: As needed

1.) Disconnect Power Source-
    a. EMWL1- 11
    b. EMEL1- 1,2
2.) Lockout/Tagout Circuit Breaker
3.) Remove defective fuse by hand
4.) Install new fuse by hand
5.) Repeat for each fuse as needed
6.) Remove Lockout Tag/out
7.) Reconnect power

The SBE - Encapsulated Series

The SBE Encapsulated industrial control transformers are epoxy encapsulated to seal the transformer windings against moisture, dirt and industrial contaminants. Extra deep, molded terminal barriers reduce the chance of electrical failure as the result of arcing or frayed lead wires. The rugged construction and proven reliability of the SBE design is uniquely suited for all industrial environments.

E77014

Features

- 50 - 1000 VA, 50/60 Hz – suitable for worldwide applications.
- Interleaved copper windings reduce I^2R losses and maximize efficiency.
- 55°C Rise, 105°C insulation system to minimize heat
- Epoxy encapsulated to protect cores and coils against moisture, dirt, and other contaminants.
- Meets or Exceeds NEMA Standard ST 1 and ANSI C89.1 for load inrush capability.
- Integrally molded, flame retardant (IEC 707 / ISO Class 1210) Terminal Blocks provide greater terminal contact area and improved conductivity.
- Heavy gauge steel mounting plate
- Mounting dimensions are compatible with similar control transformers.
- ***Secondary fuse holders (FB2X) included for 13/32 x 1- 1/2 cartridges (fuses not included).***
- ***Factory-installed fuse holders are available (See W, WA & WB options).***
- 10 + 2 year warranty

Related Products

- Linear Power Supplies
- DIN Rail DC Power Supplies
- Constant Voltage Transformers
- Line Reactors

SBE Mounting Profiles

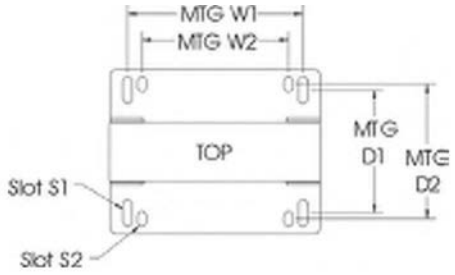

Mounting Dimensions

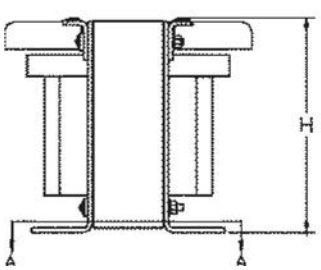

Profile

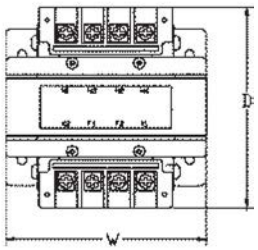

Top View

Accessories

Catalog Number	Description
FBP	Primary "CC" Rejection Type Fuse Holder (Finger Safe covers not available)
FB2	Secondary Fuse Holder only (Glass or Ceramic, ¼" x 1¼" fuse)
FB2X	Secondary Fuse Holder only included where applicable. Not sold separately. (Midget Cartridge Type, 13/32" x 1½" fuse)
FBPC1	Primary "CC" Rejection Type Fuse Holder and Finger Safe Cover Kit
IP20	IEC Touchproof Cover Kit
SBEDIN	IEC Fuse Holder Adaptor Kit
W	Factory installed Primary Fuse Holder with Midget Type (no covers)
WA	Factory installed Fuse Holder with Glass/Ceramic Type and Covers
WB	Factory installed Fuse Holder with Midget Type and Covers

SBE Encapsulated Series Selection Tables

Group 1 – 120 x 240 Volt Primary, 24 Volt Secondary, 60 Hz

c UL us
E77014

VA	Catalog Number	Height (inch)	Width (inch)	Depth (inch)	Mtg Width W1 / W2	Mtg Depth D1 / D2	Slot Size S1 / S2	Approx. Ship Weight (lbs)
50	E050E	2.72	3.01	3.99	2.51 / NA	2.02 / NA	.20 x .33 / .20 x .33	3
75	E075E	2.96	3.39	4.36	2.81 / 2.50	2.10 / NA	.20 x .50 / .20 x .50	4
100	E100E	2.96	3.39	4.61	2.81 / 2.50	2.37 / NA	.20 x .50 / .20 x .50	5
150	E150E	3.89	4.5	4.48	3.74 / 3.12	2.56 / 2.87	.20 x .65 / .20 x .33	8
200	E200E	3.89	4.5	4.79	3.74 / 3.12	2.87 / 3.18	.20 x .65 / .20 x .33	10
250	E250E	3.89	4.5	5.21	3.74 / 3.12	3.29 / 3.61	.20 x .65 / .20 x .33	11
300	E300E	4.53	5.25	5.09	4.38 / 3.75	3.10 / NA	.31 x .71 / .31 x .71	12
350	E350E	4.53	5.25	5.53	4.38 / 3.75	3.54 / NA	.31 x .71 / .31 x .71	15
500	E500E	4.53	5.25	6.31	4.38 / 3.75	4.33 / NA	.31 x .85 / .31 x .85	19
750	E750E	5.56	6.38	6.93	5.32 / 4.37	4.25 / 5.75	.31 x .85 / .31 x .85	31

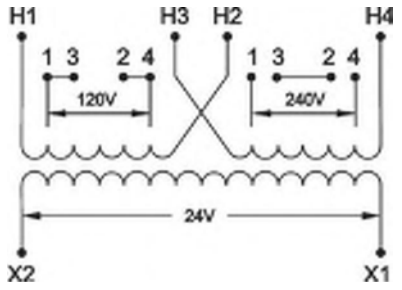

Note: Includes FB2X Secondary fuse holder.

Group 1A – Factory Installed Primary Fuse Holder Class "CC" and:

W - Secondary Fuse Holder (Midget Cartridge, 13/32" x 1½" fuse) supplied, no covers
WA - Secondary Fuse Holder (Glass or Ceramic - Type 3AG, ¼" x 1¼" fuse type)
WB - Secondary Fuse Holder (Midget Cartridge, 13/32" x 1½" fuse)

	Primary Fuse Holder Class "CC"			Dimensions						
VA	W Option - Midget Type Catalog Number	WA Option - Type 3AG w/ Covers Catalog Number	WB Option - Midget Type w/ Covers Catalog Number	Height (inch)	Width (inch)	Depth (inch)	Mtg Width W1 / W2	Mtg Depth D1 / D2	Slot Size S1 / S2	Approx. Ship Weight (lbs)
50	E050EW	E050EWA	E050EWB	4.18	3.01	3.99	2.51 / NA	2.02 / NA	.20 x .33 / .20 x .33	3
75	E075EW	E075EWA	E075EWB	4.41	3.39	4.36	2.81 / 2.50	2.10 / NA	.20 x .50 / .20 x .50	4
100	E100EW	E100EWA	E100EWB	4.41	3.39	4.61	2.81 / 2.50	2.37 / NA	.20 x .50 / .20 x .50	5
150	E150EW	E150EWA	E150EWB	5.36	4.5	4.48	3.74 / 3.12	2.56 / 2.87	.20 x .65 / .20 x .33	8
200	E200EW	E200EWA	E200WB	5.36	4.5	4.79	3.74 / 3.12	2.87 / 3.18	.20 x .65 / .20 x .33	10
250	E250EW	E250EWA	E250EWB	5.36	4.5	5.21	3.74 / 3.12	3.29 / 3.61	.20 x .65 / .20 x .33	11
300	E300EW	E300EWA	E300EWB	5.99	5.25	5.09	4.38 / 3.75	3.10 / NA	.31 x .71 / .31 x .71	12
350	E350EW	E350EWA	E350EWB	5.99	5.25	5.53	4.38 / 3.75	3.54 / NA	.31 x .71 / .31 x .71	15
500	E500EW	NA	E500EWB	5.99	5.25	6.31	4.38 / 3.75	4.33 / NA	.31 x .85 / .31 x .85	19
750	E750EW	NA	E750EWB	7.01	6.38	6.93	5.32 / 4.37	4.25 / 5.75	.31 x .85 / .31 x .85	31

Notes: WA and WB suffix include Finger Safe covers. Fuses not included.
FB2 sold separately for W option. Secondary fusing assembly required.

SBE Control Transformer without Covers - *W Option*

Option
W

SBE Control Transformer with Covers - *WA & WB Option*

Option	Secondary Fusing	
WA	Glass/ Ceramic - Type 3AG (FB2)	
WB	Midget Type (FB2X)	

E500

SBE Encapsulated Series Selection Tables

Group 2 – 220 x 440 Volt Primary, 110 Volt Secondary, 50/60 Hz
230 x 460 Volt Primary, 115 Volt Secondary, 50/60 Hz
240 x 480 Volt Primary, 120 Volt Secondary, 60 Hz

c UL us
E77014

VA	Catalog Number	Height (inch)	Width (inch)	Depth (inch)	Mtg Width W1 / W2	Mtg Depth D1 / D2	Slot Size S1 / S2	Approx. Ship Weight (lbs)
50	E050	2.72	3.01	3.99	2.51 / NA	2.02 / NA	.20 x .33 / .20 x .33	3
75	E075	2.96	3.39	4.36	2.81 / 2.50	2.10 / NA	.20 x .50 / .20 x .50	4
100	E100	2.96	3.39	4.61	2.81 / 2.50	2.37 / NA	.20 x .50 / .20 x .50	5
150	E150	3.89	4.5	4.48	3.74 / 3.12	2.56 / 2.87	.20 x .65 / .20 x .33	8
200	E200	3.89	4.5	4.79	3.74 / 3.12	2.87 / 3.18	.20 x .65 / .20 x .33	10
250	E250	3.89	4.5	5.21	3.74 / 3.12	3.29 / 3.61	.20 x .65 / .20 x .33	11
300	E300	4.53	5.25	5.09	4.38 / 3.75	3.10 / NA	.31 x .71 / .31 x .71	12
350	E350	4.53	5.25	5.53	4.38 / 3.75	3.54 / NA	.31 x .71 / .31 x .71	15
500	E500	4.53	5.25	6.31	4.38 / 3.75	4.33 / NA	.31 x .85 / .31 x .85	19
750	E750	5.56	6.38	6.93	5.32 / 4.37	4.25 / 5.75	.31 x .85 / .31 x .85	31
1000	E1000	5.56	6.38	7.36	5.32 / 4.37	4.68 / 6.18	.31 x .85 / .31 x .85	36

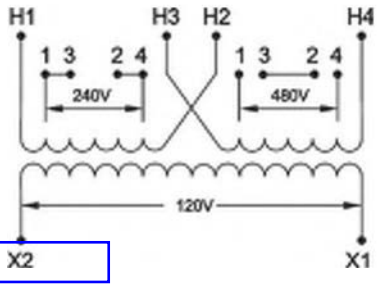

Note: Includes FB2X Secondary fuse holder.

Group 2A – Factory Installed Primary Fuse Holder Class "CC" and:

W - Secondary Fuse Holder (Midget Cartridge, 13/32" x 1½" fuse) supplied, no covers
WA - Secondary Fuse Holder (Glass or Ceramic - Type 3AG, ¼" x 1¼" fuse type)
WB - Secondary Fuse Holder (Midget Cartridge, 13/32" x 1½" fuse)

	Primary Fuse Holder Class "CC"			Dimensions						
VA	W Option - Midget Type Catalog Number	WA Option - Type 3AG w/ Covers Catalog Number	WB Option - Midget Type w/ Covers Catalog Number	Height (inch)	Width (inch)	Depth (inch)	Mtg Width W1 / W2	Mtg Depth D1 / D2	Slot Size S1 / S2	Approx. Ship Weight (lbs)
50	E050W	E050WA	E050WB	4.18	3.01	3.99	2.51 / NA	2.02 / NA	.20 x .33 / .20 x .33	**3**
75	E075W	E075WA	E0750WB	4.41	3.39	4.36	2.81 / 2.50	2.10 / NA	.20 x .50 / .20 x .50	**4**
100	E100W	E100WA	E100WB	4.41	3.39	4.61	2.81 / 2.50	2.37 / NA	.20 x .50 / .20 x .50	**5**
150	E150W	E150WA	E150WB	5.36	4.5	4.48	3.74 / 3.12	2.56 / 2.87	.20 x .65 / .20 x .33	**8**
200	E200W	E200WA	E200WB	5.36	4.5	4.79	3.74 / 3.12	2.87 / 3.18	.20 x .65 / .20 x .33	**10**
250	E250W	E250WA	E250WB	5.36	4.5	5.21	3.74 / 3.12	3.29 / 3.61	.20 x .65 / .20 x .33	**11**
300	E300W	E300WA	E300WB	5.99	5.25	5.09	4.38 / 3.75	3.10 / NA	.31 x .71 / .31 x .71	**12**
350	E350W	E350WA	E350WB	5.99	5.25	5.53	4.38 / 3.75	3.54 / NA	.31 x .71 / .31 x .71	**15**
500	E500W	E500WA	E500WB	5.99	5.25	6.31	4.38 / 3.75	4.33 / NA	.31 x .85 / .31 x .85	**19**
750	E750W	E750WA	E750WB	7.01	6.38	6.93	5.32 / 4.37	4.25 / 5.75	.31 x .85 / .31 x .85	**31**
1000	E1000W	E1000WA	E1000WB	7.01	6.38	7.36	5.32 / 4.37	4.68 / 6.18	.31 x .85 / .31 x .85	**36**

Notes: WA and WB suffix include Finger Safe covers. Fuses not included.
W option for secondary fusing requires assembly (FB2 sold separately).

SBE Control Transformer without Covers - *W Option*

Option
W

SBE Control Transformer with Covers - *WA & WB Option*

Option	Secondary Fusing	
WA	Glass/ Ceramic - Type 3AG (FB2)	
WB	Midget Type (FB2X)	

SBE Series Selection Tables - continued

Group 3 – 240 x 480 Volt Primary, 24 Volt Secondary, 60 Hz

c UL us
E77014

VA	Catalog Number	Height (inch)	Width (inch)	Depth (inch)	Mtg Width W1 / W2	Mtg Depth D1 / D2	Slot Size S1 / S2	Approx. Ship Weight (lbs)
50	E050D	2.72	3.01	3.99	2.51/NA	2.02/N/A	.20 x .33	3
100	E100D	2.96	3.39	4.61	2.81/2.50	2.37/NA	.20 x .50	5
250	E250D	3.89	4.5	5.21	3.74/3.12	3.29/3.61	.20 x .65	11
500	E500D	4.53	5.25	6.31	4.38/3.75	4.33/NA	.31 x .71	19

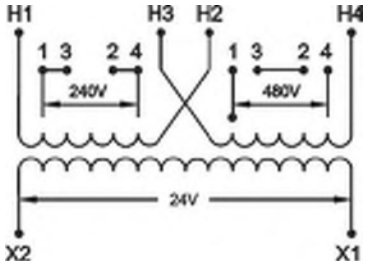

Note: Includes FB2X Secondary fuse holder.

Group 4 – 208/240/277 Volt Primary, 120/24 Volt Secondary, 60 Hz

c UL us
E77014

VA	Catalog Number	Height (inch)	Width (inch)	Depth (inch)	Mtg Width W1 / W2	Mtg Depth D1 / D2	Slot Size S1 / S2	Approx. Ship Weight (lbs)
50	E050JL	2.72	3.01	3.99	2.51/NA	2.02/N/A	.20 x .33	3
100	E100JL	2.96	3.39	4.61	2.81/2.50	2.37/NA	.20 x .50	5
250	E250JL	3.89	4.5	5.21	3.74/3.12	3.29/3.61	.20 x .65	11
500	E500JL	4.53	5.25	6.31	4.38/3.75	4.33/NA	.31 x .71	19

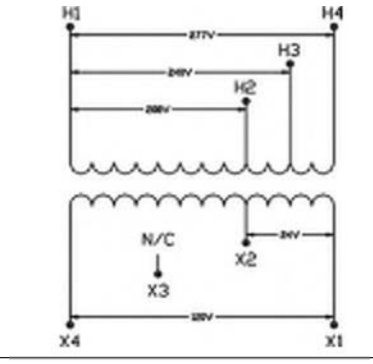

Note: Will only accept one FB2 secondary fuse holder. Will not accept FB2X secondary fuse holder.

Group 5 – 208/240/480/600 Volt Primary, 120/24 Volt Secondary, 60 Hz
200/230/460/575 Volt Primary, 115/23 Volt Secondary, 60 Hz

c UL us
E77014

VA	Catalog Number	Height (inch)	Width (inch)	Depth (inch)	Mtg Width W1 / W2	Mtg Depth D1 / D2	Slot Size S1 / S2	Approx. Ship Weight (lbs)
50	E050JN	2.96	3.39	4.36	2.81/2.50	2.10/NA	.20 x .50	4
100	E100JN	3.89	4.5	4.48	3.74/3.12	2.56/2.87	.20 x .65	8
150	E150JN	3.89	4.5	5.21	3.74/3.12	3.29/3.61	.20 x .65	11
250	E250JN	4.53	5.25	5.53	4.38/3.75	3.54/NA	.31 x .71	15
500	E500JN	5.56	6.38	6.93	5.32/4.37	4.25/5.75	.31 x .85	30

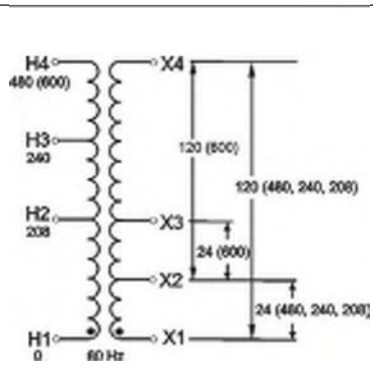

Note: Will only accept one FB2 secondary fuse holder. Will not accept FB2X secondary fuse holder.

USCC & USM

24, 48 & 600 VOLT/ULTRASAFE™ FUSEHOLDERS

ULTRASAFE MODULAR FUSE HOLDERS

Ferraz Shawmut ULTRASAFE™ modular 24, 48 and 600 volt Fuse Holders introduce a new level of safety for Class CC (USCC) and Midget 1-1/2" x 13/32" (USM) as well as DC rated fuses up to 30 amperes. ULTRASAFE holders qualify as "finger safe" under IEC and DIN standards to an IP20 grade of protection, including fuse changing (with the flick of a finger). ULTRASAFE holders are available in 1, 2, 3 or 4 poles, with or without blown-fuse indicators in each pole. AC indicators are orange and DC are red. The multi-pole units can also be made up by ordering pin-tie handles for field assembly. ULTRASAFE holders save up to 15% mounting space and any combination can be snapped onto 35mm DIN rail for extra savings in panel building time. ULTRASAFE holders with Class CC fuses chosen for Type "2" protection give one of the safest protection packages in the industry. Ultrasafe body material is tough and durable polyamide, with exceptional insulating properties.

HIGHLIGHTS:

- Finger Safe
- Optional Indicator Lights
- DIN Rail Mount
- Compact Footprint
- Quick, Easy Fuse Change

APPLICATIONS:

- All circuits up to 600 volts for motors, control circuits, transformers, etc.
- Non-load disconnect
- 12, 24 and 48 volt DC circuits

Ratings

- 600VAC, 30A
  Min. voltage to operate indicator light:
  90VAC 115 VDC
  [Less than 0.7 mA leakage current at 600V]
- Special Indicator for 24VDC, 30A
- Special Indicator for 48VDC, 30A
- Short Circuit Current Rating: Class CC 200kA, Midget Fuse 100kA
- 800VAC, 1000VDC 30A ratings on USM without indicators

Approvals

- All Ultrasafe Fuse Holders meet the requirements of UL512
- UL Listed
  Class CC
  Guide IZLT, File E52283
- UL Recognized Component
  Midget
  Guide IZLT2, File E52283
- CSA Certified
  Class CC & Midget
  C22.2, Class 6225
  File 32169
- IEC 269
  690VAC, 32A
  Midget version only.

RECOMMENDED FUSE USAGE

USCC . . . . . use with **ATDR*, ATMR, ATQR**

USM . . . . . use with **ATQ, ATM*, A6Y-2B, A25Z-2, TRM, OTM, A15QS-2, GFN, GGU, A60Q-2**

*** Recommended for DC Applications DCT**

USCC & USM 24, 48 & 600 VOLT/ULTRASAFE™ FUSEHOLDERS

For use with Class CC Fuses

CATALOG NO.	DESCRIPTION
USCC1	1 pole
USCC1I	1 pole with indicator
USCC2	2 pole
USCC2I	2 pole with indicators
USCC3	3 pole
USCC3I	3 pole with indicators
USCC3IN	3 pole with indicators and a 4th neutral pole
USCC3N	3 pole with a 4th neutral pole
USCC4	4 pole
USCC4I	4 pole with indicators

For use with Midget (1-1/2" x 13/32") Fuses

USM1	1 pole
USM1I	1 pole with indicator
USM2	2 pole
USM2I	2 pole with indicators
USM3	3 pole
USM3I	3 pole with indicators
USM3IN	3 pole with indicators and a 4th neutral pole
USM3N	3 pole with a 4th neutral pole
USM4	4 pole
USM4I	4 pole with indicators

Neutral Link Pole

USN	1 Pole with Integral Neutral Link

Accessories

USPTH2	Pin-tie handle for 2 poles
USPTH3	Pin-tie handle for 3 poles
USPTH4	Pin-tie handle for 4 poles

Special Indicator Options For use with Low Voltage DC Rated Class CC & Midget Fuses

PART NUMBER	INDICATOR TYPE	OPERATING VOLTAGE	LEAKAGE CURRENT
USM1I-DC24	LED	12 to 24 VDC	10mA max.(@24vdc)
USM1I-DC24P	LED	20 to 24 VDC	1mA max.(@24vdc)
USM1I-DC48	LED	35 to 48 VDC	10mA max.(@48vdc)
USCC1I-DC24	LED	12 to 24 VDC	10mA max.(@24vdc)
USCC1I-DC48	LED	35 to 48 VDC	10mA max.(@48vdc)

H

Dimensions

DIMENSION	mm	In
A	17.5	0.69
B	35.0	1.38
C	52.5	2.07
D	70.0	2.76
E	78.0	3.07
F	2.5	0.10
G	78.0	3.07
H	59.0	2.32
I	42.5	1.67
J	5.0	0.20
K	45.0	1.77

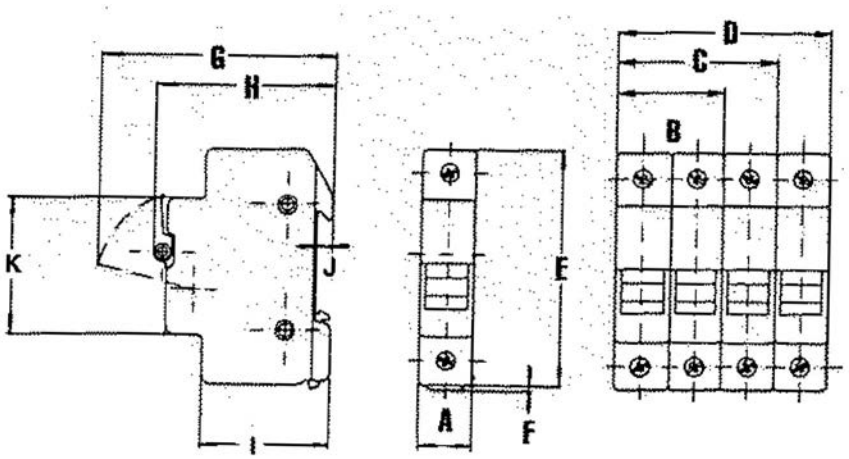

Terminal screws: Phillips/slot head
Suggested screw torque: 14.75 in-lbs.
Connector type: Pressure plate
Wire range: #6 to #14 (solid/stranded Cu)
Load-break disconnect: No

ATQR

TAKE *CONTROL* OF FAULT CURRENTS HEADED FOR YOUR *CONTROL* TRANSFORMER

ATQR small-dimension fuses feature time delay characteristics ideally suited for the high inrush currents of control transformers, solenoids, and similar inductive loads. The newest member of our Amp-trap 2000® family of fuses - ATQR fuses provide superior protection for the branch circuits of electrical distribution systems.

Features/Benefits

- **Time delay** for control transformer inrush loads without nuisance opening
- **Highly current limiting** for low peak let-thru current
- **Rejection-style design** prevents replacement errors (when used with recommended fuse blocks)
- **High-visibility orange label** ensures instant recognition, and simplifies replacement
- **Metal-embossed date and catalog number** for traceability and lasting identification
- **Fiberglass body** provides dimensional stability in harsh industrial settings
- **High-grade silica filler** ensures fast arc quenching and high current limitation

HIGHLIGHTS:

- Time Delay
- Best Choice for Small Transformer Protection
- Most Current-Limiting

APPLICATIONS:

- Control Transformers
- Solenoids
- Inductive Loads
- Lighting, Heating & General-purpose Loads

Ratings

- **AC:** 1/10 to 30A 600VAC, 200kA I.R.
- **DC:** 1/10 to 30A300VDC, 100kA I.R.

Approvals

- UL Listed to Standard 248-4
- DC Listed to UL Standard 248
- CSA Certified to Standard C22.2 No. 248.4

TIME DELAY/CLASS CC FUSES

Standard Fuse Ampere Ratings, Catalog Numbers

AMPERE RATING	CATALOG NUMBER	AMPERE RATING	CATALOG NUMBER	AMPERE RATING	CATALOG NUMBER	AMPERE RATING	CATALOG NUMBER
1/10	ATQR1/10	8/10	ATQR8/10	2-8/10	ATQR2-8/10	7-1/2	ATQR7-1/2
1/8	ATQR1/8	1	ATQR1	3	ATQR3	8	ATQR8
3/16	ATQR3/16	1-1/8	ATQR1-1/8	3-2/10	ATQR3-2/10	9	ATQR9
2/10	ATQR2/10	1-1/4	ATQR1-1/4	3-1/2	ATQR3-1/2	10	ATQR10
1/4	ATQR1/4	1-4/10	ATQR1-4/10	4	ATQR4	12	ATQR12
3/10	ATQR3/10	1-1/2	ATQR1-1/2	4-1/2	ATQR4-1/2	15	ATQR15
4/10	ATQR4/10	1-6/10	ATQR1-6/10	5	ATQR5	17-1/2	ATQR17-1/2
1/2	ATQR1/2	1-8/10	ATQR1-8/10	5-6/10	ATQR5-6/10	20	ATQR20
6/10	ATQR6/10	2	ATQR2	6	ATQR6	25	ATQR25
3/4	ATQR3/4	2-1/4	ATQR2-1/4	6-1/4	ATQR6-1/4	30	ATQR30
		2-1/2	ATQR2-1/2	7	ATQR7		

Recommended ATQR Class CC Primary Fuses For Single Phase Control Transformers

TRANS VA	PRIMARY VOLTS	PRIMARY FLA	ATQR AMPS
25	600	0.04	1/10
	480	0.05	1/10
	240	0.10	2/10
	208	0.12	1/4
	120	0.21	4/10
50	600	0.08	1/4
	480	0.10	1/4
	240	0.21	4/10
	208	0.24	1/2
	120	0.42	6/10
75	600	0.13	1/4
	480	0.16	3/10
	240	0.31	1/2
	208	0.36	3/4
	120	0.63	1
100	600	0.17	3/10
	480	0.21	4/10
	240	0.42	6/10
	208	0.48	1
	120	0.83	1-1/2
150	600	0.25	1/2
	480	0.31	1/2
	240	0.63	1
	208	0.72	1-1/2
	120	1.25	2-1/2
200	600	0.33	1/2
	480	0.42	6/10
	240	0.83	1-1/2
	208	0.96	2
	120	1.67	3
250	600	0.42	6/10
	480	0.52	1-1/8
	240	1.04	2
	208	1.2	3
	120	2.08	4*

TRANS VA	PRIMARY VOLTS	PRIMARY FLA	ATQR AMPS
300	600	0.50	1-1/8
	480	0.63	1-1/2
	240	1.25	2-1/2
	208	1.44	3
	120	2.5	5*
500	600	0.83	1-1/2
	480	1.04	2
	240	2.08	4*
	208	2.40	6*
	120	4.17	10*
750	600	1.25	2-1/2
	480	1.56	3
	240	3.13	7*
	208	3.61	8*
	120	6.25	15*
1000	600	1.67	3
	480	2.08	4*
	240	4.16	10*
	208	4.81	12*
	120	8.33	20*
1500	600	2.50	5*
	480	3.13	7*
	240	6.25	10
	208	7.21	20*
	120	12.5	25*
2000	600	3.33	8*
	480	4.17	10*
	240	8.33	20+-*
	208	9.62	20+-*
3000	600	5.00	12+*
	480	6.25	15+*
	240	12.5	30+-*
5000	600	8.33	20+-*
	480	10.4	25+*

Dimensions

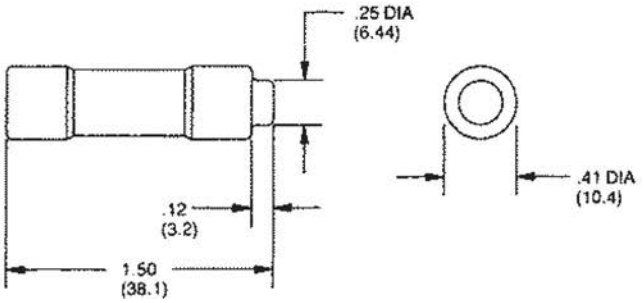

Recommended Fuse Blocks for Class CC Fuses

Number of Poles	ULTRASAFE™ Indicating Fuse Holder	Screw with Double Quick Connects	Pressure Plate with Double Quick Connects	Copper Box Connector
ADDER		30310R	30320R	30350R
1	USCC1I	30311R	30321R	30351R
2	USCC2I	30312R	30322R	30352R
3	USCC3I	30313R	30323R	30353R

Primary fuses - If primary FLA is less than 2 amps, fuse may be 300% max. (500% for motor control). If primary FLA exceeds 2 amps but is less than 9 amps, fuse may not exceed 167% of primary FLA unless secondary protection is used, when it may be increased to 250%. Fuse sizes shown are based on approx. 40 x FLA for .01 sec.

* Secondary protection is required for these ratings.
\+ Fuse will withstand 30 x FLA for .01 second
++ Fuse will withstand 25 x FLA for .01 second

TIME DELAY/CLASS CC FUSES

Peak Let-Thru Current Data–ATQR1/4 to 30, 600 Volts AC

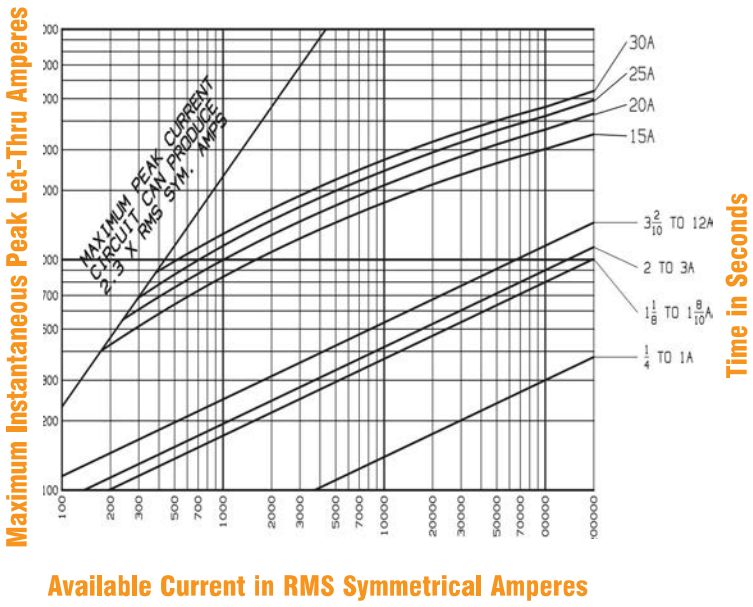

Melting Time-Current Data ATQR 3/16 to 1-8/10, 600 Volts

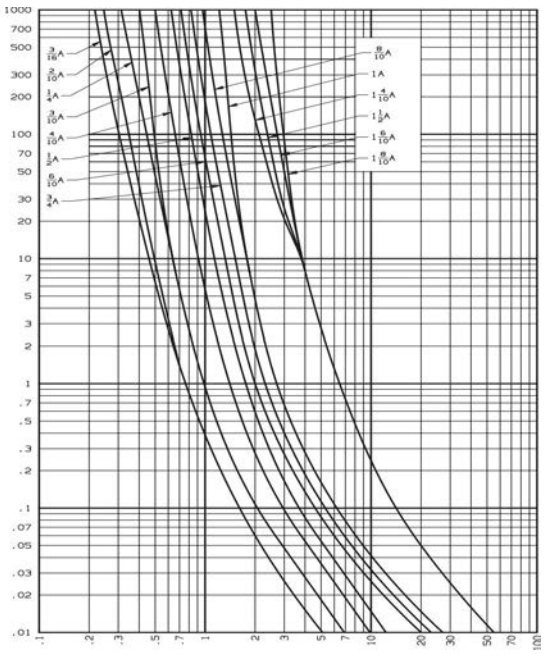

Melting Time-Current Data ATQR 2 to 30, 600 Volts AC

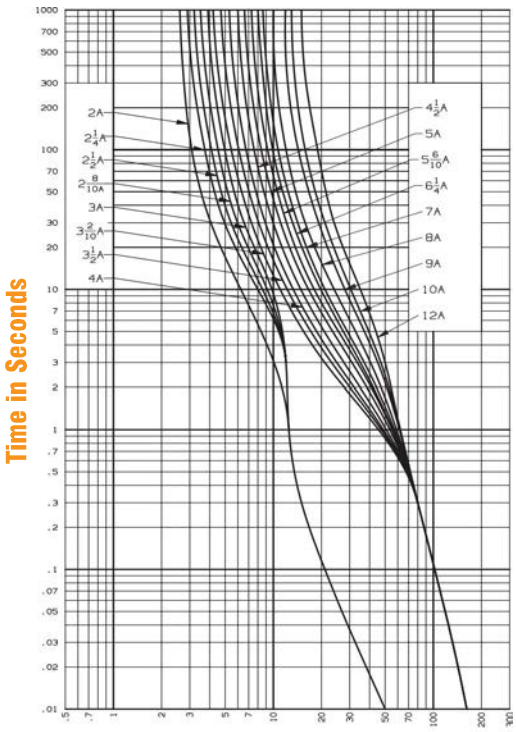

AMP-TRAP 2000®

ATDR

TIME DELAY/CLASS CC

A

THE BEST PROTECTION FOR TODAY'S SMALL MOTORS.

Amp-trap 2000® ATDR small-dimension fuses can provide IEC Type 2 "no damage" protection to your facility's increasingly sensitive branch circuit components and small motors – minimizing the risk of fault-related damage. ATDR Class CC fuses deliver the best time delay characteristics in their class with excellent cycling ability for small motor loads.

Features/Benefits

- **Time delay** for motor starting inrush currents without nuisance opening
- **Highly current limiting** for low peak let-thru current
- **Improved cycling ability** for frequent motor starts/stops without nuisance fuse opening
- **Rejection-style design** prevents replacement errors (when used with recommended fuse blocks)
- **High-visibility orange label** ensures instant recognition, simplifies replacement
- **Metal-embossed date and catalog number** for traceability and lasting identification
- **Fiberglass body** provides dimensional stability in harsh industrial settings
- **High-grade silica filler** ensures fast arc quenching and optimum current limitation

HIGHLIGHTS:

- Time Delay
- Best Choice for Small Motor Protection
- Highly Current-Limiting
- AC & DC Rated

APPLICATIONS:

- Small Motors
- Contactors
- Lighting, Heating & General Loads
- Branch Circuit Protector

Ratings

- **AC:** 1/4 to 30A 600VAC, 200kA I.R.
- **DC:** 1/4 to 30A 300VDC, 100kA I.R.

Approvals

- UL Listed to Standard 248-4 File 2137
- CSA Certified to Standard C22.2 No. 248.4
- DC Listed to UL Standard 248

TIME DELAY/CLASS CC FUSES

ATDR

Standard Fuse Ampere Ratings, Catalog Numbers

AMPERE RATING	CATALOG NUMBER	AMPERE RATING	CATALOG NUMBER	AMPERE RATING	CATALOG NUMBER	AMPERE RATING	CATALOG NUMBER	AMPERE RATING	CATALOG NUMBER
1/4	ATDR1/4	1-1/2	ATDR1-1/2	3	ATDR3	6	ATDR6	12	ATDR12
1/2	ATDR1/2	1-6/10	ATDR1-6/10	3-2/10	ATDR3-2/10	6-1/4	ATDR6-1/4	15	ATDR15
8/10	ATDR8/10	1-8/10	ATDR1-8/10	3-1/2	ATDR3-1/2	7	ATDR7	17-1/2	ATDR17-1/2
1	ATDR1	2	ATDR2	4	ATDR4	7-1/2	ATDR7-1/2	20	ATDR20
1-1/8	ATDR1-1/8	2-1/4	ATDR2-1/4	4-1/2	ATDR4-1/2	8	ATDR8	25	ATDR25
1-1/4	ATDR1-1/4	2-1/2	ATDR2-1/2	5	ATDR5	9	ATDR9	30	ATDR30
1-4/10	ATDR1-4/10	2-8/10	ATDR2-8/10	5-6/10	ATDR5-6/10	10	ATDR10		

Dimensions

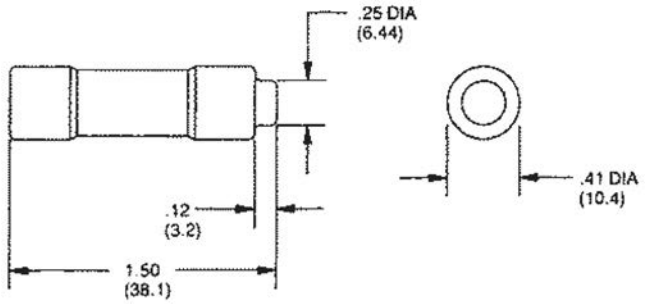

Small Motor Fuse Protection, 600 Volts AC or Less

MOTOR FULL LOAD AMPERES	ATDR RATING*	
	MINIMUM DUTY	NORMAL DUTY
.71 - .89	1-1/4	1-6/10
.90 - 1.19	1-6/10	2
1.20 - 1.34	2	2-1/2
1.35 - 1.79	2-1/2	3
1.80 - 2.25	3	4
2.26 - 2.69	4	5
2.70 - 2.90	4	6
2.91 - 3.20	5	6
3.21 - 3.75	5	7
3.76 - 4.50	6	8
4.51 - 5.34	8	10
5.35 - 5.69	10	12
5.70 - 6.70	12	12
6.71 - 7.79	12	15
7.80 - 8.88	15	17-1/2
8.89 - 11.1	17-1/2	20
11.2 - 13.3	20	25
13.4 - 15.2	25	30

* The National Electrical Code allows time-delay Class CC fuses to be sized at up to 400% (maximum) of motor FLA, if needed.

Recommended Fuse Blocks for Class CC Fuses

Number of Poles	CATALOG NUMBER			
	ULTRASAFE™ Indicating Fuse Holder	Screw Connector w/ Double Quick Connects	Pressure Plate Connector w/ Double Quick Connects	Copper Box Connector
ADDER		30310R	30320R	30350R
1	USCC1I	30311R	30321R	30351R
2	USCC2I	30312R	30322R	30352R
3	USCC3I	30313R	30323R	30353R

ATDR1/4 to 30

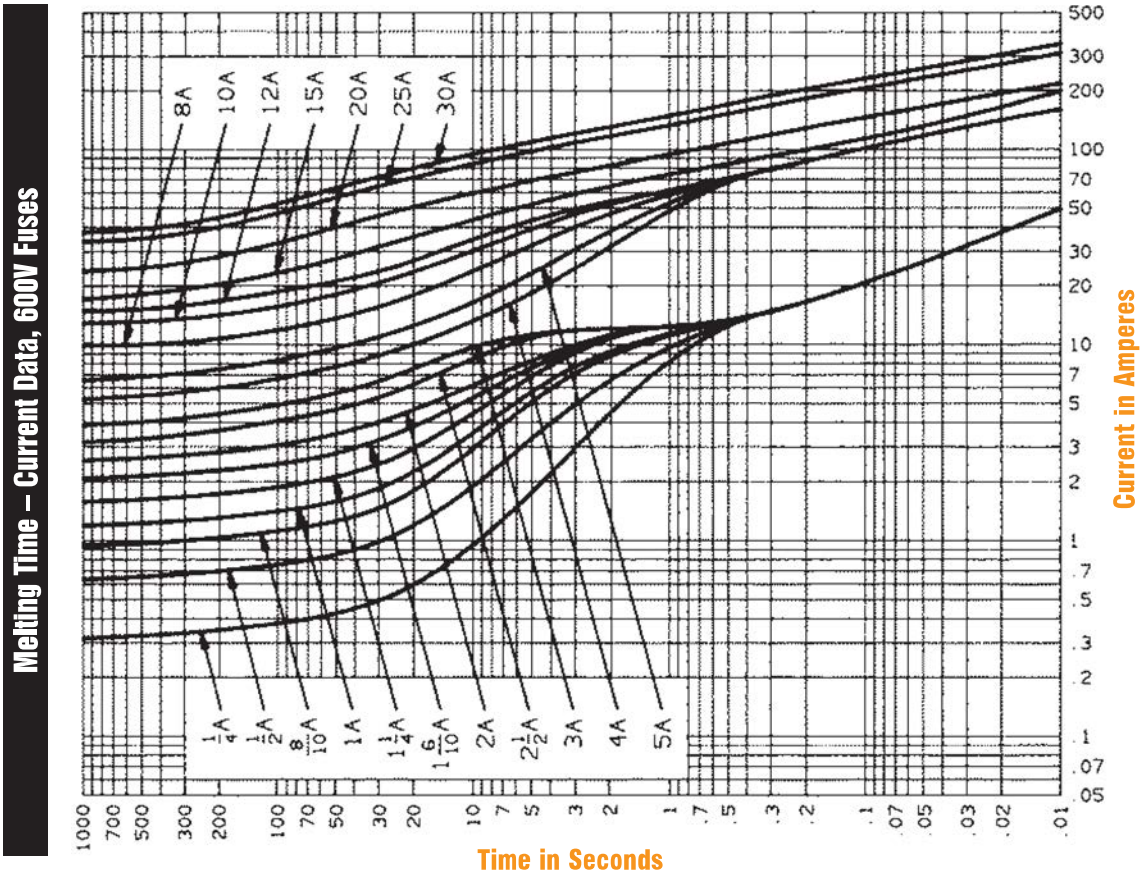

Peak Let-Thru Current Data – ATDR1/4 to 30, 600 Volts AC

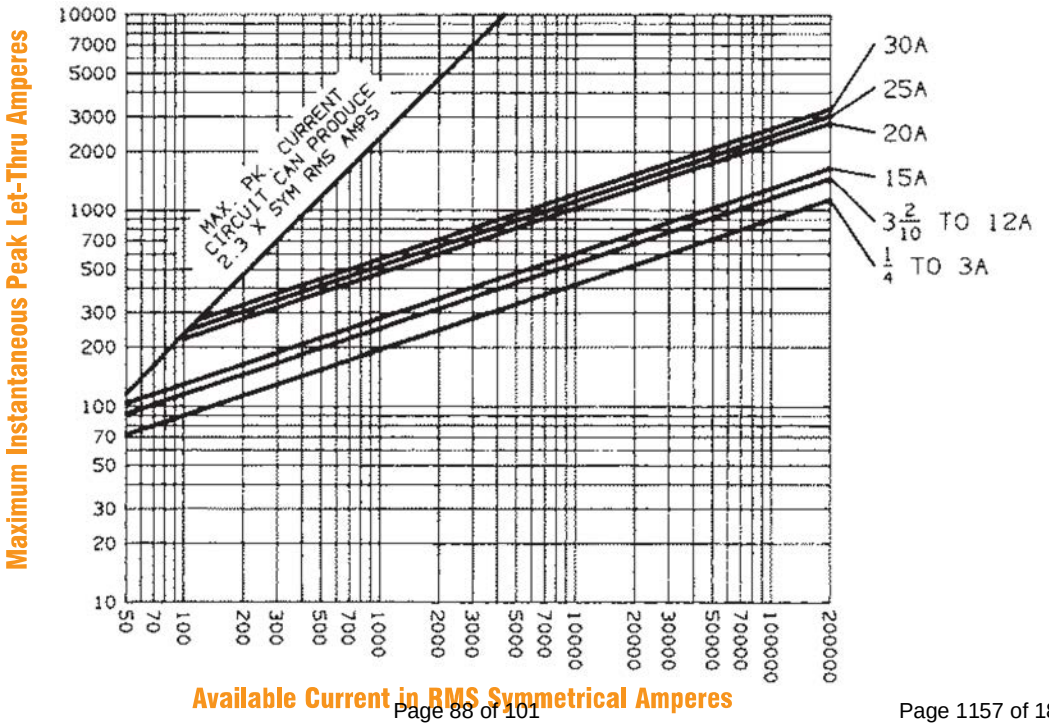

Sturgeon ELECTRIC
12150 E 112TH AVE, HENDERSON, CO 80640

MYR GROUP

GENERATOR INSTALLATION

PREPARED BY: **Jason Willis**
CELL PHONE: **(303) 944-1190**
FAX: **(303) 227-6978**
OFFICE: **303-286-8000**
EMAIL: **JWillis@myrgroup.com**

** Respect * Integrity * Responsiveness **
** Creativity * Initiative * Team Work * Safety **

SECo No.: 841323

Sturgeon Electric Company, Inc.
12150 East 112th Avenue
Henderson, CO 80640
303-286-8000

Generator Training Agenda

I. Introductions- 5 Min

II. Review and familiarization of provided material- 5 Min

III. Safety and PPE Œ10 Min

- a. Electrical
- b. Moving Parts
- c. Heat
- d. Noise

IV. Equipment Overview. Note: Topics also covered during hands-on and walk around- 30 Min

- a. Generator Set
  - i. Engine (Sensors, Radiator, Exhaust)
  - ii. Generator (Theory of Operation)
  - iii. Control Panel (Interface, Functions, and Menus)
  - iv. Automatic transfer switch
  - v. Auxiliary Equipment (Block Heater, Battery Charger, Annunciators)

V. Purpose of Equipment- 15 Min

- a. Industrial Standby/Emergency Power for use during Utility outages

VI. Maintenance. Note: Topics also covered during hands-on and walk- 15 Min

- a. CRM contracts
  - i. Minor PMs and Major PMs
  - ii. Battery replacement
  - iii. Various emergency procedures, (loss of coolant, oil, resetting faults)

Sturgeon Electric Company, Inc.
12150 East 112th Avenue
Henderson, CO 80640
303-286-8000

VII. Hands-On and Walk Around of Equipment- 1 Hour

a. Engine, sensors, accessories, radiator, cooling etc.
b. Alternator
c. Control, switches, menus and navigation, adjustments
d. Demonstration and engine run
e. Automatic transfer switches and remote annunciators
f. Final question and answer session.

PLEASE SEE CUMMINS O AND M MANUALS FOR DETAILS TO BE COVERED BY CUMMINS TRAINING

Sturgeon Electric Company, Inc.
12150 East 112th Avenue
Henderson, CO 80640
303-286-8000

Generator Installation-

A new generator has been installed at the west portal building to provide backup electrical power for these major components in the event of a power failure. These components include fire alarm panels, fire protection cabinets, fiber optic linear heat detection systems, video camera, three (3) work stations, and associated flat screens displays. Electronic equipment associated with these systems also have battery back-up. These batteries will keep all equipment powered during and AC power transition between utility and generator sources The existing east portal building generator provides backup electrical power for system electronic equipment powered from the east electrical distribution system.

A new 480v, 3-phase fire pump controller/automatic transfer switch has been installed to power the fire pump from either utility power or the new generator. A new 480v, 3 phase automatic transfer switch powers all other equipment associated with the fire suppression system including: fire pump, circulating pumps, boilers, boiler room lighting, fire protection cabinets, remote control cabinets, zone valves, and a new 208Y/120V, 100A, 3-phase panel.

The operations and maintenance training for the generator will be provided by the representatives of Cummins Rocky Mountain Power Generation.

Location of
350Kw
Generator
FIRE ALARM - SITE PLAN - WEST
SCALE: 1/64" = 1'-0"
SCALE: 1/64" = 1'-0"
N

Power Generation Division
8211 East 96th Avenue
Henderson, CO 80640

350kw Cummins Generator

Sales Representative: Nathan Zeleski
Phone #: 303-927-2205
Email: Nathan.zeleski@cummins.com

Aluminum Generator Enclosure

Steel Enclosures

Weather Protective and Sound Attenuated 150-725 kW Gensets

Specification Sheet
150-725 kW

Description

Field installable enclosure kits are designed to enclose the entire generator set and allow ample air flow for cooling. Multiple kit configurations are available for each genset model to suit most weather protection and sound control requirements.

Weather protective enclosures (F001-WPE) provide weather protection and include an internally mounted exhaust silencer. The enclosure and exhaust silencer are appropriate for applications where sound reducing enclosures are not required.

Level I sound attenuated enclosures (F001-L1) provide weather protection and include an internally mounted exhaust silencer and sound insulating panels which reduce the sound level of the set to a level below that achieved with a weather protective enclosure. The enclosure and exhaust silencer are appropriate for applications where sound reducing enclosures are required.

Level II sound attenuated enclosures (F001-L2) provide weather protection and include an internally mounted exhaust silencer and sound insulating panels which reduce the sound level of the set to a level below that achieved with a Level I sound attenuated enclosure. The enclosure and exhaust silencer are appropriate for applications where sound reducing enclosures are required.

Refer to genset model cooling system and sound data sheets for specific capabilities.

Features and Benefits

- 14-gauge, low carbon, hot-rolled ASTM A1011 steel construction (panels)
- 12-gauge, low carbon, hot-rolled ASTM A1011 steel construction (posts)
- Stainless steel hardware
- Compact footprint
- Zinc phosphate pretreatment, e-coat primer and super durable powder topcoat print minimizes corrosion and color fade
- Two or three recessed doors per side, depending on generator set dimensions, for service access
- Doors keyed alike for added security and convenience
- Weather protective seals around all doors on WPE & sound attenuated enclosures
- Enclosed exhaust silencer improves safety and protects against rust
- Critical sound level exhaust silencers in sound attenuated enclosures
- Rain collar and rain cap
- Non-hygroscopic sound-attenuating material
- Easy access lifting points for spreader bars and forklift, depending on model
- Enclosure attaches directly to generator set skid base
- Designed for ambient temperatures up to 40 °C (104 °F)
- Enclosures are designed for outdoor use only
- Standard wind rating of 100 mph
- Removable enclosure panels or hinged doors provide easy generator set access
- Fixed louvers
- Cambered roof prevents water accumulation
- Fuel and electrical stub-up area within enclosure perimeter
- Aluminum construction offered as option for corrosive environment
- Galvannealed construction offered as option for corrosive environment

©2014 Cummins NPower. All rights reserved.
Cummins NPower and Cummins are registered trademarks of Cummins Inc. Specifications are subject to change without notice.

Automatic Transfer Switch

OTPC transfer switch open and closed transition

Description

OTPC transfer switches are designed for operation and switching of electrical loads between primary power and standby generator sets. They are suitable for use in emergency, legally required and optional standby applications. The switch monitors both power sources, signals generator set startup, automatically transfers power, and returns the load to the primary power source when the utility returns and stabilizes.

OTPC transfer switches are available with closed transition transfer. By briefly connecting the two sources (for 100 msec or less), the transfer from the alternate source back to the normal source occurs without interruption in the power supply to loads.

UL	All switches are UL 1008 Listed with UL Type Rated cabinets and UL Listed CU-AL terminals.
CSA	All switches are certified to CSA 282 Emergency Electrical Power Supply for Buildings, up to 600 VAC.
NEC	Suitable for use in emergency, legally required and standby applications per NEC 700, 701 and 702.
NFPA	All switches comply with NFPA 70, 99 and 110 (Level 1).
NEMA	All switches comply with NEMA ICS 10.
IEEE	All switches comply with IEEE 446 Recommended Practice for Emergency and Standby Power Systems.
ISO 9001	This transfer switch is designed and manufactured in facilities certified to ISO9001.

Features

PowerCommand® control - A fully featured microprocessor-based control with digital display. Controls allow operator to enter settings and make adjustments to software-enabled features easily and accurately. Accommodates up to eight event schedules.

Programmed transition – Open transition timing can be adjusted to completely disconnect the load from both sources for a programmed time period, as recommended by NEMA MG-1 for transfer of inductive loads.

Advanced transfer switch mechanism – Unique bi-directional linear actuator provides smooth, continuous transfer switch action during automatic operation.

Robust control system design - Optically isolated logic inputs and isolation transformers for AC power inputs provide high-voltage surge protection.

Main contacts - Heavy-duty silver alloy contacts with multi-leaf arc chutes are rated for 100% load interruption. They require no routine contact maintenance and provide 100% continuous current ratings.

Communications capability - The transfer switch is capable of communicating with other transfer switches, SCADA and remote monitoring systems, or Cummins Power Generation generators utilizing LonWorks® protocol.

Easy service/access - Single-plug harness connection and compatible terminal markings simplify servicing. Access space is ample. Door-mounted controls are field-programmable; not tool is required.

Complete product line - Cummins Power Generation offers a wide range of equipment, accessories and services to suit virtually any backup power application.

Warranty and service - Products are backed by a comprehensive warranty and a worldwide network of distributors with factory-trained service technicians.

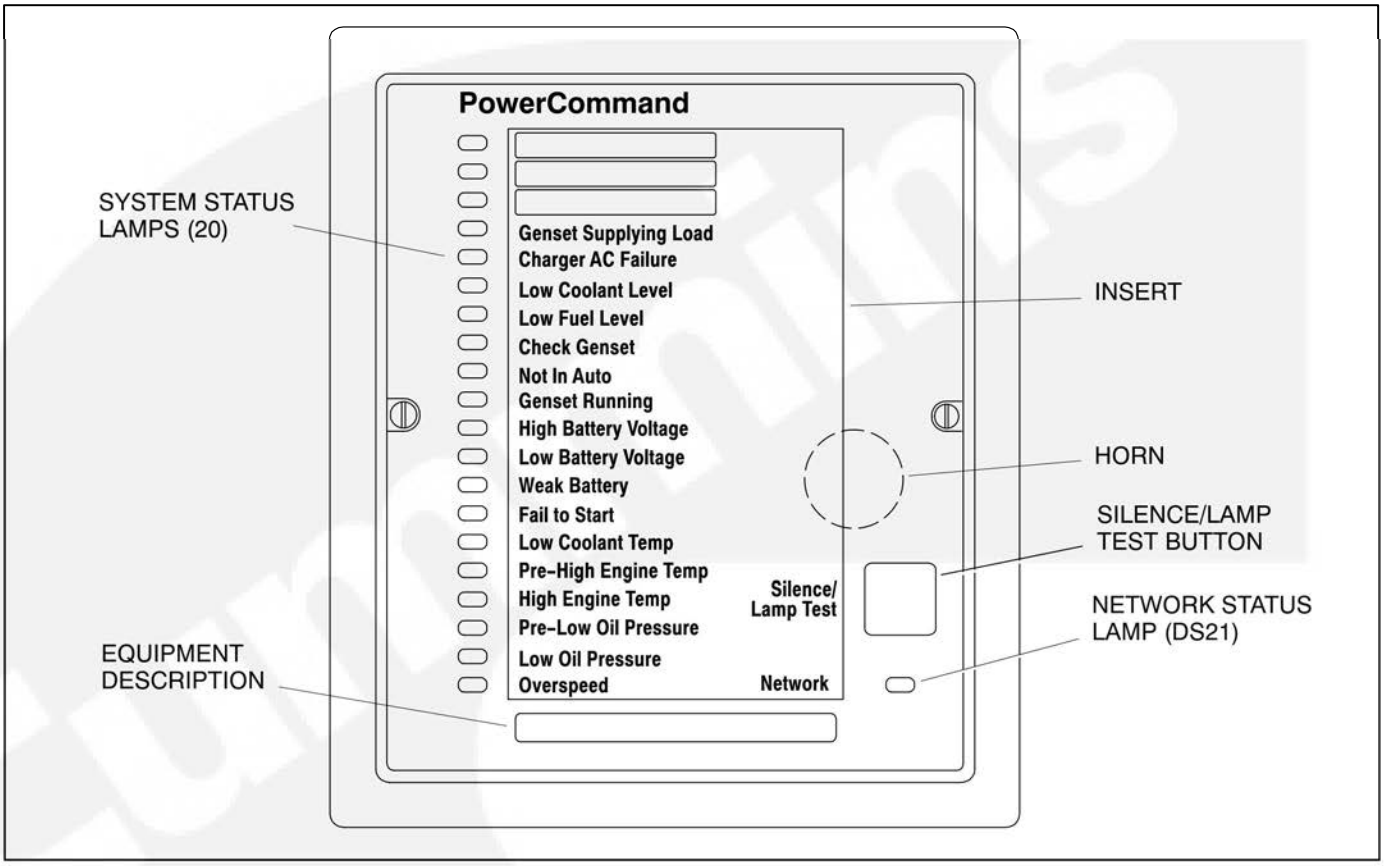

FIGURE 1. ANNUNCIATOR PANEL

GENERAL

The universal annunciator (see Figure 1) provides lamps and a horn to annunciate the operating status and fault conditions of an emergency power system. It is designed for connection to either a 12 VDC or a 24 VDC control system. It can be configured to be either a positive or negative signal device.

This annunciator can be used to replace legacy annunciators 300–4510 ANN (negative signal) and 300–4511 ANP (positive signal).

Two versions of the universal annunciator are available.

- 300–5929–01 = Panel Mounted
- 300–5929–02 = Panel with Enclosure

NETWORK TYPES

The universal annunciator can communicate using either a PCCNet or a Modbus network. The functionality differs, depending upon which network is being used.

The Network LED (DS21) is not configurable and does not activate the horn. With a Modbus network, the Network LED is used as a Modbus activity LED.

PCCNet Network

When connected to a PCCNet, multiple devices can broadcast their NFPA 110 status. The annunciator monitors broadcasts and ORs together all sources along with its discrete inputs and displays the OR's status on its 20 system status LEDs. When each device on the PCCNet network broadcasts its NFPA110 status logical, it will only activate a bit if the device is the source of that status. The annunciator does the same thing. It only broadcasts the status of its direct wired inputs. The annunciator will not OR together all sources and send the information to other devices.

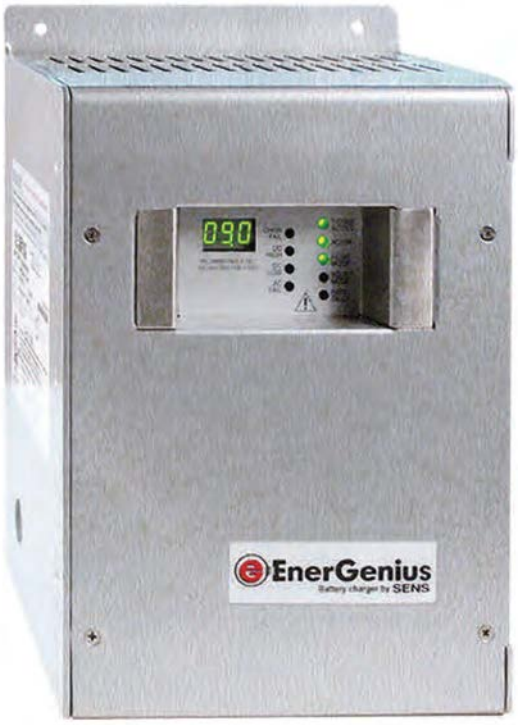

Installation & Operation Manual

NRG12-10: 12-Volt, 10-Amp Battery Charger
NRG24-10: 24-Volt, 10-Amp Battery Charger
NRG22-10: 12/24-Volt, 10-Amp Battery Charger

SENS Part Number: 101295
Document Revision: Q
DCN Number: 106080
Date: January 17, 2012

Installation or service questions?
Call SENS at 1.800.742.2326 (303.678.7500)
between 8 a.m. and 5 p.m. (Mountain Time)
Monday through Friday, or visit our website.

1840 Industrial Circle
Longmont, CO 80501
Phone: 303.678.7500
800.742.2326
Fax: 303.678.7504
Email: service@sens-usa.com
Web: www.sens-usa.com

Copyright © Stored Energy Systems LLC 2006

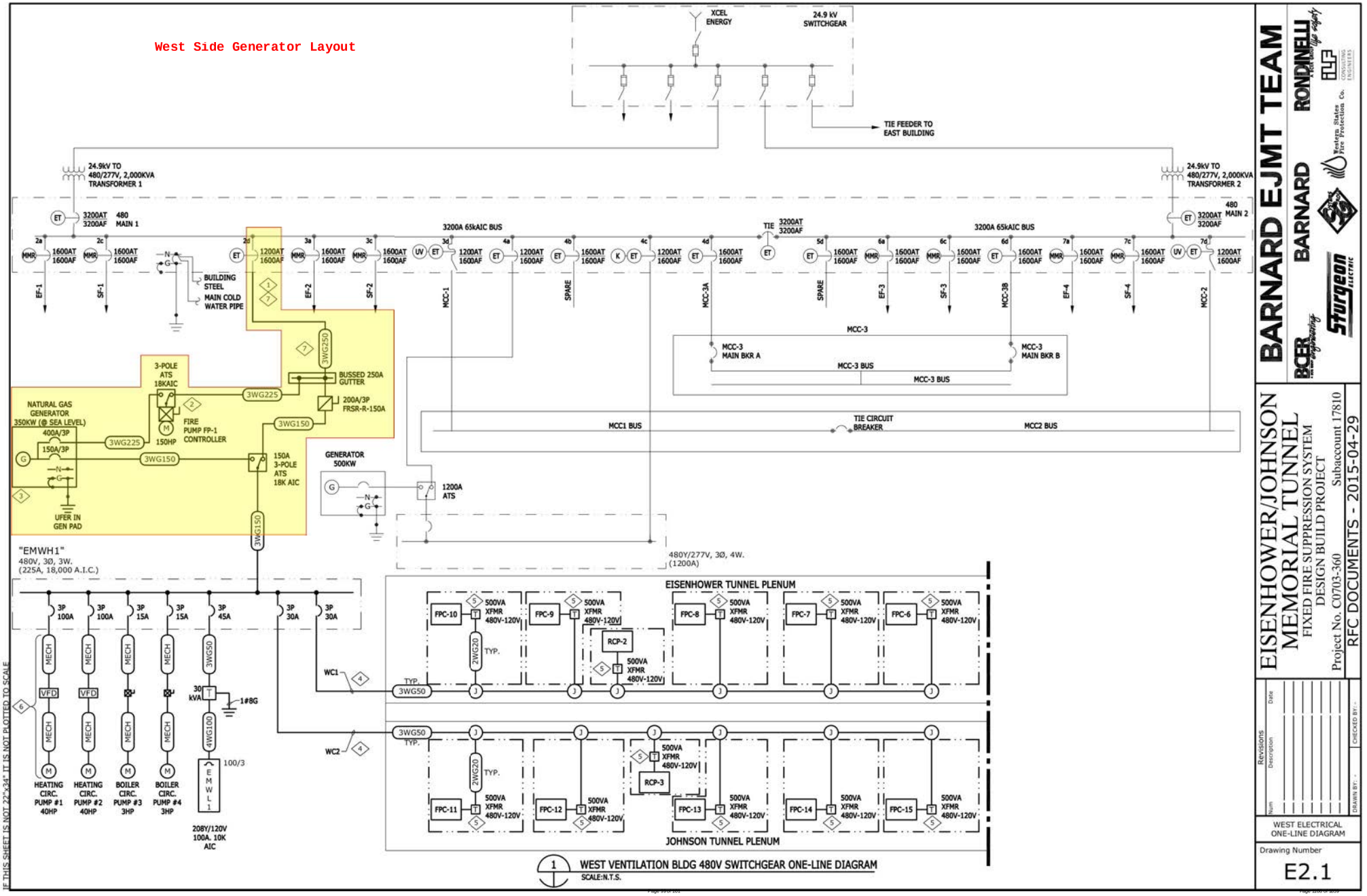

BARNARD EJMT TEAM

RONDINELLI

BARNARD

BCER Engineering

Sturgeon Electric

EISENHOWER/JOHNSON MEMORIAL TUNNEL
FIXED FIRE SUPPRESSION SYSTEM
DESIGN BUILD PROJECT
Project No. C0703-360 Subaccount 17810

RFC DOCUMENTS - 2015-04-29

Revisions
Num | Description | Date

DRAWN BY: | CHECKED BY:

WEST ELECTRICAL ONE-LINE DIAGRAM

Drawing Number
E2.1

IF THIS SHEET IS NOT 22"x34" IT IS NOT PLOTTED TO SCALE

West Side Generator Equipment and Conduit Layout

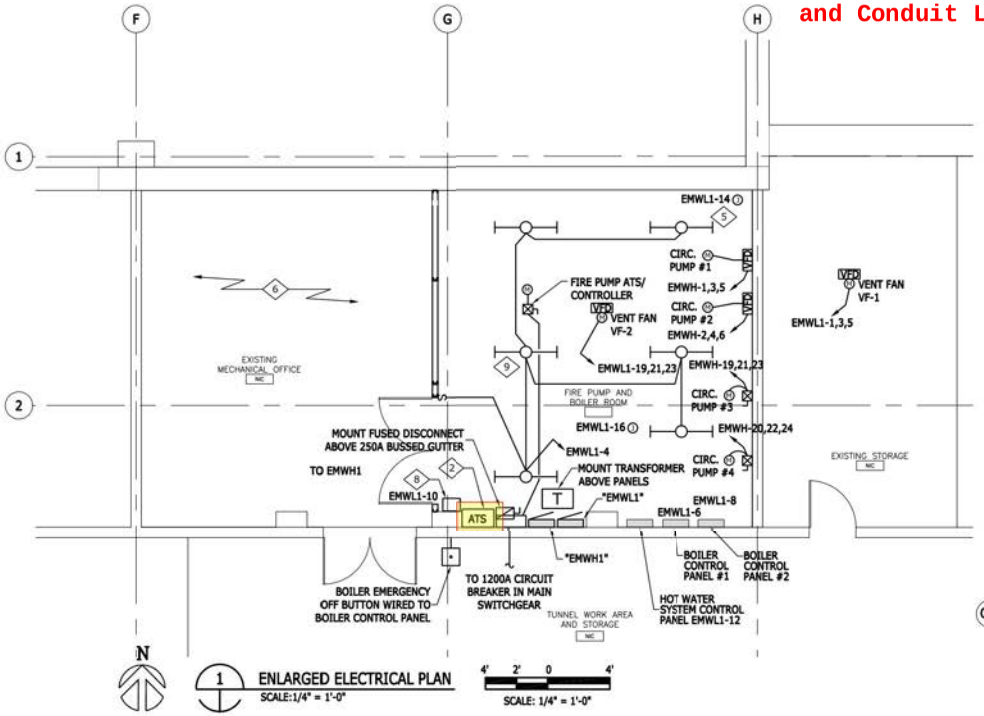

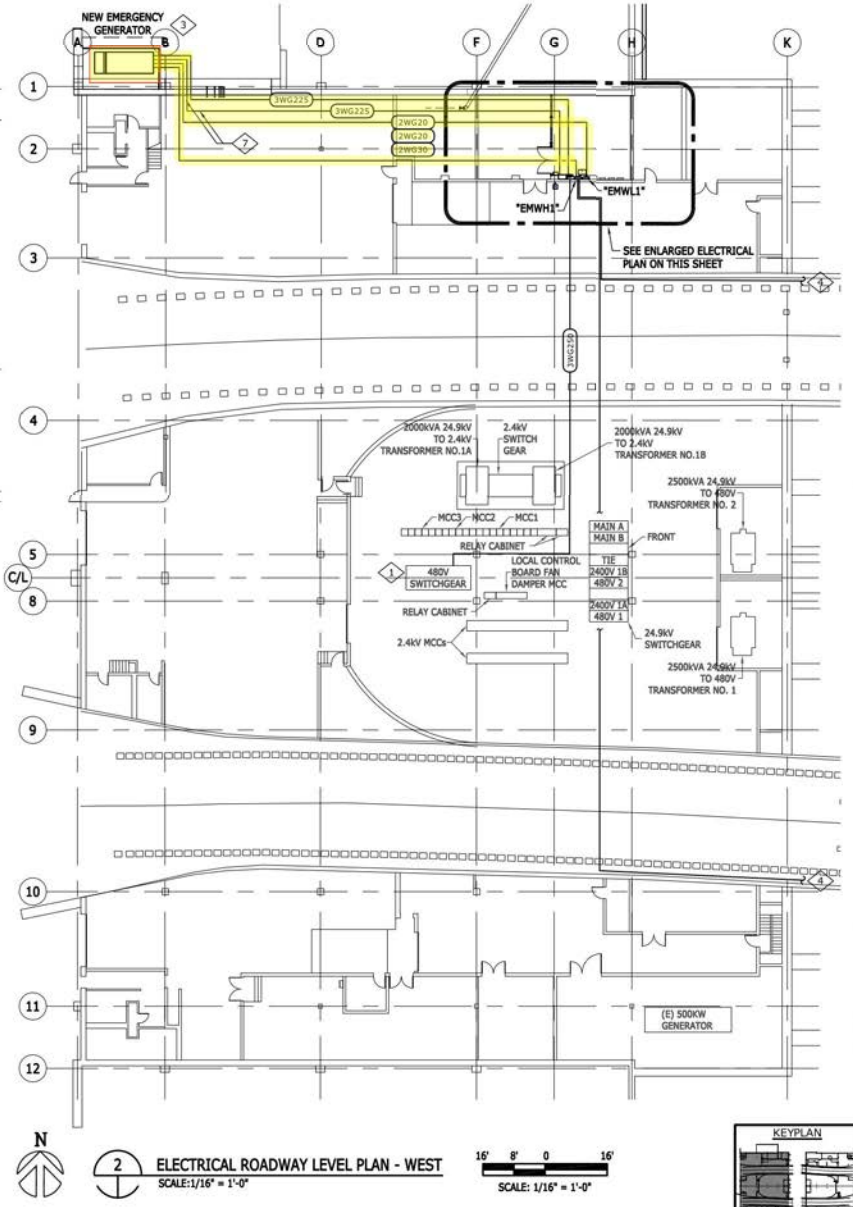

KEYPLAN

WEST EAST

BARNARD EJMT TEAM

RONDINELLI

BARNARD

Tedrow Pepper Structural Engineering

Sturgeon Electric

BCER Engineering

EISENHOWER/JOHNSON MEMORIAL TUNNEL

FIXED FIRE SUPPRESSION SYSTEM

DESIGN BUILD PROJECT

Project No. C0703-360 Subaccount 17810

RFC DOCUMENTS - 2015-04-29

Revisions

Num Description Date

DRAWN BY: CHECKED BY:

ELECTRICAL ROADWAY LEVEL PLAN - WEST

Drawing Number

E5.0

IF THIS SHEET IS NOT 22"x34" IT IS NOT PLOTTED TO SCALE

Sturgeon Electric Company, Inc.
12150 East 112th Avenue
Henderson, CO 80640
303-286-8000

Eisenhower – Johnson Tunnel Training Agenda

The training for the equipment supplied by Cummins Rocky Mountain for the Eisenhower – Johnson Tunnel project will be conducted, on a yet to be determined date, by Keith Harty. Keith is one of Cummins Rocky Mountain's top technicians, and he has extensive experience and factory training in setup, testing, operation and repair of the equipment supplied on this project.

Classroom training will cover safety, lock-out/tag-out procedures, personal protective equipment, purpose and overview of the standby generator, associated equipment, and general maintenance requirements. A discussion of the information in the operator's manual for the generator set will happen prior to walk around presentation/demonstration of the equipment. Copies of all material presented will be provided. The classroom session for the generator will require approximately one and half hours and the walk around presentations will cover an hour.

During the walk around presentation all maintenance items will be pointed out and discussed in detail by the trainer, followed by a questions and answer session. Major items include but are not limited to; engine lube oil, filters, engine coolant heaters, and locations of key engine temperature, pressure transducers, and sensors located on the engine. Proper starting battery maintenance and locations for checking fluid levels and adding fluids will also be covered. The generator control panel operation and supervisory functions will also be discussed and demonstrated.

Sturgeon ELECTRIC
12150 E 112TH AVE, HENDERSON, CO 80640

MYR GROUP

OPERATIONS MANUAL:
350kW Generator

PROJECT:
EISENHOWER/JOHNSON MEMORIAL TUNNEL
FIRE SUPPRESSION SYSTEM
PROJECT# C 0703-360

PREPARED BY: **JASON WILLIS**
CELL PHONE: **(303) 944-1190**
FAX: **(303) 227-6978**
OFFICE: **(303)-853-7651**
EMAIL: **JWillis@myrgroup.com**

** Respect * Integrity * Responsiveness **
** Creativity * Initiative * Team Work * Safety **

Rocky Mountain
Power Generation Division
8211 East 96th Avenue
Henderson, CO 80640

OPERATIONS MANUAL

Project Name: Eisenhower Johnson Memorial Tunnel
Date: 09/30/2015

Contractor:
Sturgeon Electric
12150 East 112th Ave
Henderson, CO 80640
(303) 853-7651

Equipment Supplier:
Cummins Rocky Mountain
8211 East 96th Avenue
Henderson, CO 80640
(800) 927-7201

350 kW Generator Set
300 Amp Automatic Transfer Switch

Sales Representative: Nathan Zeleski
Phone #: 303-927-2205
Email: Nathan.zeleski@cummins.com

Our energy working for you.™

Power Generation

* Print as 11”x17” and trim to fit binder cover.

Eisenhower-Johnson
Memorial Tunnel

350 kW Generator Set
300 Amp ATS

CRM Project#: 66545

CONTRACTOR:
Sturgeon Electric
12150 East 112th Ave
Henderson, CO 80640
(303) 853-7651

EQUIPMENT SUPPLIER:
Cummins Rocky Mountain
8211 East 96th Avenue
Henderson, CO 80640
(800) 927-7201

Eisenhower-Johnson Memorial Tunnel

350 kW Generator Set
300 Amp Automatic Transfer Switch

Contractor:
Sturgeon Electric
12150 East 112th Ave
Henderson, CO 80640
(303) 853-7651

Equipment Supplier:
Cummins Rocky Mountain
8211 East 96th Avenue
Henderson, CO 80640
(800) 927-7201

TABLE OF CONTENTS

HEALTH & SAFETY

MSDS INFORMATION

Page #6 **BILL OF MATERIALS**

Page #86 **GENERATOR OPERATOR MANUAL**

Page #94 **TRANSFER SWITCH OPERATOR MANUAL**

Page #170 **ACCESSORIES**

Page #401 **DRAWINGS & DIAGRAMS**

- *Interconnect Diagram*
- *Wiring Diagrams*
- *Mechanical Drawings*
- *ATS Drawings & Diagrams*

Health and Safety

Our energy working for you.™

Cummins Power Generation

General Information

Generator Set

FOREWORD

The purpose of this manual is to provide the users with sound, general information. It is for guidance and assistance with recommendations for correct and safe procedures. Cummins Power Generation Limited cannot accept any liability whatsoever for problems arising as a result of following recommendations in this manual.

The information contained within the manual is based on information available at the time of going to print. In line with Cummins Power Generation Limited policy of continuous development and improvement, information may change at any time without notice. The users should therefore ensure that before commencing any work, they have the latest information available.

Users are respectfully advised that it is their responsibility to employ competent persons to carry out any installation work in the interests of good practice and safety. Consult your Authorised Distributor for further installation information. It is essential that the utmost care is taken with the application, installation and operation of any diesel engine due to their potentially hazardous nature. Careful reference should also be made to other Cummins Power Generation Limited literature, in particular the Controller, and the Engine Operation and Maintenance Manuals.

Should you require further assistance contact:-

Cummins Power Generation Limited
Columbus Avenue
Manston Park
Manston
Ramsgate
Kent CT12 5BF
United Kingdom

Tel. No.: +44 (0) 1843 255000
Fax. No.: +44 (0) 1843 255902

e-mail: cpg.uk@cummins.com

Web Sites: www.cumminspower.com

CONTENTS

Section Title Page

1. Introduction 1
1.1 General Information 1
1.2 Safety Precautions 1
1.2.1 Engine Warning 1
1.3 Generator Plant Safety Code 2
1.3.1 Generator Set Warning Labels 2

2. Warning Notes 3
2.1 Warning, Caution and Note Styles Used In This Manual 3
2.2 Warnings 3
2.2.1 Electricity 3
2.2.2 High Pressures 3
2.2.3 Maintenance 3
2.2.4 Supply Isolation 4
2.2.5 Reinstatement of Supply 4

3. Standards 5
3.1 Radio Frequency 5
3.2 Standards, Codes & Regulations 5
3.3 Build Standards 6

4. Safety Precautions 7
4.1 General 7
4.2 Electrical Hazards 7
4.3 Engine Waste 9
4.4 Exhaust Gas Hazards 9
4.5 Natural Gas 10
4.6 Fire Hazards 11
4.7 Fluids 12
4.8 High Temperature Hazards 12
4.9 Moving Part Hazards 13
4.10 Noise 13

5. Substances Hazardous to Health 15
5.1 Antifreeze (Fleetguard – ES compleat/EG premix) 16
5.1.1 Hazardous Reactions 16
5.1.2 Protective Measures 16
5.1.3 Storage / Transport 16
5.1.4 Emergency Action 17
5.2 Antifreeze (Valvoline coolant premix) 18
5.2.1 Hazardous Reactions 18
5.2.2 Protective Measures 18
5.2.3 Storage / Transport 18
5.2.4 Emergency Action 19
5.3 Antifreeze (Valvoline – MPG Coolant 50/50) 20
5.3.1 Hazardous Reactions 20
5.3.2 Protective Measures 20
5.3.3 Storage / Transport 20
5.3.4 Emergency Action 21
5.4 Antifreeze (Valvoline – MPG Coolant 67/33) 22
5.4.1 Hazardous Reactions 22
5.4.2 Protective Measures 22
5.4.3 Storage / Transport 22

5.4.4 Emergency Action 23
5.5 Coolant Treatment – Water Filter 24
5.5.1 Hazardous Reactions 24
5.5.2 Protective Measures 24
5.5.3 Storage / Transport 24
5.5.4 Emergency Action 25
5.6 Coolant Treatment - Liquid Additive 26
5.6.1 Hazardous Reactions 26
5.6.2 Protective Measures 26
5.6.3 Storage / Transport 26
5.6.4 Emergency Action 27
5.7 Gas Oil 28
5.7.1 Hazardous Reactions 28
5.7.2 Protective Measures 28
5.7.3 Storage / Transport 28
5.7.4 Emergency Action 29
5.8 Grease – Chevron SRI No. 2 30
5.8.1 Hazardous Reactions 30
5.8.2 Protective Measures 30
5.8.3 Storage/Transport 30
5.8.4 Emergency Action 31
5.9 Grease – Exxon Polyrex® EM 32
5.9.1 Hazardous Reactions 32
5.9.2 Protective Measures 32
5.9.3 Storage/Transport 32
5.9.4 Emergency Action 33
5.10 Grease – Klüber Asonic GHY72 34
5.10.1 Hazardous Reactions 34
5.10.2 Protective Measures 34
5.10.3 Storage/Transport 34
5.10.4 Emergency Action 35
5.11 Grease – Mobilgrease XTC 36
5.11.1 Hazardous Reactions 36
5.11.2 Protective Measures 36
5.11.3 Storage/Transport 36
5.11.4 Emergency Action 37
5.12 Grease –Val-Lith EP 2 38
5.12.1 Hazardous Reactions 38
5.12.2 Protective Measures 38
5.12.3 Storage/Transport 38
5.12.4 Emergency Action 39
5.13 Lubrication Oil – Premium Blue E 15W40 40
5.13.1 Hazardous Reactions 40
5.13.2 Protective Measures 40
5.13.3 Storage / Transport 40
5.13.4 Emergency Action 41
5.14 Sulphuric Acid Battery Quality 1140 – 1400 SG (15-50%) 42
5.14.1 Hazardous Reactions 42
5.14.2 Protective Measures 42
5.14.3 Storage / Transport 42
5.14.4 Emergency Action 43
5.14.5 Special Note: Identification of Usage 44
5.14.6 Special Note: Concentrated Sulphuric Acid 44
5.14.7 Special Note: Lead Acid Batteries 44
5.15 Potassium Hydroxide – Solid 45
5.15.1 Hazardous Reactions 45
5.15.2 Protective Measures 45
5.15.3 Storage / Transport 45
5.15.4 Emergency Action 46
5.16 Potassium Hydroxide – Solution 47

5.16.1 Hazardous Reactions 47
5.16.2 Protective Measures 47
5.16.3 Storage / Transport 47
5.16.4 Emergency Action 48
5.16.5 Special Note: Identification of Usage 48
5.16.6 Special Note: Disposal 48
5.17 Natural Gas 49
5.17.1 Hazardous Reactions 49
5.17.2 Protective Measures 49
5.17.3 Storage / Transport 49
5.17.4 Emergency Action 50

Illustrations

Section Title Page
Figure 3-1 Radio Frequency Warning 5

SECTION 1 – INTRODUCTION

1. Introduction

1.1 General Information

Personnel engaged in the installation, commissioning, operation and maintenance of generator sets must be competent and experienced in these fields. They must also comply with all relevant and current statutory requirements and regulations, including the provisions of the Health and Safety at Work Act (1974), and any modification and amendment that may subsequently become a legal requirement, together with any local requirements/regulations.

Before operating the generator set, read this manual and become familiar with the equipment and its operation (including all controls, manually operated valves and shutdown devices). Correct operation and maintenance is essential for safe and efficient operation of this set.

Read and become familiar with the Safety Precautions listed in this manual and within any other manuals related to the equipment. Many accidents result from a failure to observe fundamental safety rules and precautions.

There are many potential hazards that can occur during the operation of a generator set, which cannot always be anticipated. Therefore a warning cannot be included in the manual for every possible circumstance that might involve a potential hazard.

Should a procedure be used that has not been specifically recommended, then the personnel involved must be satisfied that it is safe and will not damage the generator set.

1.2 Safety Precautions

Copy and post these suggestions in potentially hazardous areas.

1.2.1 Engine Warning

WARNING: DO NOT OPERATE AN ENGINE WHERE THERE ARE, OR CAN BE, COMBUSTIBLE VAPOURS.

THESE VAPOURS CAN BE SUCKED THROUGH THE AIR INTAKE SYSTEM AND CAUSE ENGINE ACCELERATION AND OVER-SPEEDING, WHICH CAN RESULT IN A FIRE, OR AN EXPLOSION.

WHERE AN ENGINE, DUE TO ITS APPLICATION, MIGHT OPERATE IN A COMBUSTIBLE ENVIRONMENT, SUITABLE OVERSPEED SHUTDOWN DEVICES MUST BE FITTED.

THE EQUIPMENT OWNER AND OPERATOR ARE RESPONSIBLE FOR SAFE OPERATION IN A HOSTILE ENVIRONMENT.

CONSULT YOUR AUTHORISED DEALER FOR FURTHER INFORMATION.

1.3 Generator Plant Safety Code

Before operating the generator set, read *the Operation and Maintenance* manuals and become familiar with them and the equipment. Safe and efficient operation can be achieved only if the equipment is properly operated and maintained. Many accidents are caused by failure to follow fundamental rules and precautions.

1.3.1 Generator Set Warning Labels

Warning signs are provided on the generator set at the point of risk. To avoid injury, always take the necessary precautions - as indicated on the sample signs shown below:

	Caution / Warning. Indicates a risk of personal injury.
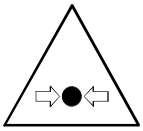	**Caution / Warning of Pressure Hazard.** Indicates a risk of personal injury from pressurised fluids.
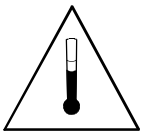	**Caution / Warning of Temperature Hazard.** Indicates a risk of personal injury from high temperature.
	Caution / Warning of Radio Frequency Hazard. Indicates a risk of operating radio frequency communications equipment in the vicinity of the generator set.
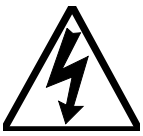	**Caution / Warning of High Voltage Hazard.** Indicates a risk of personal injury from electric shock.
	Caution / Warning of High Voltage Hazard. Indicates that earth leads only must be connected at this point.
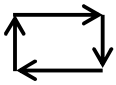	**Caution.** Indicates a risk of personal injury from equipment that may be subject to Automatic Starting.

SECTION 2 – WARNING NOTES

2. Warning Notes

2.1 Warning, Caution and Note Styles Used In This Manual

The following safety styles found throughout this manual indicate potentially hazardous conditions to the operator, service personnel or the equipment.

WARNING; WARNS OF A HAZARD THAT MAY RESULT IN SEVERE PERSONAL INJURY OR DEATH.

Caution: Warns of a hazard or an unsafe practice that can result in product or property damage.

Note: A short piece of text giving information that augments the current text.

2.2 Warnings

WARNING: IT IS IMPORTANT TO READ AND UNDERSTAND ALL SAFETY NOTICES PROVIDED IN THIS MANUAL. IMPROPER OPERATION OR MAINTENANCE COULD RESULT IN A SERIOUS ACCIDENT OR DAMAGE TO THE EQUIPMENT CAUSING INJURY OR DEATH.

2.2.1 Electricity

WARNING: ELECTRICITY CAN KILL! LETHAL VOLTAGES MAY BE PRESENT IN MUCH OF THE EQUIPMENT REFERRED TO IN THIS MANUAL.

2.2.2 High Pressures

WARNING: LIQUIDS OR GASES THAT ARE HIGHLY PRESSURISED CAN PASS THROUGH THE SKIN AND INTO THE BODY. THEY CAN ALSO CAUSE DAMAGE TO EQUIPMENT.

2.2.3 Maintenance

WARNING: ONLY AUTHORISED AND COMPETENT PERSONNEL WHO ARE FAMILIAR WITH THE EQUIPMENT AND ITS OPERATION SHOULD CARRY OUT MAINTENANCE.

WARNING: DEPENDENT UPON THE CONTROL SYSTEM FITTED, THIS UNIT MAY OPERATE AUTOMATICALLY AND COULD START WITHOUT WARNING.

Caution: If using a fork-lift truck, during installation or re-siting of the generator set, ensure the forks are correctly aligned at right angles to the bedframe before inserting into the fork-lift pockets.

WARNING: MOVING PARTS CAN CAUSE SEVERE PERSONAL INJURY OR DEATH. USE EXTREME CAUTION AROUND HOT MANIFOLDS, MOVING PARTS, ETC..

TO PREVENT SERIOUS BURNS, AVOID CONTACT WITH HOT METAL PARTS SUCH AS RADIATOR, TURBOCHARGER AND EXHAUST SYSTEM.

WARNING: TO COMPLETE MAINTENANCE TASKS AT HEIGHT, SUITABLE EQUIPMENT FOR PERFORMING THESE TASKS MUST BE USED IN ACCORDANCE WITH THE LOCAL GUIDELINES AND LEGISLATION. FAILURE TO FOLLOW THESE GUIDELINES AND LEGISLATION CAN RESULT IN SEVERE PERSONAL INJURY OR DEATH.

2.2.4 Supply Isolation

Caution: *If the engine has been running recently, or if the optional battery charger has been switch on, explosive gases (given off during battery charging) may be present in the vicinity of the batteries. Ensure the area is well ventilated before disconnecting batteries.*

Caution: *Remove AC power to the cooling system heaters before disconnecting battery leads. Heaters will run continuously without DC power and can overheat and damage heater.*

WARNING: **BEFORE CARRYING OUT ANY MAINTENANCE, ISOLATE ALL SUPPLIES TO THE GENERATOR SET AND ANY CONTROL PANELS. RENDER THE SET INOPERATIVE BY DISCONNECTING THE PLANT BATTERY.**

Note: *Shut down the generator set as described in the Operation and Maintenance Manual supplied with the set.*

1. Turn the Mode switch on the control panel to Off (O).
2. Remove the key from the Mode switch (if applicable), and account for all other keys for safekeeping.
3. As an additional precaution, thoroughly ventilate the plant room before disconnecting any leads.
4. Isolate and lock off the heater control box, where fitted.
5. Isolate and lock off the supply to the battery charger, where fitted.
6. Isolate the fuel supply to the engine
7. Disconnect the starting batteries and control system batteries, (if separate). Disconnect the negative (-) cable first.
8. Fit Warning notices at each of the above points to indicate Maintenance in Progress – Plant Immobilised for Safe Working.

2.2.5 Reinstatement of Supply

Reinstate all protective devices removed or disconnected during Maintenance or Overhaul, before putting the set back into Service.

The procedure for reinstatement is the reverse of the procedure for isolation.

SECTION 3 – STANDARDS

3. Standards

3.1 Radio Frequency

The apparatus has been tested according to EN 61000-6-2:1999 (IEC 61000-6-2:1999) and BS EN 61000-6-4:2007, specifying the limits of radio frequency immunity and emissions to meet the essential requirements of the EMC directive 2004/108/EC.

From these tests the manufacturer has established that as a precaution against undue effects, no radio frequency communications equipment should be operated at a distance of less than three metres from any part of the apparatus when the generator set could, or is relied upon to, provide power.

The effective separation distance should be increased if the radio frequency communications equipment is found to interfere with the apparatus, the onus lies with the customer to effectively test for adverse effects on the apparatus before usage of the equipment.

NO RADIO FREQUENCY COMMUNICATIONS EQUIPMENT

MAY BE OPERATED IN THE VICINITY OF THIS APPARATUS

Figure 3-1 Radio Frequency Warning

3.2 Standards, Codes & Regulations

The generator set and its control system are manufactured under a registered quality control system approved to BS EN ISO 9001 (2000). The following regulations are observed where applicable:

- The Health & Safety at work Act 1974
- The Control of Substances Hazardous to Health Regulations 2002, (SI 2002 No. 2677)
- IEE Wiring Regulations for Electrical Installations (16th Edition)
- The Electricity at Work Regulations 1989
- The Environmental Protection Act 1990
- The Health & Safety at Work Regulations 1992
- The EMC Directive 2004/108/EC
- The LV Directive 73/23/EEC as amended by Directive 93/68/EEC
- The Machinery Directive 98/37/EC
- The Noise Directive 2000/14/EC as amended
- The Gas Act 1986 (Natural Gas Generator Sets)

3.3 Build Standards

The generator set and its control system have been designed, constructed and tested generally in accordance with the following Standards where applicable:

BS 4999 (IEC 60034[1])	General requirements for rotating electrical machines
BS 5000-3:2006 (IEC 60034[1])	Rotating electrical machines of particular types or for particular applications
BS ISO 3046-3:2006[2]	Reciprocating internal combustion engines: performance
BS 7671:2001	Requirements for electrical installations IEE Wiring Regulations (16th Edition)
BS ISO 8528[2]	Reciprocating internal combustion engine driven alternating current generating sets
BS EN 61000-6-2:1999 (IEC61000-6-2:1999[2])	Electromagnetic compatibility. Generic emission standard
BS EN 61000-6-4:2007	Electromagnetic compatibility. Generic immunity standard
BS EN 60439 (IEC 60439[2]) (EN 60439[2])	Specification for low-voltage switchgear and control gear assemblies
BS EN 60947-1:2007 (IEC 947[1]) (EN 60947[2])	Specification for low voltage switchgear and control gear
BS EN 60204-1:2006	Safety of Machinery – Electrical Equipment of Machines
UL 508A	Specification for Control Panels

1. A related, but not equivalent, standard: A BSI publication, the content of which to any extent at all, short of complete identity or technical equivalence, covers subject matters similar to that covered by a corresponding international standard.
2. An identical standard: A BSI publication identical in every detail with a corresponding international standard.

SECTION 4 – SAFETY PRECAUTIONS

4. Safety Precautions

4.1 General

WARNING: RISK OF INJURY

On generator sets that can be started automatically or from a remote location, a warning plate should be displayed prominently indicating, pictorially, to personnel that the set may start automatically without warning.

Appropriate personal protective equipment should be worn when working on the generator set or on any associated equipment.

Information on first aid procedures and facilities should be displayed near the set.

The area around the generator set should be clear of obstructions and dangerous objects. In addition, the floor should be kept clean, dry and clear of oil deposits.

Maintenance work, particularly in confined areas, should be carried out by a minimum of two operators working together.

Never lift the generator set using the engine or alternator lifting lugs. Refer to the lifting recommendation drawings and/or Installation Manual for further details.

Caution: If fork-lift pockets have been provided to re-position the generator set, ensure that the forks of the fork-lift truck are at right angles to the bedframe before inserting them into the pockets provided.

Only lifting devices of suitable capacity should be used.

WARNING: TO COMPLETE MAINTENANCE TASKS AT HEIGHT REFER TO LOCAL LEGISLATIVE REQUIREMENTS. SUITABLE EQUIPMENT FOR PERFORMING THESE TASKS MUST BE USED IN ACCORDANCE WITH THE LOCAL GUIDELINES AND LEGISLATION. FAILURE TO FOLLOW THESE INSTRUCTIONS CAN RESULT IN SEVERE PERSONAL INJURY OR DEATH.

WARNING: LIFTING AND REPOSITIONING ON THE GENERATOR SET MUST ONLY BE CARRIED OUT USING SUITABLE LIFTING EQUIPMENT, SHACKLES AND SPREADER BARS IN ACCORDANCE WITH LOCAL GUIDELINES AND LEGISLATION BY SUITABLY TRAINED AND EXPERIENCED PERSONNEL. INCORRECT LIFTING CAN RESULT IN SEVERE PERSONAL INJURY, DEATH AND/OR EQUIPMENT DAMAGE. FOR MORE INFORMATION CONTACT YOUR AUTHORISED DISTRIBUTOR.

4.2 Electrical Hazards

WARNING: RISK FROM ELECTRIC SHOCK

Before carrying out any maintenance, isolate all supplies to the generator set and any control panels. Render the set inoperative by disconnecting the plant battery – refer to Section 2.2.4 - Supply Isolation. See also the Operation and Maintenance Manuals supplied with the set.

Only suitably trained and qualified engineers, who are authorised to do so, should connect the generator set load, operate or perform maintenance on the set. Connection must also be in compliance with relevant codes and standards.

The generator set should only be connected to loads compatible with its electrical characteristics and rated output.

Medium or high voltage acts differently than low voltage. Special equipment and training is required to work on, or around, medium or high voltage equipment. Do not work on energized equipment. Due to the nature of medium or high voltage electrical equipment, induced or residual voltage remains even after the equipment is disconnected from the power source.

The metalwork of the generating set, bed frame and other exposed parts must be bonded to an effective earth point.

Do not touch any electrically energised part of the generator set or cables/conductors with any part of the body or with any non-electrically insulated object.

Do not operate the generator set with any terminal box cover open.

Ensure that all connections are insulated.

Ensure that all electrical equipment and connections are kept clean and dry.

Replace any defective terminal covers and wiring immediately and ensure that all terminations are secure.

Reinstate all protective devices removed or disconnected during maintenance or overhaul, before putting the generator set back into service.

The appropriate neutral earthing requirements must be complied with, or adequate means incorporated to ensure that an isolated neutral system is adequately protected against voltage rises and undetected earth faults. In the situation where the generator set is operated in parallel with a network supply, the user must be satisfied that the neutral earthing switch gear (where fitted), is operational and that the associated protection devices are fully functional. Permission must have been obtained from the local electricity supply utility, before parallel operation is considered.

Do not connect generator set directly to any building electrical system. Hazardous voltages can flow from the set into the utility line. This creates a potential for electrocution, or property damage. Connect only through an approved isolation switch or an approved paralleling device.

To prevent irreparable damage to the battery charging system:

- Never disconnect the battery whilst the set is running
- Never disconnect the charging leads whilst the set is running
- Disconnect the battery and charge alternator before electric arc welding on the set

Note: The charge alternator output lead is live at all times.

Follow all applicable electrical safety codes.

Do not work on this equipment when mentally or physically fatigued, or after consuming any alcohol or drug that makes the operation of equipment unsafe.

4.3 Engine Waste

WARNING; INCORRECT DISPOSAL OF ENGINE WASTE IS ENVIRONMENTALLY HARMFUL AND PRESENTS A HEALTH RISK.
SOME ENGINE WASTE IS COMBUSTIBLE AND IS THEREFORE A FIRE RISK.

Dispose of unwanted or absorbed substances through an authorised contractor who will transport and correctly dispose of the waste to a licensed site.
For further information refer to Section 5 - Substances Hazardous to Health.

4.4 Exhaust Gas Hazards

WARNING: RISK FROM TOXIC FUMES

Exhaust fumes are toxic and all necessary measures must be taken to ensure that they do not escape into, or re-circulate within, the plant room or associated buildings. Exhaust gases contain carbon monoxide, an odourless and colourless gas. Carbon monoxide is poisonous and can cause unconsciousness and death. Symptoms include: dizziness; nausea; headache; sleepiness; inability to think coherently. Persons affected should seek fresh air immediately and be kept active. If symptoms persist, seek medical attention. Shut down the generator set and do not operate until it has been inspected and repaired.

Visually and audibly inspect the exhaust system. Ensure that all exhaust components are secured and true (not warped).

Do not use exhaust gases to heat a compartment.

Ensure that the generator set is kept well ventilated. Thoroughly ventilate the plant room to remove all fumes and explosive vapours **before** disconnecting or connecting battery cables thus reducing the possibility of accidental sparks causing an explosion.

Ensure that the exhaust outlet is kept free from obstruction.

Should repeated attempts to start the engine fail, unburnt fuel gas may build up in the exhaust system creating a potentially dangerous situation. Allow these gases to disperse before carrying out further attempts to start.

4.5 Natural Gas

WARNING: RISK OF ASPHYXIATION AND EXPLOSION

Natural gas is dangerous if leakage occurs. Relatively low levels of gas leakage in confined areas can cause explosions if ignited.

Inhalation of large volumes of natural gas can cause asphyxiation and death. If leakage occurs isolate the gas supply, do not operate any equipment (electrical or otherwise) that may cause a spark or may be a source of ignition, evacuate the building and fully ventilate the area. Only suitably qualified personnel who are fully trained to handle natural gas emergencies are to be allowed near the plant room or generator set(s) in such emergencies.

Ensure that gas pipes and gas trains are installed in compliance with relevant codes, standards and local requirements.

Welding equipment, blowlamps and any other source of ignition that may cause natural gas to ignite should **not** be used in the Plant Room unless all gas pipes have been purged.

Incomplete or unsealed gasways should never be left unattended without all reasonable precautions being taken to inform others of the disconnection and potential danger i.e. Warning Signs etc. Metal pipes should **always** be sealed with metal pipe fittings.

Electrical earth bonding on all gas pipes and gas components should be regularly checked for security and good electrical contact.

If a gas leak is suspected:

- Do not operate any electrical equipment or switches in the plant room, these can cause sparks.
- Immediately evacuate all personnel from the plant room and then ventilate the building.
- Shutdown the generator set(s) by fully shutting the gas train shut-off valve(s).
- Fully shut all external gas supply valves to the generator set(s).
- Alert the emergency services and local gas supplier.

4.6 Fire Hazards

WARNING: RISK OF FIRE

With the use of fuel, lubricating oils and batteries there is a fire hazard. Naked flames or sparks should not be allowed near the generator set, fuel tank, gas train and batteries. Explosive fuel and oil vapours are always present in the vicinity of a generator set, while a battery on charge can produce inflammable hydrogen gas.

Leakage of Natural Gas, at relatively low levels and in confined areas, can cause explosions and fires if ignited.

An area in the vicinity of the generator set should be designated a NO SMOKING area and one that is prohibited to unauthorised persons.

Ensure that adequate ventilation is maintained within the plant room at all times. Thoroughly ventilate the plant room to remove all fumes and explosive vapours **before** disconnecting or connecting battery cables thus reducing the possibility of accidental sparks causing an explosion.

Providing suitable bunding to contain any spillage or leakage from the generator set is the responsibility of others. The volumes of fluids involved can be established from the data supplied with the set.

No loose items of equipment or combustible material should be left on or near any part of the generator set. Remove all unnecessary oil and grease from the unit and clean up fuel and oil spills immediately.

In the event of a fuel or oil leak, the spillage should be absorbed using a proprietary material (e.g. Fuller's Earth granules, or similar). Sawdust should not be used, as this will create a fire hazard. Appropriate fire fighting equipment should be readily available - (class A, B and C [dry powder] type fire extinguishers are recommended).

Inspect the fuel system before each operation and periodically while running.

Do not refill the fuel tank while the generator set is running, unless the tanks are outside the engine compartment. Fuel contact with a hot engine or exhaust is a potential fire hazard.

Keep a fire extinguisher available in or near the plant room and in other areas throughout the site. Use the correct extinguisher for the area.

4.7 Fluids

WARNING: RISK OF TOXIC CHEMICALS

There is a health risk associated with exposure to fuel, lubricating oils, coolant additives and battery electrolyte. Avoid contact with these fluids and always wear the appropriate personal protective equipment. Reference should be made to Section 5 for general information and to the Material Safety Data Sheets (MSDS) obtainable from the relevant suppliers/manufacturers.

Benzene and lead, found in some diesel oils, have been identified as causing cancer or reproductive toxicity. When checking, draining or adding diesel, take care not to ingest, breathe the fumes, or contact the diesel.

Used engine oils have been identified as causing cancer or reproductive toxicity. When checking or changing engine oil, take care not to ingest, breathe the fumes or contact used oil.

Avoid fluid spillage and discard clothing contaminated by fuel oil, coolant, lubricants or battery electrolyte.

Ensure that remote fuel storage systems are installed in compliance with relevant codes, standards and local requirements.

Fuel lines must be adequately secured and free of leaks. Fuel connection to the engine should be made with an approved flexible line. Do not use zinc coated or copper fuel lines with diesel fuel.

Ensure all fuel supplies have a positive shut-off valve.

The user should also contact their supplier of fluids used in the generator set for Manufacturers' recommendations on Health and Safety.

4.8 High Temperature Hazards

WARNING: RISK OF BURNING AND SCALDING

While the generator set is running, and for a period following shutdown, avoid contact with exhaust, radiator and other components that are likely to become hot. At all times, avoid contact with hot oil, hot coolant and hot exhaust gases.

Hot coolant is under pressure. DO NOT attempt to remove a radiator or heat exchanger pressure cap while the generator set is running. Always allow the set to cool completely before doing so.

DO NOT drain coolant or lubricating oil until the generator set has cooled completely.

4.9 Moving Part Hazards

WARNING: RISK OF INJURY

Safety guards and covers must be securely fitted and all cubicle doors, cover-plates, etc, should be firmly in place while the generator set is in operation.

Keep hands and loose clothing away from moving parts. Do not wear jewellery while servicing any part of the generator set.

Never step on the generator set. It can stress and break unit components, possibly resulting in dangerous operating conditions – from leaking fuel, leaking exhaust fumes, etc.

Before performing any maintenance on the generator set, disconnect its batteries to prevent accidental starting. Thoroughly ventilate the plant room to remove all fumes and explosive vapours **before** disconnecting or connecting battery cables thus reducing the possibility of accidental sparks causing an explosion.

Avoid contact with any moving part.

4.10 Noise

WARNING: RISK OF DAMAGE TO HEARING

Generator sets emit noise. Ensure that the doors of any enclosure, or room that contains a generator set, display a suitable pictogram warning that hearing protection must be worn. It is the responsibility of personnel exposed to noise to ensure that they are provided with suitable ear protection, e.g. ear defenders.

Whilst there is a correlation between the emission and exposure levels, this cannot be used reliably to determine whether or not further precautions are required. Factors that influence the actual level of exposure of work-force include the characteristics of the work room, the other sources of noise, etc. i.e. the number of machines and other adjacent processes, and the length of time for which an operator is exposed to the noise. Also the permissible exposure level can vary from country to country.

Information on noise emissions can be found in the Engine Operator Manual supplied with your generator set. The figures quoted are emission levels and are not necessarily safe working levels.

SECTION 5 - SUBSTANCES HAZARDOUS TO HEALTH

5. Substances Hazardous to Health

The generator set(s) covered by this manual contains several substances that require special consideration when handling to avoid becoming hazardous to health and safety.

Operators of generating plant and machinery must obtain the relevant suppliers' Material Safety Data Sheets, and information/instructions therein should take precedent over the information provided within this document. In the absence of the suppliers' information, the following information may be used on a temporary basis only. In addition to preventing hazards to personal health, these instructions are designed to minimise environmental damage and pollution.

The information contained herein is based on the data available to us. It is the responsibility of the user to comply with any relevant laws and regulations that may exist.

5.1 Antifreeze (Fleetguard – ES compleat/EG premix)

This antifreeze is also known as an ethylene glycol based coolant; summer coolant; coolant additive. It is a purple coloured, viscous liquid, with a mild chemical odour, is soluble in water and harmful. It contains ethylene glycol, and diethylene glycol. Ethylene glycol is a potentially hazardous constituent.

The substance has a boiling point of 107°C, and a flash point of 121°C.

It is used as an engine coolant additive, and can be found in engine cooling systems, and heat exchangers. Installers, operators and maintainers are likely to encounter this substance.

5.1.1 Hazardous Reactions

Ethylene glycol is combustible when exposed to heat or flame and can react vigorously with oxidants. Moderate explosive hazard in form of vapour when exposed to heat or flame. Hazardous products resulting from combustion or decomposition include carbon monoxide, carbon dioxide and acrid smoke. Self-contained breathing apparatus must be worn in the event of fume build up.

Avoid strong oxidising agents – incompatible with sulphuric acid, nitric acid, caustics and aliphatic amines.

It may cause neurological signs and symptoms, and kidney damage. It is also a skin and eye irritant.

Very toxic in particulate form upon inhalation. Harmful if swallowed, lethal dose for humans reported to be 100ml.

5.1.2 Protective Measures

Refrain from eating, drinking or smoking when using the product. Adopt a high standard of personal hygiene. In case of skin contact, wash immediately with soap and water.

Ensure good ventilation and avoid heat sources. Avoid breathing mist, if there is a risk of vapour, or particulate, use a suitable organic vapour mask.

Eye protection, gloves, overalls, impervious apron should be used. Avoid contamination inside the gloves. If overalls become contaminated, discontinue use and clean thoroughly.

5.1.3 Storage / Transport

Store and transport only in correctly marked containers. Keep containers closed when not in use. Keep cool, out of sunlight, away from naked flames and strong acids, do not freeze. Store well away from food-stuffs and drinking water. Take special care to avoid discharge into drains, sewers and water-courses.

Contain leak/spill with sand, earth or non-combustible, absorbent material to prevent entry of substance into drainage/sewerage system, water-courses and land. Eliminate all ignition sources, use plastic shovel to transfer to suitable container and dispose of unwanted or absorbed substance through an authorised contractor to a licensed site.

5.1.4 Emergency Action

- Fire

  Extinguishing media: CO_2, alcohol resistant foam, dry powder, or water spray.

  Fire fighters to use self contained breathing apparatus. Keep fire exposed containers cool. Prevent run-off from entering waterways, drains and drinking water supplies.

- Ingestion

  Toxic by ingestion. If swallowed induce vomiting **only** under the advice of a Doctor or poison control centre.

  Delayed treatment may result in fatality.

- Inhalation (of vapour)

  Remove from further exposure. In case of irritation to lungs or throat, seek medical advice.

- Aspiration (inhalation of liquid)

  Obtain immediate medical assistance.

- Eyes

  Flush copiously with water or preferably eye-wash solution for at least five minutes. Seek medical advice.

- Skin

  Wash thoroughly with soap and water, and seek medical attention if irritation develops. Change clothing if necessary and wash before re-use.

- Spillage

  Soak-up using an absorbent material and dispose of this as directed under Storage/Transport (Section 5.1.3).

5.2 Antifreeze (Valvoline coolant premix)

This antifreeze is a green, viscous liquid, which is practically odourless, and soluble in water. It contains ethylene glycol, and diethylene glycol. Ethylene glycol is a potentially hazardous constituent.

The substance has a boiling point between 171-203°C, with a flash point of 118°C, and a vapour pressure of 0.4mm Hg at 20°C.

It is used as an engine coolant additive, and can be found in engine cooling systems, and heat exchangers. Installers, operators and maintainers are likely to encounter this substance.

5.2.1 Hazardous Reactions

This product is considered stable but must be kept away from oxidising agents.

In the event of a fire, or excessive heat, there is a risk of the containing drum bursting.

At elevated temperatures vapour, or particulate, may irritate respiratory tract and continued exposure is reported to induce unconsciousness. Harmful, or fatal, if swallowed. Contact may cause skin sensitisation.

5.2.2 Protective Measures

Refrain from eating, drinking or smoking when using the product. Adopt a high standard of personal hygiene. In case of skin contact, wash with soap and clean water.

Ensure good ventilation and avoid heat sources. If there is a risk of vapour, or particulate, use a suitable organic vapour mask.

Use eye protection, rubber or PVC gloves, overalls, impervious apron. Avoid contamination inside the gloves. If overalls become contaminated, discontinue use and clean thoroughly.

5.2.3 Storage / Transport

Store and transport only in correctly marked containers. Keep containers closed when not in use. Keep cool, out of sunlight and away from naked flames. Store well away from food-stuffs and drinking water. Take special care to avoid discharge into drains, sewers and water-courses.

Contain leak/spill with sand or earth, and prevent entry of substance into drainage/sewerage system, water-courses and land. Dispose of unwanted or absorbed substance through an authorised contractor to a licensed site.

5.2.4 Emergency Action

- Fire

  Extinguishing media:
  Large fires - alcohol resistant foam, or water fog.
  Small fires - CO_2, alcohol resistant foam, dry chemical, sand, earth or water fog.

  Fire-fighters to use self contained breathing apparatus. Keep fire exposed containers cool. Prevent run-off from entering waterways, drains and drinking water supplies.

- Ingestion

  Harmful or fatal if swallowed. Rinse mouth with water. If conscious, give water to drink and obtain medical advice.

- Inhalation (of vapour)

  Remove from further exposure. In case of irritation to lungs or throat, seek medical advice.

- Aspiration (inhalation of liquid)

  Obtain immediate medical assistance.

- Eyes

  Flush copiously with water or preferably eye-wash solution for at least fifteen minutes. If irritation persists seek medical advice.

- Skin

  Wash thoroughly with soap and water, and seek medical attention if irritation develops. Change clothing if necessary and wash before re-use.

- Spillage

  Soak-up using an absorbent material and dispose of this as directed under Storage/Transport (Section 5.2.3).

5.3 Antifreeze (Valvoline – MPG Coolant 50/50)

This antifreeze is also known as a propylene glycol based coolant. It is a colourless liquid with a mild odour, and although soluble in water should be used undiluted. It contains 2-propane diol, ethylhexanoic acid (sodium salt), and aliphatic acid. 2-propane diol, and ethylhexanoic acid are considered to be potentially hazardous constituents.

The substance has a flash point of 112°C min.

It is used as an engine coolant, suitable for open and closed cooling systems, and can be found in the engine cooling system. Installers, operators and maintainers are likely to encounter this substance.

5.3.1 Hazardous Reactions

This product is considered stable but must be kept away from strong oxidizing agents, acids, and sources of ignition. Oxides of carbon, aldehydes and ketones are products of decomposition.

Prolonged contact, as with clothing wetted with the substance, may cause more severe irritation and discomfort, seen as local redness and swelling.

If more than several mouthfuls are swallowed, abdominal discomfort, nausea and diarrhoea may occur.

5.3.2 Protective Measures

Refrain from eating, drinking or smoking when using this product. Adopt a high standard of personal hygiene. In the case of skin contact, wash with soap and water. Cold water may be used.

Ensure good ventilation and avoid heat sources. Wear appropriate respirator when ventilation is inadequate.

Use a lab coat, impervious gloves and eye protection. Avoid contamination inside the gloves and if clothes become contaminated, discontinue use and clean thoroughly.

5.3.3 Storage / Transport

Store and transport only in correctly marked, tightly closed, containers. Keep cool, out of sunlight and away from naked flames. Keep away from incompatibles such as oxidizing agents, and acids. Water contamination should be avoided.

Absorb any leak/spill with an inert material and put the spilled material in an appropriate waste disposal container. Dispose of unwanted or absorbed substance through an authorized contractor to a licensed site. Finish cleaning by spreading water on the contaminated surface and allow to evacuate through the sanitary system.

5.3.4 Emergency Action

- Fire

  Extinguishing media: Use water fog, dry powder, foam or carbon dioxide. Water or foam may cause frothing. If a leak or spill has not ignited, use water fog to disperse the vapours. Do not use a water jet.

  Fire-fighters to use self contained breathing apparatus. Keep fire-exposed containers cool. Prevent large quantities from entering waterways, drains and drinking water supplies.

- Ingestion

  If patient is conscious and can swallow, give two glasses of water (500ml). Induce vomiting as directed by medical personnel.

- Inhalation (of vapour)

  If irritation, headache, nausea or drowsiness occurs, remove to fresh air. Get medical attention if breathing becomes difficult, or symptoms persist.

- Aspiration (inhalation of liquid)

  Obtain immediate medical assistance.

- Eyes

  Flush eyes with plenty of water for several minutes. Get medical attention if eye irritation persists.

- Skin

  Wash thoroughly with soap and water for several minutes. Get medical attention if skin irritation develops or persists.

- Spillage

  Contain spill if possible, and dispose of as directed under Storage/Transport (Section 5.3.3).

5.4 Antifreeze (Valvoline – MPG Coolant 67/33)

This antifreeze is also known as a propylene glycol based coolant. It is a colourless liquid with a slight characteristic odour, easily soluble in cold water. It contains 2-propane diol, ethylhexanoic acid (sodium salt), and aliphatic acid. 2-propane diol, and ethylhexanoic acid are considered to be potentially hazardous constituents.

It has a boiling point greater than 120°C (248°F) and a flash point Closed Cup greater than 115°C (239°F).

It is used as an engine coolant, suitable for open and closed cooling systems, and can be found in the engine cooling systems. Installers, operators and maintainers are likely to encounter this substance.

5.4.1 Hazardous Reactions

This product is considered stable but must be kept away from strong oxidizing agents, acids and sources of ignition. Carbon oxides (CO, CO2) and water, and some metallic oxides are products of decomposition.

Prolonged contact, as with clothing wetted with the substance, may cause more severe irritation and discomfort, seen as local redness and swelling.

If more than several mouthfuls are swallowed, abdominal discomfort, nausea and diarrhoea may occur.

Contains material which may cause birth defects based on animal data.

5.4.2 Protective Measures

Refrain from eating, drinking or smoking when using this product. Adopt a high standard of personal hygiene. In the case of skin contact, wash with soap and water. Cold water may be used.

Ensure good ventilation and avoid heat sources.

Wear appropriate respirator when ventilation is inadequate. Use a lab coat, impervious gloves and eye protection. Avoid contamination inside the gloves and if clothes become contaminated, discontinue use and clean thoroughly.

5.4.3 Storage / Transport

Store and transport only in correctly marked, tightly closed, containers. Keep cool, out of sunlight and away from sources of ignition. Keep away from incompatibles such as oxidizing agents, and acids. Water contamination should be avoided.

Absorb with an inert material and put the spilled material in an appropriate waste disposal container. Dispose of unwanted or absorbed substance through an authorized contractor to a licensed site. Finish cleaning by spreading water on the contaminated surface and allow to evacuate through the sanitary system.

5.4.4 Emergency Action

- Fire

  Extinguishing media:
  Small Fire - Use dry chemical powder, or CO2.
  Large Fire – Use water spray, fog or foam. Do not use a water jet.

  Fire-fighters to use self contained breathing apparatus and full turnout gear. Keep fire-exposed containers cool. Prevent large quantities from entering waterways, drains and drinking water supplies.

- Ingestion

  Do not induce vomiting unless directed to do so by medical personnel. Loosen tight clothing such as a collar, tie, belt or waistband. Get medical attention if symptoms appear.

- Inhalation (of vapour)

  If inhaled, remove to fresh air. If not breathing, give artificial respiration. If breathing is difficult, give oxygen. Obtain medical attention.

- Aspiration (inhalation of liquid)

  Obtain immediate medical assistance.

- Eyes

  Flush eyes with plenty of water for minimum of fifteen minutes. Cold water may be used. Obtain medical attention.

- Skin

  Wash thoroughly with soap and water for several minutes. Get medical attention if skin irritation develops. Cold water may be used.

- Spillage

  Contain spill if possible, and dispose of as directed under Storage/Transport (Section 5.4.3).

5.5 Coolant Treatment – Water Filter

Fleetguard DCA-4/powder/paste/pellet is also known as a coolant additive, or engine coolant treatment. It is a white solid (powder or pellet) or blue paste inside a filter container, having a mild chemical odour, and soluble in water. It contains dipotassium phosphate, potassium nitrate, sodium molybdate, sodium nitrite, mercaptobenzo thiazole, sodium silicate. Potentially hazardous constituents are alkaline salts, nitrates, nitrites, etc.

For industrial use only it is used as an engine coolant additive and as such it is used in engine cooling systems, heat exchangers, and radiators. Installers, operators and maintainers are likely to encounter these substances.

5.5.1 Hazardous Reactions

Incompatible with strong acids and oxidising materials. In contact with strong acids may form nitrous oxide gas.

Contact of sodium nitrate with combustible materials and organic matter may cause fire. Sodium nitrite intensifies fires of other materials. When heated to decomposition, No_x and K_2O emitted.

Dust may irritate nasal passages. Prolonged or repeated contact with the skin will cause irritation. Will irritate eyes on contact. Harmful if swallowed.

5.5.2 Protective Measures

Adopt a high standard of personal hygiene. In case of skin contact wash immediately with soap and water.

Ensure good ventilation and avoid heat sources.

Use eye protection, dust mask, PVC gloves, overalls and plastic aprons. Avoid contamination inside the gloves. If overalls become contaminated, discontinue use and clean thoroughly. Use a respirator to avoid inhalation of dust.

5.5.3 Storage / Transport

Store and transport only in correctly marked containers. Keep cool, out of sunlight and away from naked flames. Keep product dry and container closed when not in use. Store well away from food-stuffs and drinking water. Take special care to avoid discharge into drains, sewers and water-courses.

Sweep up and return to container for use if not contaminated. Prevent entry of substance into drainage/sewerage system, water-courses and land. Dispose of unwanted substance through a licensed chemical disposal service.

5.5.4 Emergency Action

- Fire

  Extinguishing media: CO_2, dry powder, water.

  Fire-fighters to use self contained breathing apparatus. Keep fire exposed containers cool. Prevent run-off from entering waterways, drains and drinking water supplies.

- Ingestion

  Toxic by ingestion. Seek medical advice immediately.

- Inhalation (of vapour)

  Remove from further exposure. In case of irritation to lungs or throat, seek medical advice.

- Eyes

  Flush copiously with water for at least fifteen minutes. Seek medical advice immediately.

- Skin

  Wash immediately with soap and water. Seek medical advice If irritation develops or persists. Change clothing if necessary and wash before re-use.

- Spillage

  Sweep up and return to container if not contaminated. Discard contaminated product as directed under Storage/Transport (Section 5.5.3).

5.6 Coolant Treatment - Liquid Additive

Fleetguard DCA-4 Liquid is also known as a coolant additive, or liquid cooling conditioner. It is a pale blue liquid with a mild chemical odour. It contains potassium phosphate, potassium nitrate, sodium molybdate, sodium nitrite, adipic acid. The potentially hazardous constituents being alkaline salts, nitrates, nitrites, etc.

This substance has a boiling point of 100°C; vapour pressure of 760mm Hg at 100°C, and is soluble in water.

It is used as an engine coolant additive, and can be found in engine cooling systems, heat exchangers, and radiators. Installers, operators and maintainers are likely to encounter this product.

5.6.1 Hazardous Reactions

Sodium nitrite/potassium nitrate are strong oxidisers. Avoid organic matter (including wood), cyanides, strong acids, salts and urea. This product may ignite with heat or friction. When heated to decomposition, No_x, K_2O, sodium monoxide, carbon monoxide and carbon dioxide are emitted.

Contact will cause irritation to both skin and eyes. Inhalation may cause nasal passage and upper respiratory tract irritation. Ingestion can cause severe vomiting, shock and death. Ingestion of sodium nitrite can result in motor activity changes, coma, and decreased blood pressure.

5.6.2 Protective Measures

Adopt a high standard of personal hygiene. In case of skin contact irrigate with copious quantities of clean water.

Ensure good ventilation and avoid heat sources. Avoid breathing mist. Observance of good housekeeping rules will ensure general safety.

Use eye protection goggles, PVC gloves, overalls, impervious apron. Avoid contamination inside the gloves. If overalls become contaminated, discontinue use and clean thoroughly. No special respiratory precautions are necessary in normal use.

5.6.3 Storage / Transport

Store and transport only in correctly marked containers. Keep cool (but do not freeze), out of sunlight and away from naked flames and strong acids. Keep product container closed when not in use. Store well away from food-stuffs and drinking water. Take special care to avoid discharge into drains, sewers and water-courses.

Prevent entry of liquid into drainage/sewerage system, water-courses and land. Use industrial absorbent and place in suitable container. Dispose of unwanted liquid through an authorised contractor to a licensed chemical disposal service.

5.6.4 Emergency Action

- Fire

  Extinguishing media: Water, carbon dioxide, dry powder.

  Fire fighters should wear self-contained breathing apparatus. Keep fire exposed containers cool. Prevent run-off from entering waterways, drains and drinking water supplies.

- Ingestion

  Toxic by ingestion. Ingestion can cause severe vomiting, shock and death. Ingestion of sodium nitrite can result in motor activity changes, coma, and decreased blood pressure.

  Seek medical advice immediately.

- Inhalation (of vapour)

  Remove to fresh air. If symptoms persist seek medical advice.

- Eyes

  Flush copiously with water for at least fifteen minutes. Seek medical advice immediately.

- Skin

  Wash immediately with soap and water. If irritation develops or persists seek medical advice. Change clothing if necessary and wash before re-use.

- Spillage

  Contain leak/spill and prevent entry of liquid into drainage/sewerage system, water-courses and land. Use industrial absorbent and dispose of as directed under Storage/Transport (Section 5.6.3).

5.7 Gas Oil

This product is also known as Red Diesel, Fuel Oil, and type A1 or A2. It can be pale red or a clear liquid with a characteristic mild odour. It contains catalytically cracked oil, petroleum distillates, quinizarin, and gas oil marker dye red. The catalytically cracked oil and petroleum distillates are potentially hazardous constituents.

The substance has an initial boiling point of 180°C, a flash point greater than 56°C, and a vapour pressure less than 0.7mm Hg at 20°C and has negligible solubility in water.

It is used as a fuel for off-road diesel powered vehicles and stationary engines, and can be found in fuel tanks, pipes and injection systems. The substance should not be used for any other purpose without contacting the manufacturer or supplier. Installers, operators and maintainers are likely to encounter this substance.

5.7.1 Hazardous Reactions

This liquid is flammable. Avoid smoking, heat sources, such as welding and naked flames, sparks and static electricity build-up. Thermal decomposition products are hazardous, containing CO_x, NO_x and SO_x compounds.

The vapour is explosive. High vapour concentrations can cause respiratory irritation, dizziness, nausea, and loss of consciousness. Excessive and prolonged exposure to the mist can cause chronic inflammatory reaction of the lungs and a form of pulmonary fibrosis.

Avoid strong oxidising agents, e.g. chlorates which may be use in agriculture.

Gas oil is slightly irritating to the skin and has a de-fatting action. Toxicity following single exposure to high level of gas oil is of low order. Prolonged, repeated skin contact may de-fat the skin resulting in possible skin irritation and dermatitis. In some cases warty, cancerous growths have occurred.

5.7.2 Protective Measures

Ensure good ventilation and avoid heat sources. Observance of good housekeeping rules will ensure general safety. Do not smoke. Avoid breathing mist.

When working on, or testing, injection equipment, special care is required to avoid perforation of skin by high pressure fuel. Use eye protection in the event of a suspected high pressure leak.

Adopt a high standard of personal hygiene. In the case of skin contact, wash well with soap and water.

Use gloves and overalls, and eye protection goggles if there is risk of splashing. Use oil impervious gloves and avoid contamination inside the gloves. If overalls become contaminated, discontinue use and clean thoroughly. Contaminated clothing should be removed, soaked with water, and laundered before re-use.

No special respiratory precautions are necessary in normal use.

DO NOT use as a solvent for removing dirt/grease etc, from skin.

5.7.3 Storage / Transport

Store and transport only in correctly marked containers. Keep containers closed when not in use. Keep cool, out of sunlight and away from naked flames. Electrical continuity is required between the transport and storage vessels during product transfer.

Contain leak/spill with sand, earth or other suitable material, and prevent entry of substance into drainage/sewerage system, water-courses and land. Dispose of unwanted or absorbed substance through an authorised contractor to a licensed site.

Inform local and fire authorities should the product reach waterways, drains etc.

5.7.4 Emergency Action

- Fire

  Extinguishing media:

  Large fire – Foam/water fog. Never use water jet.
  Small fire - foam/dry powder, AAAF, CO_2, sand, earth.

  Avoid making sparks. Fire fighters to use self-contained breathing apparatus. Keep fire exposed containers cool, using water fog/spray. Prevent run-off from entering waterway, drains and drinking water supplies.

- Ingestion

  Do not induce vomiting. Wash the mouth out with water, and send to hospital immediately.

- Inhalation (of vapour)

  Remove from further exposure. Obtain medical assistance immediately.

- Aspiration (inhalation of liquid)

  If, following ingestion of gas oil, vomiting occurs, there is danger of aspiration into the lungs. This would cause intense local irritation and chemical pneumonitis that can be fatal. Obtain immediate medical assistance.

- Eyes

  Irrigate copiously with water or preferably eye-wash solution for at least five minutes. If irritation persists seek medical advice.

- Skin

  Wash thoroughly with soap and water. Change clothing if necessary.

  If high pressure injection has occurred prompt surgical attention is required.

- Spillage

  Absorb using sand, earth or other suitable material. Dispose of unwanted or absorbed flammable material as directed under Storage/Transport (Section 5.7.3).

5.8 Grease – Chevron SRI No. 2

This is formulated with ISOSYN® base stocks, a synthetic polyurea ashless organic thickener, and high performance rust and oxidation inhibitors. Its texture is smooth and buttery and its colour is dark green. All the components of this material are in compliance with the EU Seventh Amendment Directive 92/32/EEC.

The substance has a boiling point >371.1°C (700°F) and is insoluble in water but soluble in hydrocarbons. The substance has a flash point (Cleveland Open Cup) 260°C (500°F) (Min).

It is a high temperature ball and roller bearing grease and is used in generators, alternators, starters, air-conditioning units and unsealed electric motor bearings operating under moist conditions. Installers, operators and maintainers are likely to encounter this product.

5.8.1 Hazardous Reactions

This product is considered to be stable under normal ambient and anticipated storage and handling conditions of temperature and pressure. May react with strong oxidizing agents such as chlorates, nitrates, peroxides etc. There are no known results of decomposition and none are expected.

This material will burn although it is not easily ignited. Dependent on combustion conditions a complex mixture of airborne solids, liquids, and gases including carbon monoxide, carbon dioxide, and unidentified organic compounds will be evolved. Combustion may form oxides of Nitrogen, Zinc, and Magnesium.

Note: *Do not use pressure to empty drum or explosion may result.*

Electrostatic charge may accumulate and create a hazardous condition when handling this material. To minimize this hazard, bonding and grounding may be necessary but may not, by themselves, be sufficient. Review all operations which have a potential of generating an accumulation of electrostatic charge.

5.8.2 Protective Measures

Ensure good ventilation and avoid heat sources. Prevent small spills and leakages to avoid the hazard of slipping.

Adopt a high standard of personal hygiene. In the case of skin contact, apply a waterless hand cleaner, mineral oil or petroleum jelly then wash thoroughly with soap and water.

No special respiratory precautions are necessary in normal use and with adequate ventilation. If prolonged or repeated skin contact is likely, oil impervious gloves MUST be worn, and eye protection should be used.

High pressure injection under the skin may occur due to the rupture of pressurised lines.

5.8.3 Storage/Transport

Store and transport only in correctly marked containers. Keep containers closed when not in use. Store away from heat, sparks, flame or strong oxidants and combustible materials.

Contain leak/spill and prevent entry of substance into drainage/sewerage system, water-courses and land. Dispose of unwanted or absorbed substance through an authorised contractor to a licensed site.

5.8.4 Emergency Action

- Fire

  Extinguishing media: CO_2, foam, dry powder, and water fog.

  In enclosed areas fire-fighters MUST use self-contained breathing apparatus. Keep fire exposed containers cool. Prevent run-off from entering waterway, drains and drinking water supplies.

- Unusual Fire/Explosion Hazard

  Do not use pressure to empty drum or explosion may result.

- Ingestion

  If swallowed, give water or milk to drink. Do not induce vomiting. Seek medical advice.

- Inhalation (of vapour)

  Remove from further exposure. If respiratory discomfort or coughing occurs, seek medical advice.

- Aspiration (inhalation of liquid)

  Obtain immediate medical assistance.

- Eyes

  Irrigate copiously with water or preferably eye-wash solution for at least fifteen minutes. If irritation persists seek medical advice.

- Skin

  To remove the material from skin, apply a waterless hand cleaner, mineral oil or petroleum jelly then wash thoroughly with soap and water. Remove and clean oil soaked clothing daily and wash affected area.

  In an accident involving high-pressure equipment, this product may be injected under the skin. Such an accident may result in a small, sometimes bloodless, puncture wound. However, because of its driving force, material injected into a fingertip can be deposited into the palm of the hand. Within 24 hours there is usually a great deal of swelling, discolouration, and intense throbbing pain. Immediate treatment at a surgical emergency centre is recommended.

- Spillage

  Eliminate all sources of ignition in vicinity of spilled material. Contain spilled liquid with sand or other suitable absorbent. Dispose of used material as directed under Storage/Transport (Section 5.8.3).

5.9 Grease – Exxon Polyrex® EM

This polyurea grease is formulated with Base oil and additives including Amines, C12-14-ALKYL, 1-5 ISOOCTYL Phosphates. It is blue coloured grease with a mild odour.

The substance has a boiling point of 330°C (626°F) and a flash point of 204°C (400°F) (Estimated for oil, ASTM D-92 [COC]). It is insoluble in water.

It is high temperature ball and roller bearing grease and is used for long-life and corrosion resistance, even in salt water. Installers, operators and maintainers are likely to encounter this product.

5.9.1 Hazardous Reactions

Under normal conditions of use, this product is not considered hazardous. This product is considered to be stable under normal ambient and anticipated storage and handling conditions of temperature and pressure. Keep containers closed when not in use. Store away from heat, strong oxidizing agents and combustible material. Product does not decompose at ambient temperatures, however carbon monoxide, sulphur oxides, aldehydes and other decomposition products may be found in the case of incomplete combustion.

Note: *Empty containers retain residue and may explode causing injury or death. Do not pressurise, or expose to any source of ignition.*

5.9.2 Protective Measures

Ensure good ventilation and avoid heat sources. Prevent small spills and leakages to avoid the hazard of slipping.

Adopt a high standard of personal hygiene. In the case of skin contact, wash thoroughly with soap and water.

No special respiratory precautions are necessary in normal use and with adequate ventilation. If prolonged or repeated skin contact is likely, oil impervious gloves MUST be worn, and eye protection should be used.

High pressure injection under the skin may occur due to the rupture of pressurised lines.

5.9.3 Storage/Transport

Store and transport only in correctly marked containers. Keep containers closed when not in use. Store away from heat, sparks, flame or strong oxidants and combustible materials.

Contain leak/spill and prevent entry of substance into drainage/sewerage system, water-courses and land. Dispose of unwanted or absorbed substance through an authorised contractor to a licensed site.

Do not attempt to refill or clean container. Empty drums should be completely drained, properly closed/sealed and promptly returned to a drum reconditioner. All containers should be disposed of in an environmentally safe manner and in accordance with all applicable regulations.

5.9.4 Emergency Action

- Fire

  Extinguishing media: CO_2, foam, dry powder, and water fog. Water or foam may cause frothing.

  In enclosed areas fire-fighters MUST use self-contained breathing apparatus. Keep fire exposed containers cool. Prevent run-off from entering waterway, drains and drinking water supplies.

- Unusual Fire/Explosion Hazard

  Do not use pressure to empty drum or an explosion may result.

- Ingestion

  Do not induce vomiting. Seek medical advice.

- Inhalation (of vapour)

  Remove from further exposure. If respiratory discomfort or coughing occurs, seek medical advice.

- Aspiration (inhalation of liquid)

  Obtain immediate medical assistance.

- Eyes

  Irrigate copiously with water. If irritation persists seek medical advice.

- Skin

  To remove the material from skin, wash thoroughly with soap and water. Remove and clean oil soaked clothing daily and wash affected area.

  In an accident involving high-pressure equipment, this product may be injected under the skin. Regardless of the appearance of the wound or its size, the individual should be evaluated immediately by a physician as a surgical emergency. Even though initial symptoms from high pressure injection may be minimal or absent, early surgical treatment within the first few hours may significantly reduce the ultimate extent of the injury.

- Spillage

  Eliminate all sources of ignition in vicinity of spilled material. Contain spilled liquid with sand or other suitable absorbent. Dispose of used material as directed under Storage/Transport (Section 5.9.3).

5.10 Grease – Klüber Asonic GHY72

This is Ester oil based grease with polyurea thickener. It is a beige coloured paste having a characteristic odour.

Using the DIN ISO 2176 (BASE OIL) flash method, the substance has a flash point >200°C (392°F).

It is used to lubricate bearings where good resistance to water washout and corrosion are required. Installers, operators and maintainers are likely to encounter this product.

5.10.1 Hazardous Reactions

This product is considered to be stable. However it is incompatible with strong oxidizing agents. In case of fire, carbon monoxide and hydrocarbons can be released.

Prolonged skin contact may cause skin irritation and/or dermatitis.

5.10.2 Protective Measures

Ensure good ventilation and avoid heat sources. Prevent small spills and leakages to avoid the hazard of slipping.

Adopt a high standard of personal hygiene. In the case of skin contact, clean skin thoroughly with soap and water, and apply skin cream.

No special respiratory precautions are necessary in normal use and with adequate ventilation. If prolonged or repeated skin contact is likely, oil impervious gloves MUST be worn, and eye protection should be used.

High pressure injection under the skin may occur due to the rupture of pressurised lines.

5.10.3 Storage/Transport

Store and transport only in correctly marked containers. Keep containers closed when not in use. Store away from heat, sparks, flame or strong oxidants and combustible materials.

Contain leak/spill and prevent entry of substance into drainage/sewerage system, water-courses and land.

The code of waste has to correspond to the Council Directive 75/442/EEC and be specific as far as the related sector and process are concerned. Can be incinerated when in compliance with local, state and federal regulations.

Dispose of unwanted or absorbed substance through an authorised contractor to a licensed site.

Offer rinsed packaging material to local recycling facilities.

5.10.4 Emergency Action

- Fire

  Extinguishing media: CO_2, foam, dry powder, and water fog. High volume water jet is unsuitable as an extinguishing medium.

  In enclosed areas fire-fighters MUST use self-contained breathing apparatus. In case of fire carbon monoxide and hydrocarbons can be released.

  Keep fire exposed containers cool. Prevent run-off from entering waterway, drains and drinking water supplies.

- Ingestion

  Do not induce vomiting. Seek medical advice.

- Inhalation (of vapour)

  Remove from further exposure. If respiratory discomfort or coughing occurs, seek medical advice.

- Aspiration (inhalation of liquid)

  Obtain immediate medical assistance.

- Eyes

  Irrigate copiously with water or preferably eye-wash solution for at least fifteen minutes. If irritation persists seek medical advice.

- Skin

  To remove the material from skin wash thoroughly with soap and water, apply skin cream. Remove and clean oil soaked clothing daily and wash affected area.

- Spillage

  Eliminate all sources of ignition in vicinity of spilled material. Contain spilled liquid with sand or other suitable absorbent. Dispose of used material as directed under Storage/Transport (Section 5.10.3).

5.11 Grease – Mobilgrease XTC

This grease is also known as NLGI No. 1 lithium soap-based product. It is highly viscous, dark brown in colour, and with a mild odour. It contains bitumen or vacuum residue, zinc alkyl and long-chain alkyl dithiophosphates. Based on available information this product is not expected to produce adverse effects on health when used for the intended application and the recommendations provided in the MSDS are followed.

The substance has a boiling point greater than 316°C and has negligible solubility in water. The substance has a flash point greater than 204°C and a vapour pressure of less than 0.1mm Hg at 20°C.

It is for industrial use only and is used in high speed flexible gearing and couplings in industrial situations for high speed and high temperature coupling applications. The use of hand-operated grease guns at low ambient temperatures, without auxiliary heat, is discouraged. Installers, operators and maintainers are likely to encounter this substance.

5.11.1 Hazardous Reactions

Under normal conditions of use, this product is not considered hazardous according to regulatory guidelines, although excessive exposure may result in eye, skin or respiratory irritation.

5.11.2 Protective Measures

Ensure good ventilation and avoid heat sources. Prevent small spills and leakages to avoid the hazard of slipping.

Adopt a high standard of personal hygiene. In the case of skin contact, wash with soap and water.

No special respiratory precautions are necessary in normal use and with adequate ventilation. If prolonged or repeated skin contact is likely, oil impervious gloves MUST be worn, and eye protection should be used.

High pressure injection under the skin may occur due to the rupture of pressurised lines.

5.11.3 Storage/Transport

Store and transport only in correctly marked containers. Keep containers closed when not in use. Store away from heat, sparks, flame or strong oxidants and combustible materials.

Contain leak/spill and prevent entry of substance into drainage/sewerage system, water-courses and land. Dispose of unwanted or absorbed substance through an authorised contractor to a licensed site.

5.11.4 Emergency Action

- Fire

  Extinguishing media: CO_2, foam, dry powder, and water fog.

  In enclosed areas fire-fighters MUST use self-contained breathing apparatus. Keep fire exposed containers cool. Prevent run-off from entering waterway, drains and drinking water supplies.

- Ingestion

  Do not induce vomiting. Seek medical advice if discomfort occurs.

- Inhalation (of vapour)

  Remove from further exposure. If respiratory irritation, dizziness, nausea, or unconsciousness occurs, seek medical advice.

- Aspiration (inhalation of liquid)

  Obtain immediate medical assistance.

- Eyes

  Irrigate copiously with water or preferably eye-wash solution for at least five minutes. If irritation persists seek medical advice.

- Skin

  Wash thoroughly with soap and water. Remove and clean oil soaked clothing daily and wash affected area.

- Spillage

  Contain spilled liquid with sand or other suitable absorbent. Dispose of used material as directed under Storage/Transport (Section 5.11.3).

5.12 Grease –Val-Lith EP 2

This is a lithium based grease having a liquid (paste) consistency, is light brown in colour, and has a slight characteristic sulphurous odour. The preparation is not classified as dangerous according to Directive 1999/45/EC and its amendments. This product is not classified according to the EU regulations.

The substance has a boiling point of 371°C and is insoluble in water. The substance has a flash point - closed cup greater than 221°C.

It is used in automotive and industrial equipment for the lubrication of bearings and shaft joints to reduce ingress of moisture over a wide temperature range. Installers, operators and maintainers are likely to encounter this product.

5.12.1 Hazardous Reactions

The product is considered to be stable. However do not expose containers to heat or sources of ignition. It is reactive with oxidising agents. Results of decomposition are carbon oxides (CO, CO_2), water, and some metallic oxides.

Repeated or prolonged exposure is not known to aggravate medical conditions.

5.12.2 Protective Measures

Ensure good ventilation and avoid heat sources. Prevent small spills and leakages to avoid the hazard of slipping.

Adopt a high standard of personal hygiene. In the case of skin contact, wash with soap and water.

No special respiratory precautions are necessary in normal use and with adequate ventilation. Wear a lab coat and wash hands after handling.

5.12.3 Storage/Transport

Store and transport only in correctly marked containers. Keep containers tightly sealed when not in use. Store in a well ventilated area, away from heat, and combustible materials.

Wear boots and gloves and use a tool to scoop up solid or absorbed material. Dispose of unwanted or absorbed substance through an authorised contractor to a licensed site.

5.12.4 Emergency Action

- Fire

  Extinguishing media:
  Small fires - CO_2, dry chemical powder.
  Larger fires - water spray, fog or foam. For safety reasons do not use a full water jet.

  Fire-fighters should wear self-contained breathing apparatus, and full turnout gear. Keep fire exposed containers cool.

- Ingestion

  Do not induce vomiting. Seek medical advice if discomfort occurs.

- Inhalation (of vapour)

  Remove from further exposure. Seek medical advice.

- Aspiration (inhalation of liquid)

  Obtain immediate medical assistance.

- Eyes

  Irrigate copiously with water or preferably eye-wash solution for at least fifteen minutes. If irritation persists seek medical advice.

- Skin

  Wash thoroughly with soap and water. Remove oil soaked clothing daily and wash before reuse. Clean shoes thoroughly before reuse. Obtain medical attention.

- Spillage

  Use a tool to scoop up solid or absorbed material and dispose of used material as directed under Storage/Transport (Section 5.12.3).

5.13 Lubrication Oil – Premium Blue E 15W40

Also known as oil, lube oil, sump oil, new oil is a dark, viscous liquid with a slight, characteristic odour. The base oil contains; distillates (petroleum), solvent-dewaxed heavy paraffinic. It is not classified as dangerous according to Directive 1999/45/EC and its amendments, and is not classified according to the EU regulations.

It has a boiling point greater than 150°C, a flash point Open Cup of 220°C (Cleveland), and is insoluble in cold water.

It is used in engine lubrication oil systems, sump pan and filters, make-up tanks and piping systems as a lubrication oil for use in wide range of diesel engines operating under severe conditions. Installers, operators and maintainers are likely to encounter this product.

5.13.1 Hazardous Reactions

This product is stable although slightly re-active with oxidising agents. Results of decomposition are carbon oxides (CO, CO_2) and water.

Although harmful if swallowed or aspirated (breathed in), repeated or prolonged exposure is not known to aggravate medical conditions.

Used oil may contain harmful combustion by-products and unburnt fuel that will cause skin reactions as detailed for fuel. Particular care must be taken if oil from a severely overheated engine is handled - use impervious gloves, lab coat and safety glasses.

Do not breathe vapour/spray.

5.13.2 Protective Measures

Ensure good ventilation and avoid heat sources.

Adopt a high standard of personal hygiene. In case of skin contact, wash thoroughly with soap and water.

Use safety glasses, impervious gloves and lab coat. Avoid contamination inside the gloves. If overalls become contaminated, discontinue use and clean thoroughly.

No special respiratory precautions are necessary in normal use. Do not breathe vapour/spray when handling hot materials.

5.13.3 Storage / Transport

Store and transport only in correctly marked containers. Keep containers tightly sealed when not in use. Keep in a cool, well ventilated area, out of sunlight and away from naked flames. Store well away from food-stuffs and drinking water.

Wear splash goggles, full suit, boots and gloves. Absorb leak/spill with an inert material and dispose of unwanted or absorbed substance through an authorised contractor to a licensed site. Finish cleaning by spreading water on the contaminated surface and allow to evacuate through the sanitary system.

5.13.4 Emergency Action

- Fire

  Extinguishing media:
  Large fire – Use water spray, fog or foam. Do not use water jet.
  Small fire – Use dry chemical powder or CO_2.

  Fire-fighters to use self contained breathing apparatus and full turnout gear. Keep fire exposed containers cool.

- Ingestion

  Do not induce vomiting. Obtain medical advice immediately.

- Inhalation (of vapour)

  Remove from further exposure. Obtain medical attention.

- Aspiration (inhalation of liquid)

  Obtain immediate medical assistance.

- Eyes

  Flush copiously with water or preferably eye-wash solution for at least fifteen minutes. Obtain medical advice.

- Skin

  Wash thoroughly with soap and water. Obtain medical advice if irritation develops. Change clothing if necessary and wash before re-use.

- Spillage

  Absorb with an inert material and dispose of this as directed under Storage/Transport (Section 5.13.3).

5.14 Sulphuric Acid Battery Quality 1140 – 1400 SG (15-50%)

Also known as battery acid, battery electrolyte, electrolyte, this is a colourless to dark brown liquid, with a characteristic acrid, acidic odour. It is readily soluble in water forming a dilute, corrosive solution. Sulphuric acid battery quality 1140 – 1400sg (15-50%) contains aqueous solutions of sulphuric acid including all grades between 1140(10%) – 1400(50%). Sulphuric acid is a potentially hazardous product.

It has a boiling point between 104°C – 124°C, and a vapour pressure of 6.2mm Hg at 20°C.

In solution it is used as an electrolyte for lead acid batteries. These batteries are used in the starting and control systems on generating sets. Installers, operators and maintainers are likely to encounter this product.

5.14.1 Hazardous Reactions

The product is considered to be stable. However it may give rise to hazardous fumes in a fire. Violent reaction with water generates heat and may cause an explosion. Attacks many metals liberating hydrogen gas. Combustion will generate oxides of sulphur.

Avoid contact with body tissue. Causes destruction of body tissue, severe burns.

Inhalation of the spray mist may produce severe irritation of the respiratory tract. May be fatal if swallowed, causing burns to mouth, throat and stomach. Corrosive to eyes. Repeated or prolonged exposure to spray mist may produce chronic eye irritation, severe skin irritation, and respiratory irritation leading to frequent attacks of bronchial infection.

5.14.2 Protective Measures

Ensure good ventilation and avoid heat sources. Fumes must be positively removed from confined spaces by fume extraction.

Adopt a high standard of personal hygiene. Use total eye protection goggles, acid-resistant gloves (e.g. PVC), overalls, acid resistant apron and rubber boots. Note that handling contaminated clothing may result in acid burns.

No special respiratory precautions are necessary in normal use, however respiratory protection should be used if there is a risk of uncontrolled exposure to vapour. Avoid contact with acid mist if large quantities of batteries are being charged or if working close to charging batteries.

5.14.3 Storage / Transport

Store and transport only in correctly marked containers and keep tightly sealed when not in use. Stock tanks should be bunded separately, away from organic substances such as wood, paper, straw, and other reactive chemicals. Prevent water or steam from entering container at all times. Suitable storage materials are PTFE, and glass. Store in rubber-lined tanks for acid concentrations less than 70%. Do not store in metal drums, nylon, or plasticised PVC.

Keep cool, out of sunlight and away from naked flames. Store well away from food-stuffs and drinking water. Take special care to avoid discharge into drains, sewers and water-courses.

In case of spillage, contain using earth, sand or other inert material and transfer to suitable containers. Arrange disposal in accordance with local regulations. Advise the Emergency Services if the substance has entered a watercourse or sewer, or has contaminated soil or vegetation.

5.14.4 Emergency Action

- Fire

  Keep containers and surroundings cool with water spray. Water must not enter tanks or containers. Select extinguishing media appropriate to other materials involved.

  It may give rise to hazardous fumes in a fire. Violent reaction with water generates heat and may cause an explosion. Prevent run-off from entering waterways, drains and drinking water supplies.

  Fire-fighters to wear full protective clothing and use self contained breathing apparatus.

- Ingestion

  Do not induce vomiting. Wash out mouth with water. Give sips of cold water or milk to soothe the affected parts. Ingested acid must be diluted by approximately x 100, to render harmless to tissues. Obtain medical advice immediately.

- Inhalation (of vapour)

  Remove from further exposure. If breathing stops or shows signs of failing, give artificial respiration. Do not use mouth to mouth ventilation. If there is difficulty in breathing, give oxygen. Keep warm and at rest. Obtain medical attention urgently.

- Aspiration (inhalation of liquid)

  Obtain immediate medical assistance.

- Eyes

  Irrigate copiously with water or preferably eye-wash solution for at least fifteen minutes. Seek medical advice.

- Skin contact

  Flush area with copious quantities of water, preferably under a shower. Remove contaminated clothing, which should be washed or dry-cleaned before re-use.

  Obtain medical attention if blistering or redness persists.

- Spillage

  Wear appropriate protective clothing. Ventilate the area to dispel possible toxic, decomposition fumes. Contain and absorb using earth, sand or other inert material. Transfer to suitable container for disposal in accordance with local regulations as directed under Storage/Transport (Section 5.14.3).

5.14.5 Special Note: Identification of Usage

WARNING: CARE MUST BE TAKEN TO IDENTIFY THAT THE SULPHURIC ACID 'BATTERY ELECTROLYTE' OR 'ELECTROLYTE' IS THE CORRECT SUBSTANCE FOR USE IN A BATTERY. A VIOLENT CHEMICAL REACTION WILL OCCUR IF SULPHURIC ACID IS ACCIDENTALLY MIXED WITH ALKALINE BATTERY ELECTROLYTE.

5.14.6 Special Note: Concentrated Sulphuric Acid

WARNING: DO NOT ADD WATER TO ACID - A VIOLENT REACTION WILL OCCUR.

In some cases, sulphuric acid may be purchased in concentrated form. This is a clear viscous liquid. Do not attempt to add this type of acid to batteries. Dilution should only be attempted by experienced personnel. If spillage of concentrated acid occurs contact emergency services immediately and quote hazard code 1830.

5.14.7 Special Note: Lead Acid Batteries

Lead acid batteries contain significant quantities of metallic lead, which is harmful. Provided that the battery is not dismantled in any way, there is no risk of heavy metal poisoning from batteries. Use gloves when connecting and adopt a high standard of personal hygiene. Batteries can be recycled, and used batteries should be disposed of in accordance with local authority environmental health regulations.

5.15 Potassium Hydroxide – Solid

This is also known as caustic potash – solid. It is white, odourless, and may be granules, flakes, pellets, powder, lumps, solid blocks or sticks. Potassium hydroxide is potentially a hazardous product.

When added to distilled water it is used as battery electrolyte (NiCad batteries only). These batteries are used in the starting and control systems of generating sets. Installers, operators and maintainers are likely to encounter this product.

5.15.1 Hazardous Reactions

Highly corrosive, this product reacts with water to produce a caustic solution and heat. (N.B. sufficient heat can be generated with moisture to ignite combustible materials).

Reacts violently with acids. Attacks aluminium, lead, tin, zinc and their alloys, releasing flammable hydrogen gas. Reacts with ammonium salts giving ammonia.

Non flammable and non combustible in bulk form but when in battery may be associated with explosive gases.

Note: Heating will cause pressure rise with risk of bursting - keep drums cool.

Avoid contact with body tissue. The highly corrosive nature of this product causes severe burns to eyes and skin.

5.15.2 Protective Measures

Ensure good ventilation and avoid heat sources.

Adopt a high standard of personal hygiene.

Use total eye protection goggles, plastic or rubber gloves (e.g. PVC), overalls, apron and rubber boots. Note that handling contaminated clothing may result in damage to the skin. It is advised to have an eyewash bottle with clean water in the vicinity.

No special respiratory precautions are necessary in normal use.

5.15.3 Storage / Transport

Store and transport only in correctly marked containers and keep tightly sealed when not in use. Keep cool, out of sunlight and away from naked flames. Store well away from food-stuffs and drinking water. Take special care to avoid discharge into drains, sewers and water-courses.

Wearing total personal protection, cover a spillage with earth or sand and transfer to another container. Arrange disposal in accordance with local regulations. If the substance has entered a water course or sewer, or has contaminated soil or vegetation, please advise the Emergency Services.

5.15.4 Emergency Action

- Fire

  Non-combustible. Keep drums cool to reduce risk of bursting.

- Ingestion

  Do not induce vomiting. Drink copious quantities of milk. In all cases obtain immediate medical attention.

- Inhalation (of vapour)

  Remove from further exposure. In cases of irritation to lungs or throat seek medical advice.

- Aspiration (inhalation of liquid)

  Obtain immediate medical attention.

- Eyes

  Irrigate copiously with water. In all cases obtain immediate medical attention.

- Skin

  Remove contaminated clothing and flush affected skin with copious quantities of water. Cover with dry gauze. Change clothing if necessary and wash before re-use.

- Spillage

  Wearing protective clothing, cover spillage with earth or sand. Transfer to another container in accordance with local regulations as directed under Storage/Transport (Section 5.15.3).

5.16 Potassium Hydroxide – Solution

Also known as NiCad battery electrolyte, or electrolyte, this is a clear colourless liquid, readily soluble in water forming a diluted corrosive solution and considered to be a potentially hazardous product. Non flammable and non combustible in bulk form but when in battery may be associated with explosive gases. These NiCad batteries are used in the starting and control systems of generating sets. Installers, operators and maintainers are likely to encounter this product.

5.16.1 Hazardous Reactions

Highly corrosive this product reacts violently with acids. Attacks aluminium, lead, tin, zinc and their alloys, releasing flammable hydrogen gas. Reacts with ammonium salts to produce ammonia. When in battery it may be associated with explosive gases.

Avoid contact with body tissue. The highly corrosive nature of this product causes severe burns to eyes and skin.

5.16.2 Protective Measures

Ensure good ventilation and avoid heat sources. The fumes given off when batteries are charging is an explosive mixture of hydrogen and oxygen. Fumes must be positively removed from confined spaces by fume extraction. Use insulated tools when fitting batteries or making connections. Avoid sparks or naked flames in vicinity of battery, especially when charging.

Adopt a high standard of personal hygiene.

Use total eye protection goggles, plastic or rubber gloves (e.g. PVC), overalls, apron and rubber boots. Note that handling contaminated clothing may result in damage to the skin.

No special respiratory precautions are necessary in normal use. Avoid contact with electrolyte mist if large quantities of batteries are being charged or if working close to charging batteries.

5.16.3 Storage / Transport

Store and transport only in correctly marked containers, and keep tightly sealed when not in use. Keep cool, out of sunlight and away from naked flames. Store well away from food-stuffs and drinking water. Take special care to avoid discharge into drains, sewers and water-courses.

Cover a spillage with earth or sand and transfer to another container. Arrange disposal in accordance with local regulations. If the substance has entered a water course or sewer, or has contaminated soil or vegetation, please advise the Emergency Services.

5.16.4 Emergency Action

- Fire

  Extinguishing media: CO_2, dry powder, or Halon. DO NOT use water or water based foam.

  Fire fighters to use self contained breathing apparatus. Keep fire exposed containers cool. Prevent run-off from entering waterways drains and drinking water supplies.

- Ingestion

  Do not induce vomiting. Drink copious quantities of milk. In all cases obtain immediate medical attention.

- Inhalation (of vapour)

  Remove from further exposure. In cases of irritation to lungs or throat seek medical advice.

- Aspiration (inhalation of liquid)

  Obtain immediate medical attention.

- Eyes

  Irrigate copiously with water. In all cases obtain immediate medical attention.

- Skin

  Remove contaminated clothing and flush affected skin with copious quantities of water. Cover with dry gauze. Change clothing if necessary and wash before re-use.

- Spillage

  Wearing protective clothing, cover spillage with earth or sand. Transfer to another container in accordance with local regulations as directed under Storage/Transport (Section 5.16.3).

5.16.5 Special Note: Identification of Usage

WARNING: CARE MUST BE TAKEN TO IDENTIFY THAT THE ALKALINE BATTERY ELECTROLYTE IS THE CORRECT SUBSTANCE FOR USE IN A BATTERY. A VIOLENT CHEMICAL REACTION WILL OCCUR IF ALKALINE BATTERY ELECTROLYTE IS ACCIDENTALLY MIXED WITH SULPHURIC ACID 'BATTERY ELECTROLYTE' OR 'ELECTROLYTE' IN A LEAD-ACID BATTERY.

5.16.6 Special Note: Disposal

The simple electrochemistry of a NiCad battery brings alkaline electrolyte into contact with nickel-cadmium plates. No structural degradation can occur.

Provided that the battery is not dismantled in any way, there is minimal risk to personnel provided the above precautions are met. Do not dispose of the battery in land fill, and do not incinerate. Batteries can be recycled and should be returned to the manufacturer for recycling at the end of there life.

5.17 Natural Gas

Also known as Methane, this gas is not visible. A strong smell may be detectable if the gas has been treated with a smell additive for leakage detection. Natural Gas is piped to the generator set and would be found in the gas pipeline, gas train or generator set carburetor system. It is soluble in water, alcohol, ether and most organic Solvents. Installers, operators and maintainers are likely to encounter this product.

5.17.1 Hazardous Reactions

Extremely flammable/explosive at **low** levels in Air Atmosphere (4% to 15% Gas in Air). Relatively low levels of gas leakage in confined areas can cause explosions and fires if a spark occurs to ignite it. Inhalation of large volumes of natural gas can cause asphyxiation and death.

Effects of over exposure include headaches, dizziness, drowsiness, nausea or vomiting. Gas under pressure can penetrate skin; high concentrations can damage eyesight or cause blindness.

5.17.2 Protective Measures

Ensure good ventilation and avoid heat sources. Ensure all pipelines, gas train and fittings are gas tight and free from leaks. If leakage occurs isolate the gas supply, do not operate any electrical equipment which may cause a spark or become a source of ignition. Fully ventilate the area, and evacuate the building. Contact suitably qualified personnel who are fully trained to handle natural gas emergencies

No special respiratory precautions are necessary in normal use.

In the event of a gas leakage, eye protection goggles, rubber gloves (e.g. PVC) and breathing apparatus may be required.

5.17.3 Storage / Transport

Gas pipeline – not applicable.

5.17.4 Emergency Action

- Fire

  Extinguishing media: CO_2, dry powder, or Halon, Sand, Waterspray Fog, Mist or Water Based Foam. In the event of fire, attempt to shut off the gas supply and immediately inform the local fire authority and gas supplier. Natural gas is extremely flammable and may re-ignite after fire is extinguished. Carbon Dioxide (CO_2) and Carbon Monoxide (CO) gas is released when burning.

- Ingestion

  Not expected to be a Health Risk via this route.

- Inhalation (of vapour)

  Remove from further exposure. Inhalation can cause headaches, dizziness, nausea or vomiting. High vapour concentrations can lead to general narcotic effect or unconciousness. High volumes of gas or vapour displaces oxygen content available for breathing and can cause asphyxiation and death.

- Aspiration (inhalation of liquid)

  Not applicable.

- Eyes

  Gas under pressure can penetrate skin; high concentrations can damage eyesight or cause blindness.

- Skin

  In the event of a gas leakage, eye protection goggles, rubber gloves (e.g. PVC) and breathing apparatus may be required.

- Spillage

  In the event of Gas leakage, isolate the gas supply, ventilate the area and inform the local supplier. Do **not** operate electrical switches, mobile phones, torches etc, or any other equipment that may cause a spark to ignite gas – these should be removed or rendered inoperable. In circumstances of excessive leakage, evacuate the building and call the emergency services and the local gas supplier.

Cummins Power Generation
1400 73rd Avenue NE
Minneapolis
MN 55432
USA

Tel:+1 (763) 574-5000
Fax:+1 (763) 574-5298

e-mail: pgamail@cummins.com

Web: www.cumminspower.com

Cummins Power Generation
Columbus Avenue
Manston Park
Manston
Ramsgate
Kent CT12 5BF
United Kingdom

Tel:+44 (0) 1843 255000
Fax:+44 (0) 1843 255902

e-mail: cpgk.uk@cummins.com

Web: www.cumminspower.com

Cummins Power Generation
10 Toh Guan Road #07-01
TT International Tradepark
Singapore 608838

Tel: (65) 6417 2388
Fax:(65) 6417 2399

e-mail: cpg.apmktg@cummins.com

Web: www.cumminspower.com

Cummins Power Generation
35A/1/2, Erandawana
Pune 411 038
India

Tel.: (91 020) 3024 8600
Fax: (91 020) 6602 8090

e-mail:
cpgiservicesupport@cummins.com

Web: www.cumminspower.com

Cummins Power Generation
Rua Jati, 310 - Cumbica
Guarulhos –SP
Brazil
CEP: 07180-900

Tel.: (55 11) 2186 4195
Fax: (55 11) 2186 4729

e-mail:
falecom@cumminspower.com.br

Web: www.cumminspower.com

Cummins®, the "C" logo, and "Our energy working for you."

are trademarks of Cummins Inc.

©2009 Cummins Power Generation, Inc. All rights reserved

PREMIUM BLUE SAE 15W-40
DIESEL ENGINE OIL
VV70505

1. IDENTIFICATION OF THE SUBSTANCE/PREPARATION AND OF THE COMPANY/UNDERTAKING

Ashland	Regulatory Information Number	1-800-325-3751
P.O. Box 2219	Telephone	614-790-3333
Columbus, OH 43216	Emergency telephone	1-800-ASHLAND (1-800-274-5263)

Product name	PREMIUM BLUE SAE 15W-40 DIESEL ENGINE OIL
Product code	VV70505
Product Use Description	No data

2. HAZARDS IDENTIFICATION

Emergency Overview

Appearance: liquid, amber

CAUTION! PROLONGED OR REPEATED CONTACT MAY DRY THE SKIN AND CAUSE IRRITATION AND BURNS.

Potential Health Effects

Routes of exposure

Inhalation, Skin contact, Eye Contact, Ingestion

Eye contact

Unlikely to cause eye irritation or injury.

Skin contact

May cause mild skin irritation. Prolonged or repeated contact may dry the skin. Symptoms may include redness, burning, drying and cracking of skin, and skin burns.

Ingestion

Swallowing small amounts of this material during normal handling is not likely to cause harmful effects. Swallowing large amounts may be harmful. This material can get into the lungs during swallowing or vomiting. This results in lung inflammation and other lung injury.

Inhalation

It is possible to breathe this material under certain conditions of handling and use (for example, during heating, spraying, or stirring). Breathing small amounts of this material during normal handling is not likely to cause harmful effects. Breathing large amounts may be harmful. Symptoms are not expected at air concentrations below the recommended exposure limits, if applicable (see Section 8.).

Aggravated Medical Condition

Preexisting disorders of the following organs (or organ systems) may be aggravated by exposure to this material:, skin, lung (for example, asthma-like conditions)

Symptoms

Signs and symptoms of exposure to this material through breathing, swallowing, and/or passage of the material through the skin may include:, stomach or intestinal upset (nausea, vomiting, diarrhea), irritation (nose, throat, airways), Abdominal pain

Target Organs

No data

Carcinogenicity

This material is not listed as a carcinogen by the International Agency for Research on Cancer (IARC), the National Toxicology Program (NTP), or the Occupational Safety and Health Administration (OSHA). Used motor oil has been shown to cause skin cancer in laboratory animals continually exposed by repeated applications. Avoid prolonged or repeated skin contact.

Reproductive hazard

There are no data available for assessing risk to the fetus from maternal exposure to this material.

3. COMPOSITION/INFORMATION ON INGREDIENTS

Components	CAS-No.	Concentration
DISTILLATES (PETROLEUM), HYDROTREATED HEAVY PARAFFINIC	64742-54-7	>=80-<90%

4. FIRST AID MEASURES

Eyes

If symptoms develop, move individual away from exposure and into fresh air. Flush eyes gently with water while holding eyelids apart. If symptoms persist or there is any visual difficulty, seek medical attention.

Skin

Remove contaminated clothing. Wash exposed area with soap and water. If symptoms persist, seek medical attention. Launder clothing before reuse.

Ingestion

Seek medical attention. If individual is drowsy or unconscious, do not give anything by mouth; place individual on the left side with the head down. Contact a physician, medical facility, or poison control center for advice about whether to induce vomiting. If possible, do not leave individual unattended.

Inhalation

If symptoms develop, move individual away from exposure and into fresh air. If symptoms persist, seek medical attention. If breathing is difficult, administer oxygen. Keep person warm and quiet; seek immediate medical attention.

Notes to physician

Hazards: Acute aspiration of large amounts of oil-laden material may produce a serious aspiration pneumonia. Patients who aspirate these oils should be followed for the development of long-term sequelae. Repeated aspiration of small quantities of mineral oil can produce chronic inflammation of the lungs (i.e. lipoid pneumonia) that may progress to pulmonary fibrosis. Symptoms are often subtle and radiological changes appear worse than clinical abnormalities. Occasionally, persistent cough, irritation of the upper respiratory tract, shortness of breath with exertion, fever, and bloody sputum occur. Inhalation exposure to oil mists below current workplace exposure limits is unlikely to cause pulmonary abnormalities.

Treatment: No information available.

5. FIRE-FIGHTING MEASURES

Suitable extinguishing media

Carbon dioxide (CO2), Dry chemical, Foam, Water spray

Hazardous combustion products

carbon dioxide and carbon monoxide, oxides of sulfur, nitrogen and phosphorus, various hydrocarbons

Precautions for fire-fighting

Never use welding or cutting torch on or near drum (even empty) because product (even just residue) can ignite explosively.Wear full firefighting turn-out gear (full Bunker gear), and respiratory protection (SCBA). DO NOT direct a solid stream of water or foam into hot, burning pools of liquid since this may cause frothing and increase fire intensity. Frothing can be violent and possibly endanger any firefighter standing too close to the burning liquid.

Flammability Class for Flammable Liquids

Combustible Liquid Class IIIB

6. ACCIDENTAL RELEASE MEASURES

Personal precautions

For personal protection see section 8. Spills of this material are very slippery.

Environmental precautions

Prevent run-off to sewers, streams or other bodies of water. If run-off occurs, notify proper authorities as required, that a spill has occurred.

Methods for cleaning up

Persons not wearing protective equipment should be excluded from area of spill until clean-up has been completed. Stop spill at source, dike area of spill to prevent spreading, pump liquid to salvage tank. Remaining liquid may be taken up on sand, clay, earth, floor absorbent, or other absorbent material and shoveled into containers.

Other information

Notify the proper authorities as required that a spill has occurred. Comply with all applicable federal, state, and local regulations.

7. HANDLING AND STORAGE

Handling

Containers of this material may be hazardous when emptied. Since emptied containers retain product residues (vapor, liquid, and/or solid), all hazard precautions given in the data sheet must be observed.

Storage

Store in a cool, dry, ventilated area, away from incompatible substances.

8. EXPOSURE CONTROLS / PERSONAL PROTECTION

Exposure Guidelines

General advice

These recommendations provide general guidance for handling this product. Personal protective equipment should be selected for individual applications and should consider factors which affect exposure potential, such as handling practices, chemical concentrations and ventilation. It is ultimately the responsibility of the employer to follow regulatory guidelines established by local authorities.

Exposure controls

General room ventilation should be adequate for normal conditions of use. However, if unusual operating conditions exist, provide sufficient mechanical (general and/or local exhaust) ventilation to maintain exposure below exposure guidelines (if applicable) or below levels that cause known, suspected or apparent adverse effects.

Eye protection

Not required under normal conditions of use. Wear splash-proof safety goggles if material could be misted or splashed into eyes.

Skin and body protection

Wear resistant gloves (consult your safety equipment supplier).
Wear normal work clothing including long pants, long-sleeved shirts and foot covering to prevent direct contact of the product with the skin. Launder clothing before reuse. If skin irritation develops, contact your facility health and safety professional or your local safety equipment supplier to determine the proper personal protective equipment for your use.

Respiratory protection

Respiratory protection is not required under normal conditions of use.

9. PHYSICAL AND CHEMICAL PROPERTIES

Physical state	liquid
Form	No data
Colour	amber
Odour	No data
Boiling point/boilingrange	218.30 °C / 424.9 °F
pH	No data
Flash point	(>)389.8 °F / 198.8 °C
Evaporation rate	No data
Explosion limits	1 %(V) 6 %(V)
Vapour pressure	0.01 hPa @ 70.00 °F / 21.11 °C
Vapour density	No data
Density	0.8744 g/cm3 @ 60.01 °F / 15.56 °C 7.27 lb/gal @ 60.1 °F / 15.6 °C
Solubility	No data
Partition coefficient: n-octanol/water	No data
Autoignition temperature	No data

10. STABILITY AND REACTIVITY

Stability

Stable

Conditions to avoid

excessive heat

Incompatible products

strong oxidizing agents

Hazardous decomposition products

carbon dioxide and carbon monoxide, oxides of sulfur, nitrogen and phosphorus, various hydrocarbons

Hazardous reactions

No data

Thermal decomposition

No data

11. TOXICOLOGICAL INFORMATION

Acute oral toxicity

DISTILLATES (PETROLEUM), HYDROTREATED HEAVY PARAFFINIC	LD 50 Rat: > 15 g/kg

Acute inhalation toxicity

Acute dermal toxicity

DISTILLATES (PETROLEUM), HYDROTREATED HEAVY PARAFFINIC	LD 50 Rabbit: > 5 g/kg

12. ECOLOGICAL INFORMATION

Aquatic toxicity

Acute and Prolonged Toxicity to Fish

No data

Acute Toxicity to Aquatic Invertebrates

No data

Environmental fate and pathways

No data

13. DISPOSAL CONSIDERATIONS

Waste disposal methods

Dispose of in accordance with all applicable local, state and federal regulations. For assistance with your waste management needs - including disposal, recycling and waste stream reduction, contact Ashland Distribution's Environmental Services Group at 800-637-7922.

14. TRANSPORT INFORMATION

Dangerous goods descriptions (if indicated above) may not reflect package size, quantity, end-use or region-specific exceptions that can be applied. Consult shipping documents for descriptions that are specific to the shipment.

15. REGULATORY INFORMATION

California Prop. 65
This product does not contain any chemicals known to State of California to cause cancer, birth, or any other reproductive defects.

SARA Hazard Classification Acute Health Hazard

SARA 313 Component(s)
ZINC COMPOUNDS 1.6072%

	Health	Flammability	Reactivity	Other
HMIS	1	1	0	
NFPA	1	1	0	

16. OTHER INFORMATION

The information accumulated herein is believed to be accurate but is not warranted to be whether originating with the company or not. Recipients are advised to confirm in advance of need that the information is current, applicable, and suitable to their circumstances. This MSDS has been prepared by Ashland's Environmental Health and Safety Department (1-800-325-3751).

Cummins Filtration
1200 Fleetguard Road
Cookeville, Tennessee, U.S.A., 38506
Telephone: (931) 526-9551

MATERIAL SAFETY DATA SHEET

SECTION 1: IDENTIFICATION

Product identifier : **ES COMPLEAT COOLANT EG PREMIX (ETHYLENE GLYCOL BASED COOLANT)**

Product Code(s) : CC2825 (1 Gallon / 3.785 L Bottle of 50/50 Premix); CC2826 (55 gallon / 208 L Drum of 50/50 Premix); CC2827 (Bulk of 50/50 Premix); CC2848 (5 Gallon / 18.9 L Pail of 50/50 Premix); CC2834 (Tote tanks); CC8975 (1 gallon / 3.785 L Bottle of 40/60 Premix); CC8976 (5 Gallon / 18.9 L Pail of 40/60 Premix); CC8977 (55 Gallon / 208 L Drum of 40/60 Premix); CC8978 (250 Gallon / 1000 L of 40/60 Premix); CC2863 (55 Gallon / 208 L Drum of 60/40 Premix).

Product Use : Premixed antifreeze / coolant.

Chemical Family : Mixture.

Supplier's name and address:

Cummins Filtration
1200 Fleetguard Road
Cookeville, TN, U.S.A.
38506

Manufacturer's name and address:

Refer to Supplier

Information Telephone # : (931) 526-9551 (Hours of operation: 24 Hours per day, 7 days per week)

24 Hr. Emergency Tel # : Chemtrec 1-800-424-9300 (Within Continental U.S.); Chemtrec 703-527-3887 (Outside U.S.).

SECTION 2 - HAZARDS IDENTIFICATION

Classification : WHMIS classification:
Class D1B (Materials Causing Immediate and Serious Toxic Effects, Toxic Material);
Class D2A (Materials Causing Other Toxic Effects, Very Toxic Material).

OSHA: This material is classified as hazardous under OSHA regulations (29CFR 1910.1200). Hazardous classification:
Acute Health Hazard;
Chronic Health Hazard.

Emergency Overview : Blue liquid. No odour.
Warning! POISON! Harmful or fatal if swallowed. Harmful if absorbed through the skin. May cause nausea, vomiting, headache and other central nervous system effects. Could also cause convulsions, coma, respiratory arrest and death. Can cause kidney damage. May cause liver effects. Possible birth defect hazard - contains material that may cause birth defects, based on animal data.

POTENTIAL HEALTH EFFECTS:

Signs and symptoms of short-term (acute) exposure

Inhalation : Toxic in particulate form by inhalation. May cause irritation to the nose, throat and upper respiratory tract. If mists are inhaled, may cause tearing, general anesthesia, headache, coughing, respiratory stimulation, nausea, vomiting, pulmonary, kidney and liver damage.

Skin : May cause mild skin irritation. Product may be absorbed and cause symptoms similar to those listed for ingestion.

Eyes : May cause mild eye irritation. Symptoms may include inflammation and tearing.

Ingestion : Harmful or fatal if swallowed. Human poison by ingestion (lethal dose of Ethylene glycol for humans reported to be 100 mL). Symptoms may include pain, headache, nausea, vomiting, dizziness, drowsiness and other central nervous system effects. Initially, the central nervous system is stimulated, followed by depression. Could cause cyanosis (bluish discoloration of the skin due to deficient oxygenation of the blood). May potentially result in lethal kidney damage. Could also cause convulsions, coma, respiratory arrest and death.

Effects of long-term (chronic) exposure

: Prolonged or repeated ingestion may cause bladder or kidney stones.

Carcinogenic status : See TOXICOLOGICAL INFORMATION, Section 11.

Additional health hazards : Potential teratogen. See TOXICOLOGICAL INFORMATION, Section 11.

Potential environmental effects

: See ECOLOGICAL INFORMATION, Section 12.

SECTION 3 - COMPOSITION/INFORMATION ON INGREDIENTS

Ingredients	CAS #	Wt.%
Ethylene glycol	107-21-1	40.00 - 70.00
Diethylene glycol	111-46-6	0.10 - 1.00

SECTION 4 - FIRST AID MEASURES

Inhalation : Immediately remove person to fresh air. If breathing has stopped, give artificial respiration. Obtain medical attention if symptoms develop and persist.

Skin contact : Immediately flush with plenty of water, while removing contaminated clothing. If irritation persists, seek prompt medical attention. Launder clothing before reuse.

Eye contact : Immediately flush eye(s) with plenty of water. After initial flushing, remove any contact lenses if worn, and continue flushing for at least 5 to 10 minutes. If irritation persists, seek prompt medical attention.

Ingestion : Toxic if swallowed. Call a physician or Poison Control Centre immediately. Induce vomiting ONLY under the direct supervision of qualified medical personnel or a poison control centre. Never give anything by mouth to an unconscious person.

Notes For Physician : Prompt medical attention is important. Delayed treatment may result in fatality. This product is a CNS depressant. Use of ethanol may be helpful to counter the toxic effects of ethylene glycol by interfering with the absorption rate in the stomach and intestine.

SECTION 5 - FIRE FIGHTING MEASURES

Fire hazards/conditions of flammability

: Not flammable under normal conditions of handling. However, may ignite if exposed to extreme heat and flame. Closed containers may rupture if exposed to excess heat or flame due to a build-up of internal pressure.

Flammability classification (OSHA 29 CFR 1910.1200)

: Combustible Liquid Class III B.

Oxidizing properties : None known.

Explosion data: Sensitivity to mechanical impact / static discharge

: Not expected to be sensitive to mechanical impact or static discharge.

Suitable extinguishing media : Use media suitable to the surrounding fire such as water fog or fine spray, alcohol foams, carbon dioxide and dry chemical.

Special fire-fighting procedures/equipment

: Firefighters should wear proper protective equipment and self-contained breathing apparatus with full face piece operated in positive pressure mode. Move containers from fire area if safe to do so. Water spray may be useful in cooling equipment exposed to heat and flame.

Hazardous combustion products

: Carbon oxides, formaldehyde and other irritating fumes and smoke.

NFPA Rating

0 - Minimal	1 - Slight	2 - Moderate	3 - Serious	4 - Severe

: *Health:* 2 *Flammability:* 1 *Instability:* 0 *Special Hazards:* None

SECTION 6 - ACCIDENTAL RELEASE MEASURES

Personal precautions : Restrict access to area until completion of clean-up. Ensure clean-up is conducted by trained personnel only. All persons dealing with clean-up should wear the appropriate protective equipment including self-contained breathing apparatus. Refer to Section 8, EXPOSURE CONTROLS AND PERSONAL PROTECTION, for additional information on acceptable personal protective equipment.

Environmental precautions : Ensure spilled product does not enter drains, sewers, waterways, or confined spaces. If necessary, dike well ahead of the spill to prevent runoff into drains, sewers, or any natural waterway or drinking supply.

Spill response/cleanup : Remove all sources of ignition. Ventilate area of release. Stop spill or leak at source if safely possible. Contain and absorb spilled liquid with non-combustible, inert absorbent material (e.g. sand), then place absorbent material into a container for later disposal (see Section 13). Use plastic or aluminum shovels to transfer absorbed waste material into drums. Contaminated absorbent material may pose the same hazards as the spilled product. Notify the appropriate authorities as required.

Prohibited materials : Use non-flammable absorbent only.

Special spill response procedures

: In case of a transportation accident, contact CHEMTREC at 1-800-424-9300 or International at 1-703-527-3887. If a spill/release in excess of the EPA reportable quantity is made into the environment, immediately notify the national response center in the United States (phone: 1-800-424-8002).
US CERCLA Reportable quantity (RQ): Ethylene glycol (5000 lbs. / 2270 kg).

SECTION 7 - HANDLING AND STORAGE

Safe Handling procedures : This material is a harmful liquid. Wear suitable protective equipment during handling. Refer to Section 8, EXPOSURE CONTROLS AND PERSONAL PROTECTION, for additional information on acceptable personal protective equipment. Use with adequate ventilation. Do not ingest. Avoid breathing vapour or mist. Avoid contact with eyes, skin and clothing. Wash with soap and water after handling. Keep away from extreme heat and flame. Keep away from acids and other incompatibles. Use caution when opening cap. Keep containers tightly closed when not in use. Empty containers retain residue (liquid and/or vapour) and can be dangerous. Keep out of the reach of children.

Storage requirements : Store in a cool, dry, well-ventilated area. Store away from areas of excessive heat, open flames, sparks, and other possible sources of ignition. Keep away from incompatibles. Storage area should be clearly identified, clear of obstruction and accessible only to trained and authorized personnel. Inspect periodically for damage or leaks. No smoking in the area.

Incompatible materials : Strong oxidizing agents; Strong acids; Strong alkalis; Halogenated compounds; Alkali metals; Ketones.

Special packaging materials : Always keep in containers made of the same materials as the supply container.

SECTION 8 - EXPOSURE CONTROLS AND PERSONAL PROTECTION

Exposure Limits

Ingredients	ACGIH TLV		OSHA PEL	
	TWA	STEL	PEL	STEL
Ethylene glycol	100 mg/m3 (ceiling)	N/Av	*50 ppm (125 mg/m3) (ceiling)	N/Av
Diethylene glycol	*10 mg/m3	N/Av	N/Av	N/Av

*Note: The OSHA PEL listed above for Ethylene glycol is a final rule / vacated value. The ACGIH TLV listed above for Diethylene glycol is an AIHA WEEL.

Ventilation and engineering measures

: Use sufficient mechanical ventilation to maintain exposures below the TLV.

Respiratory protection : No special precautions required. Respiratory protection is required if the concentrations exceed the TLV. NIOSH-approved respirators are recommended. Seek advice from respiratory protection specialists. Respirators should be selected based on the form and concentration of contaminants in air, and in accordance with OSHA (29 CFR 1910.134) or CSA Z94.4-02.

Skin protection : Gloves impervious to the material are recommended. Advice should be sought from glove suppliers.

Eye / face protection : Chemical splash goggles are recommended. A full face shield may also be necessary.

Other protective equipment : Emergency showers and eyewash facilities should be nearby. Wear a chemically resistant apron and long sleeves when dispensing, to prevent skin contact.

General hygiene considerations : Avoid breathing vapour or mist. Avoid contact with eyes, skin and clothing. When using do not eat or drink. When using do not smoke. Upon completion of work, wash hands before eating, drinking, smoking or use of toilet facilities. Remove soiled clothing and wash it thoroughly before reuse.

SECTION 9 - PHYSICAL AND CHEMICAL PROPERTIES

Physical state	: Liquid.	**Appearance**	: Blue liquid.
Odour	: No odour.	**Odour threshold**	: 25 ppm (Ethylene glycol)
pH	: 10.2 - 10.8		
Boiling point	: 107°C / 224.6°F	**Specific gravity**	: 1.06 - 1.09
Melting/Freezing point	: N/Av	**Coefficient of water/oil distribution**	: N/Av
Vapour pressure (mmHg @ 20° C / 68° F)	: N/Av	**Solubility in water**	: Complete
Vapour density (Air = 1)	: N/Av	**Evaporation rate (n-Butyl acetate = 1)**	: N/Av
Volatile organic Compounds (VOC's)	: N/Av	**Volatiles (% by weight)**	: N/Av
Flash point	: N/Av		
Flash point Method	: COC	**Auto-ignition temperature**	: N/Av
Lower flammable limit (% by vol.)	: N/Av	**Upper flammable limit (% by vol.)**	: N/Av
Flame Projection Length	: N/Ap	**Flashback observed**	: N/Ap

Section 10: Stability And Reactivity

Stability and reactivity : Stable under the recommended storage and handling conditions prescribed.

Hazardous polymerization : Will not occur.

Conditions to avoid : Avoid excessive heat, sparks and open flame. Do not use in areas without adequate ventilation.

Materials To Avoid And Incompatibility : Incompatible materials (see Section 7).

Hazardous decomposition products : None known, refer to hazardous combustion products in Section 5.

SECTION 11 - TOXICOLOGICAL INFORMATION

Target organs : Eyes, skin, respiratory system, central nervous system, liver and kidneys.

Routes of exposure : *Inhalation:* YES *Skin Absorption:* YES *Skin & Eyes:* YES *Ingestion:* YES

Toxicological data : There is no available data for the product itself, only for the ingredients. See below for individual ingredient acute toxicity data.

Ingredients	LC_{50}(4hr) inh, rat	LD_{50} (Oral, rat)	LD_{50} (Rabbit, dermal)
Ethylene glycol	2725 mg/m³ (aerosol)	4000 mg/kg	9530 uL/kg
Diethylene glycol	> 4600 mg/m³ (aerosol)	12,565 mg/kg (rat); 2688 mg/kg (rabbit)	13,300 mg/kg

Carcinogenic status : No components are listed as carcinogens by ACGIH, IARC, OSHA or NTP.

Reproductive effects : None known.

Teratogenicity : Contains ethylene glycol, which may cause teratogenic effects at doses which are not maternally toxic, based on animal data.

Mutagenicity : None known.

Epidemiology : Not available.

Sensitization to material : None known.
Synergistic materials : Not available.
Irritancy : Mild.
other important hazards : CNS depression may result from extreme exposures.
Conditions aggravated by overexposure : Pre-existing skin or eye disorders, and impaired liver or kidney functions.

SECTION 12 - ECOLOGICAL INFORMATION

Ecotoxicity : No data is available on the product itself. The ecological characteristics of this product have not been fully investigated. The product should not be allowed to enter drains or water courses, or be deposited where it can affect ground or surface waters.
Mobility : No information available.
Persistence : No information available.
Bioaccumulation potential : No information available.
Other Adverse Environmental effects : No information available.

SECTION 13 - DISPOSAL CONSIDERATIONS

Handling for Disposal : Handle waste according to recommendations in Section 7.
Methods of Disposal : Dispose in accordance with all applicable federal, state, provincial and local regulations. Contact your local, state, provincial or federal environmental agency for specific rules.
RCRA : If this product, as supplied, becomes a waste in the United States, it may meet the criteria of a hazardous waste as defined under RCRA, Title 40 CFR 261. It is the responsibility of the waste generator to determine the proper waste identification and disposal method. For disposal of unused or waste material, check with local, state and federal environmental agencies.

SECTION 14: TRANPORT INFORMATION

Regulatory Information	UN Number	Shipping Name	Class	Packing Group	Label
49CFR/DOT	None	Not regulated.	Not regulated	none	
49CFR/DOT Additional information	Not regulated when the quantity of Ethylene glycol is less than 5000 pounds per container. If the quantity of Ethylene glycol is greater than 5000 pounds per container, the following DOT shipping description applies: RQ Environmentally hazardous substances, liquid, n.o.s. (Contains: Ethylene glycol), 9, UN3082, III.				
TDG	None	Not regulated.	Not regulated	-None-	
TDG Additional information	None.				
ICAO/IATA	None	Not regulated.	Not regulated	-None-	
ICAO/IATA Additional information	None.				
IMDG	None	Not regulated.	Not regulated	-None-	
IMDG Additional information	None.				

SECTION 15 - REGULATORY INFORMATION

US Federal Information:

TSCA: All listed ingredients appear on the Toxic Substances Control Act (TSCA) inventory.

CERCLA Reportable Quantity (RQ) (40 CFR 117.302): Ethylene glycol (5000 lbs. / 2270 kg).

SARA TITLE III: Sec. 302, Extremely Hazardous Substances, 40 CFR 355: No Extremely Hazardous Substances are present in this material.

SARA TITLE III: Sec. 311 and 312, MSDS Requirements, 40 CFR 370 Hazard Classes: Immediate (Acute) health hazard; Chronic health hazard. Under SARA Sections 311 and 312, the EPA has established threshold quantities for the reporting of hazardous chemicals. The current thresholds are 500 pounds for the threshold planning quantity (TPQ), whichever is lower, for extremely hazardous substances and 10,000 pounds for all other hazardous chemicals.

SARA TITLE III: Sec. 313, Toxic Chemicals Notification, 40 CFR 372: This product may be subject to SARA notification requirements, since it contains Toxic Chemical constituents above their de minimus concentrations. This product contains: Ethylene glycol.

US State Right to Know Laws:

New Jersey Labeling Requirements: This product contains the following substances required to be disclosed on product labeling: Ethylene glycol (CAS # 107-21-1); Water (CAS # 7732-18-5); Dipotassium phosphate (CAS # 7758-11-4); Diethylene glycol (CAS # 111-46-6); Sodium tetraborate, anhydrous (CAS # 1330-43-4); Sodium molybdate (CAS # 7631-95-0). Ethylene glycol is considered a hazardous substance in the State of New Jersey.

California Proposition 65: This product contains chemicals known to the State of California to cause cancer and/or reproductive harm. This product contains trace amounts of: 1,4-Dioxane; Ethylene oxide; Acetaldehyde.

International Information:

WHMIS information: This product is a WHMIS Controlled Product. It meets one or more of the criteria for a controlled product provided in Part IV of the Canadian Controlled Products Regulations (CPR). Refer to Section 2 for a WHMIS Classification for this product.

Canadian Environmental Protection Act (CEPA) information: All ingredients listed appear on the Domestic Substances List (DSL).

This product has been classified in accordance with the hazard criteria of the Controlled Products Regulations (CPR) and this MSDS contains all the information required by the CPR.

SECTION 16 - OTHER INFORMATION

HMIS Rating : *- Chronic hazard 0 - Minimal 1 - Slight 2 - Moderate 3 - Serious 4 - Severe

Health:	*2	*Flammability:*	1	*Reactivity:*	0

Legend :

ACGIH: American Conference of Governmental Industrial Hygienists
AIHA: American Industrial Hygiene Association
CAS: Chemical Abstract Services
CERCLA: Comprehensive Environmental Response, Compensation, and Liability Act of 1980
CFR: Code of Federal Regulations
CSA: Canadian Standards Association
DOT: Department of Transportation
EPA: Environmental Protection Agency
HMIS: Hazardous Materials Identification System
HSDB: Hazardous Substances Data Bank
IARC: International Agency for Research on Cancer
IATA: International Air Transport Association
ICAO: International Civil Aviation Organisation
IMDG: International Maritime Dangerous Goods
Inh: Inhalation
LC: Lethal Concentration
LD: Lethal Dose

N/Ap: Not Applicable
N/Av: Not Available
NFPA: National Fire Protection Association
NIOSH: National Institute of Occupational Safety and Health
NTP: National Toxicology Program
OSHA: Occupational Safety and Health Administration
PEL: Permissible exposure limit
RCRA: Resource Conservation and Recovery Act
RTECS: Registry of Toxic Effects of Chemical Substances
SARA: Superfund Amendments and Reauthorization Act
STEL: Short Term Exposure Limit
TLV: Threshold Limit Values
TWA: Time Weighted Average
WEEL: Workplace Environmental Exposure Level
WHMIS: Workplace Hazardous Materials Identification System

References : 1. ACGIH, Threshold Limit Values and Biological Exposure Indices for 2009.
2. International Agency for Research on Cancer Monographs, searched 2010.
3. Canadian Centre for Occupational Health and Safety, CCInfoWeb databases, 2010 (Chempendium and RTECs).
4. Material Safety Data Sheet from manufacturer.
5. US EPA Title III List of Lists - October 2006 version.
6. California Proposition 65 List - April 2, 2010 version.

Prepared for: Cummins Filtration Cookeville, Tennessee, U.S.A., 38506 Telephone: (931) 526-9551 http://www.cumminsfiltration.com/html/en/index.html Please direct all enquiries to Cummins Filtration.	
Prepared by: ICC The Compliance Center Inc. http://www.thecompliancecenter.com	

DISCLAIMER OF LIABILITY

The information in this MSDS was obtained from sources, which we believe are reliable. However, since the conditions of handling and use are beyond our control, we assume no liability for damages incurred by use of this material. This MSDS was prepared, and is to be used, for this product only. Although certain hazards are described herein, we cannot guarantee that these are the only hazards that may exist. If the product is used as a component in another product, this information may not be applicable. Users of this product should satisfy themselves that the conditions and methods of use assure the product is used safely. No representations or warranties, either expressed or implied, of any nature are made hereunder with respect to the information contained herein. It is the responsibility of the user to comply with any and all federal, state, or local laws and regulations that may exist. Nothing contained herein is to be construed as a recommendation for use in violation of any applicable laws or regulations.

MSDS Preparation Date (dd/mm/yyyy)
: 21/04/2006

MSDS Reviewed Date (dd/mm/yyyy)
: 13/05/2010

Revision No. : 3

Revision Information : (M)SDS sections updated:
2. HAZARDS IDENTIFICATION.

END OF DOCUMENT

This Page Left Intentionally Blank

MATERIAL SAFETY DATA SHEET
LEAD ACID BATTERY WET, FILLED WITH ACID
(US, CN, EU Version for International Trade)

SECTION 1: PRODUCT AND COMPANY IDENTIFICATION

PRODUCT NAME: **Lead Acid Battery Wet, Filled With Acid**
OTHER PRODUCT NAMES: Electric Storage Battery, SLI or Industrial Battery, UN2794

MANUFACTURER: East Penn Manufacturing Company, Inc.
DIVISION: Deka Road
ADDRESS: Lyon Station, PA 19536 USA

EMERGENCY TELEPHONE NUMBERS:
US: CHEMTREC 1-800-424-9300
CN: CHEMTREC 1-800-424-9300
Outside US: 1-703-527-3887

NON-EMERGENCY HEALTH/SAFETY INFORMATION: 1-610-682-6361

CHEMICAL FAMILY: This product is a wet lead acid storage battery. May also include gel/absorbed electrolyte type lead acid battery types.

PRODUCT USE: Industrial/Commercial electrical storage batteries.

This product is considered a Hazardous Substance, Preparation or Article that is regulated under US-OSHA; CAN-WHMIS; IOSH; ISO; UK-CHIP; or EU Directives (67/548/EEC-Dangerous Substance Labelling, 98/24/EC-Chemical Agents at Work, 99/45/EC-Preparation Labelling, 2001/58/EC-MSDS Content, and 1907/2006/EC-REACH), and an MSDS/SDS is required for this product considering that when used as recommended or intended, or under ordinary conditions, it may present a health and safety exposure or other hazard.

Additional Information
This product may not be compatible with all environments, such as those containing liquid solvents or extreme temperature or pressure. Please request information if considering use under extreme conditions or use beyond current product labelling.

SECTION 2: HAZARDS IDENTIFICATION

GHS Classification:

Health	Environmental	Physical
Acute Toxicity – Not listed (NL) Eye Corrosion – Corrosive* Skin Corrosion – Corrosive* Skin Sensitization – NL Mutagenicity/Carcinogenicity – NL Reproductive/Developmental – NL Target Organ Toxicity (Repeated) – NL	Aquatic Toxicity – NL	NFPA – Flammable gas, hydrogen (during charging) CN - NL EU - NL

*as sulfuric acid

GHS Label: Lead Acid Battery, Wet

Symbols: C (Corrosive)

Hazard Statements	Precautionary Statements
Contact with internal components may cause irritation of severe burns. Irritating to eyes, respiratory system, and skin.	Keep out of reach of children. Keep containers tightly closed. Avoid heat, sparks, and open flame while charging batteries. Avoid contact with internal acid.

EMERGENCY OVERVIEW: May form explosive air/gas mixture during charging. Contact with internal components may cause irritation or severe burns. Irritating to eyes, respiratory system, and skin. Prolonged

inhalation or ingestion may result in serious damage to health. Pregnant women exposed to internal components may experience reproductive/developmental effects.

POTENTIAL HEALTH EFFECTS:

EYES: Direct contact of internal electrolyte liquid with eyes may cause severe burns or blindness.

SKIN: Direct contact of internal electrolyte liquid with the skin may cause skin irritation or damaging burns.

INGESTION: Swallowing this product may cause severe burns to the esophagus and digestive tract and harmful or fatal lead poisoning. Lead ingestion may cause nausea, vomiting, weight loss, abdominal spasms, fatigue, and pain in the arms, legs and joints.

INHALATION: Respiratory tract irritation and possible long-term effects.

ACUTE HEALTH HAZARDS:

Repeated or prolonged contact may cause mild skin irritation.

CHRONIC HEALTH HAZARDS:

Lead poisoning if persons are exposed to internal components of the batteries. Lead absorption may cause nausea, vomiting, weight loss, abdominal spasms, fatigue, and pain in the arms, legs and joints. Other effects may include central nervous system damage, kidney dysfunction, and potential reproductive effects. Chronic inhalation of sulfuric acid mist may increase the risk of lung cancer.

MEDICAL CONDITIONS GENERALLY AGGRAVATED BY EXPOSURE:

Respiratory and skin diseases may predispose the user to acute and chronic effects of sulfuric acid and/or lead. Children and pregnant women must be protected from lead exposure. Persons with kidney disease may be at increased risk of kidney failure.

Additional Information

No health effects are expected related to normal use of this product as sold.

SECTION 3: COMPOSITION/INFORMATION ON INGREDIENTS

INGREDIENTS (Chemical/Common Names):	CAS No.:	% by Wt:	EC No.:
Lead, inorganic	7439-92-1	43–70 (average: 65)	231-100-4
Sulfuric acid	7664-93-9	20–44 (average: 25)	231-639-5
Antimony	7440-36-0	0-–4 (average: 1)	231-146-5
Arsenic	7440-38-2	<0.01	231-148-6
Polypropylene	9003-07-0	5–10 (average: 8)	NA

NA: Not applicable; ND: Not determined

Additional Information

These ingredients reflect components of the finished product related to performance of the product as distributed into commerce.

SECTION 4: FIRST AID MEASURES

EYE CONTACT: Flush eyes with large amounts of water for at least 15 minutes. Seek immediate medical attention if eyes have been exposed directly to acid.

SKIN CONTACT: Flush affected area(s) with large amounts of water using deluge emergency shower, if available, shower for at least 15 minutes. Remove contaminated clothing. If symptoms persist, seek medical attention.

INGESTION: If swallowed, give large amounts of water. Do NOT induce vomiting or aspiration into the lungs may occur and can cause permanent injury or death.

INHALATION: If breathing difficulties develop, remove person to fresh air. If symptoms persist, seek medical attention.

SECTION 5: FIRE-FIGHTING MEASURES

SUITABLE/UNSUITABLE EXTINGUISHING MEDIA:

Dry chemical, carbon dioxide, water, foam. Do not use water on live electrical circuits.

SPECIAL FIREFIGHTING PROCEDURES & PROTECTIVE EQUIPMENT:
Use appropriate media for surrounding fire. Do not use carbon dioxide directly on cells. Avoid breathing vapours. Use full protective equipment (bunker gear) and self-contained breathing apparatus.
UNUSUAL FIRE AND EXPLOSION HAZARDS:
Batteries evolve flammable hydrogen gas during charging and may increase fire risk in poorly ventilated areas near sparks, excessive heat or open flames.
SPECIFIC HAZARDS IN CASE OF FIRE:
Thermal shock may cause battery case to crack open. Containers may explode when heated.

Additional Information
Firefighting water runoff and dilution water may be toxic and corrosive and may cause adverse environmental impacts.

SECTION 6: ACCIDENTAL RELEASE MEASURES

PERSONAL PRECAUTIONS:
Avoid Contact with Skin. Neutralize any spilled electrolyte with neutralizing agents, such as soda ash, sodium bicarbonate, or very dilute sodium hydroxide solutions.
ENVIRONMENTAL PRECAUTIONS:
Prevent spilled material from entering sewers and waterways.
SPILL CONTAINMENT & CLEANUP METHODS/MATERIALS:
Add neutralizer/absorbent to spill area. Sweep or shovel spilled material and absorbent and place in approved container. Dispose of any non-recyclable materials in accordance with local, state, provincial or federal regulations.

Additional Information
Lead acid batteries and their plastic cases are recyclable. Contact your East Penn representative for recycling information.

SECTION 7: HANDLING AND STORAGE

PRECAUTIONS FOR SAFE HANDLING AND STORAGE:
- Keep containers tightly closed when not in use.
- If battery case is broken, avoid contact with internal components.
- Do not handle near heat, sparks, or open flames.
- Protect containers from physical damage to avoid leaks and spills.
- Place cardboard between layers of stacked batteries to avoid damage and short circuits.
- Do not allow conductive material to touch the battery terminals. A dangerous short-circuit may occur and cause battery failure and fire.

OTHER PRECAUTIONS (e.g.; Incompatibilities):
Keep away from combustible materials, organic chemicals, reducing substances, metals, strong oxidizers and water.

SECTION 8: EXPOSURE CONTROLS/PERSONAL PROTECTION

ENGINEERING CONTROLS/SYSTEM DESIGN INFORMATION:
Charge in areas with adequate ventilation.
VENTILATION:
General dilution ventilation is acceptable.
RESPIRATORY PROTECTION:
Not required for normal conditions of use. See also special firefighting procedures (Section 5).
EYE PROTECTION:
Wear protective glasses with side shields or goggles.
SKIN PROTECTION:
Wear chemical resistant gloves as a standard procedure to prevent skin contact.
OTHER PROTECTIVE CLOTHING OR EQUIPMENT: Chemically impervious apron and face shield recommended when adding water or electrolyte to batteries.
Wash Hands after handling.
EXPOSURE GUIDELINES & LIMITS:

EXPOSURE GUIDELINES & LIMITS:

OSHA	Permissible Exposure Limit (PEL/TWA)	Lead, inorganic (as Pb)	0.05 mg/m^3	
		Sulfuric acid	1.00 mg/m^3	
		Antimony	0.50 mg/m^3	
		Arsenic	0.01 mg/m^3	
ACGIH	2007 Threshold Limit Value (TLV)	Lead, inorganic (as Pb)	0.05 mg/m^3	
		Sulfuric acid	0.20 mg/m^3	
		Antimony	0.50 mg/m^3	
		Arsenic	0.01 mg/m^3	
Quebec	Permissible Exposure Value (PEV)	Lead, inorganic (as Pb)	0.15 mg/m^3	
		Sulfuric acid	1.00 mg/m^3	TWA
			3.00 mg/m^3	STEV
		Antimony	0.50 mg/m^3	
		Arsenic	0.10 mg/m^3	
Ontario	Occupational Exposure Level (OEL)	Lead (designated substance)	0.10 mg/m^3	
		Sulfuric acid	1.00 mg/m^3	TWAEV
			3.00 mg/m^3	STEV
		Antimony	0.50 mg/m^3	
		Arsenic (designated substance)	0.01 mg/m^3	
Netherlands	Maximaal Aanvaarde Concentratie (MAC)	Lead, inorganic (as Pb)	0.15 mg/m^3	
		Sulfuric acid	1.00 mg/m^3	
Germany	Maximale Arbeitsplatzkonzentrationen (MAK)	Lead, inorganic (as Pb)	0.10 mg/m^3	
		Sulfuric acid	1.00 mg/m^3	TWA
			2.00 mg/m^3	STEL
		Antimony	0.50 mg/m^3	
United Kingdom	Occupational Exposure Standard (OES)	Lead	0.15 mg/m^3	
		Antimony	0.50 mg/m^3	
		Arsenic	0.10 mg/m^3	

TWA: 8-Hour Time-Weighted Average; STE: Short-Term Exposure; mg/m^3: milligrams per cubic meter of air; NE: Not Established; STEV: Short-Term Exposure Value; TWAEV: Time-Weighted Average Exposure Value; STEL: Short-Term Exposure Limit

Additional Information

- Batteries are housed in polypropylene cases which are regulated as total dust or respirable dust only when they are ground up during recycling. The OSHA PEL for dust is 15 mg/m^3 as total dust or 5 mg/m^3 as respirable dust.
- May be required to meet Domestic Requirements for a Specific Destination(s).

SECTION 9: PHYSICAL AND CHEMICAL PROPERTIES

APPEARANCE:	Industrial/commercial lead acid battery
ODOUR:	Odourless
ODOUR THRESHOLD:	NA
PHYSICAL STATE:	Sulfuric Acid: Liquid; Lead: solid
pH:	<1
BOILING POINT:	235-240° F (113-116° C) (as sulfuric acid)
MELTING POINT:	NA
FREEZING POINT:	NA
VAPOUR PRESSURE:	10 mmHg
VAPOUR DENSITY (AIR = 1):	> 1
SPECIFIC GRAVITY (H_2O = 1):	1.27–1.33
EVAPORATION RATE (n-BuAc=1):	< 1
SOLUBILITY IN WATER:	100% (as sulfuric acid)
FLASH POINT:	Below room temperature (as hydrogen gas)
AUTO-IGNITION TEMPERATURE:	NA
LOWER EXPLOSIVE LIMIT (LEL):	4% (as hydrogen gas)
UPPER EXPLOSIVE LIMIT (UEL):	74% (as hydrogen gas)

PARTITION COEFFICIENT: NA
VISCOSITY (poise @ 25° C): Not Available
DECOMPOSITION TEMPERATURE: Not Available

FLAMMABILITY/HMIS HAZARD CLASSIFICATIONS (US/CN/EU): As sulfuric acid
HEALTH: 3 FLAMMABILITY: 0 REACTIVITY: 2

SECTION 10: STABILITY AND REACTIVITY

STABILITY:	This product is stable under normal conditions at ambient temperature.
INCOMPATIBILITY (MATERIAL TO AVOID):	Strong bases, combustible organic materials, reducing agents, finely divided metals, strong oxidizers, and water.
HAZARDOUS DECOMPOSITION BY-PRODUCTS:	Thermal decomposition will produce sulfur dioxide, sulfur trioxide, carbon monoxide, sulfuric acid mist, and hydrogen.
HAZARDOUS POLYMERIZATION:	Will not occur
CONDITIONS TO AVOID:	Overcharging, sources of ignition

SECTION 11: TOXICOLOGICAL INFORMATION

ACUTE TOXICITY (Test Results Basis and Comments):
Sulfuric acid: LD50, Rat: 2140 mg/kg
LC50, Guinea pig: 510 mg/m^3
Lead: No data available for elemental lead

SUBCHRONIC/CHRONIC TOXICITY (Test Results and Comments):
Repeated exposure to lead and lead compounds in the workplace may result in nervous system toxicity. Some toxicologists report abnormal conduction velocities in persons with blood lead levels of 50 µg/100 ml or higher. Heavy lead exposure may result in central nervous system damage, encephalopathy and damage to the blood-forming (hematopoietic) tissues.

Additional Information
- Very little chronic toxicity data available for elemental lead.
- Lead is listed by IARC as a 2B carcinogen: possible carcinogen in humans. Arsenic is listed by IARC, ACGIH, and NTP as a carcinogen, based on studies with high doses over long periods of time. The other ingredients in this product, present at equal to or greater than 0,1% of the product, are not listed by OSHA, NTP, or IARC as suspect carcinogens.
- The 19th Amendment to EC Directive 67/548/EEC classified lead compounds, but not lead in metal form, as possibly toxic to reproduction. Risk phrase 61: May cause harm to the unborn child, applies to lead compounds, especially soluble forms.

SECTION 12: ECOLOGICAL INFORMATION

PERSISTENCE & DEGRADABILITY:
Lead is very persistent in soils and sediments. No data available on biodegradation.

BIOACCUMULATIVE POTENTIAL (Including Mobility):
Mobility of metallic lead between ecological compartments is low. Bioaccumulation of lead occurs in aquatic and terrestrial animals and plants, but very little bioaccumulation occurs through the food chain. Most studies have included lead compounds, not solid inorganic lead.

AQUATIC TOXICITY (Test Results & Comments):
Sulfuric acid: 24-hour LC50, fresh water fish *(Brachydanio rerio)*: 82 mg/l
96-hour LOEC, fresh water fish *(Cyprinus carpio)*: 22 mg/l (lowest observable effect concentration)
Lead (metal): No data available

Additional Information
- No known effects on stratospheric ozone depletion.
- Volatile organic compounds: 0% (by Volume)
- Water Endangering Class (WGK): NA

SECTION 13: DISPOSAL CONSIDERATIONS

WASTE DISPOSAL METHOD:	Following local, State/Provincial, and Federal/National regulations applicable to end-of-life characteristics will be the responsibility of the end-user.
HAZARDOUS WASTE CLASS/CODE:	US - Not applicable to finished product as manufactured for distribution into commerce. CN – Not applicable to finished product as manufactured for distribution into commerce. EWC – Not applicable to finished product as manufactured for distribution into commerce.

Additional Information

Not Included – **Recycle** or dispose as allowed by local jurisdiction for the end-of-life characteristics as-disposed.

SECTION 14: TRANSPORT INFORMATION

GROUND – US-DOT/CAN-TDG/EU-ADR/APEC-ADR:

Proper Shipping Name	Batteries, Wet, Filled with Acid		
Hazard Class	8	ID Number	UN2794
Packing Group	III	Labels	Corrosive

AIRCRAFT – ICAO-IATA:

Proper Shipping Name	Batteries, Wet, Filled with Acid		
Hazard Class	8	ID Number	UN2794
Packing Group	III	Labels	Corrosive

Reference IATA packing instructions 870

VESSEL – IMO-IMDG:

Proper Shipping Name	Batteries, Wet, Filled with Acid		
Hazard Class	8	ID Number	UN2794
Packing Group	III	Labels	Corrosive

Reference IMDG packing instructions P801

Additional Information

Transport requires proper packaging and paperwork, including the Nature and Quantity of goods, per applicable origin/destination/customs points as-shipped.

SECTION 15: REGULATORY INFORMATION

INVENTORY STATUS:

All components are listed on the TSCA; EINECS/ELINCS; and DSL, unless noted otherwise below.

U.S. FEDERAL REGULATIONS:

TSCA Section 8b – Inventory Status: All chemicals comprising this product are either exempt or listed on the TSCA Inventory.

TSCA Section 12b – Export Notification: If the finished product contains chemicals subject to TSCA Section 12b export notification, they are listed below:

Chemical	**CAS #**
None	NA

CERCLA (COMPREHENSIVE RESPONSE COMPENSATION, AND LIABILITY ACT)

Chemicals present in the product which could require reporting under the statute:

Chemical	**CAS #**
Lead	7439-92-1
Sulfuric acid	7664-93-9

SARA TITLE III (SUPERFUND AMENDMENTS AND REAUTHORIZATION ACT)

The finished product contains chemicals subject to the reporting requirements of Section 313 of SARA Title III.

Chemical	**CAS #**	**% wt**
Lead	7439-92-1	65
Sulfuric acid	7664-93-9	25

CERCLA SECTION 311/312 HAZARD CATEGORIES: Note that the finished product is exempt from these regulations, but lead and sulfuric acid above the thresholds are reportable on Tier II reports.

Fire Hazard	No
Pressure Hazard	No

Reactivity Hazard	No
Immediate Hazard	Yes (Sulfuric acid is Corrosive)
Delayed Hazard	No

Note: Sulfuric acid is listed as an Extremely Hazardous Substance.

STATE REGULATIONS (US):

California Proposition 65

The following chemicals identified to exist in the finished product as distributed into commerce are known to the State of California to cause cancer, birth defects, or other reproductive harm:

Chemical	CAS #	% Wt
Arsenic (as arsenic oxides)	7440-38-2	<0.1
Strong inorganic acid mists including sulfuric acid	NA	25
Lead	7439-92-1	65

California Consumer Product Volatile Organic Compound Emissions

This Product is not regulated as a Consumer Product for purposes of CARB/OTC VOC Regulations, as-sold for the intended purpose and into the industrial/Commercial supply chain.

INTERNATIONAL REGULATIONS (Non-US):

Canadian Domestic Substance List (DSL)

All ingredients remaining in the finished product as distributed into commerce are included on the Domestic Substances List.

WHMIS Classifications

Class E: Corrosive materials present at greater than 1%

This product has been classified in accordance with the hazard criteria of the Controlled Products Regulations (CPR) and the MSDS contains all the information required by the Controlled Products Regulations.

NPRI and Ontario Regulation 127/01

This product contains the following chemicals subject to the reporting requirements of Canada NPRI +/or Ont. Reg. 127/01:

Chemical	CAS #	% Wt
Lead	7439-92-1	65
Sulfuric acid	7664-93-9	25

European Inventory of Existing Commercial Chemical Substances (EINECS)

All ingredients remaining in the finished product as distributed into commerce are exempt from, or included on, the European Inventory of Existing Commercial Chemical Substances.

European Communities (EC) Hazard Classification according to directives 67/548/EEC and 1999/45/EC.

R-Phrases	S-Phrases
35, 36, 38	1/2, 26, 30, 45

Additional Information

This product may be subject to Restriction of Hazardous Substances (RoHS) regulations in Europe and China, or may be regulated under additional regulations and laws not identified above, such as for uses other than described or as-designed/as-intended by the manufacturer, or for distribution into specific domestic destinations.

SECTION 16: OTHER INFORMATION

OTHER INFORMATION:

Distribution into Quebec to follow Canadian Controlled Product Regulations (CPR) 24(1) and 24(2).

Distribution into the EU to follow applicable Directives to the Use, Import/Export of the product as-sold.

Sources of Information:

International Agency for Research on Cancer (1987), *IARC Monographs on the Evaluation of Carcinogenic Risks to Humans: Overall Evaluations of Carcinogenicity: An updating of IARC Monographs Volumes 1-42, Supplement 7, Lyon,* France.

Ontario Ministry of Labour Regulation 654/86. Regulations Respecting Exposure to Chemical or Biological Agents.

RTECS – Registry of Toxic Effects of Chemical Substances, National institute for Occupational Safety and Health.

MSDS/SDS PREPARATION INFORMATION:

DATE OF ISSUE: ***16 December 2011*** SUPERCEDES: ***03 May 2011***

DISCLAIMER:

This Material Safety Data Sheet is based upon information and sources available at the time of preparation or revision date.

MATERIAL SAFETY DATA SHEET
LEAD ACID BATTERY WET, FILLED WITH ACID
(US, CN, EU Version for International Trade)

The information in the MSDS was obtained from sources which we believe are reliable, but are beyond our direct supervision or control. We make no Warranty of Merchantability, Fitness for any particular purpose or any other Warranty, Expressed or Implied, with respect to such information and we assume no liability resulting from its use. For this and other reasons, we do not assume responsibility and expressly disclaim liability for loss, damage or expense arising out of or in any way connected with the handling, storage, use or disposal of the product. It is the obligation of each user of this product to determine the suitability of this product and comply with the requirements of all applicable laws regarding use and disposal of this product. For additional information concerning East Penn Manufacturing Co., Inc. products or questions concerning the content of this MSDS please contact your East Penn representative.

END

Bill of Materials

This Page Left Intentionally Blank

Bill of Materials
Eisenhower - Johnson Memorial Tunnel
350 kW Natural Gas Generator Set
300 Amp Automatic Transfer Switch
Sturgeon Electric
CRM Project # 66545, Revision # 1, Date 03/03/2015

Line	Qty.	Description	Part Number
1		***Generator Set***	
2	1	Genset - Spark Ign, Natural Gas, 60Hz, **350kW**	GFEB
3		KTA19SLB, 530 HP, 8.5:1	ENG
4		N/A	CAT
5		Duty Rating - Standby Power	A331-2
6		Listing - UL 2200	L090-2
7		**Natural Gas**	C002-2
8		Enclosure - Carbon Steel, Onan Green, Base Mtd, Weather Protective	F200-2
9		Generator - HCI434F (ADS #342), 60Hz, Winding 311 - 12 Wire, 0.8pf	B415-2
10		**Voltage - 277/480, 3ph**	R002-2
11		Exciter / Regulator - PMG, 3 Phase Sensor	B184-2
12		120 VAC Resistive Generator Heater	A292-2
13		**Set Control - Power Command 3.3**	H704-2
14		Controls Facing Left	H609-2
15		Radiator Cooled	E082-2
16		Shutdown - Low Coolant Level	H389-2
17		Coolant Heater - Dual 208V / 3750W	H557-2
18		Sightglass on Radiator	E098-2
19		Engine Governor - Electronic, Isochronous Only	A366-2
20		Engine Starter - 24VDC Electric	A334-2
21		Battery Charging Alternator - Normal Output	A333-2
22		Engine Air Cleaner - Normal Duty	D041-2
23		Lube Oil, Engine Filled Prior to Shipment	H706-2
24		Anti-Freeze - 50/50 Mix, System Filled Prior to Shipment	H669-2
25		Oil Heater - 208/240V 1ph	H479-2
26		Extension - Oil Drain	H268-2
27		Extension - Engine Coolant Drain	E089-2
28		Bargraph - AC Analog Meters	H606-2
29		Manuals in English	L050-2
30		Battery Rack	F065-2
31		120/240 VAC Input, 12A / 24V Output	KB59-2
32		Relays - Genset Status (User Configured)	K631-2
33		Circuit Breaker - TM_150A_80%, 600/525V	KS63-2
34		Circuit Breaker - LSi_400A_80%, 600/525V	KM43-3
35		GFCI Outlets on Enclosure	K102-2
36		Genset Warranty - Standby Power 2 years / 400 hours	L029-2

Bill of Materials
Eisenhower - Johnson Memorial Tunnel
350 kW Natural Gas Generator Set
300 Amp Automatic Transfer Switch
Sturgeon Electric
CRM Project # 66545, Revision # 1, Date 03/03/2015

Line	Qty.	Description	Part Number
37		***Cont.***	
38		Shunt Trip - 24VDC, Circuit Breaker	KM72-2
39		Aux Contacts - Form C, SPDT, Circuit Breaker	KM69-2
40			
41		***Heaters***	
42	1	Dual Engine Water Jacket Heaters - Single Phase	H557
43		**208 VAC = 3,750 Watts, 18.03 Amps Total**	
44		***Shore Power VAC Supplied By Others***	
45			
46	1	Engine Oil Pan Heater, Single Phase	H479
47		**208 VAC = 300 Watts / 1.44 Amps**	
48		***Shore Power VAC Supplied By Others***	
49			
50		***Configurable Inputs - Dry Contact Only - PCC 3.3***	
51		***Warning Or Fault Is Shown on The LCD Display***	
52		Cust. Fault #1 - Battery Charger AC Failure	
53		Cust. Fault #2 - Spare	
54		Cust. Input #3 - Spare	
55		Cust. Input #4 - Spare	
56		***Use Stranded Wire Only For Genset Connections***	
57			
58		***Optional Common Alarm Run Relays - PCC 3.3***	
59	1	Common Alarm Relays-Genset Status, User Configured	K631
60		**Relay Ratings: 10 Amps @ 30 VDC**	
61		**(2) Form-A & (2) Form-B Contacts Per Relay**	
62		Cust. Relay #1 - Configurable for any Warning or Shutdown	
63		Cust. Relay #2 - Configurable for any Warning or Shutdown	
64		Cust. Relay #3 - Configurable for any Warning or Shutdown	
65		***Standard Configurable Relay Outputs:***	
66		**N/O Relay Ratings: 2 Amps @ 30 VDC, 3 Amps @ 120 VAC**	
67		Cust. Output #4 - Configurable for any Warning or Shutdown	
68		***Installed In The PCC 3.3 Genset Control Cabinet***	
69		***Use Stranded Wire Only For Genset Connections***	
70			
71			
72			

Bill of Materials
Eisenhower - Johnson Memorial Tunnel
350 kW Natural Gas Generator Set
300 Amp Automatic Transfer Switch
Sturgeon Electric
CRM Project # 66545, Revision # 1, Date 03/03/2015

Line	Qty.	Description	Part Number
73			
74		***Remote Annunciator Panel - Universal***	
75	1	Cummins PCCNet Network Annunciator Panel-	0300-5929-02
76		20 Light, RS485, Flush/Surface NEMA Type 1 Enclosure	
77		Cust. Fault #1 - Spare	
78		Cust. Fault #2 - Spare	
79		Cust. Fault #3 - Spare	
80		**Network Data Cabling Requirements:**	
81		Belden 9729 or Equivalent. Two Pair of Stranded 24 AWG (or Larger)	
82		Twisted Pair Cable With Shield. Shield Must Be Ground At	
83		One End Only. Daisy Chain Network Items.	
84		Do Not Exceed 4000 Feet Cable Length. Run in Dedicated Conduit.	
85		**Annunciator Power Requirements:** Twin Power Conductors.	
86		Stranded, 12 OR 24 VDC Based On Genset Control Voltage.	
87		**Standard Binding:** NFPA 110 Genset Alarms	
88		***Supplied loose For Installation By Others***	
89		***Use Stranded Wire Only For Genset Connections***	
90			
91		***LG 400AF/400AT (Main Line Circuit Breaker)***	
92	1	Square D - 400 Amp L-Frame Circuit Breaker	KM43
93		Ref. Square D Catalog #0611CT1001	
94		L-Frame-400 Amp Current Sensor Set @ **400 Amp Trip**	
95		UL Listed, 3-Pole, **80% Rated**	
96		Interrupting Rating 65 kA @ 240 VAC	
97		Interrupting Rating 35 kA @ 480 VAC	
98		**Micrologic Standard 3.3S LSI Trip Unit**	
99		Adjustable Trip Unit - 125A thru 400A	
100	1	Shunt Trip-Line Circuit Breaker 24VDC	KM72
101	1	Auxiliary Contacts-Line Circuit Breaker	KM69
102		NEMA Type 1 Enclosure	
103		Full Neutral Bus & Ground Bond	
104		**Mechanical Lugs: (1) #2 AWG-600 kcmil Cu Cable Per Phase or**	
105		**Mechanical Lugs: (1) #2 AWG-500 kcmil Al Cable Per Phase**	
106		***Mounted On The Left Side Of The Generator - Bottom Entry***	
107			
108			

Bill of Materials
Eisenhower - Johnson Memorial Tunnel
350 kW Natural Gas Generator Set
300 Amp Automatic Transfer Switch
Sturgeon Electric
CRM Project # 66545, Revision # 1, Date 03/03/2015

Line	Qty.	Description	Part Number
109			
110		***HG 150AF/150AT (Main Line Circuit Breaker)***	
111	1	Square D Local Main Line Circuit Breaker	KS63
112		Ref. Square D Catalog #0611CT0401R7/05	
113		Square D/PowerPact 150 Amp HG-Frame/**150 Amp Trip**	
114		UL Listed, 3-Pole, **80% Rated**	
115		Interrupting Rating 65 kA @ 240 VAC	
116		Interrupting Rating 35 kA @ 480 VAC	
117		**Molded Case, Thermo-Magnetic Trip Unit**	
118	1	1 SPDT Switch- Aux. Contact or Trip Alarm	KM69
119	1	24 VDC Shunt Trip	KM72
120		NEMA Type 1 Enclosure	
121		Full Neutral Bus & Ground Bond	
122		**Mechanical Lugs: (1) #14 AWG-3/0 AWG Al/Cu Cable Per Phase**	
123		***Mounted On The Right Side Of The Generator - Bottom Entry***	
124			
125		***Cummins NPower Engine Coolant & Lube Oil***	
126	1	Initial Fill of Engine Coolant, Ethylene Glycol 50/50-28 Gallon	CC2734
127	1	Initial Fill of Lube Oil, Ultra Low Ash Lubrication Oil-10 Gallon	V705200
128			
129		***Cummins N-Power Warranty***	
130	1	Warranty: 2-Year Base Warranty - Emergency Standby Power	L029
131		From Initial Date Of Start-Up	
132			
133		***Engine Starting System***	
134	2	Diesel Engine Starting Batteries, 8D Lead/Acid Type	908D
135	2	Kim Battery Warming Pads, **120 VAC, 75 Watt Each**	KB7515
136	1	Thermostat, On at 40°F, Off at 60°F	DIT46
137	1	SENS EnerGenius Battery Charger, NFPA-110 Alarms	NRG22-10-RC
138		**10 Amp @ 12/24 VDC Output, 60HZ-120/208-240 VAC Input**	
139		***Shore Power VAC Supplied By Others***	
140			
141			
142			
143			
144			

Bill of Materials
Eisenhower - Johnson Memorial Tunnel
350 kW Natural Gas Generator Set
300 Amp Automatic Transfer Switch
Sturgeon Electric
CRM Project # 66545, Revision # 1, Date 03/03/2015

Line	Qty.	Description	Part Number
145			
146		***Fuel System Accessories***	
147	1	Fuel Strainer - Gaseous, 2in NPT	149-0751
148	1	Flexible Fuel Connection - Gaseous, 2in NPT	MM-2-15
149		***Miscellenous Pipe & Connections Supplied By Others***	
150			
151		***Generator Enclosure***	
152	1	Steel Weather Protective Enclosure	F200
153		NEC Compliant	
154		Drop-Over Style	
155		14 Gauge (Panels) 12 Gauge (Posts) Steel Construction	
156		Five Hinged, Recessed, Key Lockable Doors	
157		Corrosion Resistant Hardware	
158		Cambered Roof	
159	1	Internally Mounted Critical Exhaust Silencer W/ Rain Cap	EXH
160	1	GFCI Outlets on Enclosure	K102
161	1	Extension-Engine Coolant Drain	E089
162	1	Extension-Engine Oil Drain	H268
163		**Double E-Coat Paint - Onan Green**	
164			
165			
166			
167			
168			
169			
170			
171			
172			
173			
174			
175			
176			
177			
178			
179			
180			

Bill of Materials
Eisenhower - Johnson Memorial Tunnel
350 kW Natural Gas Generator Set
300 Amp Automatic Transfer Switch
Sturgeon Electric
CRM Project # 66545, Revision # 1, Date 03/03/2015

Line	Qty.	Description	Part Number
181			
182		***ATS***	
183	1	Transfer Switch-Onan,PwrCmd,**150 Amp**	OTPC150
184		**Poles-3**	A028-7
185		Application-Utility To Genset	A035-7
186		Listing-UL 1008/CSA Certification	A046-7
187		Frequency-60 Hertz	A044-7
188		System-3 Phase,3 Wire Or 4 Wire	A042-7
189		**Voltage-480 Vac**	R026-7
190		**Cabinet-Type 1**	B001-7
191		**Control-Transfer Switch,Level 1**	C023-7
192		**Display-Digital**	M018-7
193		**Module-Relay Signal**	M023-7
194		Auxiliary Relay-Switch In Emergency Position-24VDC	L102-7
195		Auxiliary Relay-Switch In Normal Position-24VDC	L103-7
196		Transfer Switch Warranty - Yr 0-2: Parts, Labor and Travel;	G010-7
197		Yr 3-5: Parts Only; Yr 6-10: Main Contacts Only	
198		Common Parts Listing	CP01-7
199		Product Revision - A	SPEC-A
200			
201		***CRM On-Site Testing***	
202	1	CRM Site Tests:	4-Hour Load Test
203		4-Hour Load Test With CRM Resistive Load Bank	
204			
205		***CRM On-Site Training***	
206	1	Cummins Factory-Authorized Service Representative To	Personnel Training
207		Train Owner's Maintenance Personnel.	
208			
209		***O&M Manuals***	
210	5	Hard Copies of Operation & Maintenance Manuals	O&M
211	1	Electronic Copy of Operation & Maintenance Manuals	O&M On CD
212			
213			
214			
215			
216			

Generator Manuals

Operator Manual

Generator Set

Cummins NPower GF Series

NPower

This manual contains proprietary information to equipment produced by Cummins NPower LLC and Cummins Inc. and is being supplied solely for the purpose of operating, maintaining, and servicing the natural gas generator set purchased from Cummins NPower LLC.

© Copyright 2013, Cummins Inc.

Cummins NPower LLC Generator Sets
Limited Warranty

Commercial Generating Set

This limited warranty applies to all Cummins NPower LLC (hereinafter referred to as “Cummins NPower” branded commercial generating sets and associated accessories (hereinafter referred to as "Product"). This warranty covers any failures of the Product, under normal use and service, which result from a defect in material or factory workmanship.

Warranty Period:

The warranty start date for stationary Product is the date of initial start up, demonstration or 18 months after factory ship date, whichever is sooner. The warranty start date for rental or oil and gas products is the date of receipt of Product by the end customer. See table for details.

Base Warranty Duration
(Whichever occurs first)

Rating	Months	Maximum Hours
Emergency Standby Power (ESP)	12	500
Prime Power (PRP)	12	Unlimited

Emergency Standby Power (ESP) is defined as the maximum power available during a variable electrical power sequence, under the stated operating conditions, for which a generating set is capable of delivering in the event of a reliable utility power outage. The permissible average power output over 24 hours of operation shall not exceed 70% of the ESP. For applications supporting an unreliable utility service, the Prime Power (PRP) rating should be used.
Prime Power (PRP) is defined as being the maximum power which a generating set is capable of delivering continuously while supplying a variable electrical load. The permissible average power output over 24 hours of operation shall not exceed 70% of the PRP.

Cummins NPower Responsibilities:

In the event of a failure of the Product during the warranty period due to defects in material or workmanship, Cummins NPower will only be responsible for the following costs:

- All parts and labor required to repair the Product.
- Reasonable travel expenses to and from the Product site location.
- Maintenance items that are contaminated or damaged by a warrantable failure.

Owner Responsibilities:

The owner will be responsible for the following:

- Notifying Cummins NPower distributor or dealer within 30 days of the discovery of failure.
- Installing, operating, commissioning and maintaining the Product in accordance with Cummins NPower’s published policies and guidelines.
- Providing evidence for date of commissioning.
- Providing sufficient access to and reasonable ability to remove the Product from the installation in the event of a warrantable failure.

In addition, the owner will be responsible for:

- Incremental costs and expenses associated with Product removal and reinstallation resulting from difficult or non-standard installations.
- Costs associated with rental of generating sets used to replace the Product being repaired.
- Costs associated with labor overtime and premium shipping requested by the owner.
- All downtime expenses, fines, all applicable taxes, and other losses resulting from a warrantable failure.

Cummins NPower LLC 1600 Buerkle Road White Bear Lake, MN 55110 Phone 651 636 1000 www.npower.cummins.com

NPower

Limitations:

This limited warranty does not cover Product failures resulting from:

- Inappropriate use relative to designated power rating or application guidelines.
- Normal wear and tear, negligence, accidents or misuse.
- Improper and/or unauthorized installation.
- Lack of maintenance or unauthorized repair.
- Noncompliance with any Cummins NPower published guideline or policy.
- Use of improper or contaminated fuels, coolants or lubricants.
- Improper storage before and after commissioning.
- Owner's delay in making Product available after notification of potential Product problem.
- Replacement parts and accessories not authorized by Cummins NPower.
- Use of Battle Short Mode.
- Owner or operator abuse or neglect such as: operation without adequate coolant or lubricants; over-fueling; over-speeding; lack of maintenance to lubricating, cooling or air intake systems; late servicing and maintenance; improper storage, starting, warm-up, run-in or shutdown practices, or for progressive damage resulting from a defective shutdown or warning device.
- Damage to parts, fixtures, housings, attachments and accessory items that are not part of the generating set.

This limited warranty does not apply to:

- Costs of maintenance, adjustments, installation, commissioning or start-up.
- Starting batteries, heating elements, trailers and enclosures.
- Components added to the Product after shipment from Cummins NPower.

Please contact your local Cummins NPower Distributor for clarification concerning these limitations.

Extended Warranty

Cummins NPower offers the Cummins ENCOMPASS Extended Coverage program for parts and labor as listed in Cummins Bulletin # 3624424 for a period of 5 years or 2000 hours.

Cummins NPower Right to Failed Components:

Failed components claimed under warranty remain the property of Cummins NPower. Cummins NPower has the right to reclaim any failed component that has been replaced under warranty.

THE WARRANTIES SET FORTH HEREIN ARE THE SOLE WARRANTIES MADE BY CUMMINS NPOWER IN REGARD TO THE PRODUCT. CUMMINS NPOWER MAKES NO OTHER WARRANTIES, EXPRESS OR IMPLIED, OR OF MERCHANTABILITY OR FITNESS FOR A PARTICULAR PURPOSE. IN NO EVENT IS CUMMINS NPOWER LIABLE FOR INCIDENTAL OR CONSEQUENTIAL DAMAGES.

This limited warranty shall be enforced to the maximum extent permitted by applicable law. This limited warranty gives the owner specific rights that may vary from state to state or from jurisdiction to jurisdiction.

Table of Contents

Warranty Information

Section 1 - Safety

1.1 Advisory and Cautionary Statements 1-1

Section 2 - Introduction

2.1 How to Obtain Service 2-1
2.1.1 Engine Related Inquiries (Model 150GFPA) 2-1

Section 3 - Operation

3.1 Operator's Pre-Start Checks 3-1
3.1.1 Lubrication 3-1
3.1.2 Coolant 3-1
3.1.3 Fuel 3-1
3.1.4 Ventilation 3-1
3.1.5 Exhaust Outlet 3-1
3.1.6 Batteries 3-2
3.1.7 Emergency Stop Button 3-2
3.2 Control Panel 3-2
3.3 Electronic Control Module (ECM) 3-3
3.4 Sequence of Operation 3-3
3.5 Starting the Generator Set 3-3
3.5.1 Starting at Operator Panel (Manual Run Mode) 3-4
3.5.2 Starting from Remote Location (Auto Mode) 3-5
3.6 Cold Starting with Loads 3-5
3.7 Stopping the Generator Set 3-6
3.7.1 Stopping at Operator Panel (Manual Mode) 3-6
3.7.2 Stopping from Operator Panel (Auto Mode) 3-6
3.7.3 Stopping from Remote Location (Auto Mode) 3-6
3.7.4 Emergency Stop (Code 1433 or 1434) 3-6
3.8 Paralleling Operation 3-7

Section 4 - Troubleshooting

4.1 Safety Considerations 4-1
4.2 Fault Finding 4-2
4.3 Status Indicators 4-2
4.3.1 Not in Auto 4-2
4.3.2 Remote Start 4-2
4.3.3 Warning 4-2
4.3.4 Shutdown Status 4-2
4.3.5 Generating Set Running 4-2
4.4 Fault/Status Codes 4-2
4.4.1 Fault Messages 4-2
4.4.2 Fault Acknowledgement 4-2
4.5 Line Circuit Breaker 4-3
4.6 Control and Diagnostic Via Network or PC (laptop) 4-3

Table of Contents

4.7 Fault Codes 4-3
4.8 Troubleshooting 4-4
4.8.1 Engine will not Start 4-5
4.8.2 Engine will not Pull Load 4-7
4.8.3 Gill AFR Controller Module Flashing 4-8
4.8.4 Gill AFR Center LED Illuminated 4-8
4.8.5 Gill AFR Control Module not Communicating with Laptop 4-8
4.8.6 PCC Controls Fault Codes 4-8

Section 5 - Maintenance

5.1 Owner/Operator Unit Compliance 5-1
5.1.1 Base Drains (Optional) 5-1
Table 5-1 Periodic Maintenance Schedule For Standby Power Gensets 5-2
Table 5-2. Periodic Maintenance Schedule For Prime Power Gensets 5-4
5.2 Generator Set Inspection 5-6
5.2.1 Catalyst-Removable Elements (Only available on some models) 5-6
5.3 Exhaust System 5-6
5.3.1 Fuel Filters (Optional-MOH models only) 5-6
5.3.2 Fuel Heater (Optional-MOH models only) 5-6
5.3.3 Regulator (Optional) 5-6
5.4 Fuel System 5-6
5.5 AC Electric System 5-7
5.5.1 Battery Heater (Optional) 5-7
5.5.2 Control Heater (Optional) 5-6
5.5.3 Breather Heater (Optional) 5-7
5.6 DC Electrical System 5-7
5.7 Engine 5-7
5.8 Generator Set Maintenance (Battery Disconnected) 5-7
5.9 Lubrication System 5-8
5.9.1 Engine Oil Level 5-8
5.9.2 Engine Oil Change 5-8
5.9.3 Oil Filter Change 5-9
5.9.4 Oil Reservoir (Optional) 5-9
5.10 Cooling System 5-9
5.10.1 Coolant Requirements 5-9
5.10.2 Filling the Cooling System 5-10
5.10.3 Coolant Level 5-10
5.10.4 Draining and Flushing 5-10
5.10.5 Radiator 5-11
5.10.6 Coolant Heater 5-11
5.11 Air Filter 5-11
5.12 Belt Replacement 5-11
5.12.1 Belt Removal - Spring Tensioner 5-11
5.12.2 Belt Installation - Spring Tensioner 5-12
5.12.3 Belt Removal - Manual Tensioner 5-12
5.12.4 Belt Installation - Manual Tensioner 5-12
5.13 Ignition System 5-13
5.13.1 Spark Plugs 5-13
5.13.2 High Tension Wires 5-13
5.13.3 Ignition Coil Packs 5-13
5.14 Batteries 5-14
5.14.1 Cleaning Batteries 5-14
5.14.2 Checking Specific Gravity 5-14
5.14.3 Checking Electrolyte Level 5-15

5.14.4 Battery Replacement 5-15
5.14.5 NiCad Batteries 5-15
5.15 Out-of-Service Protection 5-15
5.15.1 Preparing Set for Storage 5-15
5.15.2 Returning Set to Service 5-15

Section 6 - Operating Recommendations

6.1 No-Load Operation 6-1
6.2 Exercise Period 6-1
6.3 Low Operating Temperature 6-1
6.4 High Operating Temperature 6-1

Section 7 - Component Parts and Specifications

7.1 Part Ordering Information 7-1
7.2 Routine Service and Parts 7-1
7.3 Emergency Repairs and Technical Service 7-1
7.4 Recommended Spares Inventory 7-1
7.5 Specifications 7-1
Table 7-1 Drive Belt Tension Table 7-2
Table 7-2 Torque Table 7-3

Section 8 - Wiring Diagrams

8.1 General 8-1
Wiring Diagrams - Electronic Engines 8-1
Wiring Diagrams - Hydro-Mechanical Engines 8-1

Table of Contents

Section 1 - Safety

IMPORTANT SAFETY INSTRUCTIONS - This manual contains important instructions that should be followed during installation and maintenance of the generator and batteries. SAVE THESE INSTRUCTIONS.

Before operating the generator set (genset), read the Operator Manual, become familiar with it and the equipment. Safe and efficient operation can be achieved only if the equipment is properly operated and maintained. Many accidents are caused by failure to follow fundamental rules and precautions.

The following symbols, found throughout this manual, alert you to potentially dangerous conditions to the operator, service personnel, or the equipment.

1.1 Advisory and Cautionary Statements

Advisory and Cautionary Statements are used throughout this manual to call attention to special information, correct operating procedures, and safety precautions.

NOTE: *A general advisory statement relating to equipment operation and maintenance procedures.*

IMPORTANT: *A specific advisory statement intended to prevent damage to the equipment or associated components.*

Cautionary Statements consist of three levels:

DANGER

This symbol warns of immediate hazards which will result in severe personal injury or death.

WARNING

This symbol refers to a hazard or unsafe practice which can result in severe personal injury or death.

CAUTION

This symbol refers to a hazard or unsafe practice which can result in personal injury or product or property damage.

CAUTION

Fuel And Fumes Are Flammable.

Fire, explosion, and personal injury or death can result from improper practices.

- DO NOT fill fuel tanks while the engine is running unless the tanks are outside the engine compartment. Fuel contact with the hot engine or exhaust is a potential fire hazard.
- DO NOT permit any flame, cigarette, pilot light, spark, arcing equipment, or other ignition source near the generator set or fuel tank.
- Fuel lines must be adequately secured and free of leaks. The fuel connection at the engine should be made with an approved flexible line. Do not use copper piping on flexible lines as copper will become brittle if continuously vibrated or repeatedly bent.
- Natural gas is lighter than air, and will tend to gather under hoods. Propane is heavier than air, and will tend to gather in sumps or low areas. NFPA code requires all persons handling propane to be trained and qualified.
- Be sure all fuel supplies have a positive shut-off valve.
- Be sure the battery area has been well-ventilated prior to servicing near it. Lead-acid batteries emit a highly explosive hydrogen gas that can be ignited by arcing, sparking, smoking, etc.

WARNING

Exhaust Gases Are Deadly.

WARNING

The engine exhaust from this product contains chemicals known to the State of California to cause cancer, birth defects, or other reproductive harm.

- Provide an adequate exhaust system to properly expel discharged gases away from enclosed or sheltered areas and areas where individuals are likely to congregate. Visually and audibly inspect the exhaust daily for leaks per the maintenance schedule. Make sure that exhaust manifolds are secured and not warped. Do not use exhaust gases to heat a compartment.

- Be sure the unit is well ventilated.

WARNING

Moving Parts Can Cause Severe Personal Injury or Death.

- Keep your hands, clothing, and jewelry away from moving parts.

- Before starting work on the generator set, disconnect the battery charger from its AC source, depress the E-stop, then disconnect the starting batteries, negative (-) cable first. This will prevent accidental starting.

NOTE: *ECM Engines can sustain damage if not Keyed Off when battery is disconnected. E-stop depress with Key Off control.*

- Make sure that fasteners on the generator set are secure. Tighten supports and clamps. Keep guards in position over fans, drive belts, etc.

- Do not wear loose clothing or jewelry in the vicinity of moving parts, or while working on electrical equipment. Loose clothing and jewelry can become caught in moving parts. Jewelry can short out electrical contacts and cause shock or burning.

- If adjustment must be made while the unit is running, use extreme caution around hot manifolds, moving parts, etc.

WARNING

Electrical Shock Can Cause Severe Personal Injury or Death.

- Disconnect electric power before removing protective shields or touching electrical equipment. Use rubber insulative mats placed on dry wood platforms over floors that are metal or concrete when around electrical equipment. Do not wear damp clothing (particularly wet shoes) or allow skin surface to be damp when handling electrical equipment.

- Use extreme caution when working on electrical components. High voltages can cause injury or death. DO NOT tamper with interlocks.

- Follow all applicable state and local electrical codes. Have all electrical installations performed by a qualified licensed electrician. Tag and lock open switches to avoid accidental closure.

- DO NOT CONNECT GENERATOR SET DIRECTLY TO ANY BUILDING ELECTRICAL SYSTEM. Hazardous voltages can flow from the generator set into the utility line. This creates a potential for electrocution or property damage. Connect only through an approved isolation switch or an approved paralleling device.

General Safety Precautions

- Coolants under pressure have a higher boiling point than water. DO NOT open a radiator or heat exchanger pressure cap while the engine is running. Allow the generator set to cool and bleed the system pressure first.

- Used engine oils have been identified by some state or federal agencies as causing cancer or reproductive toxicity. When checking or changing engine oil, take care not to ingest, breathe the fumes, or contact used oil.

- Keep multi-class ABC fire extinguishers handy. Class A fires involve ordinary combustible materials such as wood and cloth; Class B fires involve combustible and flammable liquid fuels and gaseous fuels; Class C fires involve live electrical equipment. (Ref. NFPA No. 10).

- Make sure that rags are not left on or near the engine.

- Make sure the generator set is mounted in a manner to prevent combustible materials from accumulating under the unit.
- Remove all unnecessary grease and oil from the unit. Accumulated grease and oil can cause overheating and engine damage which present a potential fire hazard.
- Keep the generator set and the surrounding area clean and free from obstructions. Remove any debris from the set and keep the floor clean and dry.
- Do not work on this equipment when mentally or physically fatigued, or after consuming any alcohol or drug that makes the operation of equipment unsafe.
- Substances in exhaust gases have been identified by some state or federal agencies as causing cancer or reproductive toxicity. Take care not to breath or ingest or come into contact with exhaust gases.
- Do not store any flammable liquids, such as fuel, cleaners, oil, etc., near the generator set. A fire or explosion could result.
- Wear hearing protection when going near an operating generator set.
- To prevent serious burns, avoid contact with hot metal parts such as the radiator, turbo charger, and exhaust system.

1.2 Safety/Data Labels

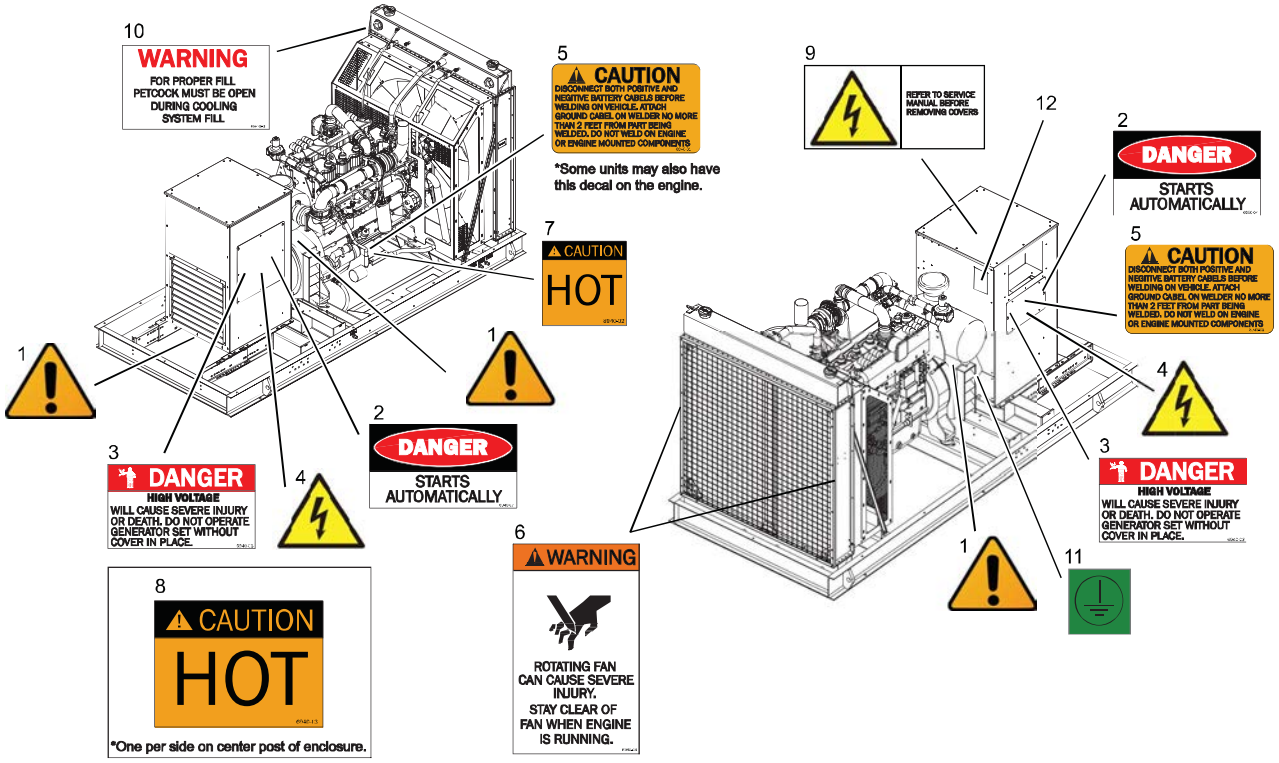

1. Decal, Caution
2. Decal, Danger Auto Start (P/N 6940-07)
3. Decal, Danger High Voltage (P/N 6940-03)
4. Decal, Caution Shock Hazard
5. Decal, Caution Welding (P/N 6940-01)
6. Decal, Warning Rotating Fan (P/N 6940-06)
7. Decal, Caution Hot, Sm (P/N 6940-02)
8. Decal, Caution Hot, Lg (P/N 6940-13) (Enclosed Units Only)
9. Decal, Caution Cover
10. Decal, Warning Petcock (P/N 6940-04) (KTA19 Only)
11. Decal, Ground
12. Data Tag, Genset (P/N 24588)

Figure 1-1 Generator Decal Locations (typical)

Section 3 - Operation

The following describes the function and operation of the PowerCommand® Control (PCC).

The PCC controls the starting and stopping sequence of the engine through the ECM (mounted on the engine). Referenced in separate manuals as indicated in Figure 3-1. The function and operation of the Electronic Control Module (ECM) and how it interfaces with PCC control is also identified in the manuals.

This section covers pre-start checks, starting and stopping and operating the generator set. Each operator should read through this entire section before attempting to start the set. It is essential that the operator be completely familiar with the set and the PCC control. Refer to Section 6 for operating recommendations.

WARNING

Before operating the generator set become familiar with the equipment and how it is operated (including all controls, manually operated valves and alarm devices). Safe and efficient operation can only be achieved if the unit is operated correctly.

Before starting, be sure the following checks have been made and the unit is ready for operation.

WARNING

It is the owner/operator's responsibility to complete site specific emission requirements to ensure compliance with the US EPA SI NSPS.

Emissions on this Generator Set must be dialed-in at the job-site per the following requirements before operation:

GTA855E refer to manual 4325956 and AEB 10.124 and 24.52

KTA19SLB refer to AEB 28.07

3.1 Operator's Pre-Start Checks

3.1.1 Lubrication

Check the engine oil level. Keep the oil level as near as possible to the dipstick high mark without overfilling.

NOTE: *Generator sets may be shipped dry. They must be filled with the correct type and quantity of oil before use. Be sure to check oil level before initial start. Failure to fill to the recommended level can result in equipment damage.*

3.1.2 Coolant

Check the engine coolant level and ensure that the level is always maintained at the coolant expansion tank. Fill the cooling system to the bottom of the fill neck in the radiator fill or expansion tank. Do not check while the engine is hot.

3.1.3 Fuel

Make sure that the fuel tank is filled to the normal level and that the fuel system is primed and all the valves required for operation are open. Make sure that there are no leaks and that all fittings are tight.

3.1.4 Ventilation

Make sure the generator set cooling inlet/outlet and exhaust ventilation openings are unobstructed and operational.

Remove all loose debris from the surrounding area of the generator set. Air flow from the radiator fan can blow loose items around and into ventilation openings.

3.1.5 Exhaust Outlet

Make sure that exhaust components are secured and not warped; that not combustible materials are near the system, and gases are discharged away from building openings. Make sure that there are no leaks and that all fittings are tight.

WARNING

Exhaust gas is deadly! Exhaust gasses contain carbon monoxide, an odorless and colorless gas. Carbon monoxide is poisonous and can cause unconsciousness and death. Symptoms of carbon monoxide poisoning can include:

- Dizziness
- Nausea
- Headache
- Weakness and sleepiness
- Throbbing in temples
- Muscular twitching
- Vomiting
- Inability to think coherently

If you, or anyone else, experience any of these symptoms, get out into the fresh air immediately! If symptoms persist, seek medical attention. Shut down the unit and do not operate until it has been inspected and repaired.

Protection against carbon monoxide inhalation includes proper installation and regular, frequent visual and audible inspection of the complete exhaust system.

3.1.6 Batteries

Make sure that the batteries are charged, that the electrolyte is at the correct level and that all connections are correct.

3.1.7 Emergency Stop Button

Push this button in for emergency shutdown of the generator set. This will stop the generator set immediately and prevent starting of the set from any location (local and remote).

To reset:

1. Pull the button and allow it to pop out.
2. Turn the **Off/Manual/Auto** switch to **O** (Off).
3. Press the front panel Fault Acknowledge/Reset button.
4. Return **Off/Manual/Auto** switch to desired position.

IMPORTANT: *Emergency Stop shutdown can be reset only at the PCC front panel.*

3.2 Control Panel

There are several PowerCommand® Control options available. For more information on a specific option model, refer to the PowerCommand® Control manual shipped with the unit.The following chart lists each option available and shows a figure depicting the option's configuration.

Table 3-1 PowerCommand® Control Options

Description	Part Numbers	Figure Number
PCC 1.1 (1302) Owner Manual	900-0661	Figure 3-1
PCC 2.2 (2300) Operator Manual	900-0665	Figure 3-2
PCC 3.3 (3300) Owner Manual	A029M414	Figure 3-3

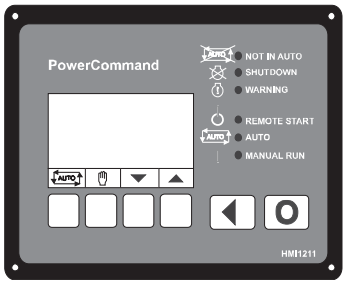

Figure 3-1 PCC 1.1 (1302)

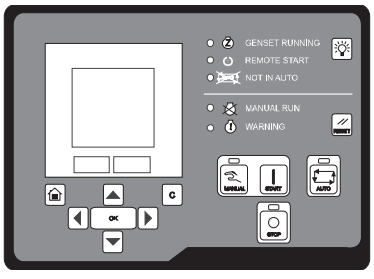

Figure 3-2 PCC 2.2 (2200)

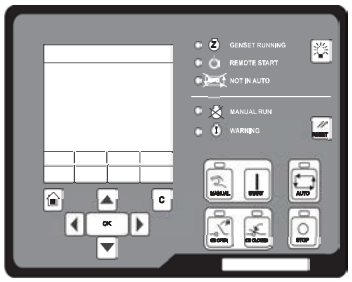

Figure 3-3 PCC3.2 (3200)

NOTE: *1302 Control with HMI211 Figure 3-1 is provided on GTA855 and GTA19 Mechanical Engines as standard. 1302 Control with HMI220 Figure 3-2 is provided on GTA28, 38, 50 Mechanical Engines as standard.*

WARNING

Contacting high voltage components can cause severe personal injury or death by electrocution. Do not open the generator output box while the generator set is running. Read and observe all warning and cautions in your generator set manuals.

CAUTION

Only technically qualified personnel should open the control housing. Voltages are present which can cause electrical shock, resulting in personal injury. Even with the power removed, improper handling of components can cause electrostatic discharge and damage circuit board components.

3.3 Electronic Control Module (ECM)

The PCC controls the starting and stopping sequence of the engine. On electrical engines the ECM drives and monitors engine functions and energizes the starter solenoid through start relay K4 and disconnects the starter. The ECM governs engine speed and performs all engine control, monitoring, and diagnostic functions.

NOTE: *The PCC displays engine oil pressure, coolant temperature, coolant level and speed. The ECM also monitors engine coolant temperature using a different sensor.*

If the ECM shuts down the engine, it will send a signal to the PCC, which will display, ENGINE WARNING (Code 1311). Each digit of the three digit numerical fault code will be displayed as flashes. There will be a brief pause between digits and a longer pause before the repetition.

NOTE: *Code 123 may be indicating higher than expected engine coolant temperature. If overheating is suspected, measure coolant temperature with a gauge while the engine is warming up. If the temperature exceeds 107° C (225° F) service the cooling system as necessary. If temperature is not higher than expected but shutdown recurs, the coolant sensor may be faulty.*

NOTE: *Refer to the troubleshooting instructions for each model specific Genset Controls manual as outlined in Table 3-1.*

See your Authorized Cummins Distributor regarding the wiring harness and software required for performing engine diagnostics using a PC (laptop).

3.4 Sequence of Operation

The generator set is run Automatically using a Remote Start signal or Manually using the generator set control panel buttons. LEDs are provided on the operator panel to indicate the operating Run mode of the generator set. The PowerCommand® controls initiate a starter cranking signal and will perform an automatically sequenced manual start; all under a complete engine protection system combined with full monitoring capability. If a fault is sensed at Start-up, the engine is locked out and will not start.

The choice of Auto or Manual Run mode is decided by authorized personnel during the generator set initial setup. An access code is required to switch between the Auto, Manual Run, or Off modes, and this facility may be permitted or denied by the authorized personnel during the initial setup of the generator set.

3.5 Starting the Generator Set

CAUTION

One operator should be in complete charge, or working under the direction of someone who is in complete charge. Remember that, upon starting the generator set, cables and switchgear will become energized, possibly for the first time. Furthermore, equipment that does not form part of the generator set installation may become electronically charged. Only authorized and competent personnel should carry out this work.

CAUTION

Do not use the Emergency Stop switch to shut down the generator set unless a serious fault develops. The Emergency Stop push-switch must not be used for a normal shut-down as this will prevent a cooling down run in which the lubricating oil and engine coolant carry the heat away from the engine combustion chamber and bearings in a safe manner.

CAUTION

Avoid off-load running for other than short periods. A minimum loading of 30% is recommended. This loading will help to prevent the build up of carbon deposits in the injectors, do to unburnt fuel, and reduce the risk of fuel dilution of the engine lubricating oil. The engine must be shut down as soon as possible after the appropriate functions have been checked.

Before attempting to start the generator set, the operator should read through this entire manual, together with the Health and Safety manual and the specific engine manual provided as part of the documentation package supplied with the generator set. It is essential that the operator be completely familiar with the generator set and the PowerCommand® controls.

The following sub-sections cover the systems used to start and stop the generator set. Before starting the generator set, make sure that exhaust and fuel fittings are tight and properly positioned, and proper maintenance and pre-start checks have been performed.

During starting, automatic checks are carried out for the integrity of various protection systems. The PowerCommand® control will not allow the generator set to continue the starting sequence if the integrity of a sensor is considered to be in doubt.

The generator set can be configured for a number of starting cycles (one to seven) with set times for crank and rest periods for all starting modes (manual/ remote). The default setting is for three start cycles, composed of fifteen seconds of cranking and 30 seconds of rest.

NOTE: *The number of starting cycles, and the crank and rest times are set from within the Setup menu. Trained and experienced service personnel are required to change the default setting. Contact your authorized distributor.*

NOTE: *Generator sets may be shipped dry. They must be filled with the correct type and quantity of oil before use. Be sure to check oil levels before initial start. Failure to fill to the recommended level can result in equipment damage.*

NOTE: *Check the coolant level and ensure the level is always maintained at the coolant expansion tank. Fill the cooling system to the bottom of the fill neck in the radiator fill or expansion tank. Do not check when the engine is hot.*

CAUTION

It is essential that Cummins Power Generation's recommendations for the correct type and concentration of anti-freeze and DCA inhibitor are complied with. Warranty claims for damage will be rejected if the incorrect mix has been used. Consult your authorized distributor for the correct anti-freeze specifications and concentration for your operating conditions.

NOTE: *Some radiators have two fill necks, both of which must be filled after the cooling system has been drained.*

CAUTION

Do not attempt to remove a radiator pressure cap while the generator set is running, or is still hot. Hot coolant is under pressure in the radiator system. Contact with hot coolant can result in severe burns. Always allow it to cool before releasing the pressure and removing the cap.

3.5.1 Starting at Operator Panel (Manual Run Mode)

WARNING

Make sure that all Pre-start Checks are carried out before starting the generator set. Do not attempt to start the generator set until it is safe to do so. Warn all others in the vicinity that the generator set is about to start.

To start the generator set in the Manual Run mode, press the Manual button on the Operator Panel, and then press the Start button within ten seconds. Failure to press the Start button within this time will result in the generator set changing to the Off mode.

(Refer also to Selecting Manual Run Mode in the appropriate controls manual. See Table 3-1 to determine the unit's control manual.).

The PowerCommand® control will initiate a starter cranking signal and will perform an automatically sequenced manual start, under a complete engine protection system combined with full monitoring capability. This will activate the engine control system and the starting procedure. The starter will begin cranking, and after a few seconds the engine will start and the starter will disconnect.

Should the engine fail to start, the starter will disengage after a specified period of time and the control will indicate a Fail to Start shutdown.

To clear a Fail to Start shutdown, press the Stop button and then press the Reset button. Before attempting to re-start, wait a minimum of two minutes for the starter motor to cool and then repeat the starting procedure. If the engine does not run after a second attempt, refer to the Troubleshooting Section of this manual and the appropriate controls manual. See Table 3-1 to determine the unit's control manual.

To disable Manual mode, change to Auto or Off mode. If the generator set is running when it leaves Manual mode, it will continue to run if Auto mode has been selected and the remote start signal is active. If there is no active remote start signal, the generator set will stop.

3.5.2 Starting from Remote Location (Auto Mode)

WARNING

Make sure that all Pre-start Checks are carried out before starting the generator set. Do not attempt to start the generator set until it is safe to do so. Warn all others in the vicinity that the generator is about to start.

To start the generator set in the Auto Run mode, select the Auto button from the Operator Panel. (Refer also to the Selecting Manual Run mode in the appropriate manual. See Table 3-1.

Only on receipt of a Remote Start signal, and after a Time Delay to Start, will the PowerCommand® control initiate the starting sequence as above.

The Remote Start LED will be illuminated.

There are two start modes that are selectable for the Remote Start input; one for non-emergency start and the other for emergency start. In the non-emergency start, the control will complete the warm-up at idle. In the emergency mode, the generator set will omit the warm-up stage and proceed directly to rated speed and voltage.

In response to the Remote Start signal, if the control detects the loss of Utility voltage, the control illuminates the Remote Start indicator and initiates the starting sequence as described in Starting at Operator Panel (Manual Run Mode), except for the following:

- In Auto position, the control will complete the Time Delay to Start (0 to 300 seconds) for a non-emergency start signal only.

NOTE: *If the mode change access code feature has been enabled, enter the access code when prompted. For more on Entering the Mode Change Access Code see the appropriate control manual. See Table 3-1 to determine the unit's control manual.*

To disable Auto mode, change to Manual or Stop mode. Refer to Stopping.

3.6 Cold Starting with Loads

WARNING

Make sure that all Pre-start Checks are carried out before stating the generator set. Do not attempt to start the generator set until it is safe to do so. Warn all others in the vicinity that the generator set is about to start.

Use an oil pan heater and a coolant heater if a separate source of power is available. The optional heater will help provide reliable starting under adverse weather conditions. Be sure the voltage of the separate power source is correct for the heater element rating.

Cummins recommends equipping diesel standby generator sets (life safety systems) with engine water jacket coolant heaters to maintain the coolant at a minimum of 32 °C (90 °F) and, for most applications, accept the emergency load in ten seconds or less. Although most Cummins generator sets will start in temperatures down to -32 °C (-25 °F) when equipped with engine water jacket coolant heaters, it might take more than ten seconds to warm the engine up before a load can be applied when ambient temperatures are below 4 °C (40°F).

To advise the Operator of a possible delay in accepting the load, the Low Coolant Temp (code 1435) message, in conjunction with illumination of the Warning LED, is provided. The engine cold sensing logic initiates a warning when the engine water jacket coolant temperature falls below 21°C (70 °F). In applications where the ambient temperature falls below 4°C (40°F), a cold engine may be indicated even though the coolant heaters are connected and functioning correctly. Under these conditions, although the generator set may start, it may not be able to accept load within ten seconds. When this condition occurs, check the coolant heaters for correct operation. If the coolant heaters are operating correctly, other precautions may be necessary to warm the engine before applying a load.

3.7 Stopping the Generator Set

NOTE: *The access code may be required before initiating the Off button sequence. Refer to Entering the Mode Change Access Code in the appropriate controls manual. See Table 3-1 to determine the unit's control manual.*

CAUTION

Run the generator set at no load for three to five minutes before stopping. This allows the lubricating oil and engine coolant to carry heat away from the combustion chamber and bearings.

3.7.1 Stopping at Operator Panel (Manual Mode)

If the generator set was started at the Operator Panel in Manual mode, Press the Stop button once to put the generator set into a Cooldown run, after which the set will enter the Off mode.

Pressing the Stop button twice will stop the generator set immediately, without a Cooldown run, after which the set will enter the Off mode.

NOTE: *If possible, hot shutdown under load should be avoided to help prolong the reliability of the set. A hot shutdown may result in a Hot Shutdown Warning.*

3.7.2 Stopping from Operator Panel (Auto Mode)

If the Generator set was started in Auto mode, press the Stop button once to stop the generator set immediately, without a Cooldown run, after which the generator set will enter the Off mode.

If possible re-start the generator set in Manual mode with the circuit breaker open, and allow to stop with a Cooldown run.

NOTE: *If possible, hot shutdown under load should be avoided to help prolong the reliability of the set. A hot shutdown may result in a Hot Shutdown Warning.*

3.7.3 Stopping from Remote Location (Auto Mode)

If the control received a remote stop signal, the generator set completes its normal shutdown sequence incorporating a Cooldown run. (The remote stop signal is actually the removal of the remote start signal to the control).

The generator set will stop after completing the following Cooldown sequence:

- Time Delay to Stop function (zero to 600 seconds)
- Cooldown at Idle 0 to 10 minutes or longer, if necessary to obtain normal operating temperature before shutdown.

The set will remain in Auto mode, and subject to a remote start signal, unless the Stop button is pressed. If the Stop button is pressed the set will enter the Off mode.

NOTE: *The InPower service tool or access to the Setup menu is required to enable and change the time delay start/stop settings. Contact your authorized distributor for assistance.*

3.7.4 Emergency Stop (Code 1433 or 1434)

The Local Emergency Stop button is located on the front of the Operator Panel. This is a mechanically latched switch that will unconditionally stop the engine when pressed, bypassing any time delay to stop. Push this button in for Emergency Shutdown of the engine.

NOTE: *If the engine is not running, pushing the button in will prevent the starting of the engine, regardless of the start signal source (Manual or Auto - remote).*

When the Stop button is pressed, the display panel will indicate the Shutdown condition by illuminating the red Shutdown status LED and displaying the following message on the graphical LCD display:

Fault Number: 1433 LOCAL EMERGENCY STOP

A Remote Emergency Stop button may be incorporated within the installation. If this Remote Emergency Stop button is activated the following message will be displayed:

Fault Number: 1434 REMOTE EMERGENCY STOP

To reset:

1. Pull, or twist and pull, the button out.
2. Press the Stop button on the Operator Panel to acknowledge this action.
3. Press the Reset button
4. Press the Auto or Manual Run button, as previously determined. (See Selecting Operating Modes in the appropriate controls manual.)

CAUTION

Do not use an Emergency Stop button to shut down an engine unless a serious fault develops. The Emergency Stop button must not be used for a normal shutdown as this will prevent a Cooldown run in which the lubricating oil and engine coolant carry away heat from the engine combustion chamber and bearings in a safe manner.

NOTE: *Make sure the remote start control is not active or, when the Emergency Stop is reset, the generator set could start running.*

CAUTION

Make sure the cause of the Emergency Stop is fully investigated and remedied before a fault reset and generator start are attempted.

NOTE: *An external Emergency button is located in close proximity to the Operator Panel viewing window.*

3.8 Paralleling Operation

Available with control PCC 3.3. Refer to PCC 3.3 control manual for further instruction. See Table 3-1 for controls manual number.

Section 4 - Troubleshooting

Fault code information together with Warning and Shutdown information is provided in this section to assist in locating and identifying the possible causes of faults in the generator set system. Refer also to the engine specific operator manual. This latter manual will contain further information regarding the running and care of the generator set and also specific equipment instructions that may differ from the standard generator set.

The PCC continuously monitors engine sensors for abnormal conditions, such as low oil pressure and high coolant temperature. If any of these conditions occur, the control will display a yellow warning lamp or a red shutdown lamp and display a message on the digital display.

NOTE: *This section lists the warning and shutdown codes/messages (Table 4-1), and suggests troubleshooting procedures.*

NOTE: *Refer to the troubleshooting instructions for each model specific Genset Controls manual as outlined in Figure 3-1.*

NOTE: *Displayed error codes on the PCC that are not listed in the Table generally require an authorized service representative to correct the fault. Before contacting an authorized service center for assistance, however, look up the previous fault in PCC Fault History to determine whether the real reason for generator set shutdown was ENGINE SHUTDOWN (PCC Code 1311). If engine shutdown is the cause, follow Code 1311 corrective procedures in Table 4-1 . The corrective procedure could be as simple as adding engine oil or coolant.*

4.1 Safety Considerations

WARNING

Contacting high voltage components can cause electrocution, resulting in severe personal injury or death. Keep the output box covers in place during troubleshooting.

CAUTION

High voltages are present when the set is running. Do not open the generator output box while the set is running.

WARNING

Ignition of explosive battery gases can cause severe personal injury or death. Arcing at battery terminals, light switches, or other equipment, flame, pilot lights and sparks can ignite battery gas. Do not smoke or switch trouble light ON or OFF near battery. Discharge static electricity from body before touching batteries by first touching a grounded metal surface.

Ventilate battery area before working on or near battery. Wear goggles. Stop genset and disconnect charger before disconnecting battery cables. Disconnect negative (-) cable first and reconnect last.

CAUTION

Disconnect battery charger from AC source before disconnecting battery cables. Otherwise, disconnecting cables can result in voltage spikes which are damaging to DC control circuits of the generator set.

WARNING

Accidental starting of the generator set can cause severe personal injury or death. Prevent accidental starting by disconnecting the negative (-) cable from the battery terminal.

When troubleshooting a set that is shut down, make certain the generator set cannot be accidentally restarted as follows:

1. Move the **Off/Manual/Auto** switch on the control panel to the **O** (off) position.
2. Turn off or remove AC power from the battery charger.
3. Depress E-stop.
4. Remove the negative (-) battery cable from the generator set starting battery.

4.2 Fault Finding

Should a fault condition occur during operation, follow the procedures in the following tables to locate and correct the problem. For any symptom not listed, contact your authorized distributor for assistance.

Before starting any fault finding actions, ensure that the following basic checks are carried out:

- All switches and controls are in their correct positions.
- The fuel oil level is correct.
- The lubricating oil is correct.
- The coolant level is correct.
- The area around the radiator and the radiator core are free from obstruction.
- The battery charge condition is satisfactory and connections are secure.
- The generator set electronics and alternator connections are secure.
- The panel connections are secure.
- The protection circuits have been replaced.
- Blown fuses have been replaced.
- Tripped contactors or circuit breakers have been reset.

4.3 Status Indicators

4.3.1 Not in Auto

The red lamp is illuminated when the control is NOT in Auto.

4.3.2 Remote Start

The green lamp indicates the control is receiving a Remote Run signal. The Remote Run signal has no effect unless the generator set is in Auto.

4.3.3 Warning

The yellow lamp is illuminated whenever the control detects a Warning condition. This lamp is automatically shut off when the warning condition no longer exists.

4.3.4 Shutdown Status

The red lamp is illuminated when the control detects a Shutdown condition. The generator set cannot be started when this lamp is on. After the condition has been corrected, the lamp can be reset by first pressing the stop button and then the release button.

4.3.5 Generating Set Running

The green lamp is illuminated when the generator set is running at, or near, rated speed and voltage. This is not illuminated when the generator set is warming up or cooling down.

4.4 Fault/Status Codes

WARNING

Many troubleshooting procedures present hazards that can result in severe personal injury or death. Only qualified service personnel with knowledge of fuels, electricity, and machinery hazards should perform service procedures. Accidental starting of the generator set while working on it can cause severe personal injury or death. Prevent accidental starting by disconnecting the starting battery leads (negative [-] first).

4.4.1 Fault Messages

A fault message is an indicator of a warning or shutdown condition. It includes the fault type (warning or shutdown) fault number, and a short description. It also includes where the fault occurred if the generator set control did not detect the fault and is simply reporting the fault.

4.4.2 Fault Acknowledgement

Shutdown faults must be acknowledged after the fault has been corrected. If in Auto or Manual mode, the control must be set to Stop mode (off). Faults are cleared from the control panel display by pressing the reset button.

Faults are also acknowledged when in Auto mode and the remote start command is removed.

Faults are re-announced if they are detected again after being acknowledged.

NOTE: *Gaps in the code numbers are for codes that do not apply to this generator set. Some of the codes listed are feature dependent and will not be displayed by this control.*

NOTE: *Some warnings remain active after the condition is corrected and the control reset button is pressed. This will require the genset to be shutdown to reset the warning indicator.*

4.5 Line Circuit Breaker

The optional line circuit breaker mounts on the generator output box. If the load exceeds the circuit breaker rating, the line circuit breaker will open, preventing the generator from being overloaded. If the circuit breakers trips, locate the source of the overload and correct as necessary. Manually reset the breaker to reconnect the load to the generator.

4.6 Control and Diagnostic Via Network or PC (laptop)

See your authorized Cummins Power Generation dealer regarding software, hardware and network requirements for control and diagnostics via network or PC.

4.7 Fault Codes

The fault codes have been divided into five categories to help you determine which corrective action to take for safe operation of the generator set. Use Table 4-1 to find the category and fault description for all codes. Gaps in the code numbers are for codes that do not apply to these gensets.

Refer to the troubleshooting instructions for each model specific Genset Controls manual as outlined in Figure 3-1 (same graphic as the installation manual).

Table 4-1 Fault codes

CODE	LAMP	DISPLAYED MESSAGE
111	Shutdown	Internal ECM Failure
115	Shutdown	Eng Crank Sensor Error
122	Warning	Manifold 1 Press High
123	Warning	Manifold 1 Press Low
124	Warning	Manifold 1 Press High
135	Warning	High Oil Rifle 1 Pressure
141	Warning	Low Oil Rifle 1 Pressure
143	Warning	Low Oil Rifle Pressure
144	Warning	High Coolant 1 Temp
145	Warning	Low Coolant 1 Temp
146	Derate	Pre-High Engine Coolant Temperature
151	Shutdown	High Coolant Temp
153	Warning	High Intake Manf 1 Temp
154	Warning	Low Intake Manf 1 Temp

4.8 Troubleshooting

The following information is intended as a guide to troubleshooting some common non-technical equipment problems. Many problems can be resolved using corrective maintenance, adjustment, or minor repair. Refer to the vendor supplied literature, electrical schematics, and mechanical prints for additional information. For engine related issues, refer to the Operation and Maintenance Manual or contact the Cummins Customer Assistance Center at 1-866-831-7620.

WARNING

The status checks should be performed ONLY by a qualified technician. Contact with exposed electrical components could cause extreme personal injury or death.

WARNING

Before equipment operation, ALL guards, covers, and protective devices MUST BE in place and securely fastened. Serious personal injury could result from contact with exposed or moving components.

CAUTION

AVOID SERVICING complex components such as: printed circuit boards, programmable controllers and ECM's not specifically authorized by Cummins Inc. Contact your local Cummins NPower Generator distributor before performing any extensive maintenance. In the United States or Canada, call 1-800-888-6626 (this automated service utilizes touch-tone phones only). By selecting Option 1 (press 1) you will be automatically connected to the nearest distributor.

CAUTION

Never climb or stand on the equipment frame, guards, or enclosures. Contact with exposed or moving components can cause personal injury or equipment damage.

Table 4-2 Troubleshooting Chart

PROBLEM	POSSIBLE CAUSE	SOLUTION
4.8.1 Engine will not Start	Low gas pressure.	Check gas pressure on utility side of gas regulator.
		Have gas regulator tested by gas company.
		Have gas company turn on gas.
		Check if there is 14 inches of water pressure at the engine solenoid. If not, check for gas pressure on utility side of gas regulator.
		Check if gas is turned off.
	No voltage at gas solenoid.	Check for 24 volts to gas solenoid. If voltage is present, replace the gas solenoid.
		Test gauge panel for no voltage to gas solenoid.
	Low water level after gas regulator.	Check that there is 7 inches of water pressure after engine mounted gas regulator when engine is cranking.
		Check if vent is blocked and clear blockage.
		Check regulator diaphragm for leaks.
	Air cleaner plugged or restricted.	Check piping and inlet for restriction.
		Change air filter.
	Governor actuator not opening.	Check if there is switched battery voltage at governor controller.
		If no voltage, test gauge panel for switched battery voltage.
		If switched battery voltage is present at governor controller, check for mag pickup voltage of at least 25 A/C volts.
		If no mag pickup voltage, check mag pickup adjustment to flywheel 1/2 to 3/4 turn out from flywheel.

Table 4-2 Troubleshooting Chart (Continued)

PROBLEM	POSSIBLE CAUSE	SOLUTION
4.8.1 Engine will not Start (continued)		Readjust or replace mag pickup as necessary.
		Check voltage between terminals 3 & 4 on governor controller (should be 4 to 6 volts).
		Check for voltage between pins 3 & 6 on actuator plug (should be 4 to 6 volts).
		Check for voltage at pin 4 on actuator plug (1.5 to 6 volts).
		Check harness from actuator to controller.
		Replace actuator harness as necessary.
		Replace governor actuator as necessary.
	No spark.	Check if timing mark in window on Altronic turning.
		Remove Altronic and check coupler. Replace coupler as necessary.
		Check engine for mechanical problems.
		Check for voltage to ignition coils.
		Test ignition harness. Replace as necessary.
		Test ignition coils. Replace as necessary.
		Test spark plug wires. Remove spark plugs and check for fouling. Replace bad spark plugs as necessary.
	Altronic timed to engine incorrectly.	Time Altronic to engine per service manual.
		Check engine for mechanical problems.

Table 4-2 Troubleshooting Chart (Continued)

PROBLEM	POSSIBLE CAUSE	SOLUTION
4.8.2 Engine will not Pull Load	Engine is running rough.	Check engine for misfiring.
		Check engine timing and adjust to specification.
		Check spark plugs. Replace bad spark plugs.
		Test spark plug wires. Replace bad spark plug wires.
		Test ignition coils. Replace bad ignition coils.
		Test ignition wiring from ignition module to coils. Replace bad ignition harness.
		Test ignition module. Replace bad ignition module.
		Check air filter for restriction. Replace air filter as necessary.
	Gas pressure dropping off at inlet side of utility gas regulator.	Have utility check gas pressure volume.
		Check that gas pressure to engine gas regulator is at specification. Adjust as necessary.
	No gas pressure at outlet side of the engine gas regulator.	Test engine mounted gas regulator.
	Turbo boost not within specifications.	Check intake system for air leaks or restrictions. Repair leak or restriction.
		Replace turbo as necessary.
	Governor not operating properly.	Check engine for mechanical problems.
		Check voltage between terminals 3 and 4 on governor controller (4-6 volts). Replace governor controller as necessary.
		Check for voltage at pin 4 on actuator plug to be (5-6 volts). Replace actuator as necessary.

Table 4-2 Troubleshooting Chart (Continued)

PROBLEM	POSSIBLE CAUSE	SOLUTION
4.8.3 Gill AFR Controller Module Flashing	Insufficient battery voltage.	Check for voltage at pin 1 of AFR plug. Check for voltage in PCC panel to TB-1-17 B and TB1-20 and. If voltage to panel is present, replace the gill module. Check switched battery voltage on pin 11 of AFR plug. Check for switched battery voltage in gauge panel TB1-19 and TB1-20. Check battery negative on pin 2 of AFR module. If good, replace AFR module. Check for battery negative at gauge panel TB1-20. If panel is not functioning properly, replace the PCC panel.
4.8.4 Gill AFR Center LED Illuminated	Module in closed loop.	Put AFR module in closed loop. Check if sensor temperature box is red. If box is red, replace the O_2 sensor. Check if fuel valve is out of range or not responding. If so, replace the fuel valve. If not, replace the AFR module.
4.8.5 Gill AFR Control Module not Communicating with Laptop	Laptop has faulty connections or cable.	Check connections and cable. If faulty, replace cable.
4.8.6 PCC Controls Fault Codes	Fault Code error	See applicable manual per Table 3-1

Section 5 - Maintenance

Engine and Generator set are to be operated in accordance with all manufacture's guidelines and recommendations.

Establish and adhere to a definite schedule for maintenance and service based on the application and severity of the environment. The recommended service intervals for a generator set on STANDBY power service is covered in Table 5-1 and for PRIME power service Table 5-2. If the set will be subjected to extreme operating conditions, the service intervals should be reduced accordingly. Some of the factors that can affect the maintenance schedule are the following:

- Extremes in ambient temperature
- Exposure to weather
- Exposure to salt water
- Exposure to dust, sand, or other airborne contaminates

Consult with your local Authorized Cummins Distributor if the generator set will be subjected to any extreme operating conditions and determine a suitable schedule of maintenance. Use the running time meter to keep an accurate log of all service performed for warranty support. Perform all service at the time period indicated or after the number of operating hours indicted, whichever comes first. Use Table 5-1 (Standby) or Table 5-2. (Prime) to determine the maintenance required and then refer to the sections that follow for the correct service procedures.

5.1 Owner/Operator Unit Compliance

Owner/Operator unit engine certification must be monitored and documented to remain in compliance with the EPA. Reference to the EPA SI NSPS final ruling can be found under Title 40 CFR 60.4243.

NOTE: *For complete information, the owner/operator should review entire Code of Federal Regulation.*

In general, the guidelines are as follows:

5.1.1 Base Drains (Optional)

Some units are equipped with drain extensions that allow for oil or coolant (or both) drains to be brought out to the base edge for convenient maintenance. These drains have an in-line ball valve or Fumoto valve installed for control. Remove the cap and open the valve to drain. Close the valve and restore the cap before refilling. Maintenance – Check end of drain line/valve for obstructions. Check all connections for leaks or worn parts.

5.1.2 If you operate and maintain the certified stationary SI internal combustion engine and control device according to the manufacturer's emission-related written instructions, you must keep records of conducted maintenance to demonstrate compliance, but no performance testing is required if you are an owner or operator.

5.1.3 If you Do Not operate and maintain the certified stationary SI internal combustion engine and control device according to the manufacturer's emission-related written instructions, your engine will be considered a non-certified engine, and you must demonstrate compliance according to 5.1.2.1 through 5.1.2.3 of this section, as appropriate.

5.1.3.1 If you are an owner or operator of a stationary SI internal combustion engine less than 100 HP, you must keep a maintenance plan and records of conducted maintenance to demonstrate compliance and must, to extent practicable, maintain and operate the engine in a manner consistent with good air pollution control practice for minimizing emissions, but no performance testing is required if you are an owner or operator.

5.1.3.2 If you are an owner or operator of a stationary SI internal combustion engine greater than or equal to 100 HP and less than or equal to 500 HP, you must keep a maintenance plan and records of conducted maintenance and must, to extent practicable, maintain and operate the engine in a manner consistent with good air pollution control practice for minimizing emissions. In addition, you must conduct and initial

performance test within 1 year of engine startup to demonstrate compliance.

5.1.3.3 If you are an owner or operator of a stationary SI internal combustion engine greater than 500 HP, you must keep a maintenance plan and records of conducted maintenance and must, to extent practicable, maintain and operate the engine in a manner consistent with good air pollution control practice for minimizing emissions. In addition, you must conduct and initial performance test within 1 year of engine startup and conduct subsequent performance testing every 8,760 hours or 3 years, whichever comes first, thereafter to demonstrate compliance.

Table 5-1 Periodic Maintenance Schedule For Standby Power Gensets

MAINTENANCE ITEMS	SERVICE TIME						
	*After First 24 Hours or 1 Year	Daily or after 8 Hours	*Monthly or after 100 Hours	After 150 Hours	*6 Months or after 250 Hours	*Yearly or after 500 Hours	After 1000 Hours
General set inspection		X[1]					
Oil pan heater		X					
Check engine oil level and reservoir (optional)		X					
Check coolant level		X					
Check coolant heater(s)		X					
Fuel heater		X					
Battery heater		X					
Control heater		X					
Breather heater		X					
Check air cleaner			X[2,3]				
Check all hardware (fittings, clamps, fasteners, etc.)			X				
Check battery electrolyte level			X				
Check generator air outlet			X				
Change engine oil and filter	X			X[2,8]			
Check radiator hoses for wear and cracks					X[4]		
Check drive belt					X[5]		
Check antifreeze concentration					X		
Check AC generator and controls					X[7]		
Clean cooling systems						X	
Replace spark plugs						X[6]	
Inspect or replace oxygen sensor						X[7,9]	
Overhaul cylinder heads							X
Periodic Emissions Testing							X[10]

Table 5-1 Periodic Maintenance Schedule For Standby Power Gensets

MAINTENANCE ITEMS	SERVICE TIME						
	*After First 24 Hours or 1 Year	Daily or after 8 Hours	*Monthly or after 100 Hours	After 150 Hours	*6 Months or after 250 Hours	*Yearly or after 500 Hours	After 1000 Hours

X^1 - Check for oil, fuel, cooling, and exhaust system leaks. Check exhaust system audibly and visually with set running and repair any leaks immediately.

X^2 - Perform more often in extremely dusty conditions.

X^3 - Replace element after 500 hours.

X^4 - Replace if hard or brittle.

X^5 - Visually check belt for evidence of warping or slippage. Replace if hard or brittle.

X^6 - Replace every 1000 hours.

X^7 - Must be performed by a qualified mechanic. Contact your authorized service center.

X^8 - Perform at least once a year.

X^9 - Replace every 1500 hours (recommended).

x^{10}- Retesting onsite is required on capable compliant generator sets per local, regional and national codes.

*Whichever comes first.

Table 5-2. Periodic Maintenance Schedule For Prime Power Gensets

MAINTENANCE ITEMS	SERVICE TIME					
	After First 24 Hours	24 Hours	100 Hours	250 Hours	500 Hours	1000 Hours
General set inspection		X[1]				
Oil pan heater		X				
Check fuel		X				X
Check battery		X				X
Check control		X				X
Check breather heater		X				X
Check engine oil level and reservoir (optional)		X				
Check coolant level		X				
Check coolant heater(s)		X				
Check air cleaner (heavy duty filter)			X[2,3]			
Check all hardware (fittings, clamps, fasteners, etc.)				X		
Check battery electrolyte level				X		
Check generator air outlet				X		
Change engine oil and filter	X			X[2]		
Check fuel filter element	X			X[2]		
Check radiator hoses for wear and cracks					X[4]	
Check drive belt					X[5]	
Check antifreeze concentration				X		
Check AC generator and controls					X[6]	
Clean cooling systems					X	
Replace spark plugs						X[3]
Inspect or replace oxygen sensor					X[6,8]	
Overhaul cylinder heads						X
Periodic Emissions Testing						X[9]

Table 5-2. Periodic Maintenance Schedule For Prime Power Gensets

MAINTENANCE ITEMS	SERVICE TIME					
	After First 24 Hours	24 Hours	100 Hours	250 Hours	500 Hours	1000 Hours

X^1 - Check for oil, fuel, cooling, and exhaust system leaks. Check exhaust system audibly and visually with set running and repair any leaks immediately.

X^2 - Perform more often in extremely dusty conditions.

X^3 - Replace every 2000 hours.

X^4 - Replace if hard or brittle.

X^5 - Visually check belt for evidence of warping or slippage. Replace if hard or brittle.

X^6 - Must be performed by a qualified mechanic. Contact your authorized service center.

X^7 - Replace every 1000 hours.

X^8 - Replace every 1500 hours (recommended)

X^9 - Retesting onsite is required on capable compliant generator sets per local, regional and national codes.

5.2 Generator Set Inspection

During operation, be alert for mechanical problems that could create unsafe or hazardous conditions. The following sections cover several areas that should be frequently inspected for continued safe operation.

With the generator set stopped, E-stop depressed, check for loose belts and fittings, leaking gaskets and hoses, or any signs of mechanical damage. If any problems are found, have them corrected immediately.

5.2.1 Catalyst-Removable Elements (Only available on some models)

Some Gensets require a 3-way or Oxidation catalyst to meet emission requirements. There is a precious metals element inside the housing of the catalyst that converts exhaust to EPA requirements. Some catalysts have a removable body that can be replaced with a new element when required. Check with your distributor or service technician for details on your product. Maintenance – Check manufacturer's recommended maintenance or replacement schedule.

5.3 Exhaust System

With the generator set operating, inspect the entire exhaust system visually and audibly, including the exhaust manifold, muffler, and exhaust pipe. Check for leaks at all connections, welds, gaskets, and joints and also make sure that exhaust pipes are not heating surrounding areas excessively. If any leaks are detected, shut down the generator set and have leaks corrected immediately.

WARNING

Inhalation of exhaust gases can result in severe personal injury or death. Be sure deadly exhaust gas is piped outside and away from any windows, doors, vents or other inlets to building and not allowed to accumulate in inhabitable areas.

5.3.1 Fuel Filters (Optional-MOH models only)

Our in-line fuel filters are designed for optimal performance of the generator set. They provide the best choice for Customers who want to extend service intervals and increase Genset uptime. Optional pressure indicators and automatic drains are available on some models. Check the installation and service manuals for your specific filter (models vary by unit) for details. Maintenance – Check pressure differential across the filter to ensure restriction is within operating range. If pressure loss is out of range, see owners manual to change filter.

5.3.2 Fuel Heater (Optional-MOH models only)

Fuel heaters are available on some MOH models. They are designed to provide heating of engine fuel for optimal performance of the Genset. The Fuel Heater is designed to provide uninterrupted fuel flow in cold temperature environments when it is needed most. Maintenance – Check heater for fuel flow to ensure minimal pressure loss during operation. See Owner's manual for regular maintenance schedule.

5.3.3 Regulator (Optional)

Prime regulators are available on some models for fuel pressure reduction from source. Regulators vary by manufacturer and model. Check with your distributor or service technician for details on use and settings of your Regulator. Maintenance – Check manufacturer's recommended maintenance schedule.

5.4 Fuel System

With the generator set operating, inspect the fuel supply lines, filters, and fittings for leaks. Check any flexible sections for cuts, cracks and abrasions and make sure they are not rubbing against anything that could cause breakage. If any leaks are detected, shut off fuel supply valves, shut down generator set and have them corrected immediately.

WARNING

Ignition of fuel can cause severe personal injury or death by fire or explosion. Do not permit any flame, cigarette, arcing switch or equipment, pilot light, or other igniter near the fuel system or in areas sharing ventilation.

5.5 AC Electric System

Check the following while the genset is operating. Frequency/RPM (Alternator/Engine Menu): The generator frequency should be stable under load and the reading should be the same as the genset name plate rating (60 Hz/1800 RPM).

AC Voltmeter (Alternator Menu): At no load, the line-to-line or line-to-neutral voltage(s) should be the same as the genset nameplate rating.

AC Ammeter (Alternator Menu): At no load the current ratings should be zero. With a load applied, each line current should be about the same.

Panel Lamp/Lamp Test Button: Press and hold this button to test all front panel LEDs and meters. The meters will light one bar at a time. Make sure that all LEDs and meters are operating and then release the button.

5.5.1 Battery Heater (Optional)

Battery heaters ensure the batteries are ready for starting the engine in cold standby conditions. They also protect against condensation during standby and prevent corrosive damage of electrical components in high humidity environments. Maintenance – Check to ensure wiring is entact (no shorts or frayed wires) and there are no obstructions around heater or batteries.

5.5.2 Control Heater (Optional)

Control heaters protect the control cabinet components from condensation during standby and prevent corrosive damage of electrical and mechanical components in high humidity environments. Maintenance – Check to ensure wiring is entact (no shorts or frayed wires) and there are no obstructions around heater.

5.5.3 Breather Heater (Optional)

This heater is designed to prevent crankcase breather freezing. The heater has a set point of 50° F. If the ambient temperature inside the enclosure drops below 50° F, the heater will automatically switch on. Maintenance – check to ensure wiring is entact (no shorts or frayed wires) and there are no obstructions around heater.

5.6 DC Electrical System

Check the terminals on the batteries for clean and tight connections. Loose or corroded connections create resistance which can hinder starting. Refer to BATTERIES later in this section for cleaning and safety precautions.

5.7 Engine

Monitor fluid levels and oil pressure and coolant temperatures frequently. Most engine problems give an early warning. Look and listen for changes in engine performance, sound, or appearance that can indicate service or repair is needed. Some engine changes to look for are as follows:

- Misfire
- Vibration
- Unusual noises
- Sudden changes in engine operating temperatures or pressures
- Excessive exhaust smoke
- Loss of power
- An increase in oil consumption
- An increase in fuel consumption
- Fuel, oil, or coolant leaks

5.8 Generator Set Maintenance (Battery Disconnected)

WARNING

Ignition of explosive battery gases can cause severe personal injury or death. Arcing at battery terminals, light switch or other equipment, flame, pilot lights and sparks can ignite battery gas. Do not smoke, or switch trouble light ON or OFF near battery. Discharge static electricity from body before touching batteries by first touching a grounded metal surface.

CAUTION

Ventilate battery area before working on or near battery—Wear goggles—Stop genset and disconnect charger before disconnecting battery cables—Disconnect negative (-) cable first and reconnect last.

CAUTION

Disconnect battery charger from AC source before disconnecting battery cables. Otherwise, disconnecting cables can result in voltage spikes damaging to DC control circuits of the set.

WARNING

Accidental starting of the generator set can cause severe personal injury or death. Prevent accidental starting by disconnecting the negative (-) cable from the battery terminal before beginning maintenance procedures.

When performing the following maintenance procedures, make certain the generator set cannot be accidentally restarted as follows:

1. Move the Off/Manual/Auto switch on the control panel to the O (off) position.
2. Turn off or remove AC power from the battery charger.
3. Depress E-stop.
4. Remove the negative (-) battery cable from the generator set starting battery

5.9 Lubrication System

Before the initial start, check dipstick to be sure crankcase is filled with oil. See Specifications for lubricating oil specifications and capacity in model specific engine manual.

CAUTION

Do not use 5W-30 engine oil in ambients above 0° C (32° F) because it may not provide adequate lubrication in this application.

5.9.1 Engine Oil Level

Check the engine oil level during engine shutdown periods at the intervals specified in the Maintenance Table. The dipstick is stamped with FULL and ADD to indicate the level of oil in the crankcase. For accurate readings, shut off the engine and wait approximately 10 minutes before checking the engine oil level. This allows oil in the upper portion of the engine to drain back into the crankcase.

WARNING

Crankcase pressure can blow out hot oil and cause severe burns. DO NOT check oil while the generator set is operating.

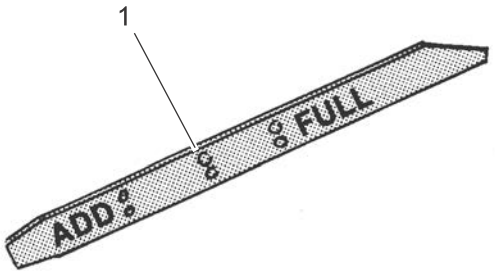

1. Normal Oil Level

Figure 5-1 Oil Level Dipstick

Keep the oil level between the FULL and ADD marks on the dipstick, see Figure 5-1. Remove the oil fill cap and add oil of the same quality and brand when necessary.

CAUTION

Do not operate the engine with the oil level below the ADD mark or above the FULL mark. Overfilling can lead to oil foaming and expulsion from the breather cap. Operation below the ADD mark can cause loss of oil pressure.

5.9.2 Engine Oil Change

NOTE: *Disconnect oil pan heater and coolant heater (if equipped) prior to changing oil. Reconnect heaters once oil change is complete.*

WARNING

State or federal agencies have determined that contact with used engine oil can cause cancer or reproductive toxicity. Do not contact oil or breathe vapors. Use rubber gloves and wash exposed skin.

WARNING

Used oil and filters must be disposed of properly to avoid environmental damage and clean-up liability. Check all federal, state and local regulations for disposal requirements.

Run the engine until thoroughly warm before draining the oil. Stop the set, place a pan under the drain outlet and remove the oil drain plug or open the drain valve. After the oil is completely drained, replace the drain plug or close the drain valve. Refill to proper level with oil of the correct API viscosity grade and type for the temperature conditions. Refer to engine manual for model specification information.

WARNING

Hot crankcase oil can cause burns if it is spilled or splashed on skin. Keep fingers and hands clear when removing the oil drain plug and wear protective clothing.

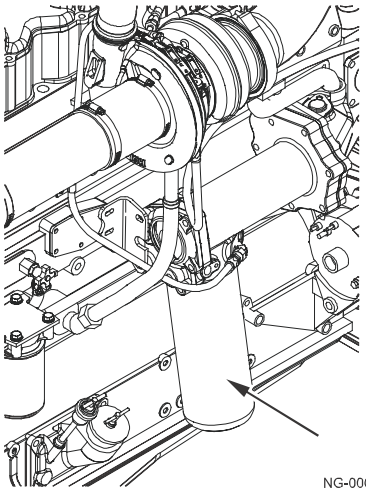

Figure 5-2 Oil Filter

5.9.3 Oil Filter Change

Spin off the oil filter and discard it in accordance with local environmental regulations. Thoroughly clean filter mounting surface.

Fill the oil filter with clean lubricating oil. To fill, pour the oil into the center hole of the filter.

Apply a thin film of oil to filter gasket and install new element. Spin element on by hand until gasket just touches mounting pad and then turn an additional 1/2 to 3/4 turn. Do not overtighten Please see Figure 5-2 for location.

With oil in crankcase, start engine and check for leaks around filter element. Retighten only as much as necessary to eliminate leaks but do not overtighten.

5.9.4 Oil Reservoir (Optional)

5 or 10 gallon Oil Tanks are optional on some units to allow for extended service intervals between maintenance. These tanks are typically plumbed to an Oil Maintainer Switch that controls the flow into the engine oil pan. It is imperative the switch is functioning properly without obstruction and if the switch is vented, the vent is not obstructed as well. The tank should be filled with oil per Engine Manufacturer guidelines. Maintenance – Check all connections for leaks or worn parts.

5.10 Cooling System

The cooling system capacity of a standard unit with set mounted radiator is shown in Specifications section. **Gensets are normally shipped with coolant added. Be sure to check coolant level before initial start.**

5.10.1 Coolant Requirements

Satisfactory engine coolant inhibits corrosion and if necessary protects against freezing. Use a 50/50 coolant solution (50% pure water and 50% antifreeze). If temperatures below -38° C (-37° F) are possible, use a mixture of 65% antifreeze and 35% water. Do not use an antifreeze that contains anti-leak additives.

The water used for engine coolant should be clean, low in mineral content and free of any corrosive chemicals such as chloride, sulfate or acid. Use soft water. Well water often contains lime and other materials which eventually can clog the radiator core and reduce the cooling efficiency and can also cause heater element failure.

Table 5-3.

Etheylene-Glycol	Propylene-Glycol
40% = -23° C (-10° F)	40% = -21°C (-6° F)
50% = -37° C (-34° F)	50% = -33°C (-27° F)
60% = -54° C (-65° F)	60% = -54°C (-65° F)
68% = -71° C (-90° F)	68% = -63°C (-82° F)

5.10.2 Filling the Cooling System

CAUTION

The engine can overheat and be damaged if coolant is filled improperly.

Check to make sure that all drain cocks are closed and all hose clamps secure. Remove the pressure cap (Figure 5-3) and slowly fill the cooling system with the recommended coolant.

Do not add cold coolant to a hot engine. Engine castings can be damaged. Allow the engine to cool to below 50° C (120° F) before adding coolant. When the engine is first started monitor the coolant level. As trapped air is expelled from the system, the coolant level may drop and additional coolant must be added. Replace the pressure cap after coolant has been added.

5.10.3 Coolant Level

Check the coolant level during shutdown periods at the intervals shown in Table 5-1. Remove the pressure cap after allowing the engine to cool and add coolant as necessary to keep the fluid level visible in the sight glass.

WARNING

To prevent severe scalding, let engine cool down before removing coolant pressure cap. Turn cap slowly, and do not open it fully until the pressure has been relieved.

CAUTION

Loss of coolant can allow engine to overheat without protection of shutdown device and cause severe damage to the engine. Maintain coolant level for proper operation of the high engine temperature shutdown system.

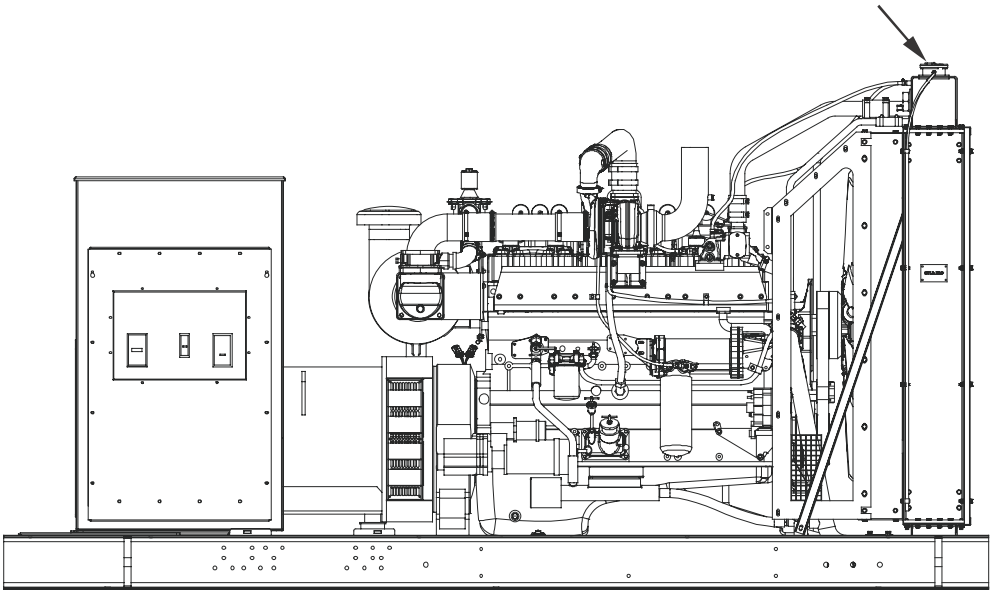

NG-00048

Figure 5-3 Coolant Pressure Cap (Typical)

5.10.4 Draining and Flushing

WARNING

Some coolant is toxic. Keep away from children and animals. Follow local environmental regulations for disposal.

To maintain adequate corrosion protection and remove rust and scale deposits, drain and flush radiator at the recommended interval.

CAUTION

The heater element will burn out if engine coolant is removed with heater connected to power source.

1. Disconnect engine coolant heater from power source (if equipped).
2. Allow the engine to cool and then remove radiator pressure cap.
3. Open the radiator drain cock and remove the water drain plugs (one on each side of engine). When the coolant is drained, place the end of a water hose into the radiator fill port and turn on water supply.
4. Regulate the flow of water into the radiator until it is equal to the outflow from drain openings.
5. Continue flushing until outflow from drains is clear of rust sediment.

NOTE: *If engine is equipped with engine coolant heater, drain coolant by removing hose and clamp from bottom of heater.*

6. Replace the water drain plugs and close the radiator drain cock when flushing is complete.
7. Refill the cooling system with the recommended coolant (refer to Filling the Cooling System 5.9.2).
8. With cooling system properly filled and the engine has been run, connect heater plug to receptacle.

CAUTION

The heater element will burn out if power is connected before it is filled with coolant or if straight antifreeze solution is used for coolant. Before connecting power, fill the engine with coolant and run it for a while to circulate coolant through the heater.

5.10.5 Radiator

Inspect the exterior of the radiator for obstructions. Remove all dirt or foreign material with a soft brush or cloth. Use care to avoid damaging the fins. If available, use low pressure compressed air or stream of water (maximum of 242 kPa [35 psi]), in the opposite direction of normal air flow to clean radiator. If using water, protect the engine and the generator from over spray.

5.10.6 Coolant Heater

Check the operation of the coolant heater by verifying that hot coolant is being discharged from the outlet hose. ***Do not touch outlet hose*** - if heater is operational, radiant heat should be felt with hand held close to outlet hose.

WARNING

Contact with cooling system or engine can result in serious burns. Do not touch cooling system or engine during genset maintenance until they are cool.

5.11 Air Filter

Clean air filter every 100 hours of operational time, more often in extremely dusty conditions. Replace air filter as needed.

The following procedure should be followed when cleaning or replacing the element.

1. Remove cover and filter. Tap filter on a flat surface to remove dirt.
2. Place a light source inside filter and inspect for air passage. If necessary, apply a low pressure air source (207 kPa [30 psi]) to the inside of filter to remove as much dirt as possible.
3. Install air filter, then cover and secure.

5.12 Belt Replacement

This section identifies how to install replacement belts. Refer to Figure 5-4.

5.12.1 Belt Removal - Spring Tensioner

1. Depress E-Stop.
2. Disconnect the negative (-) cable from the battery to prevent accidental starting.
3. Remove belt guard or side fan guard (between engine and radiator) to gain access to the belt.
4. Using a socket wrench, rotate the tensioner pulley arm away from the belt and remove the belt(s).

WARNING

The belt idler is under tension. Do not allow your hands to get between the belt and pulley. Personal injury will result.

5.12.2 Belt Installation - Spring Tensioner

1. Slip the belt onto all but one pulley.

WARNING

The belt idler is under tension. Do not allow your hands to get between the belt and pulley. Personal injury will result.

2. Rotate the tensioner pulley arm away from the belt and position the belt over the alternator pulley. Slowly release the belt tensioner pulley arm onto belt.

NOTE: *The spring-loaded idler used on this design maintains the correct belt tension.*

3. Install belt guard or fan guard.
4. Connect the negative (-) cable to the battery.
5. Clear the E-Stop.
6. Start genset and visually check belt for proper alignment with engine running.

NOTE: *Always wear proper PPE when starting and checking genset.*

5.12.3 Belt Removal - Manual Tensioner

1. Depress E-Stop.
2. Disconnect the negative (-) cable from the battery to prevent accidental starting.
3. Remove belt guard or fan guard (between engine and radiator) to gain access to the belt
4. Loosen the jam nut on the sliding pulley assembly.
5. Loosen the tightener bolt to allow the sliding pulley to move releasing belt tension and remove the belt(s).

5.12.4 Belt Installation - Manual Tensioner

NOTE: *Always wear proper PPE when starting and checking genset.*

1. Slip belt(s) onto all pulleys
2. Tighten the tensioner bolt to the correct amount of belt tension. Measure tension on belt(s) using Cummins ST1138 belt tension gauge. Refer to Table 7-1 Drive Belt Tension Table in Section 7.
3. Tighten jam nut on sliding pulley assembly. Torque to appropriate value based on the Table 7-2 Torque Table in Section 7.
4. Re-check belt tension using belt tension gauge, Cummins ST1138, to verify tension from step 2.
5. Install belt guard or fan guard.
6. Connect the negative (-) battery cable to the battery.
7. Clear the E-Stop.
8. Start genset and visually check belt for proper alignment with engine running.

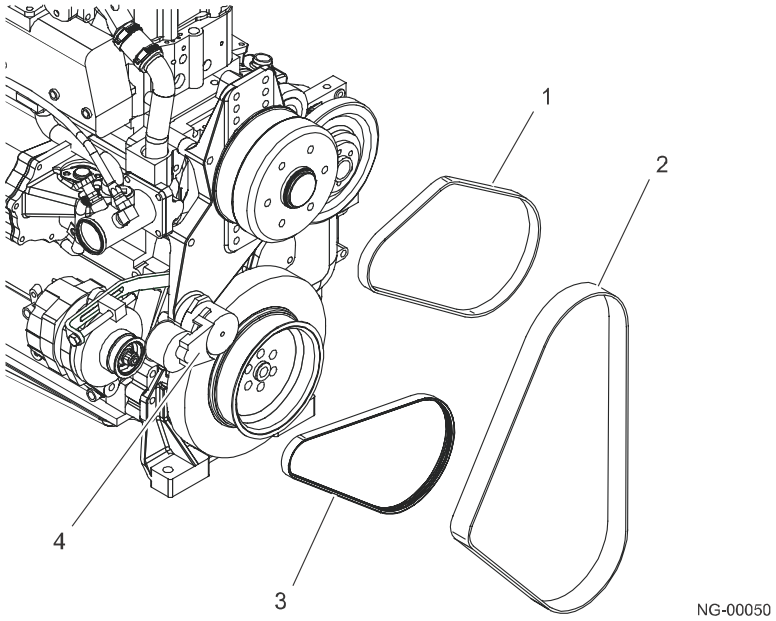

1. Auxiliary Drive Belt (if equipped)
2. Fan Drive Belt(s)
3. Alternator Drive Belt(s)
4. Tensioner Arm

Figure 5-4 Belt Replacement (Typical)

5.13 Ignition System

The ignition system consists of the ignition module, ignition coil packs, high tension wires and spark plugs. Maintenance consists of periodic inspections to detect possible problems and replacement of worn or deteriorated parts. The ignition system must be completely functional or the set may run poorly or be unable to carry full load. Perform the following inspections at recommended intervals.

5.13.1 Spark Plugs

Replace the spark plugs at the intervals specified in the Maintenance Table. If the spark plugs show any of the following conditions, the engine may require additional service. Contact your authorized service distributor for help.

- Carbon Fouled - Overly Rich Mixture
- Oil Fouled - High oil consumption
- Burned - Excessive engine temperature

Before installing new spark plugs:

- Clean all dirt and grit away from the spark plug seats.
- Check each spark plug gap and reset as necessary to 0.076 cm (0.030 in). Refer to Figure 5-5 and model specification for part information. See also Section 7 for information on ordering replacement parts.
- Lightly lubricate spark plug threads with high temp anti-seize compound.

5.13.2 High Tension Wires

Check the spark plug wires for good contact at the ignition coil pack and spark plugs. Terminal connections should be tight and fully seated. All spark plug covers and cable end boots should be in good condition and fit tightly. There should be no breaks or cracks in the insulation. Replace the wire if any of these conditions are noted.

5.13.3 Ignition Coil Packs

Check for cracks, carbon tracks or corrosion on the ignition coil packs. Replace a coil pack if any of these conditions are noted.

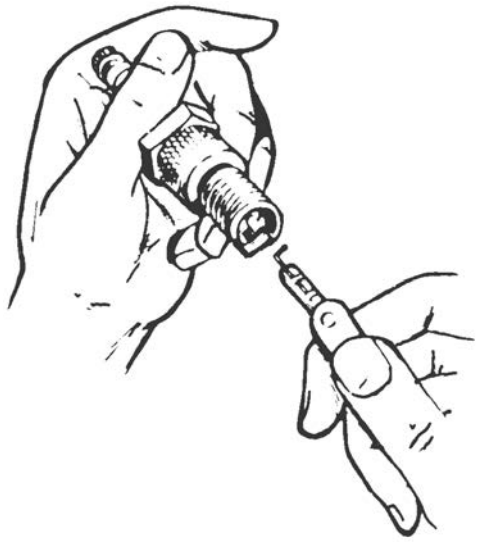

NG-00051

Figure 5-5 Gapping Spark Plugs

5.14 Batteries

WARNING

Ignition of explosive battery gases can cause severe personal injury or death. Arcing at battery terminals, light switch or other equipment, flame, pilot lights and sparks can ignite battery gas. Do not smoke, or switch trouble light ON or OFF near battery. Discharge static electricity from body before touching batteries by first touching a grounded metal surface.

CAUTION

Ventilate battery area before working on or near battery—Wear goggles—E-Stop genset and disconnect charger before disconnecting battery cables—Disconnect negative (-) cable first and reconnect last.

CAUTION

Disconnect battery charger from AC source before disconnecting battery cables. Otherwise, disconnecting cables can result in voltage spikes damaging to DC control circuits of the set.

Check the condition of the starting batteries at the interval specified in the Maintenance Table. To prevent dangerous arcing, always E-stop then disconnect the negative ground cable from the battery before working on any part of the electrical system or the engine.If using a maintenance free battery Disregard this sections On Checking Specific Gravity and Checking Electrolyte Level if using a “maintenance-free” battery.

5.14.1 Cleaning Batteries

WARNING

Electrolyte is a dilute sulfuric acid that is harmful to the skin and eyes. Do not get the substance in your eyes or contact with skin. Wear goggles and protective, rubber gloves and apron when servicing batteries.

WARNING

In case of contact, immediately wash skin with soap and water. In case of contact, immediately flood eyes with large amounts of water for a minimum of 15 minutes. IMMEDIATELY CALL A PHYSICIAN.

Keep the batteries clean by wiping them with a damp cloth whenever dirt appears excessive.

If corrosion is present around the terminal connections, remove battery cables and wash the terminals with a solution consisting of 1/4 pound (11 Kg) of baking soda added to 1 quart (.94 Liters) of water. (This solution is also used for washing down spilled electrolyte.)

Be sure the vent plugs are tight to prevent cleaning solution from entering the cells.

After cleaning, flush the outside of the battery and surrounding areas with clean water.

Keep the battery terminals clean and tight. After making connections, coat the terminals with a light application of petroleum jelly or non-conductive grease to retard corrosion.

5.14.2 Checking Specific Gravity

Use a battery hydrometer to check the specific gravity of the electrolyte in each battery cell.

Hold the hydrometer vertical and take the reading. Correct the reading by adding four gravity points (0.004) for every ten degrees the electrolyte temperature is above 27° C (80° F). A fully charged battery will have a corrected specific gravity of 1.260. Charge the battery if the reading is below 1.215.

5.14.3 Checking Electrolyte Level

CAUTION

Do not add water in freezing weather unless the engine will run long enough (two to three hours) to assure a thorough mixing of water and electrolyte.

Check the level of the electrolyte (acid and water solution) in the batteries at least every 200 hours of operation.

If necessary, fill the battery cells to the bottom of the filler neck with distilled water and recharge. If one cell is low, check case for leaks. Keep the battery case clean and dry. An accumulation of moisture will lead to a more rapid discharge and battery failure.

5.14.4 Battery Replacement

Always replace the starting battery with the same number and type (vented, lead acid). Properly dispose of battery in accordance with local environmental agency requirements.

WARNING

Electrolyte or explosion of battery can cause severe personal injury or death. Do not burn the battery in a fire for disposal.

Damage to case will release electrolyte which is harmful to the skin and eyes and is also toxic. Burning of battery may cause an explosion.

5.14.5 NiCad Batteries

NiCad (nickel-cadmium) battery systems are often specified where extreme high or low ambient temperature is expected because their performance is less affected by temperature extremes than that of lead-acid batteries.

NiCad batteries require special battery chargers in order to bring them to the full-charge level. These chargers must be provided with filter to reduce “charge ripple” which can disrupt engine and generator control systems.

5.15 Out-of-Service Protection

When the set will be stored or removed from operation for an extended period of time, take the following precautions to prevent rust accumulation, corrosion of bearing surfaces within the engine and gum formation in the fuel system. Perform the following procedures as outlined in this manual.

5.15.1 Preparing Set for Storage

1. For engine start up, follow operation steps as described in Section 3 until the engine is up to operating temperature.
2. Shut down the engine.
3. Depress E-stop.
4. Turn off and disconnect the battery charger (if equipped).
5. Disconnect the battery (negative [-] first) and store in a cool, dry place. Connect the battery to the charger every 30 days to maintain it at full charge.
6. Drain the engine oil while still warm and refill with new oil recommended for the set. Attach a tag indicating the type of oil used.
7. Remove the spark plugs and pour two ounces of rust preventative oil into each spark plug opening. Barr engine over to complete three to four rotations of the crank shaft to distribute the oil on the cylinder walls and then reinstall the spark plugs.
8. Disconnect the engine coolant heater from the power source (if equipped).
9. Drain the cooling system, including the engine block.
10. Remove the air cleaner and seal off the carburetor air inlet opening and PVC hose.
11. Plug the exhaust outlets to prevent entrance of moisture, bugs, dirt, etc.
12. Disconnect oil pan heater and engine coolant heater from power source (if equipped).
13. Clean and wipe the entire unit. Coat parts susceptible to rust with a light coat of oil. Cover the entire set loosely after the engine has cooled down.

5.15.2 Returning Set to Service

NOTE: *Always wear proper PPE before starting genset.*

1. Remove the protective cover.
2. Remove exhaust plugs, seal from carburetor and PVC hose, and replace air cleaner.
3. Check the oil dipstick to make sure the crankcase is full.

4. Refill the cooling system per model specifications provided with the unit. See model specific engine manual or specification sheet for model specification information.
5. Reconnect the battery (positive [+] cable first) and check specific gravity.
6. Connect the battery charger (if applicable).
7. Connect the oil pan heater and engine coolant heater to the power supply (if equipped).
8. Clear the E-stop.
9. Remove all loads before starting the set.
10. Start the set and apply load of at least 50% of data plate rating.
11. Check the display for normal readings. The set is now ready for service.

Section 6 - Operating Recommendations

6.1 No-Load Operation

Periods of no load operation should be held to a minimum. If it is necessary to keep the engine running for long periods of time when no electric output is required, the best engine performance will be obtained by connecting a load bank of at least 30 percent of nameplate rating.

6.2 Exercise Period

Generator sets on continuous standby must be able to go from a cold start to being fully operational in a matter of seconds. This can impose a severe burden on engine parts.

Regular exercising keeps engine parts lubricated, prevents oxidation of electrical contacts and in general helps provide reliable engine starting.

Exercise the generator set at least once a month for a minimum of 30 minutes, under not less than 30 percent of the nameplate rating.

6.3 Low Operating Temperature

Use an oil pan heater and/or coolant heater if a separate source of power is available. The optional heater(s) will help provide reliable starting under adverse weather conditions. Be sure the voltage of the separate power source is correct for the heater element rating.

CAUTION

To avoid damage to heater(s), be sure that oil and coolant system s are full before applying power to the heater(s).

6.4 High Operating Temperature

Refer to the model specification information provided with the unit (refer to Section 7 for instructions on finding model specific information) for the maximum ambient operating temperature, if applicable.

6.5 Natural Gas Engine Guidelines for Low -Load operation.

6.5.1 Low- Load Operations

Cummins natural gas engines can be operated at low loads as long as the time at low loads does not exceed Cummins recommendations. Operating at low loads causes low intake manifold pressures which can result in higher-than-normal oil lubrications of the valves, rings and liners. Excess oil consumption over long periods of time causes carbon deposits that will result in a misfire condition due to spark plug fouling or excessive carbon build up on the valves, head and rings

6.5.2 Recommended Hours of Operation at Low Loads

Table 6-1details the maximum length of time that Cummins engines should be run at various load conditions. For example, Cummins natural gas engines should not be run for more then 4 hours at a 10% load. % load = Ratio of actual load to rated load X100 during a specified time period of operation. After a period of low-load operation the engine should be operated at higher loads as described in the next section.

As additional examples, an engine should not be run for more then 24 hours at a 40% load or 8 hours at a 20% load. The hours at a low-load are cumulative, i.e. stopping an engine after 2 hours at 10% load does not mean that an additional 4 hours at 10% load is available.

NOTE: *At a load of > 70% the engines can be run continuously without excessive oil consumption or excessive carbon deposits.*

Table 6-1 Low-Load Time Limits

Maximum Engine Run Times at Low-Load Conditions		
Percent Load (%)	Maximum Low-Load Hours	Hours of Operation at >70% Load After a Period of Low-Load
Low Idle (no load)	1	2
High Idle (no load)	2	4
10	4	8
20	8	16
30	12	24
40	24	48
50	50	100
60	100	200
70	continuous	n/a
80	continuous	n/a
90	continuous	n/a
100	continuous	n/a

6.5.3 Recommended Operation After Maximum Low-Load Time Limit Reached

Once the engine has reached the maximum time limit at any operation load the engine should be run at greater than 70% load. The engine should be run at a minimum of 70% load for at least twice the length of time that it was run at the low-load level before operating again at a low-load level. (refer to the last column of Table 6-1.

For example, if the engine has been running 12 hours at 30% load, it should be run for at least 24 hours at a >70% rated load before a light load is applied. Running the engine for at least twice the length of time at the low-load levels allows the engine to burn the excess oil deposits of the spark plugs, valves, heads and rings.

Section 7 - Component Parts and Specifications

7.1 Part Ordering Information

Replacement parts for the Cummins Inc. equipment are manufactured to the same quality standards and specifications as the original equipment. Unapproved substitution may result in poor performance, reduced service life, lost production, or unsafe operation.

Cummins Inc. relies on the best and most cost effective shipping methods, unless specific instructions or requirements are requested by the customer. When ordering parts, please be prepared to provide the following information.

PARTS REQUESTS REQUIRE:

1. Model and serial number.
2. Part description by name or number.
3. Quantity required.
4. Purchase order number.

NOTE: *A purchase order number is desirable, even if the part(s) are supplied on a Returned Goods Authorization (RGA) issue number. A purchase order number helps Cummins NPower, LLC and its customers track the parts and necessary credits.*

7.2 Routine Service and Parts

Personnel at Cummins Authorized Repair Locations can assist you with the correct operation and service of your engine. Cummins has a worldwide service network of more than 5,000 Distributors and Dealers who have been trained to provide sound advice, expert service, and complete parts support.

Check the telephone directory yellow pages or refer to the directory in this section for the nearest Cummins Authorized Repair Location.

7.3 Emergency Repairs and Technical Service

The Cummins Customer Assistance Center provides a 24-hour, toll free telephone number to aid in technical and emergency service when a Cummins Authorized Repair Location can not be reached or is unable to resolve an issue with a Cummins product.

If assistance is required, call Toll-Free: 1-800-DIESELS (1-800-343-7357). Includes all 50 states, Bermuda, Puerto Rico, Virgin Islands, and the Bahamas.

Outside of North America contact your Regional Office. Telephone numbers and addresses are listed in the International Directory.

Refer also to the Cummins Inc. web site at www.cummins.com.

7.4 Recommended Spares Inventory

To minimize downtime and increase productivity, Cummins Inc. recommends maintaining a stock of spare parts critical to uninterrupted engine operation. Shipping costs can be lower using ground transportation rather than overnight or next day air freight. For this reason Cummins Inc. can provide a list of recommended spare parts. Contact the Cummins Authorized Repair Location for additional information.

7.5 Specifications

For model specific information see the specification data sheet provided with the genset. You can also view the specifications sheet and genset drawings by visiting our website at www.cumminsnpower.com.

Table 7-1 Drive Belt Tension Table

SAE Belt Size	Belt Tension New		Belt Tension Range Used	
	N	lbf	N	lbf
0.380 in	620	140	270 to 490	60 to 110
0.440 in	620	140	270 to 490	60 to 110
1/2 in	620	140	270 to 490	60 to 110
11/16 in	620	140	270 to 490	60 to 110
3/4 in	620	140	270 to 490	60 to 110
7/8 in	620	140	270 to 490	60 to 110
4 rib	620	140	270 to 490	60 to 110
5 rib	670	150	270 to 530	60 to 120
6 rib	710	160	290 to 580	65 to 130
8 rib	890	200	360 to 710	80 to 160
10 rib	1110	250	440 to 890	100 to 200
12 rib	1330	300	530 to 1070	120 to 240
12 rib K section	1330	300	890 to 1070	200 to 240
31 rib	1668	375	1330 to 1560	300 to 350

Table 7-2 Torque Table

Cap Screw Markings and Torque Values

CAUTION

Always use a cap screw of the same measurement and strength as the cap screw being replaced. Using the wrong cap screws can result in engine damage.

Always use the torque values listed in the following tables when specific torque values are not available.

When the ft-lb value is less than 10, convert the ft-lb value to in-lb to obtain a better torque with an in-lb torque wrench. Example: 6 ft-lb equals 72 in-lb.

Metric Cap Screw Identification

Sample:	**M8-1.25 x 25**		
Value:	**M8**	**1.25**	**X 25**
Meaning:	Major thread diameter in millimeters	Distance between threads in millimeters	Length in millimeters

Metric Cap Screw Head Markings

Metric cap screws and nuts are identified by the grade number stamped on the head of the cap screw or on the surface of the nuts.

Commercial Steel Class	**8.8**	**10.9**	**12.9**
Caps Screw Head Markings			

US Customary Cap Screw Identification

Sample:	**5/16 x 18 x 1-1/2**		
Value:	**5/16**	**18**	**1-1/2**
Meaning:	Major thread diameter in inches	Number of threads per inch	Length in inches

U.S. Customary Cap Screw Head Markings

U.S. Customary cap screws are identified by radial lines stamped on the head of the cap screw.

SAE Grade 5 w/ three lines	**SAE Grade 8**
	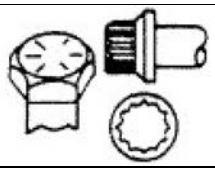

Table 7-2 Torque Table (Continued)

Metric Cap Screw Torque Values (lubricated threads)

Class:	8.8				10.9				12.9			
Diameter	Cast Iron		Aluminum		Cast Iron		Aluminum		Cast Iron		Aluminum	
mm	N•m	ft-lb	N•m	ft-lb	N•m	ft-lb	N•m	ft-lb	N•m	ft-lb	N•m	ft-lb
6	9	5	7	4	13	10	7	4	14	9	7	4
7	14	9	11	7	18	14	11	7	23	18	11	7
8	23	17	18	14	33	25	18	14	40	29	18	14
10	45	33	30	25	65	50	30	25	70	50	30	25
12	80	60	55	40	115	85	55	40	125	95	55	40
14	125	90	90	65	180	133	90	65	195	145	90	65
16	195	140	140	100	280	200	140	100	290	210	140	100
18	280	200	180	135	390	285	180	135	400	290	180	135
20	400	290	—	—	550	400	—	—	—	—	—	—

U.S. Customary Cap Screw Torque Values (lubricated threads)

Grade:	SAE Grade 5				SAE Grade 8			
Cap Screw Body Size	Cast Iron		Aluminum		Cast Iron		Aluminum	
	N•m	ft-lb	N•m	ft-lb	N•m	ft-lb	N•m	ft-lb
1/4-20	9	7	8	6	15	11	8	6
1/4-28	12	9	9	7	18	13	9	7
5/16-18	20	15	16	12	30	22	16	12
5/16-24	23	17	19	14	33	24	19	14
3/8-16	40	30	25	20	55	40	25	20
3/8-24	40	30	35	25	60	45	35	25
7/16-14	60	45	45	35	90	65	45	35
7/16-20	65	50	55	40	95	70	55	40
1/2-13	95	70	75	55	130	95	75	55
1/2-20	100	75	80	60	150	110	80	60
9/16-12	135	100	110	80	190	140	110	80
9/16-18	150	110	115	85	210	155	115	85
5/8-11	180	135	150	110	255	190	150	110
5/8-18	210	155	160	120	290	215	160	120
3/4-10	325	240	255	190	460	340	255	190
3/4-16	365	270	285	210	515	380	285	210
7/8-9	490	360	380	280	745	550	380	280
7/8-14	530	390	420	310	825	610	420	310
1-8	720	530	570	420	1100	820	570	420
1-14	800	590	650	480	1200	890	650	480

Section 8 - Wiring Diagrams

8.1 General

This section consists of the schematic and connection wiring diagrams referenced in the text. The following drawings are included.

Wiring Diagrams - Electronic Engines

Drawing Title	Drawing No.	Rev.
Schematic, Controls Interface GFBC GTA855E w/ PCC 1302	GFBC-PCC 1.3 Wiring	B
Schematic, Controls Interface GFBC GTA855E w/ PCC 2300	GFBC-PCC 2.3-Wiring	B
Schematic, Controls Interface GFBC GTA855E w/ PCC 3300	GFBC-PCC 3.3-Wiring	B
Schematic, Controls Interface GFEB KTA19SLB w/ PCC 1302	GFEB-PCC 1.3 Wiring	A
Schematic, Controls Interface GFEB KTA19SLB w/ PCC 2300	GFEB-PCC 2.3-Wiring	A
Schematic, Controls Interface GFEB KTA19SLB w/ PCC 3300	GFEB-PCC 3.3-Wiring	A
Schematic, Overall GFPA Model 150 w/PCC 1.1/PCC 2.2	22726	-

Wiring Diagrams - Hydro-Mechanical Engines

Drawing Title	Drawing No.	Rev.
Schematic, Controls Interface HM ENG w/PCC 1302	25538	-
Schematic, Controls Interface HM ENG w/PCC 3300	25539	-

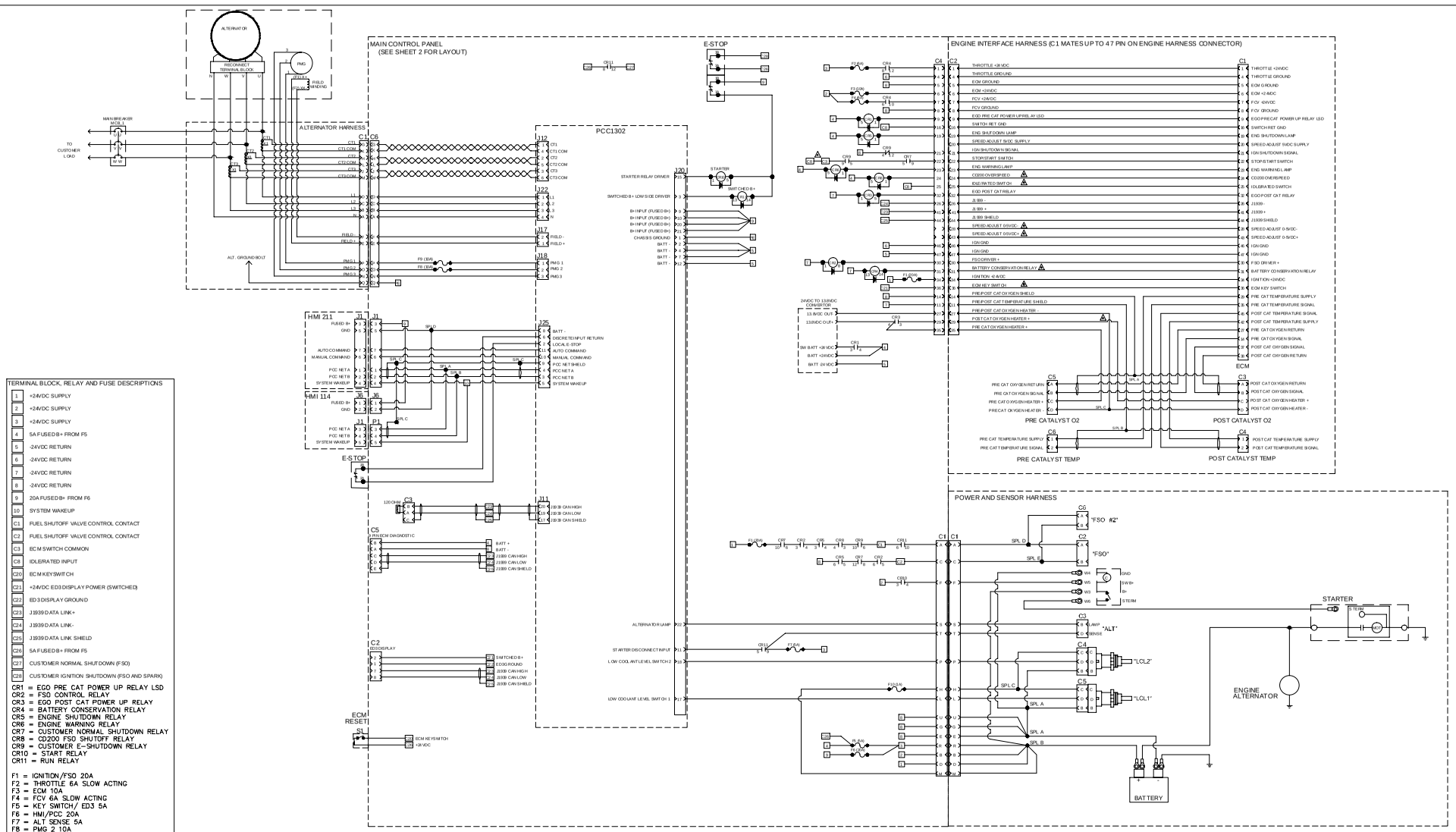

TERMINAL BLOCK, RELAY AND FUSE DESCRIPTIONS

1	+24VDC SUPPLY
2	+24VDC SUPPLY
3	+24VDC SUPPLY
4	5A FUSED B+ FROM F5
5	-24VDC RETURN
6	-24VDC RETURN
7	-24VDC RETURN
8	-24VDC RETURN
9	20A FUSED B+ FROM F6
10	SYSTEM WAKEUP
C1	FUEL SHUTOFF VALVE CONTROL CONTACT
C2	FUEL SHUTOFF VALVE CONTROL CONTACT
C3	ECM SWITCH COMMON
C8	IDLE/RATED INPUT
C20	ECM KEYSWITCH
C21	+24VDC ED3 DISPLAY POWER (SWITCHED)
C22	ED3 DISPLAY GROUND
C23	J1939 DATA LINK+
C24	J1939 DATA LINK-
C25	J1939 DATA LINK SHIELD
C26	5A FUSED B+ FROM F5
C27	CUSTOMER NORMAL SHUTDOWN (FSO)
C28	CUSTOMER IGNITION SHUTDOWN (FSO AND SPARK)

CR1 = EGO PRE CAT POWER UP RELAY LSD
CR2 = FSO CONTROL RELAY
CR3 = EGO POST CAT POWER UP RELAY
CR4 = BATTERY CONSERVATION RELAY
CR5 = ENGINE SHUTDOWN RELAY
CR6 = ENGINE WARNING RELAY
CR7 = CUSTOMER NORMAL SHUTDOWN RELAY
CR8 = CD200 FSO SHUTOFF RELAY
CR9 = CUSTOMER E-SHUTDOWN RELAY
CR10 = START RELAY
CR11 = RUN RELAY

F1 = IGNITION/FSO 20A
F2 = THROTTLE 6A SLOW ACTING
F3 = ECM 10A
F4 = FCV 6A SLOW ACTING
F5 = KEY SWITCH/ ED3 5A
F6 = HMI/PCC 20A
F7 = ALT SENSE 5A
F8 = PMG 2 10A
F9 = PMG 1 10A
F10 = LOW COOLANT LEVEL 1A

S1 = CONTROLLER RESET

LEGEND

= RELAY COIL

= RELAY CONTACT

= TERMINAL BLOCK

REFERENCE: 1) SEE CPG DRAWING #0630-3440 FOR PCC SCHEMATICS AND INTERFACE
2) SEE CUMMINS DRAWING #4021936-02 FOR ENGINE SIDE WIRING AND INTERFACE

This document contains confidential and trade secret information. It is the property of Cummins Power Generation and shall not be reproduced in whole or in part without prior written approval of Cummins Power Generation. It is furnished in confidence for the limited purpose of use by employees of Cummins Power Generation and its affiliated companies, and may not be provided or otherwise made available to any other person or entity without the prior written consent of Cummins Power Generation. Any reproduction of this document, in whole or in part, or the removal of this notice is prohibited. Violators may be prosecuted.

UNLESS OTHERWISE SPECIFIED ALL DIMENSION TOLERANCES ARE

ANGULAR DIMENSIONS ± 1°	DECIMAL UNITS	METRIC UNITS
THIRD ANGLE PROJECTION	.X ± 0.100	.X ± 2.50
	.XX ± 0.050	.XX ± 1.25
	.XXX ± 0.025	.XXX ± 0.635
	.XXXX ± 0.010	.XXXX ± 0.254

CUMMINS NPOWER LLC
1600 DIGITAL DRIVE
MILTON, WISCONSIN, USA
WWW.CUMMINSNPOWER.COM

CUSTOM DESIGN AND UPFIT GENSET
FOR CUMMINS DRIVE
DEPERE, WISCONSIN

SCHEMATIC, CONTROLS INTERFACE
GTA855E w/ PCC1302

DWG UNITS: INCH/LB/S	DRAWN BY: KAK	DATE: 2 SEPT 2011
SCALE:	AUTO CAD	INIT ECO:
EST WEIGHT:	SHEET 1OF3	DRAWING NO: GFBC-PCC1.3-WIRING

REV	ECO	DESCRIPTION OF REVISION	BY	DATE
B	2014-109	CORRECTED PINOUTS BETWEEN C1 & C2.	RMJ	25FEB2014
A	2013-721	ADDED JUMPER WIRE BETWEEN TERMINALS C3 & C8, REMOVED C7, FIXED O2 WIRING. ADDED SHEET 3.	KAK	25NOV2013

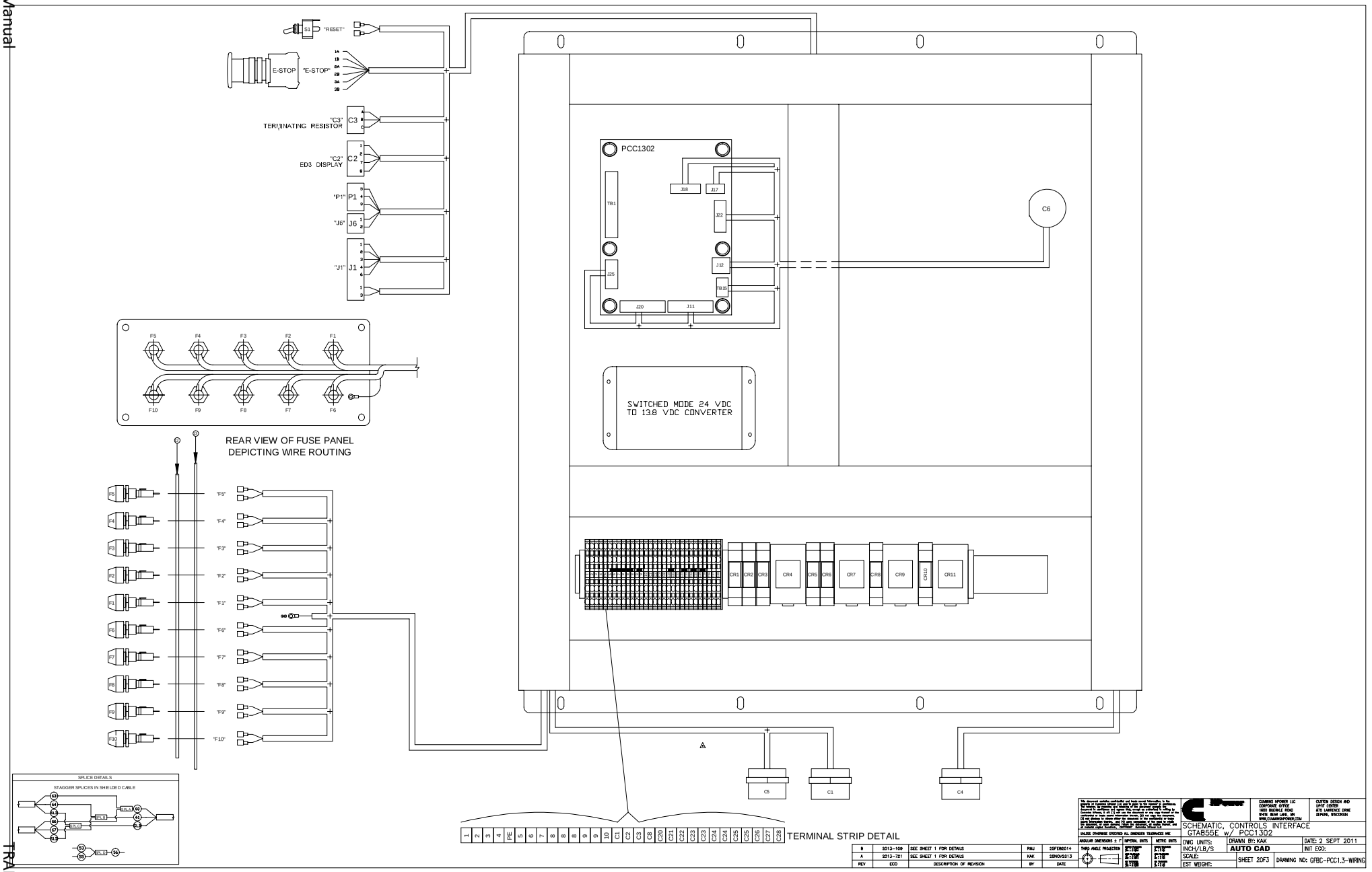
S1 "RESET"
E-STOP "E-STOP"
"C3" TERMINATING RESISTOR C3
"C2" ED3 DISPLAY C2
"P1" P1
"J6" J6
"J1" J1
PCC1302
J18
J17
TB1
J22
J12
J25
TB35
J20
J11
C6
SWITCHED MODE 24 VDC TO 13.8 VDC CONVERTER
CR1 CR2 CR3 CR4 CR5 CR6 CR7 CR8 CR9 CR10 CR11
F5 F4 F3 F2 F1
F10 F9 F8 F7 F6
REAR VIEW OF FUSE PANEL DEPICTING WIRE ROUTING
"F5" "F4" "F3" "F2" "F1" "F6" "F7" "F8" "F9" "F10"
C5
C1
C4
SPLICE DETAILS
STAGGER SPLICES IN SHIELDED CABLE
1 2 3 4 PE 5 6 7 8 8 8 9 9 10 C1 C2 C3 C8 C20 C21 C22 C23 C23 C24 C24 C25 C25 C26 C27 C28
TERMINAL STRIP DETAIL
B 2013-109 SEE SHEET 1 FOR DETAILS RMJ 25FEB2014
A 2013-721 SEE SHEET 1 FOR DETAILS KAK 25NOV2013
REV ECO DESCRIPTION OF REVISION BY DATE
CUMMINS NPOWER LLC CORPORATE OFFICE 1600 BUERKLE ROAD WHITE BEAR LAKE, MN WWW.CUMMINSPOWER.COM
CUSTOM DESIGN AND UPFIT CENTER 875 LAWRENCE DRIVE DE PERE, WISCONSIN
SCHEMATIC, CONTROLS INTERFACE GTA855E w/ PCC1302
DWG UNITS: INCH/LB/S
DRAWN BY: KAK
DATE: 2 SEPT 2011
AUTO CAD
INIT ECO:
SCALE:
SHEET 20F3
EST WEIGHT:
DRAWING NO: GFBC-PCC1.3-WIRING

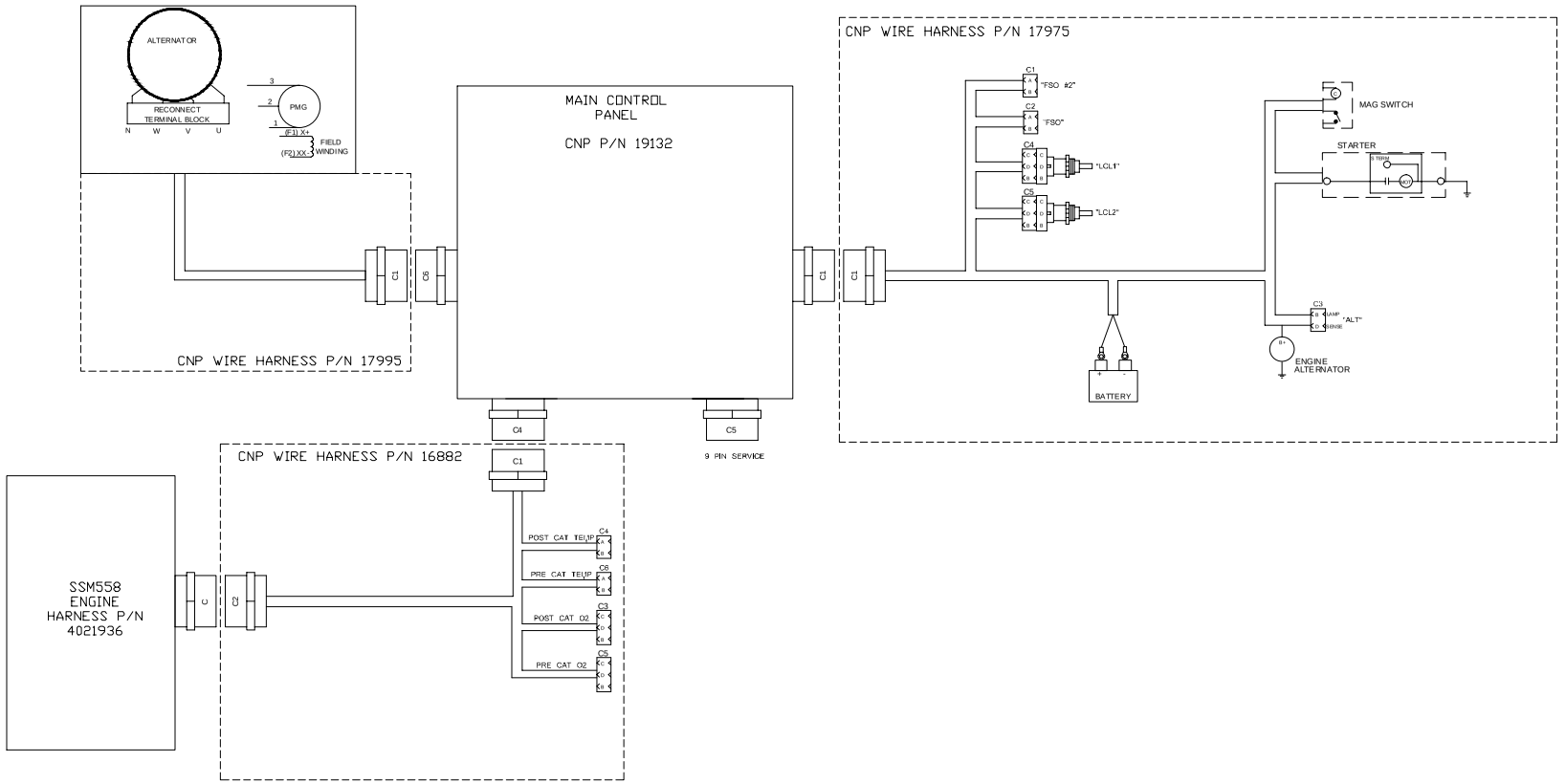

REV	ECO	DESCRIPTION OF REVISION	BY	DATE
B	2013-109	SEE SHEET 1 FOR DETAILS	RMJ	20FEB2014
A	2013-721	SEE SHEET 1 FOR DETAILS	KAK	25NOV2013

This drawing contains confidential and trade secret information. In the event of a public disclosure of information contained herein, Cummins Inc. will pursue all legal remedies available under law. The recipient of this drawing by its retention and use agrees to protect the information contained herein from unauthorized disclosure, use and dissemination and to return this drawing upon request or when no longer needed by recipient. Unless otherwise agreed to in writing by Cummins Inc., use of information contained herein for any purpose other than that for which it was disclosed is strictly prohibited. Cummins Inc. reserves all rights under law.

UNLESS OTHERWISE SPECIFIED ALL DIMENSION TOLERANCES ARE

ANGULAR DIMENSIONS ± 1°	MATERIAL LIMITS	METRIC LIMITS
THIRD ANGLE PROJECTION	.X ± 0.1	.X ± 2.5
	.XX ± 0.05	.XX ± 1.27
	.XXX ± 0.010	.XXX ± 0.254
	.XXXX ± 0.0050	.XXXX ± 0.1270

CUMMINS NPOWER LLC
CORPORATE OFFICE
1400 NICOLLET ROAD
WHITE BEAR LAKE, MN
WWW.CUMMINSNPOWER.COM

CUSTOM DESIGN AND LAYOUT CENTER
875 LAWRENCE DRIVE
DEPERE, WISCONSIN

SCHEMATIC, CONTROLS INTERFACE
GTA855E W/ PCC1302

DWG UNITS:	DRAWN BY: KAK	DATE: 02 SEPT 2011
INCH/LB/S	AUTO CAD	INIT ECO:
SCALE:	SHEET 3OF3	DRAWING NO: GFBC-PCC1.3-WIRING
EST WEIGHT:		

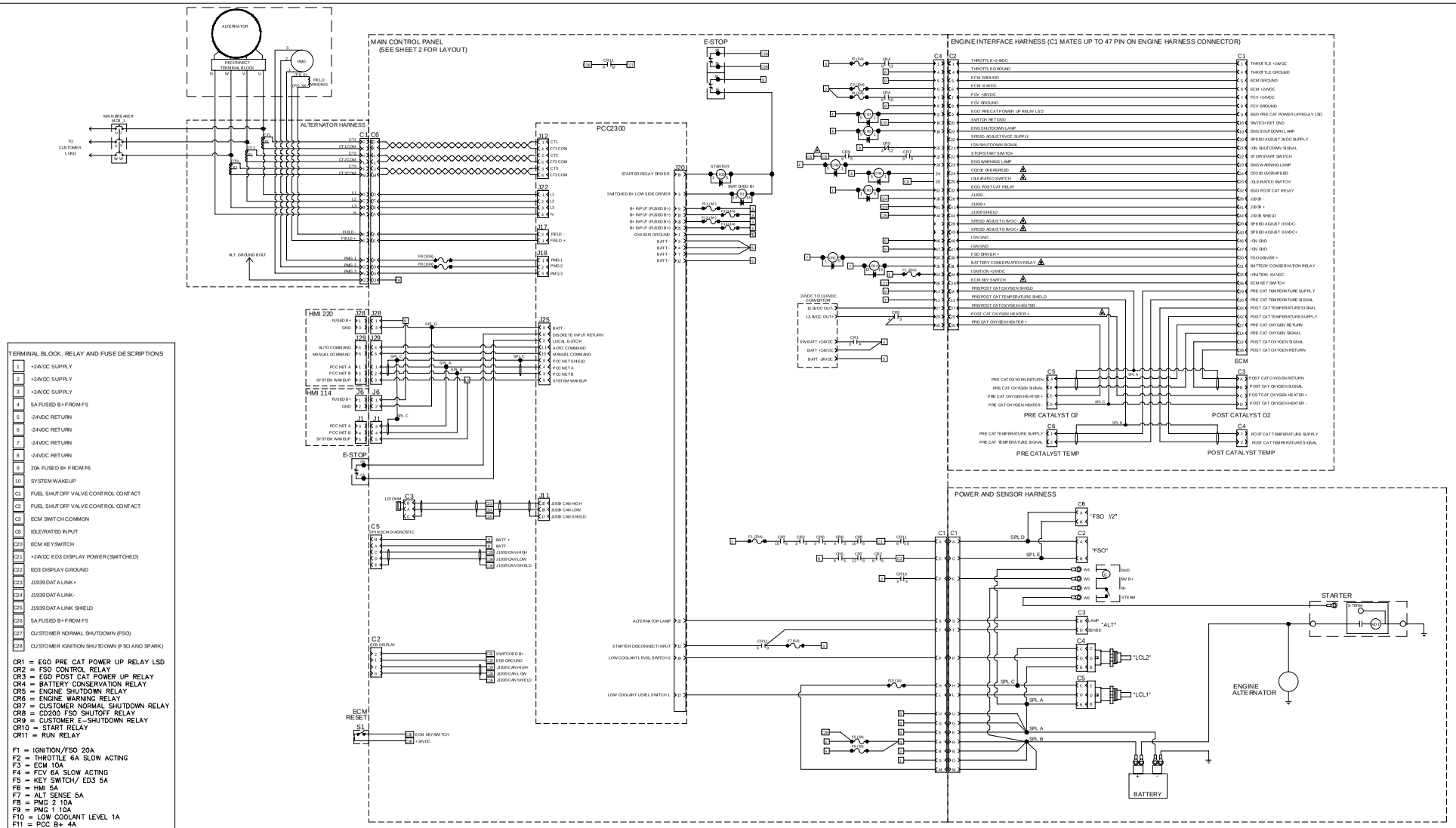

TERMINAL BLOCK, RELAY AND FUSE DESCRIPTIONS

1	+24VDC SUPPLY
2	+24VDC SUPPLY
3	+24VDC SUPPLY
4	5A FUSED B+ FROM F5
5	-24VDC RETURN
6	-24VDC RETURN
7	-24VDC RETURN
8	-24VDC RETURN
9	20A FUSED B+ FROM F6
10	SYSTEM WAKEUP
C1	FUEL SHUT OFF VALVE CONTROL CONTACT
C2	FUEL SHUT OFF VALVE CONTROL CONTACT
C3	ECM SWITCH COMMON
C8	IDLE/RATED INPUT
C20	ECM KEYSWITCH
C21	+24VDC ED3 DISPLAY POWER (SWITCHED)
C22	ED3 DISPLAY GROUND
C23	J1939 DATA LINK+
C24	J1939 DATA LINK-
C25	J1939 DATA LINK SHIELD
C26	5A FUSED B+ FROM F5
C27	CUSTOMER NORMAL SHUTDOWN (FSO)
C28	CUSTOMER IGNITION SHUTDOWN (FSO AND SPARK)

CR1 = EGO PRE CAT POWER UP RELAY
CR2 = FSO CONTROL RELAY
CR3 = EGO POST CAT POWER UP RELAY
CR4 = BATTERY CONSERVATION RELAY
CR5 = ENGINE SHUTDOWN RELAY
CR6 = ENGINE WARNING RELAY
CR7 = CUSTOMER NORMAL SHUTDOWN RELAY
CR8 = CD200 FSO SHUTOFF RELAY
CR9 = CUSTOMER E-SHUTDOWN RELAY
CR10 = START RELAY
CR11 = RUN RELAY

F1 = IGNITION/FSO 20A
F2 = THROTTLE 6A SLOW ACTING
F3 = ECM 10A
F4 = FCV 6A SLOW ACTING
F5 = KEY SWITCH/ ED3 5A
F6 = HMI 5A
F7 = ALT SENSE 5A
F8 = PMG 2 10A
F9 = PMG 1 10A
F10 = LOW COOLANT LEVEL 1A
F11 = PCC B+ 4A
F12 = PCC B+ 4A
F13 = PCC B+ 4A
F14 = PCC B+ 4A

S1 = CONTROLLER RESET

LEGEND

= RELAY COIL
= RELAY CONTACT
= TERMINAL BLOCK

REFERENCE: 1) SEE CPG DRAWING #0630-3440 FOR PCC SCHEMATICS AND INTERFACE
2) SEE CUMMINS DRAWING #4021936-02 FOR ENGINE SIDE WIRING AND INTERFACE

REV	ECO	DESCRIPTION OF REVISION	BY	DATE
B	2014-109	CORRECTED PINOUTS BETWEEN C1 & C2.	RNJ	25FEB2014
A	2013-721	REMOVED C7, FIXED O2 WIRING, ADDED SHEET 3, ADDED JUMPER BETWEEN TERMINALS C3 & C8.	KAK	26NOV2013

CUMMINS NPOWER LLC
CORPORATE OFFICE
1600 MARKLE ROAD
WHITE BEAR LAKE, MN
WWW.CUMMINSNPOWER.COM

CUSTOM DESIGN AND LIGHT CENTER
875 LAWRENCE DRIVE
DEPERE, WISCONSIN

UNLESS OTHERWISE SPECIFIED ALL DIMENSION TOLERANCES ARE:
ANGULAR DIMENSIONS ± 1°

SCHEMATIC, CONTROLS INTERFACE
GTA855E w/ PCC2300

DWG UNITS:	DRAWN BY: KAK
INCH/LB/S	AUTO CAD
SCALE:	INIT. ECO:
EST WEIGHT:	DATE: 23 AUG 2011
SHEET 1OF3	DRAWING NO: GFBC-PCC2.3-WIRING

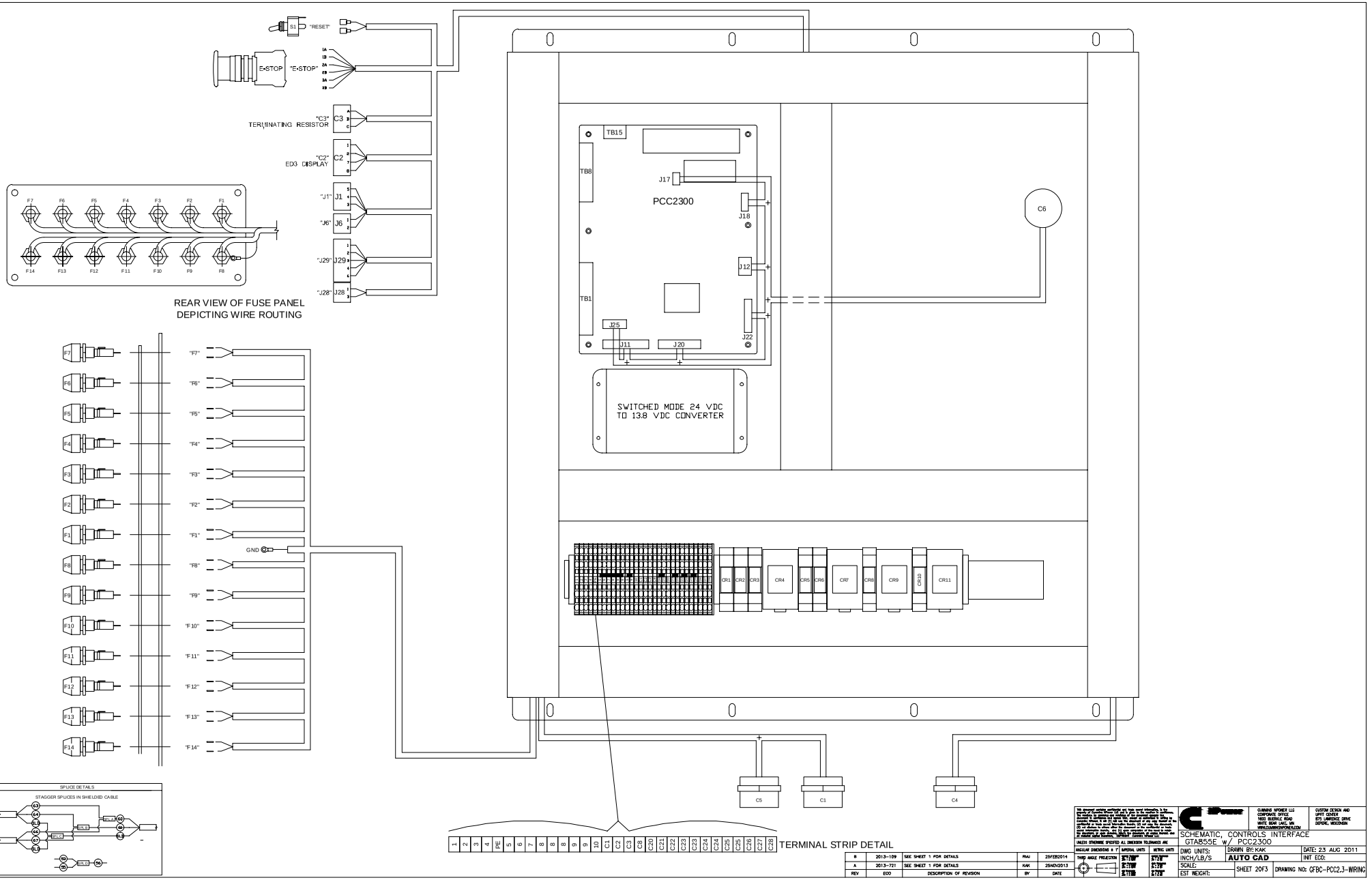

REV	ECO	DESCRIPTION OF REVISION	BY	DATE
B	2013-109	SEE SHEET 1 FOR DETAILS	RMJ	20FEB2014
A	2013-721	SEE SHEET 1 FOR DETAILS	KAK	25NOV2013

CUMMINS NPOWER LLC
CORPORATE OFFICE
1600 BUERKLE ROAD
WHITE BEAR LAKE, MN
WWW.CUMMINSNPOWER.COM

CUSTOM DESIGN AND UNIT CENTER
875 LAWRENCE DRIVE
DEPERE, WISCONSIN

SCHEMATIC, CONTROLS INTERFACE
GTA855E w/ PCC2300

DWG UNITS: INCH/LB/S
DRAWN BY: KAK
AUTO CAD
DATE: 23 AUG 2011
INIT ECO:
SCALE:
EST WEIGHT:
SHEET 2OF3
DRAWING NO: GFBC-PCC2.3-WIRING

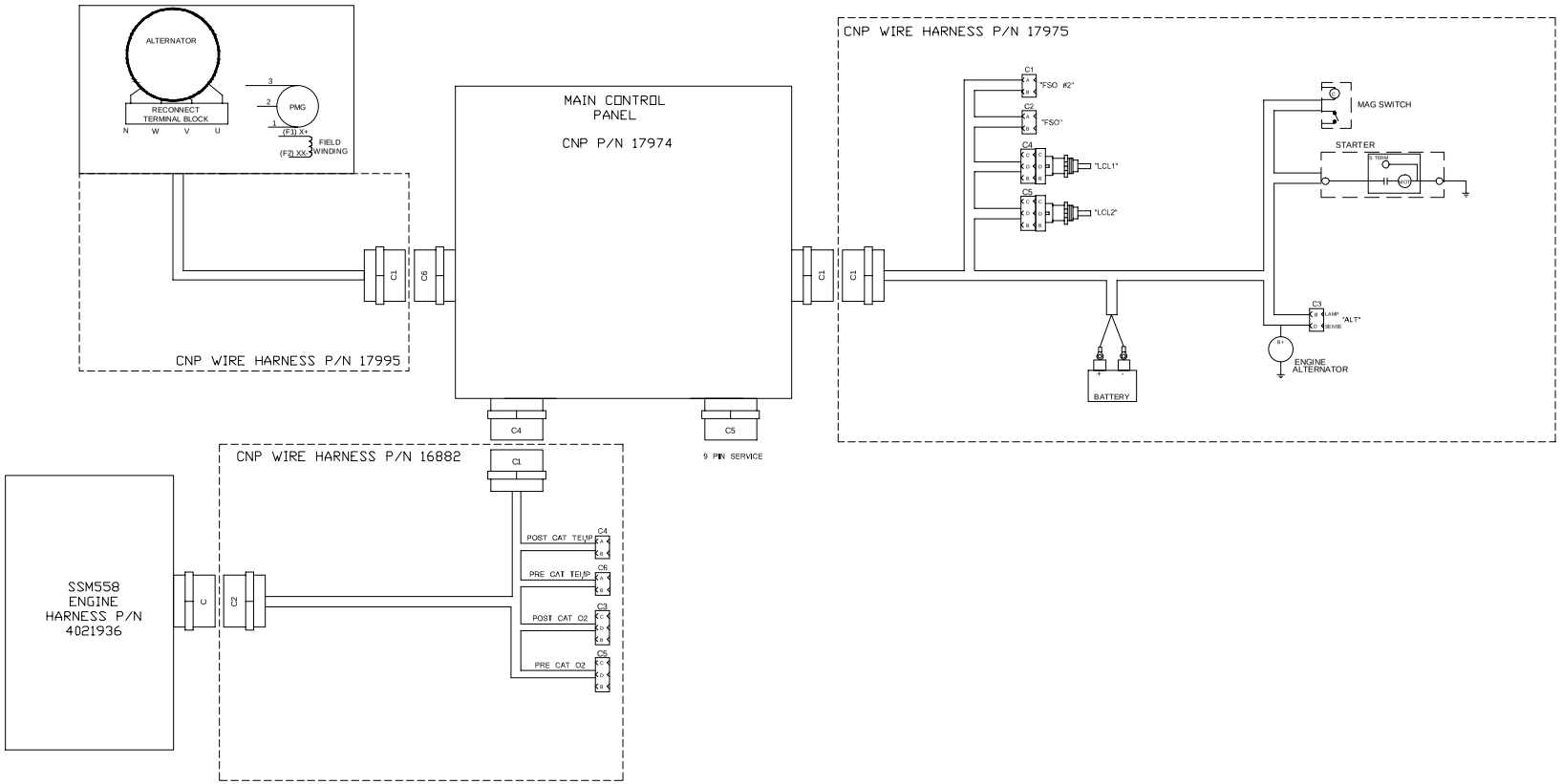

REV	ECO	DESCRIPTION OF REVISION	BY	DATE
B	2013-109	SEE SHEET 1 FOR DETAILS	RMJ	28FEB2014
A	2013-721	SEE SHEET 1 FOR DETAILS	KAK	25NOV2013

UNLESS OTHERWISE SPECIFIED ALL DIMENSION TOLERANCES ARE
ANGULAR DIMENSIONS ± 1°
THIRD ANGLE PROJECTION
IMPERIAL UNITS
METRIC UNITS

CUMMINS IMPORTER LLC
CORPORATE OFFICE
1600 SLEEPIKE ROAD
WHITE BEAR LAKE, MN
WWW.CUMMINSPOWER.COM

CUSTOM DESIGN AND UNIT CENTER
875 LAWRENCE DRIVE
DEPERE, WISCONSIN

SCHEMATIC, CONTROLS INTERFACE
GTA855E W/ PCC2300

DWG UNITS: INCH/LB/S
DRAWN BY: KAK
DATE: 23 AUG 2011
INIT ECO:
AUTO CAD
SCALE:
EST WEIGHT:
SHEET 3OF3
DRAWING NO: GFBC-PCC2.3-WIRING

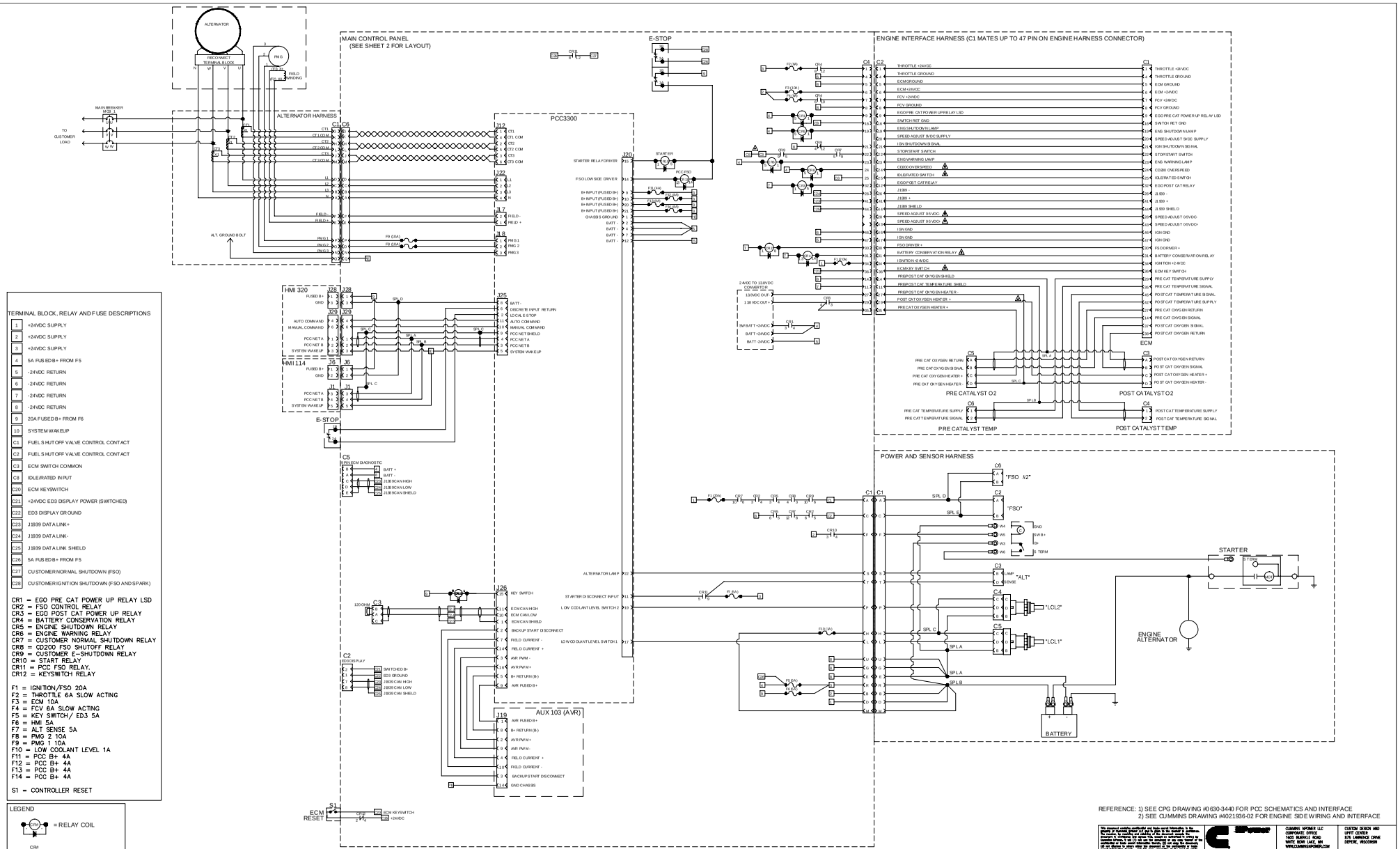

TERMINAL BLOCK, RELAY AND FUSE DESCRIPTIONS

1	+24VDC SUPPLY
2	+24VDC SUPPLY
3	+24VDC SUPPLY
4	5A FUSED B+ FROM F5
5	-24VDC RETURN
6	-24VDC RETURN
7	-24VDC RETURN
8	-24VDC RETURN
9	20A FUSED B+ FROM F6
10	SYSTEM WAKEUP
C1	FUEL SHUTOFF VALVE CONTROL CONTACT
C2	FUEL SHUTOFF VALVE CONTROL CONTACT
C3	ECM SWITCH COMMON
C8	IDLE/RATED INPUT
C20	ECM KEYSWITCH
C21	+24VDC ED3 DISPLAY POWER (SWITCHED)
C22	ED3 DISPLAY GROUND
C23	J1939 DATA LINK+
C24	J1939 DATA LINK-
C25	J1939 DATA LINK SHIELD
C26	5A FUSED B+ FROM F5
C27	CUSTOMER NORMAL SHUTDOWN (FSO)
C28	CUSTOMER IGNITION SHUTDOWN (FSO AND SPARK)

CR1 = EGO PRE CAT POWER UP RELAY LSD
CR2 = FSO CONTROL RELAY
CR3 = EGO POST CAT POWER UP RELAY
CR4 = BATTERY CONSERVATION RELAY
CR5 = ENGINE SHUTDOWN RELAY
CR6 = ENGINE WARNING RELAY
CR7 = CUSTOMER NORMAL SHUTDOWN RELAY
CR8 = CD200 FSO SHUTOFF RELAY
CR9 = CUSTOMER E-SHUTDOWN RELAY
CR10 = START RELAY
CR11 = PCC FSO RELAY.
CR12 = KEYSWITCH RELAY

F1 = IGNITION/FSO 20A
F2 = THROTTLE 6A SLOW ACTING
F3 = ECM 10A
F4 = FCV 6A SLOW ACTING
F5 = KEY SWITCH/ ED3 5A
F6 = HMI 5A
F7 = ALT SENSE 5A
F8 = PMG 2 10A
F9 = PMG 1 10A
F10 = LOW COOLANT LEVEL 1A
F11 = PCC B+ 4A
F12 = PCC B+ 4A
F13 = PCC B+ 4A
F14 = PCC B+ 4A

S1 = CONTROLLER RESET

LEGEND

= RELAY COIL
= RELAY CONTACT
= TERMINAL BLOCK

REFERENCE: 1) SEE CPG DRAWING #0630-3440 FOR PCC SCHEMATICS AND INTERFACE
2) SEE CUMMINS DRAWING #4021936-02 FOR ENGINE SIDE WIRING AND INTERFACE

This document contains confidential and trade secret information. In the event of inadvertent release of it, please return it to Cummins Power Generation or destroy it and notify the sender immediately. Dissemination, distribution, or unauthorized use of this document or any information contained herein is prohibited. Cummins Power Generation makes no warranties, expressed or implied, except as may be stated in a written agreement with and for its customer. In no event is Cummins Power Generation liable for incidental or consequential damages in connection with or arising from the use of this document or any information contained herein. Copyright, Cummins Power Generation, 2011. All rights reserved. Cummins Power Generation and Cummins are trademarks of Cummins Power Generation.

CUMMINS NPOWER LLC
CORPORATE OFFICE
1600 BUERKLE ROAD
WHITE BEAR LAKE, MN
WWW.CUMMINSNPOWER.COM

CUSTOM DESIGN AND UPFIT CENTER
875 LAWRENCE DRIVE
DEPERE, WISCONSIN

SCHEMATIC, CONTROLS INTERFACE
GTA855E w/ PCC3300

DWG UNITS:	INCH/LB/S
SCALE:	
EST WEIGHT:	
DRAWN BY: KAK	DATE: 23 AUG 2011
AUTO CAD	INT. ECO:
SHEET 1OF3	DRAWING NO: GFBC-PCC3.3-WIRING

UNLESS OTHERWISE SPECIFIED ALL DIMENSION TOLERANCES ARE:
ANGULAR DIMENSIONS ± 0°
MATERIAL UNITS
METRIC UNITS
THIRD ANGLE PROJECTION

REV	ECO	DESCRIPTION OF REVISION	BY	DATE
B	2014-109	CORRECTED PINOUTS BETWEEN C1 & C2.	RMJ	25/FEB/2014
A	2013-721	ADDED JUMPER BETWEEN TERMINALS C3 & C8, FIXED C3 WIRING, ADDED SHEET 3.	KAK	25/NOV/2013

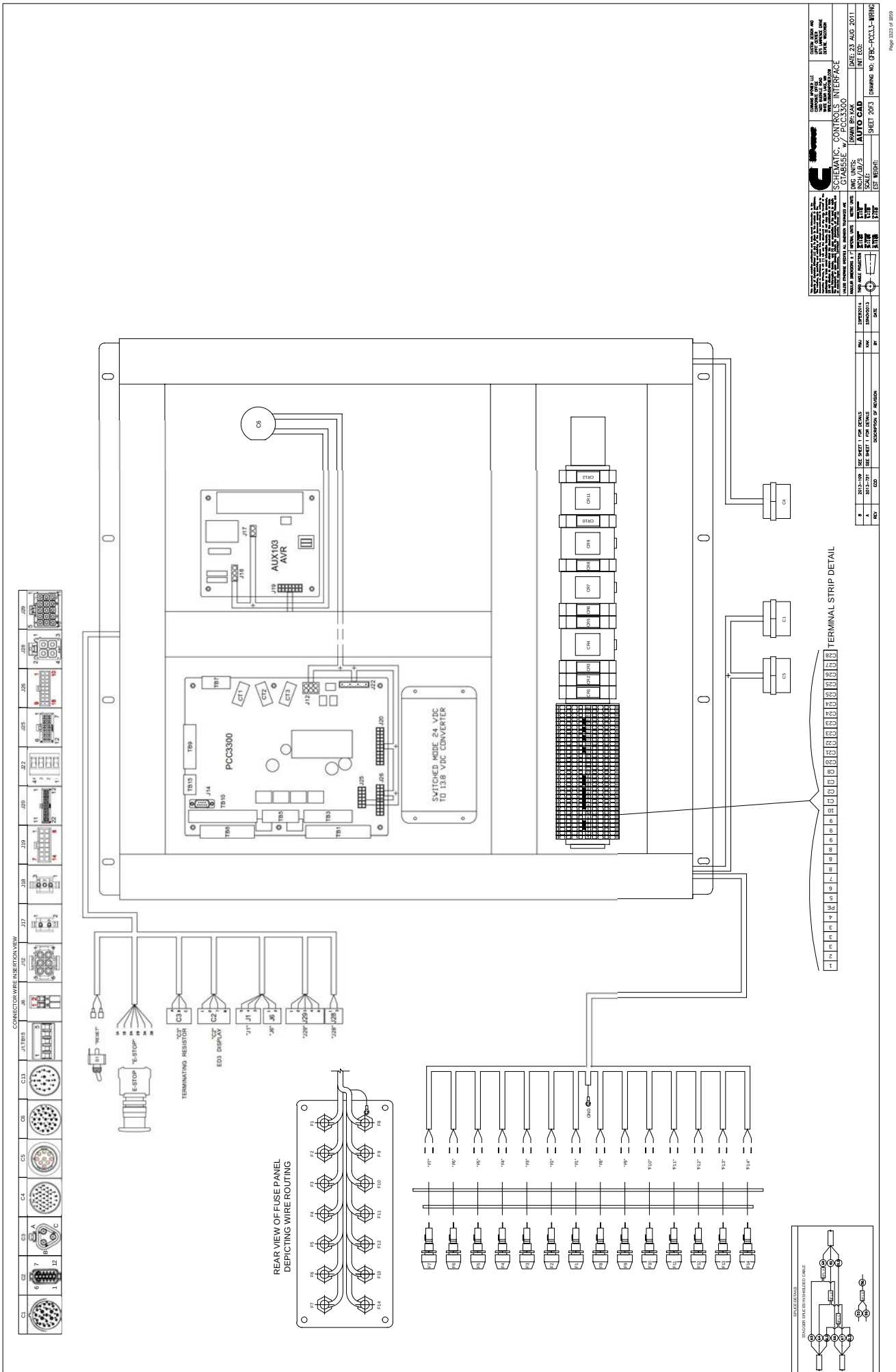

SCHEMATIC, CONTROLS INTERFACE
GTA855E w/ PCC3300
DWG UNITS: INCH/LB/S
DRAWN BY: KAK
AUTO CAD
DATE: 23 AUG 2011
SCALE:
SHEET 2 OF 3
DRAWING NO: GFBC-PCC3.3-WIRING
EST WEIGHT:
Page 3323 of 3859
AUX103 AVR
PCC3300
SWITCHED MODE 24 VDC TO 13.8 VDC CONVERTER
TERMINAL STRIP DETAIL
CONNECTOR WIRE INSERTION VIEW
REAR VIEW OF FUSE PANEL DEPICTING WIRE ROUTING
TERMINATING RESISTOR
ED3 DISPLAY
E-STOP
"RESET"
"E-STOP"
"C3"
"C2"
"J1"
"J6"
"J29"
"J28"
GND

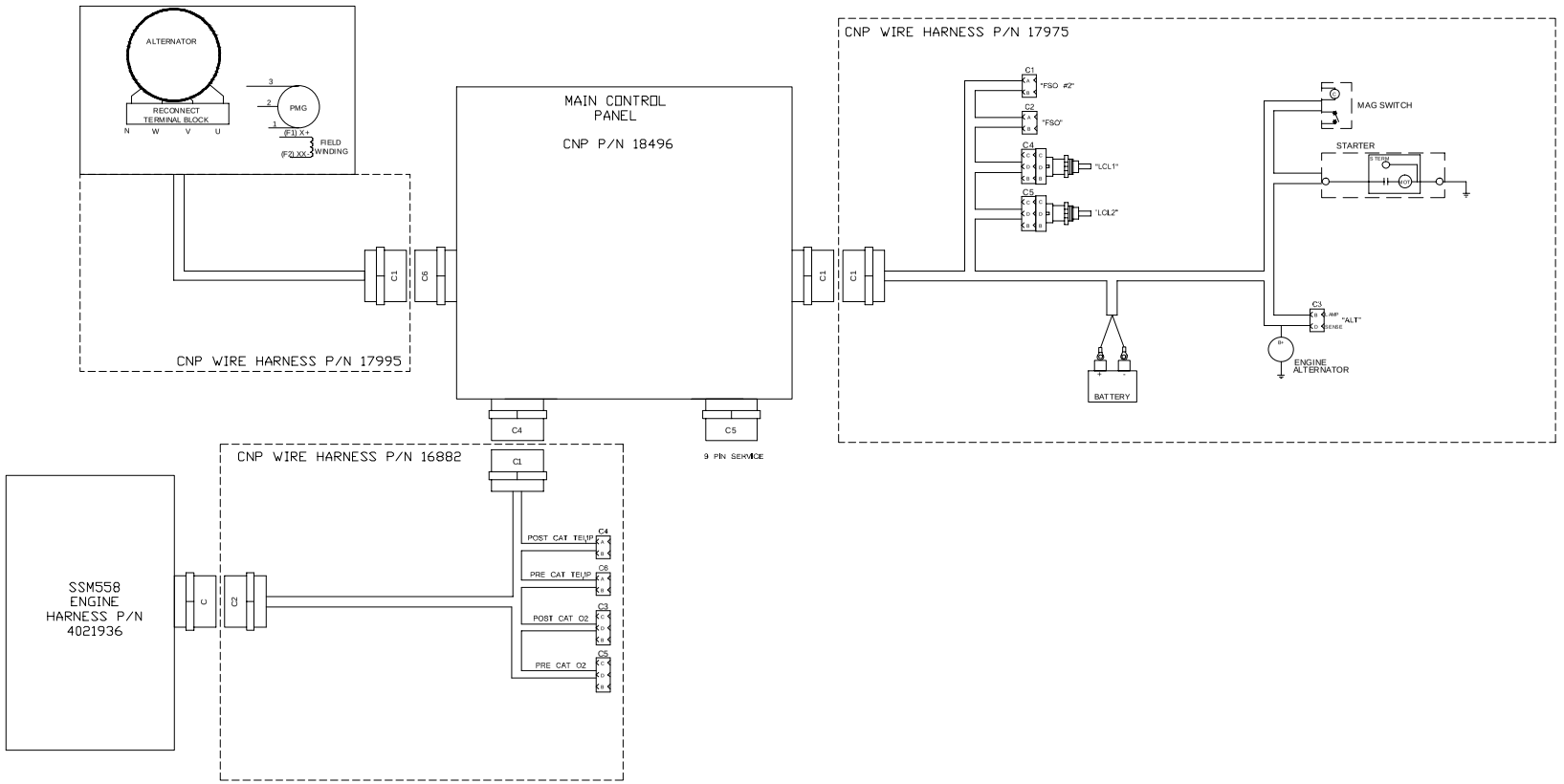

REV	ECO	DESCRIPTION OF REVISION	BY	DATE
B	2013-109	SEE SHEET 1 FOR DETAILS	RMJ	25FEB2014
A	2013-721	SEE SHEET 1 FOR DETAILS	KAK	25NOV2013

This document contains confidential and trade secret information. It is the property of Cummins Power LLC and is not to be copied or disclosed to others without the prior written consent of Cummins Power LLC. Any use or disclosure in whole or in part without such consent is prohibited and may be unlawful. By receiving this document, the recipient agrees to these restrictions and to maintain the information contained herein in confidence. Unless otherwise agreed to in writing, Cummins Power LLC reserves all patent, property, boilerplate and other rights in this document and in the information contained herein. Cummins Power LLC is not obligated to sell any product, make any delivery or otherwise perform any duty with respect to any of the contents of this document. Cummins Power LLC expressly disclaims any representation that the contents do not infringe the intellectual property rights of others. Cummins Power LLC reserves the right to change the contents of this document without prior notice. The recipient is responsible for the application or use of the contents of this document. Cummins Power LLC shall not be liable for any damages resulting from such application or use. The terms and conditions governing the sale of Cummins Power LLC products are contained in the Cummins Power LLC standard terms and conditions of sale. COPYRIGHT Cummins Power LLC

UNLESS OTHERWISE SPECIFIED ALL DIMENSION TOLERANCES ARE

ANGULAR DIMENSIONS ± 1°	IMPERIAL UNITS	METRIC UNITS
THIRD ANGLE PROJECTION	X.X ±0.030 in X.XX ±0.010 in X.XXX ±0.005 in	X.X ±0.76 mm X.XX ±0.25 mm X.XXX ±0.13 mm

CUMMINS NPOWER LLC
CORPORATE OFFICE
1600 OLETHLE ROAD
MAIL: BEAR LAKE, MN
MAIL@MINNPOWER.COM

CUSTOM DESIGN AND UNIT CENTER
875 LAWRENCE DRIVE
DEPERE, WISCONSIN

SCHEMATIC, CONTROLS INTERFACE
GTA855E W/ PCC3300

DWG UNITS:	INCH/LB/S	DRAWN BY: KAK	DATE: 23 AUG 2011
	AUTO CAD		INIT ECO:
SCALE:		SHEET 3OF3	DRAWING NO: GFBC-PCC3.3-WIRING
EST WEIGHT:			

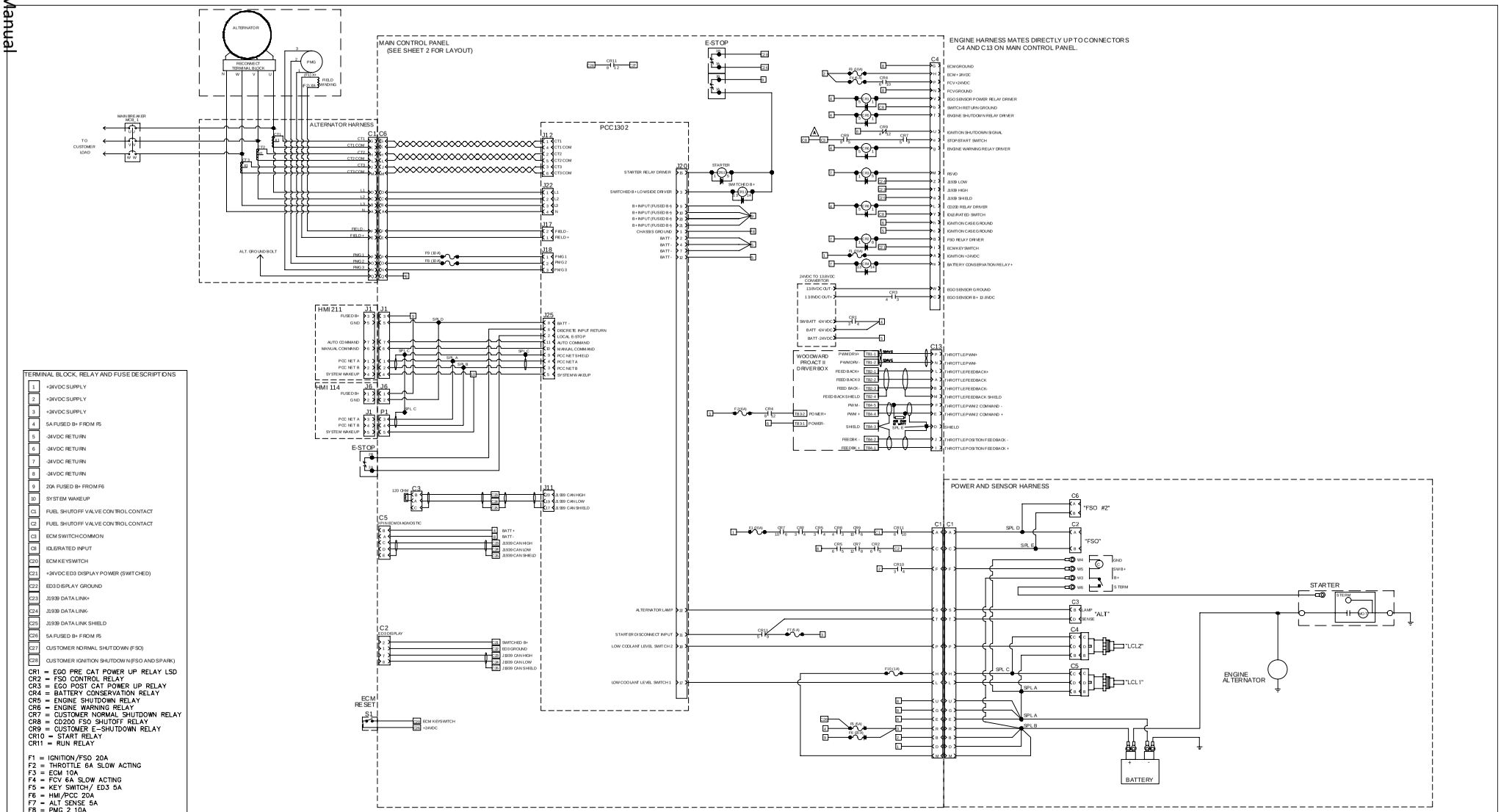

TERMINAL BLOCK, RELAY AND FUSE DESCRIPTIONS

1	+24VDC SUPPLY
2	+24VDC SUPPLY
3	+24VDC SUPPLY
4	5A FUSED B+ FROM F5
5	-24VDC RETURN
6	-24VDC RETURN
7	-24VDC RETURN
8	-24VDC RETURN
9	20A FUSED B+ FROM F6
10	SYSTEM WAKEUP
C1	FUEL SHUTOFF VALVE CONTROL CONTACT
C2	FUEL SHUTOFF VALVE CONTROL CONTACT
C3	ECM SWITCH COMMON
C8	IDLE/RATED INPUT
C20	ECM KEYSWITCH
C21	+24VDC ED3 DISPLAY POWER (SWITCHED)
C22	ED3 DISPLAY GROUND
C23	J1939 DATA LINK+
C24	J1939 DATA LINK-
C25	J1939 DATA LINK SHIELD
C26	5A FUSED B+ FROM F5
C27	CUSTOMER NORMAL SHUTDOWN (FSO)
C28	CUSTOMER IGNITION SHUTDOWN (FSO AND SPARK)

CR1 = EGO PRE CAT POWER UP RELAY LSD
CR2 = FSO CONTROL RELAY
CR3 = EGO POST CAT POWER UP RELAY
CR4 = BATTERY CONSERVATION RELAY
CR5 = ENGINE SHUTDOWN RELAY
CR6 = ENGINE WARNING RELAY
CR7 = CUSTOMER NORMAL SHUTDOWN RELAY
CR8 = CD200 FSO SHUTOFF RELAY
CR9 = CUSTOMER E-SHUTDOWN RELAY
CR10 = START RELAY
CR11 = RUN RELAY

F1 = IGNITION/FSO 20A
F2 = THROTTLE 6A SLOW ACTING
F3 = ECM 10A
F4 = FCV 6A SLOW ACTING
F5 = KEY SWITCH/ ED3 5A
F6 = HMI/PCC 20A
F7 = ALT SENSE 5A
F8 = PMG 1 10A
F9 = PMG 1 10A
F10 = LOW COOLANT LEVEL 1A

S1 = CONTROLLER RESET

LEGEND

= RELAY COIL
= RELAY CONTACT
= TERMINAL BLOCK

REFERENCE: 1) SEE CPG DRAWING #0630-3440 FOR PCC SCHEMATICS AND INTERFACE
2) SEE CUMMINS DRAWING #4021667-01 FOR ENGINE SIDE WIRING AND INTERFACE

REV	ECO	DESCRIPTION OF REVISION	BY	DATE
A	2013-721	ADDED JUMPER BETWEEN TERMINALS C3 & C8. REMOVED C7, ADDED SHEET 3.	KAK	25NOV2013

This document contains confidential and trade secret information. By the acceptance of this document, you agree that it will not be disclosed, distributed, reproduced or used for any purpose other than as authorized in writing by Cummins Power Generation. Any unauthorized use, disclosure, distribution or reproduction is prohibited and may be unlawful. US and foreign patents may exist, and may be pending, on the products described in this document. No intellectual property rights are granted by this document or by any sale of products described herein. You should not assume that Cummins Power Generation has authorized any reproduction of proprietary rights described in this document unless you have received the document directly from Cummins Power Generation. COPYRIGHT Cummins Power LLC

UNLESS OTHERWISE SPECIFIED ALL DIMENSION TOLERANCES ARE

ANGULAR DIMENSIONS ± 1°	IMPERIAL UNITS	METRIC UNITS
THIRD ANGLE PROJECTION	X.X ± 0.100	X.X ± 2.54
	X.XX ± 0.050	X.XX ± 1.27
	X.XXX ± 0.025	X.XXX ± 0.635

CUMMINS NPOWER LLC
CORPORATE OFFICE
1600 EISENHOWER ROAD
WHITE BEAR LAKE, MN
WWW.CUMMINSNPOWER.COM

CUSTOM DESIGN AND UNIT CENTER
875 LAWRENCE DRIVE
DEPERE, WISCONSIN

SCHEMATIC, CONTROLS INTERFACE
KTA19SLB w/ PCC1302

DWG UNITS: INCH/LB/S
DRAWN BY: KAK
DATE: 2 SEPT 2011
AUTO CAD
INIT ECO:
SCALE:
EST WEIGHT:
SHEET 1OF3
DRAWING NO: CFEB-PCC1.3-WIRING

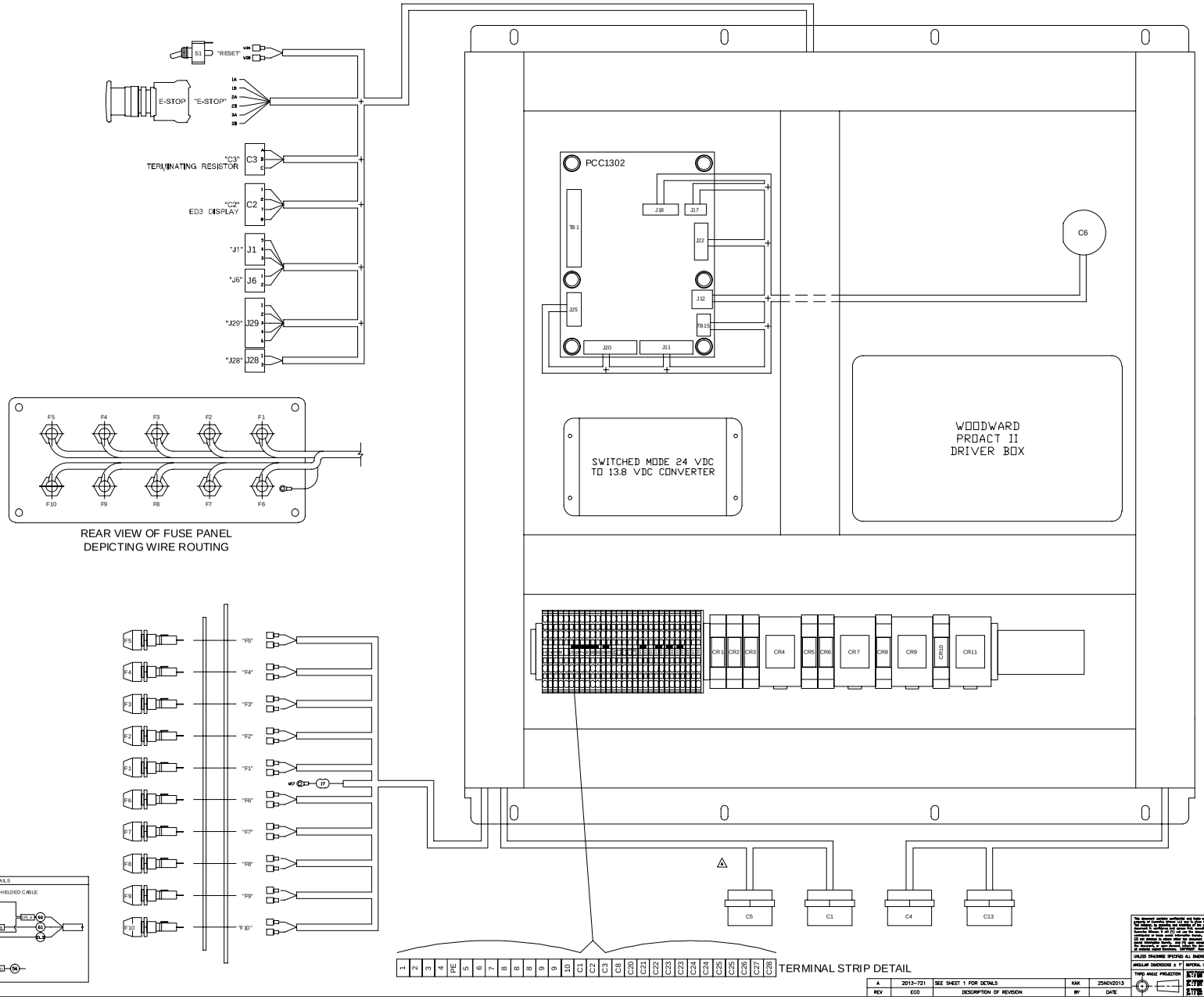

REV	ECO	DESCRIPTION OF REVISION	BY	DATE
A	2013-721	SEE SHEET 1 FOR DETAILS	KAK	25NOV2013

CUMMINS NPOWER LLC
CORPORATE OFFICE
1600 DIGITAL DRIVE
WHITE BEAR LAKE, MN
WWW.CUMMINSNPOWER.COM

CUSTOM DESIGN AND UNIT CENTER
875 LAWRENCE DRIVE
DEPERE, WISCONSIN

SCHEMATIC, CONTROLS INTERFACE KTA19SLB w/ PCC1302

DWG UNITS: INCH/LB/S
SCALE:
EST WEIGHT:
DRAWN BY: KAK
AUTO CAD
SHEET 20F3
DATE: 2 SEPT 2011
INIT ECO:
DRAWING NO: CFEB-PCC1.3-WIRING

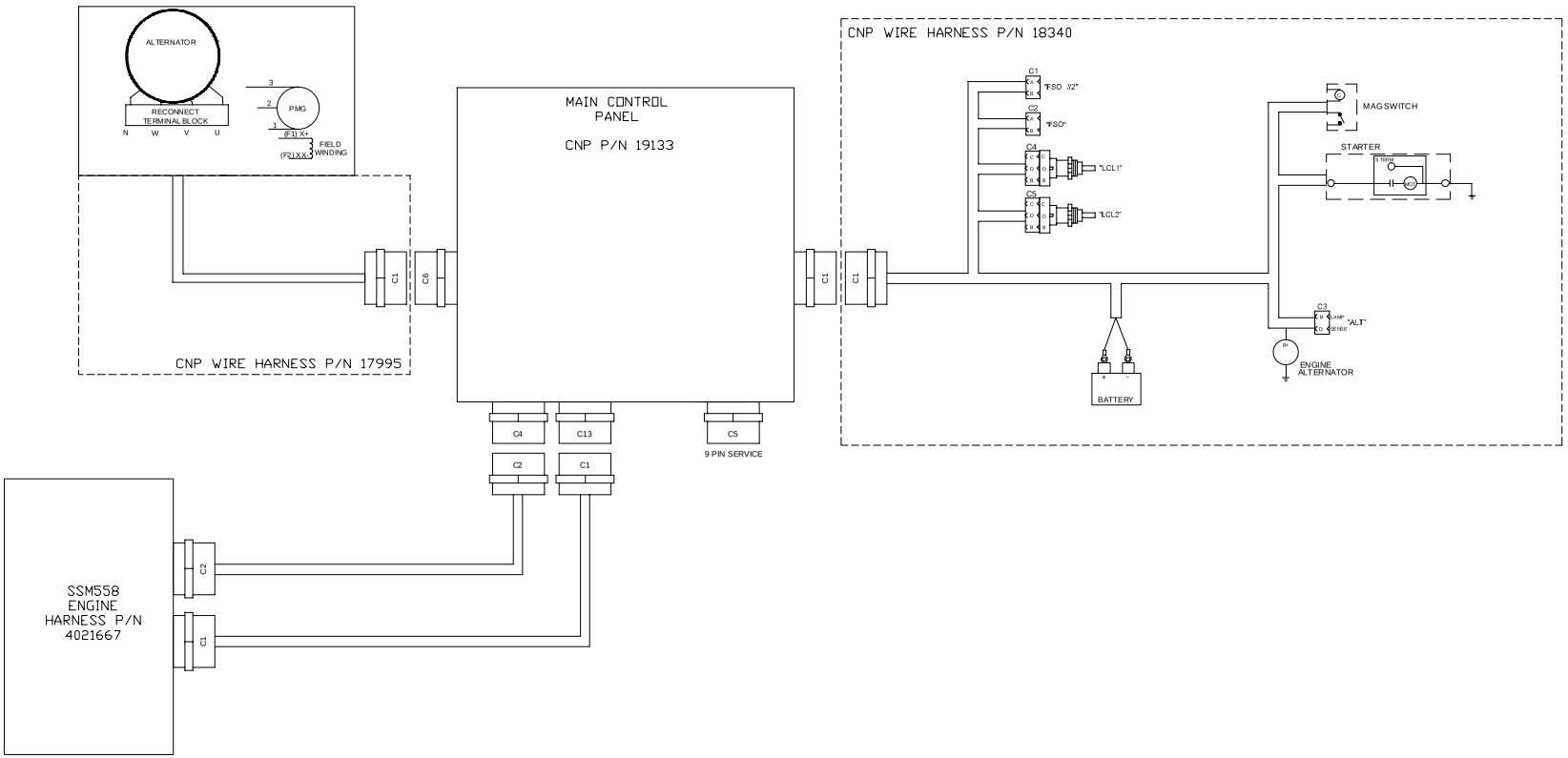

REV	ECO	DESCRIPTION OF REVISION	BY	DATE
A	2013-721	SEE SHEET 1 FOR DETAILS	KAK	25NOV2013

This document contains confidential and trade secret information. By the acceptance of this document, the recipient agrees that neither this document nor the information disclosed herein nor any part thereof shall be reproduced or transferred to other documents or used or disclosed to others for manufacturing or any other purpose except as specifically authorized in writing by Cummins Inc. and that it will not be used in any way detrimental to any interest of Cummins Inc. All rights reserved. Cummins Inc. is an Equal Opportunity Employer. COPYRIGHT Cummins Inc.

UNLESS OTHERWISE SPECIFIED ALL TOLERANCES ARE

ANGULAR DIMENSIONS ± | IMPERIAL UNITS | METRIC UNITS

THIRD ANGLE PROJECTION

CUMMINS NPOWER LLC
CORPORATE OFFICE
1600 BUSINESS ROAD
WHITE BEAR LAKE, MN
WWW.CUMMINSNPOWER.COM

CUSTOM DESIGN AND UNIT CENTER
825 LAWRENCE DRIVE
DEPERE, WISCONSIN

SCHEMATIC, CONTROLS INTERFACE
KTA19SLB W/ PCC1302

DWG UNITS: INCH/LB/S
AUTO CAD
DRAWN BY: KAK
DATE: 02 SEPT 2011
INIT ECO:
SCALE:
EST WEIGHT:
SHEET 30F3
DRAWING NO: CFEB-PCC1.3-WIRING

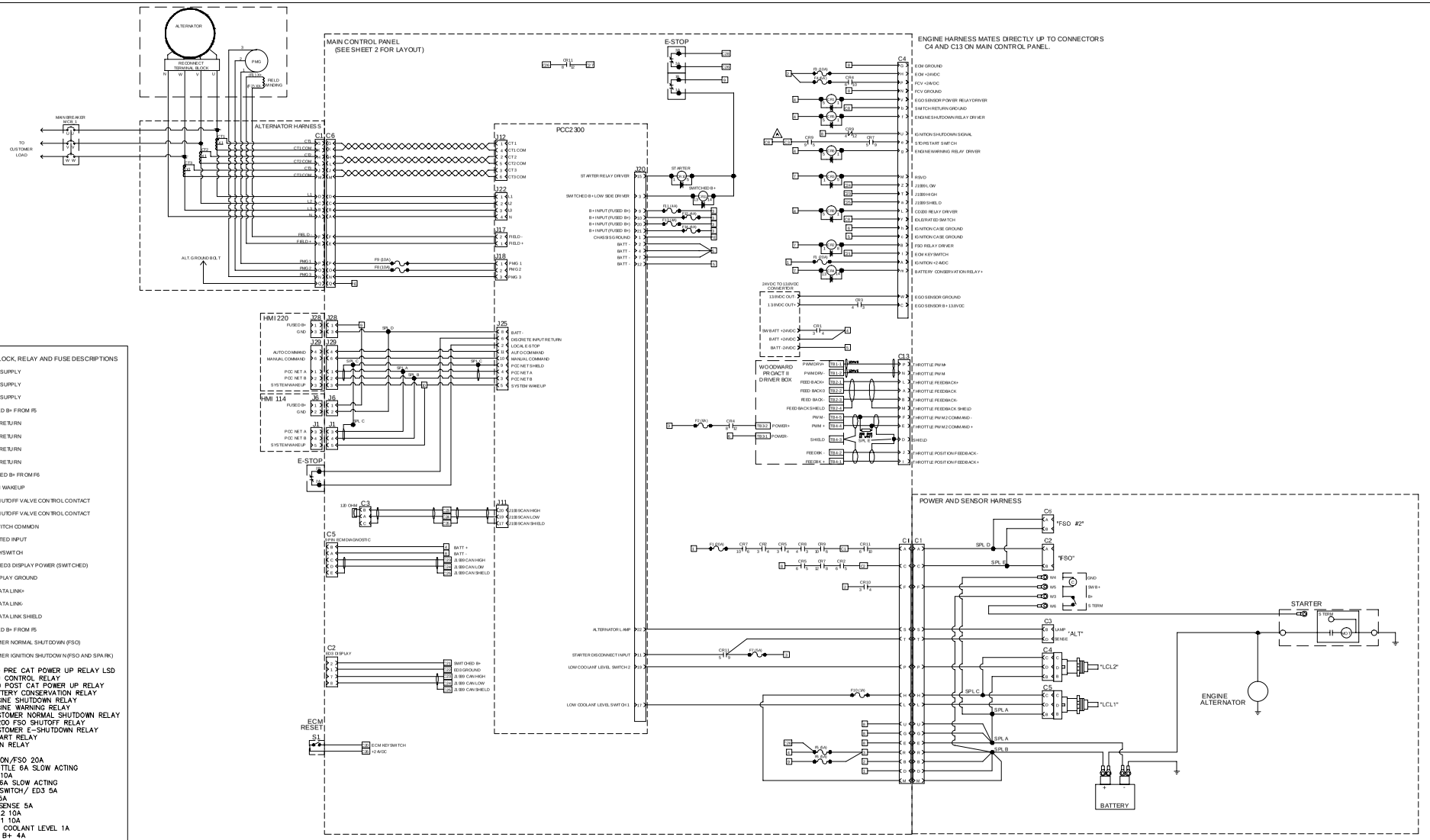

TERMINAL BLOCK, RELAY AND FUSE DESCRIPTIONS

1	+24VDC SUPPLY
2	+24VDC SUPPLY
3	+24VDC SUPPLY
4	5A FUSED B+ FROM F5
5	-24VDC RETURN
6	-24VDC RETURN
7	-24VDC RETURN
8	-24VDC RETURN
9	20A FUSED B+ FROM F6
10	SYSTEM WAKEUP
C1	FUEL SHUTOFF VALVE CONTROL CONTACT
C2	FUEL SHUTOFF VALVE CONTROL CONTACT
C3	ECM SWITCH COMMON
C8	IDLE/RATED INPUT
C20	ECM KEYSWITCH
C21	+24VDC ED3 DISPLAY POWER (SWITCHED)
C22	ED3 DISPLAY GROUND
C23	J1939 DATA LINK+
C24	J1939 DATA LINK-
C25	J1939 DATA LINK SHIELD
C26	5A FUSED B+ FROM F5
C27	CUSTOMER NORMAL SHUTDOWN (FSO)
C28	CUSTOMER IGNITION SHUTDOWN (FSO AND SPARK)

CR1 = EGO PRE CAT POWER UP RELAY LSD
CR2 = FSO CONTROL RELAY
CR3 = EGO POST CAT POWER UP RELAY
CR4 = BATTERY CONSERVATION RELAY
CR5 = ENGINE SHUTDOWN RELAY
CR6 = ENGINE WARNING RELAY
CR7 = CUSTOMER NORMAL SHUTDOWN RELAY
CR8 = CD200 FSO SHUTOFF RELAY
CR9 = CUSTOMER E-SHUTDOWN RELAY
CR10 = START RELAY
CR11 = RUN RELAY

F1 = IGNITION/FSO 20A
F2 = THROTTLE 6A SLOW ACTING
F3 = ECM 10A
F4 = FCV 6A SLOW ACTING
F5 = KEY SWITCH/ ED3 5A
F6 = HMI 5A
F7 = ALT SENSE 5A
F8 = PMG 2 10A
F9 = PMG 1 10A
F10 = LOW COOLANT LEVEL 1A
F11 = PCC B+ 4A
F12 = PCC B+ 4A
F13 = PCC B+ 4A
F14 = PCC B+ 4A

S1 = CONTROLLER RESET

LEGEND

= RELAY COIL
= RELAY CONTACT
= TERMINAL BLOCK

REFERENCE: 1) SEE CPG DRAWING #0630-3440 FOR PCC SCHEMATICS AND INTERFACE
2) SEE CUMMINS DRAWING #4021667-01 FOR ENGINE SIDE WIRING AND INTERFACE

This electronic product information and data are the property of the Cummins Power Generation business unit of Cummins Inc. and its affiliated companies. Consent is granted for copies to be made of this information and data for personal use only. This consent is conditioned upon your agreement not to use the information and data for commercial purposes and not to remove any copyright notices contained within the information and data. All rights reserved. Any use of this information and data for commercial purposes, and any modification of the data or data compilations, or any use of the data on any other website or networked computer environment is prohibited.

CUMMINS VANDYKE LLC
CORPORATE OFFICE
1600 BLEKEMP ROAD
WHITE BEAR LAKE, MN
WWW.CUMMINSVANDYKE.COM

CUSTOM DESIGN AND LIGHT CENTER
875 LAWRENCE DRIVE
DE PERE, WISCONSIN

SCHEMATIC, CONTROLS INTERFACE
KTA19SLB w/ PCC2300

ANGULAR DIMENSIONS ± 1°	IMPERIAL UNITS	METRIC UNITS	DWG UNITS: INCH/LB/S	DRAWN BY: KAK	DATE: 23 AUG 2011
UNLESS OTHERWISE SPECIFIED ALL DIMENSION TOLERANCES ARE	AUTO CAD				INT ECO:
THIRD ANGLE PROJECTION	X: ±1/16"	X: ±1.6	SCALE:	SHEET 1OF3	DRAWING NO: GFEB-PCC2.3-WIRING
	.X: ±1/16"	.X: ±0.8	EST WEIGHT:		
	.XX: ±1/16"	.XX: ±0.8			

REV	ECO	DESCRIPTION OF REVISION	BY	DATE
A	2013-721	REMOVED C7. ADDED SHEET 3, ADDED JUMPER BETWEEN TERMINALS C3 & C8.	KAK	25NOV2013

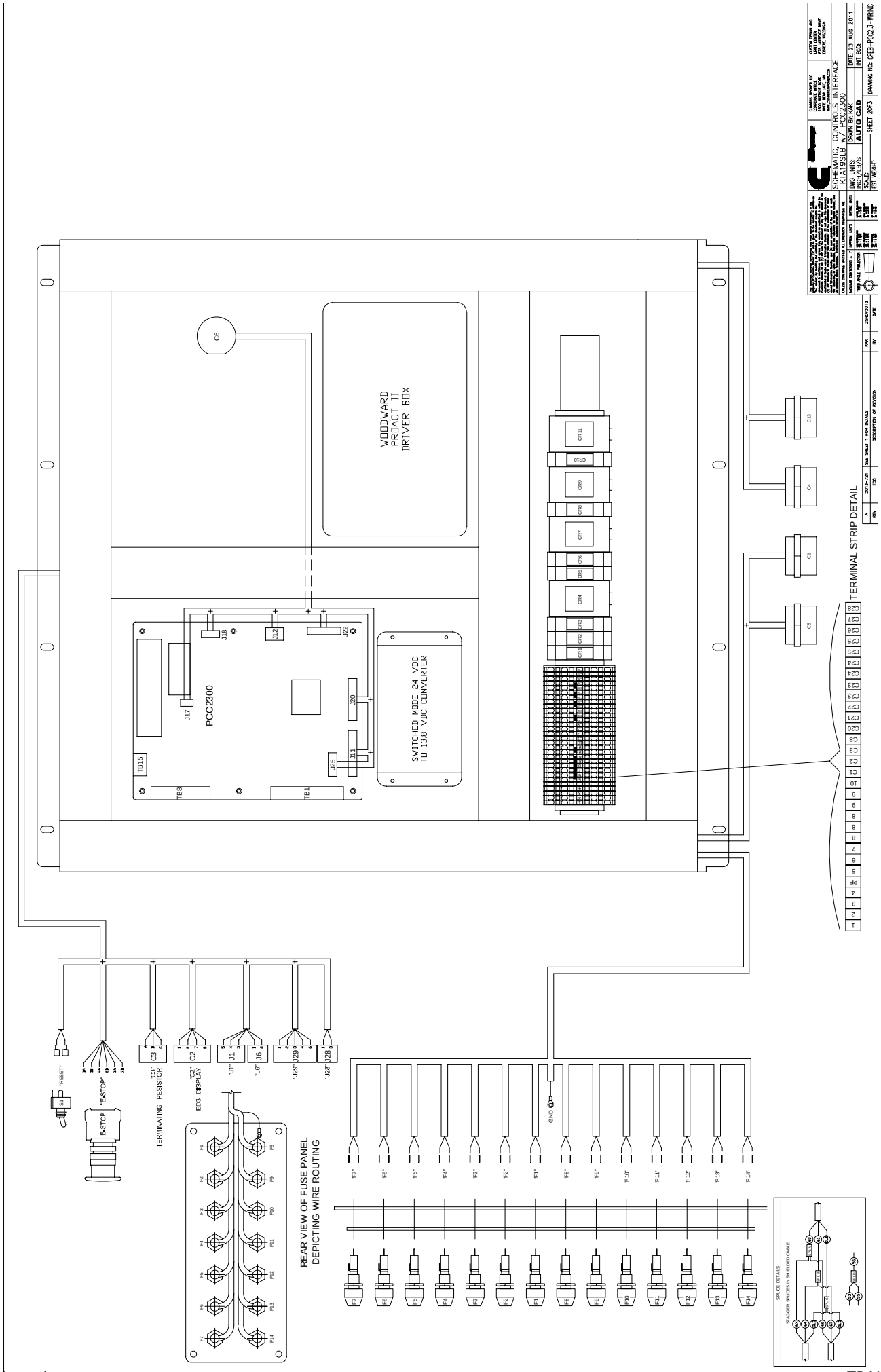
WOODWARD
PROACT II
DRIVER BOX
PCC2300
SWITCHED MODE 24 VDC
TO 13.8 VDC CONVERTER
TERMINAL STRIP DETAIL
REAR VIEW OF FUSE PANEL
DEPICTING WIRE ROUTING
TERMINATING RESISTOR
ED3 DISPLAY
E-STOP
"RESET"
"E-STOP"
"C3"
"C2"
"J1"
"J6"
"J29"
"J28"
GND
SPLICE DETAILS
STAGGER SPLICES IN SHIELDED CABLE
SCHEMATIC, CONTROLS INTERFACE
KTA19SLB w/ PCC2300
DWG UNITS: INCH/LB/S
DRAWN BY: KAK
AUTO CAD
DATE: 23 AUG 2011
SHEET 2OF3
DRAWING NO: GFEB-PCC2.3-WIRING
Page 3329 of 3859

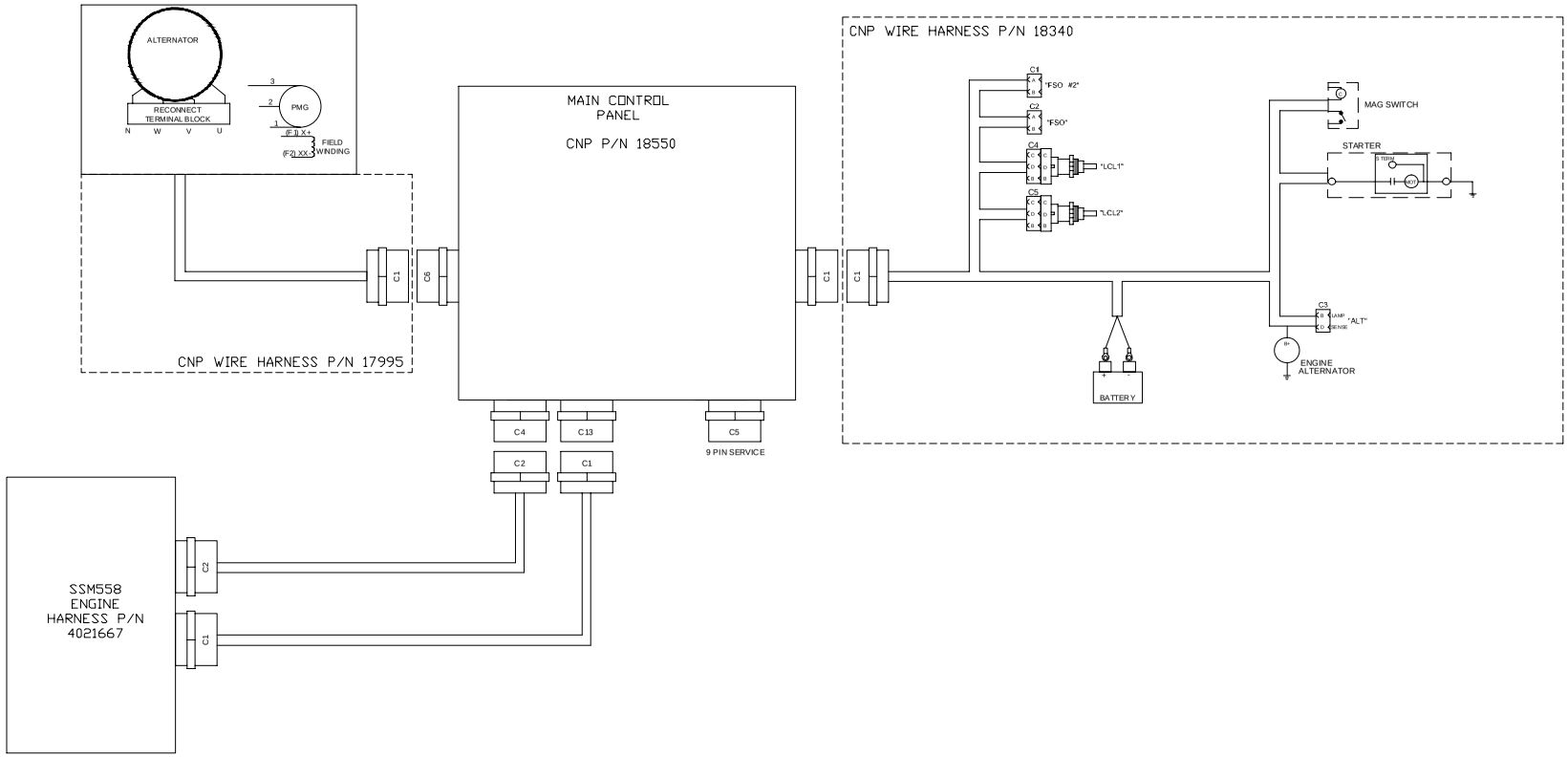

REV	ECO	DESCRIPTION OF REVISION	BY	DATE
A	2013-721	SEE SHEET 1 FOR DETAILS	KAK	25NOV2013

UNLESS OTHERWISE SPECIFIED ALL DIMENSION TOLERANCES ARE
ANGULAR DIMENSIONS ± 1°
THIRD ANGLE PROJECTION
IMPERIAL UNITS
METRIC UNITS

CUMMINS INPOWER LLC
CORPORATE OFFICE
1600 BLEDSOE ROAD
WHITE BEAR LAKE, MN
WWW.CUMMINSINPOWER.COM

CUSTOM DESIGN AND LIGHT CENTER
875 LAWRENCE DRIVE
DEPERE, WISCONSIN

SCHEMATIC, CONTROLS INTERFACE
KTA19SLB W/ PCC2300

DWG UNITS: INCH/LB/S
SCALE:
EST WEIGHT:
DRAWN BY: KAK
AUTO CAD
SHEET 3OF3
DATE: 23 AUG 2011
INT ECO:
DRAWING NO: GFEB-PCC2.3-WIRING

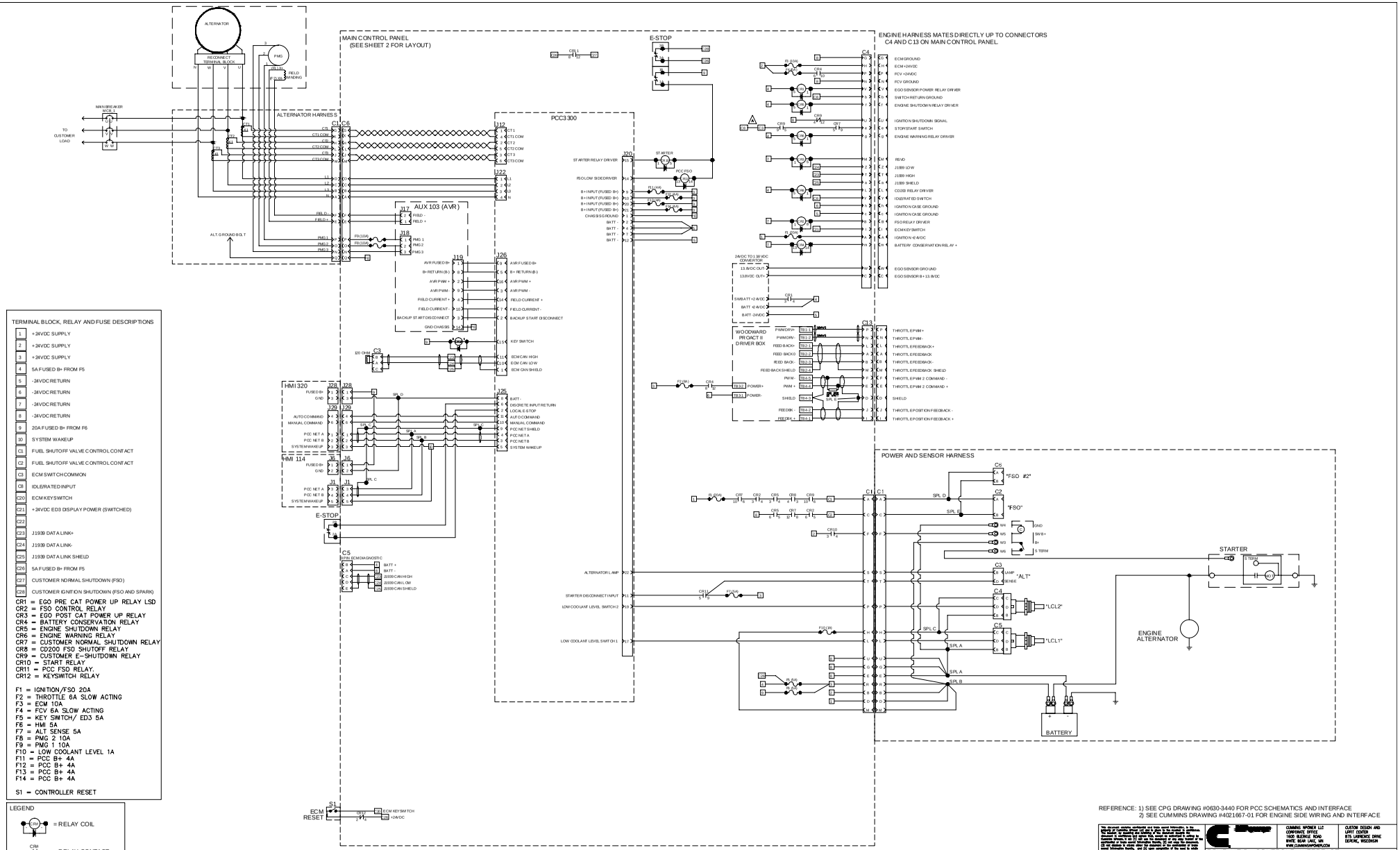

TERMINAL BLOCK, RELAY AND FUSE DESCRIPTIONS

1	+24VDC SUPPLY
2	+24VDC SUPPLY
3	+24VDC SUPPLY
4	5A FUSED B+ FROM F5
5	-24VDC RETURN
6	-24VDC RETURN
7	-24VDC RETURN
8	-24VDC RETURN
9	20A FUSED B+ FROM F6
10	SYSTEM WAKEUP
C1	FUEL SHUTOFF VALVE CONTROL CONTACT
C2	FUEL SHUTOFF VALVE CONTROL CONTACT
C3	ECM SWITCH COMMON
C8	IDLERATED INPUT
C20	ECM KEYSWITCH
C21	+24VDC ED3 DISPLAY POWER (SWITCHED)
C22	
C23	J1939 DATA LINK+
C24	J1939 DATA LINK-
C25	J1939 DATA LINK SHIELD
C26	5A FUSED B+ FROM F5
C27	CUSTOMER NORMAL SHUTDOWN (FSO)
C28	CUSTOMER IGNITION SHUTDOWN (FSO AND SPARK)

CR1 = EGO PRE CAT POWER UP RELAY LSD
CR2 = FSO CONTROL RELAY
CR3 = EGO POST CAT POWER UP RELAY
CR4 = BATTERY CONSERVATION RELAY
CR5 = ENGINE SHUTDOWN RELAY
CR6 = ENGINE WARNING RELAY
CR7 = CUSTOMER NORMAL SHUTDOWN RELAY
CR8 = CD200 FSO SHUTOFF RELAY
CR9 = CUSTOMER E-SHUTDOWN RELAY
CR10 = START RELAY
CR11 = PCC FSO RELAY.
CR12 = KEYSWITCH RELAY

F1 = IGNITION/FSO 20A
F2 = THROTTLE 6A SLOW ACTING
F3 = ECM 10A
F4 = FCV 6A SLOW ACTING
F5 = KEY SWITCH/ ED3 5A
F6 = HMI 5A
F7 = ALT SENSE 5A
F8 = PMG 2 10A
F9 = PMG 1 10A
F10 = LOW COOLANT LEVEL 1A
F11 = PCC B+ 4A
F12 = PCC B+ 4A
F13 = PCC B+ 4A
F14 = PCC B+ 4A

S1 = CONTROLLER RESET

LEGEND

= RELAY COIL

= RELAY CONTACT

= TERMINAL BLOCK

REFERENCE: 1) SEE CPG DRAWING #0630-3440 FOR PCC SCHEMATICS AND INTERFACE
2) SEE CUMMINS DRAWING #4021667-01 FOR ENGINE SIDE WIRING AND INTERFACE

REV	ECO	DESCRIPTION OF REVISION	BY	DATE
A	2013-721	REMOVED C7. ADDED SHEET 3, ADDED JUMPER BETWEEN TERMINALS C3 & C8.	KAK	25NOV2013

CUMMINS NPOWER LLC
CORPORATE OFFICE
1600 BLEDSOE ROAD
WHITE BEAR LAKE, MN
WWW.CUMMINSNPOWER.COM

CUSTOM DESIGN AND LIGHT CENTER
875 LAWRENCE DRIVE
DEPERE, WISCONSIN

UNLESS OTHERWISE SPECIFIED ALL DIMENSION TOLERANCES ARE:
ANGULAR DIMENSIONS ± 1°
IMPERIAL UNITS
METRIC UNITS
THIRD ANGLE PROJECTION

SCHEMATIC, CONTROLS INTERFACE
KTA19SLB w/ PCC3300

DWG UNITS: INCH/LB/S
DRAWN BY: KAK
DATE: 23 AUG 2011
INT ECO:
AUTO CAD
SCALE:
EST WEIGHT:
SHEET 1OF3
DRAWING NO: GFEB-PCC3.3-WIRING

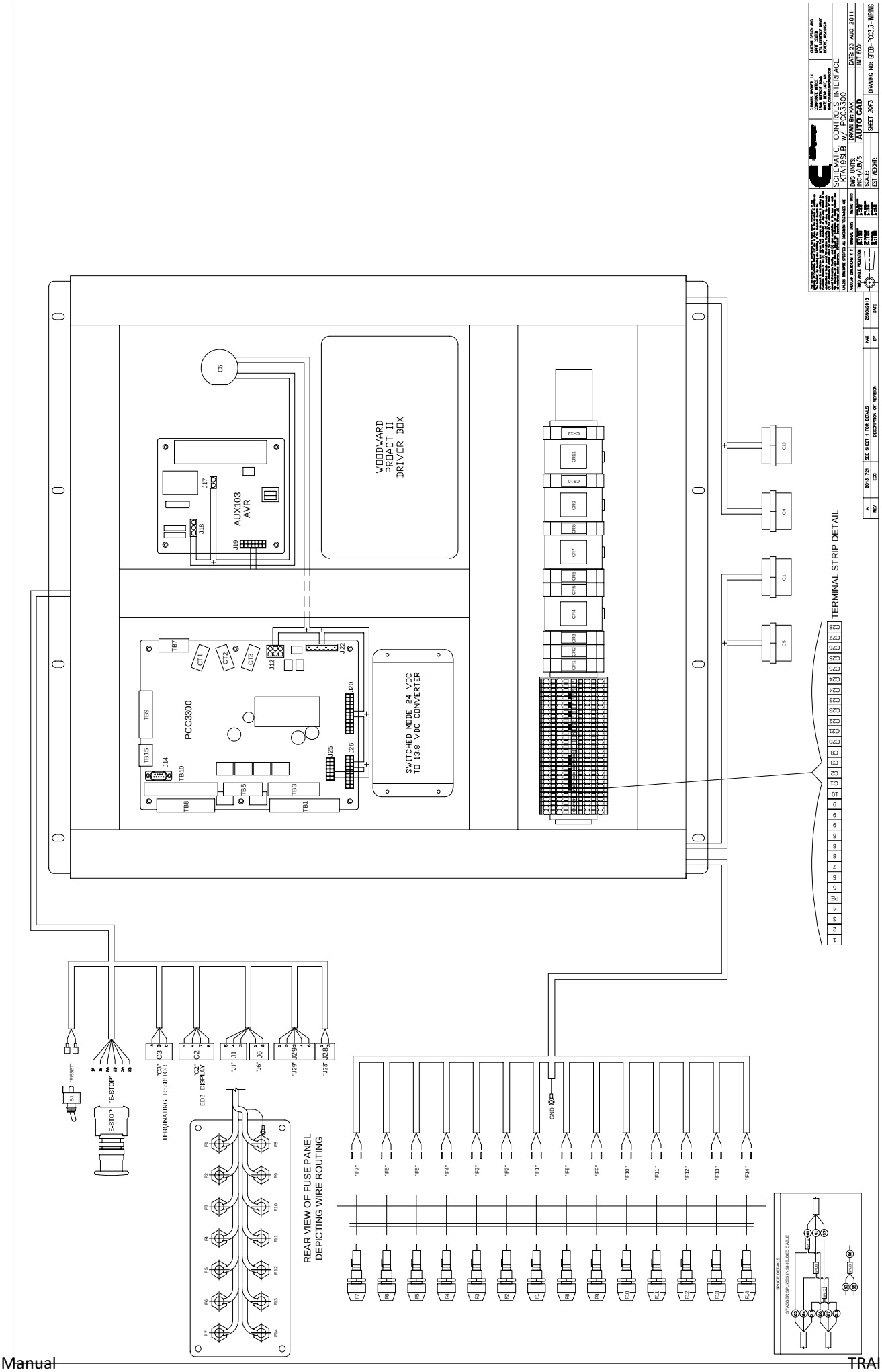
WOODWARD
PROACT II
DRIVER BOX
AUX103
AVR
PCC3300
SWITCHED MODE 24 VDC
TO 13.8 VDC CONVERTER
TERMINAL STRIP DETAIL
REAR VIEW OF FUSE PANEL
DEPICTING WIRE ROUTING
TERMINATING RESISTOR
ED3 DISPLAY
E-STOP
"RESET"
"E-STOP"
"C3"
"C2"
"J1"
"J6"
"J29"
"J28"
GND
SPLICE DETAILS
STAGGER SPLICES IN SHIELDED CABLE
SCHEMATIC, CONTROLS INTERFACE
KTA19SLB w/ PCC3300
DWG UNITS:
INCH/LB/S
DRAWN BY: KAK
AUTO CAD
DATE: 23 AUG 2011
INT ECO:
SCALE:
EST WEIGHT:
SHEET 2 OF 3
DRAWING NO: GFEB-PCC3.3-WIRING
Page 1332 of 1859

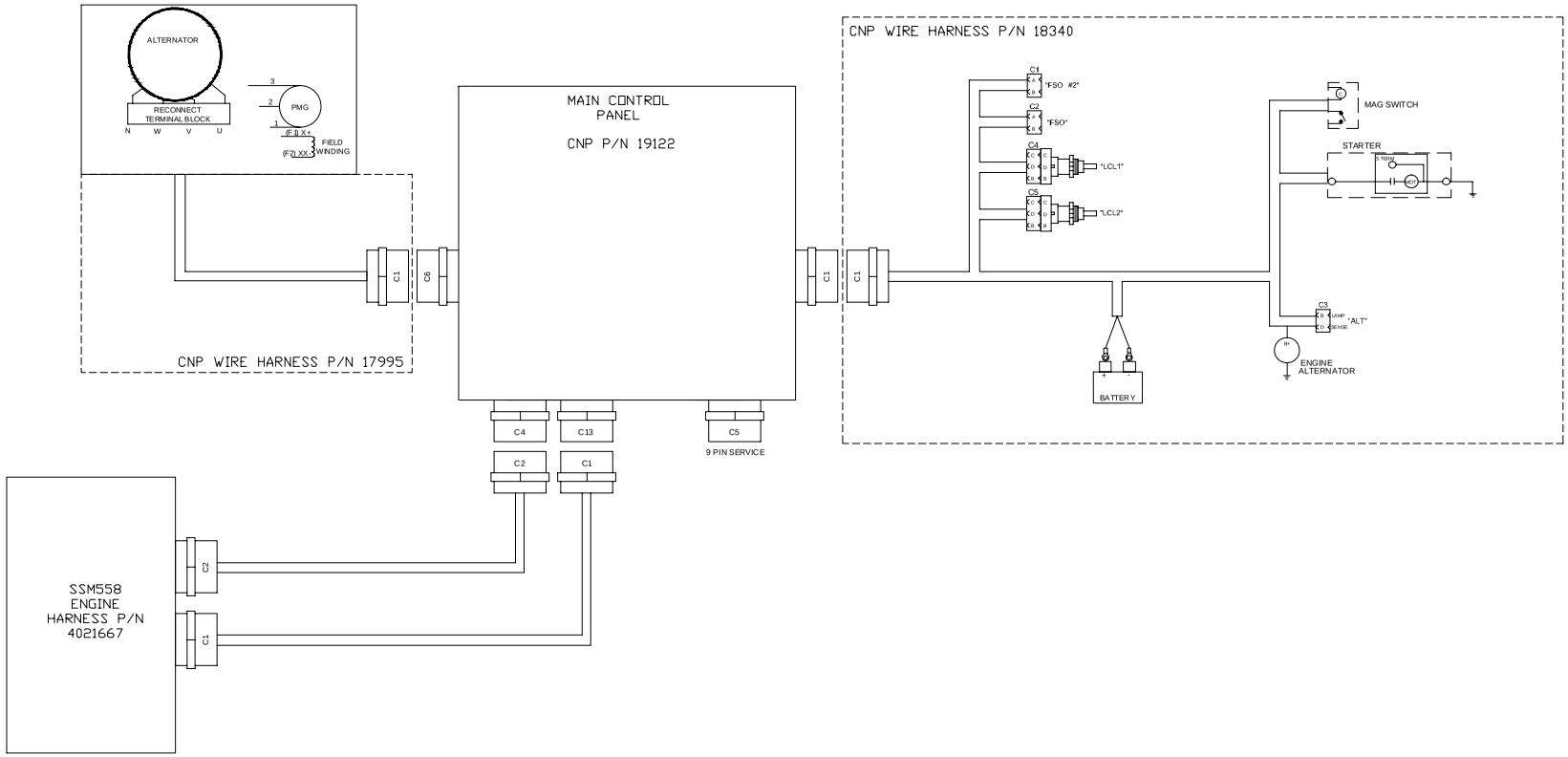

REV	ECO	DESCRIPTION OF REVISION	BY	DATE
A	2013-721	SEE SHEET 1 FOR DETAILS	KAK	25NOV2013

This electronic version maintained on this server was created by the Cummins Power Generation Technical Publications Department. Any alteration of this electronic document or its data, or any unauthorized distribution of this electronic document or its data, is strictly prohibited. Cummins Power Generation makes no warranties, expressed or implied, with respect to this electronic document or its data, including but not limited to any implied warranties of merchantability and fitness for a particular purpose. In no event will Cummins Power Generation be liable for direct, indirect, special, incidental or consequential damages arising out of the use of or inability to use this electronic document or its data. Any use of this electronic document or its data is at the user's sole risk. The user assumes all responsibility for determining the adequacy and accuracy of the information contained in this electronic document or its data.

UNLESS OTHERWISE SPECIFIED ALL DIMENSION TOLERANCES ARE

ANGULAR DIMENSIONS ± 1°	IMPERIAL UNITS	METRIC UNITS
THIRD ANGLE PROJECTION	X: 1/16"	X: 2
	X: 1/64"	X: 1
	X: 1/128"	X: 0.5

CUMMINS VANDYNE LLC
CORPORATE OFFICE
1600 BLEIKER ROAD
WHITE BEAR LAKE, MN
WWW.CUMMINSVANDYNE.COM

CUSTOM DESIGN AND LIMIT CENTER
875 LAWRENCE DRIVE
DE PERE, WISCONSIN

SCHEMATIC, CONTROLS INTERFACE
KTA19SLB W/ PCC3300

DWG UNITS: INCH/LB/S
SCALE:
EST WEIGHT:

DRAWN BY: KAK
DATE: 23 AUG 2011
AUTO CAD
INT ECO:
SHEET 30F3
DRAWING NO: GFEB-PCC3.3-WIRING

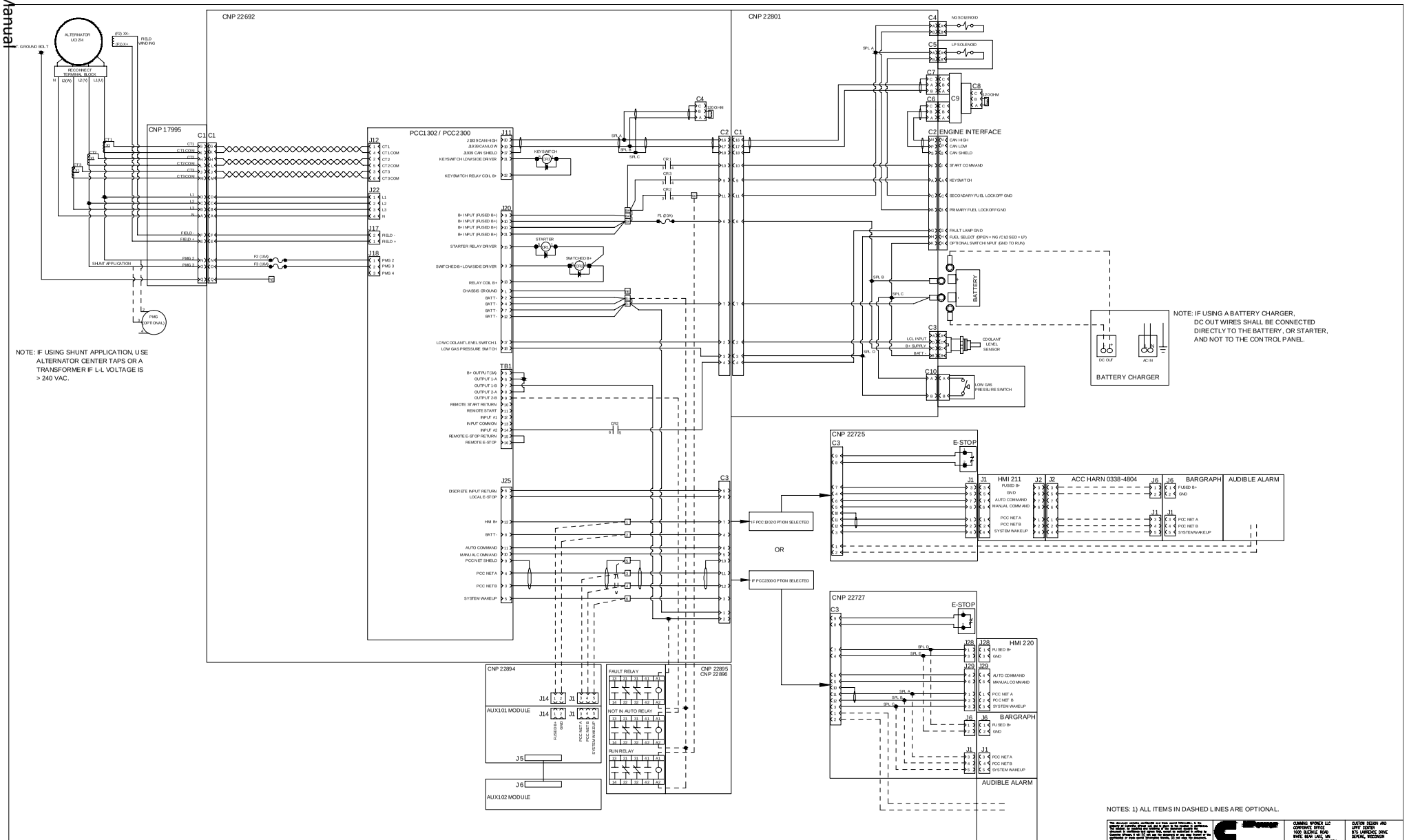
CNP 22692
CNP 22801
CNP 17995
PCC1302 / PCC2300
ALTERNATOR LC1214
RECONNECT TERMINAL BLOCK
ENGINE INTERFACE
BATTERY
BATTERY CHARGER
NOTE: IF USING SHUNT APPLICATION, USE ALTERNATOR CENTER TAPS OR A TRANSFORMER IF L-L VOLTAGE IS > 240 VAC.
NOTE: IF USING A BATTERY CHARGER, DC OUT WIRES SHALL BE CONNECTED DIRECTLY TO THE BATTERY, OR STARTER, AND NOT TO THE CONTROL PANEL.
CNP 22725
HMI 211
ACC HARN 0338-4804
BARGRAPH
AUDIBLE ALARM
CNP 22727
HMI 220
CNP 22894
AUX101 MODULE
AUX102 MODULE
CNP 22895
CNP 22896
FAULT RELAY
NOT IN AUTO RELAY
RUN RELAY
OR
NOTES: 1) ALL ITEMS IN DASHED LINES ARE OPTIONAL.
CUMMINS NPOWER LLC
CORPORATE OFFICE
1600 BLEIKER ROAD
WHITE BEAR LAKE, MN
WWW.CUMMINSNPOWER.COM
CUSTOM DESIGN AND LIMIT CENTER
875 LAWRENCE DRIVE
DEPERE, WISCONSIN
SCHEMATIC, OVERALL
GFPA MODEL
DWG UNITS: INCH/LB/S
DRAWN BY: KAK
AUTO CAD
DATE: 29 AUG 2012
INT ECO: 2012-357
SCALE:
EST WEIGHT:
SHEET 1OF1
DRAWING NO: 22726
REV
ECO
DESCRIPTION OF REVISION
BY
DATE

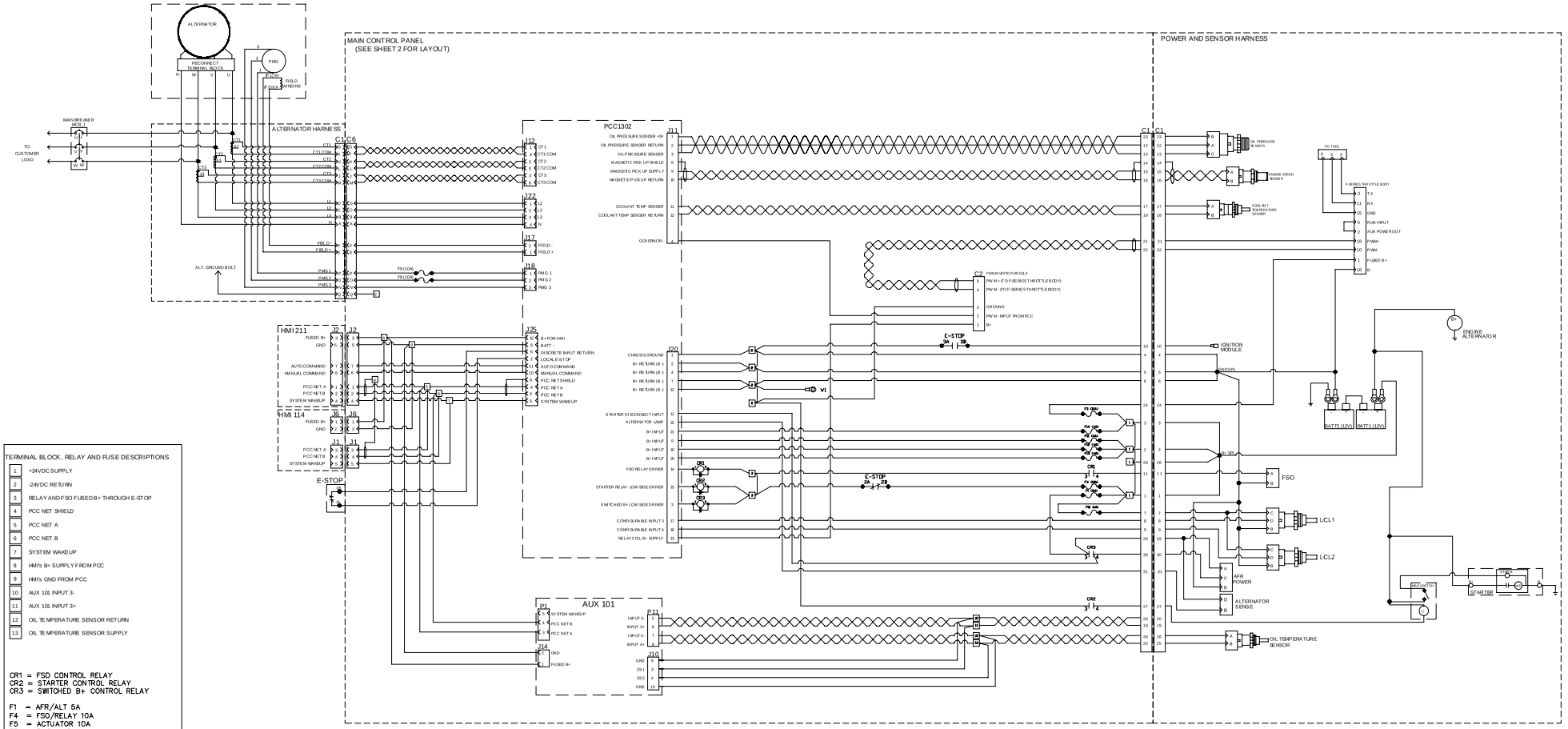

TERMINAL BLOCK, RELAY AND FUSE DESCRIPTIONS

1	+24VDC SUPPLY
2	-24VDC RETURN
3	RELAY AND FSO FUSED B+ THROUGH E-STOP
4	PCC NET SHIELD
5	PCC NET A
6	PCC NET B
7	SYSTEM WAKEUP
8	HMI's B+ SUPPLY FROM PCC
9	HMI's GND FROM PCC
10	AUX 101 INPUT 3-
11	AUX 101 INPUT 3+
12	OIL TEMPERATURE SENSOR RETURN
13	OIL TEMPERATURE SENSOR SUPPLY

CR1 = FSO CONTROL RELAY
CR2 = STARTER CONTROL RELAY
CR3 = SWITCHED B+ CONTROL RELAY

F1 = AFR/ALT 5A
F4 = FSO/RELAY 10A
F5 = ACTUATOR 10A
F8 = PMG 1 10A
F9 = PMG 2 10A
F10 = LOW COOLANT LEVEL 1A
F11 = PCC 4A
F12 = PCC 4A
F13 = PCC 4A
F14 = PCC 4A

LEGEND

= RELAY COIL

= RELAY CONTACT

= TERMINAL BLOCK

REFERENCE: 1) SEE CPG DRAWING #0630-3440 FOR PCC SCHEMATICS AND INTERFACE

This electronic artwork, schematic and data were developed by the Cummins Power Generation business unit of Cummins Inc. and are the property of Cummins Inc. and its licensors. You may not use, copy, distribute or transmit this artwork in any form or by any means without the express written permission of Cummins Inc. Unauthorized use of this artwork violates the intellectual property rights of Cummins Inc. and may result in civil and criminal penalties. Copyright Cummins Inc. All rights reserved.

REV	ECO	DESCRIPTION OF REVISION	BY	DATE

CUMMINS POWER LLC
CORPORATE OFFICE
1400 ELDRIDGE ROAD
WHITE BEAR LAKE, MN
WWW.CUMMINSPOWER.COM

CUSTOM DESIGN AND LIMIT CENTER
875 LAWRENCE DRIVE
DE PERE, WISCONSIN

SCHEMATIC, CONTROLS INTERFACE
HM ENG W/ PCC1302

UNLESS OTHERWISE SPECIFIED ALL DIMENSION TOLERANCES ARE
ANGULAR DIMENSIONS ± 1°
THIRD ANGLE PROJECTION

IMPERIAL UNITS	METRIC UNITS
X: ±1/16"	X: ±1.5
X: ±1/64"	X: ±1.0
X: ±1/128"	X: ±0.5

DWG UNITS: INCH/LB/S
SCALE:
EST WEIGHT:

DRAWN BY: KAK
DATE: 31 MAY 2013
AUTO CAD
INT. ECO:
SHEET 1OF2
DRAWING NO: 25538

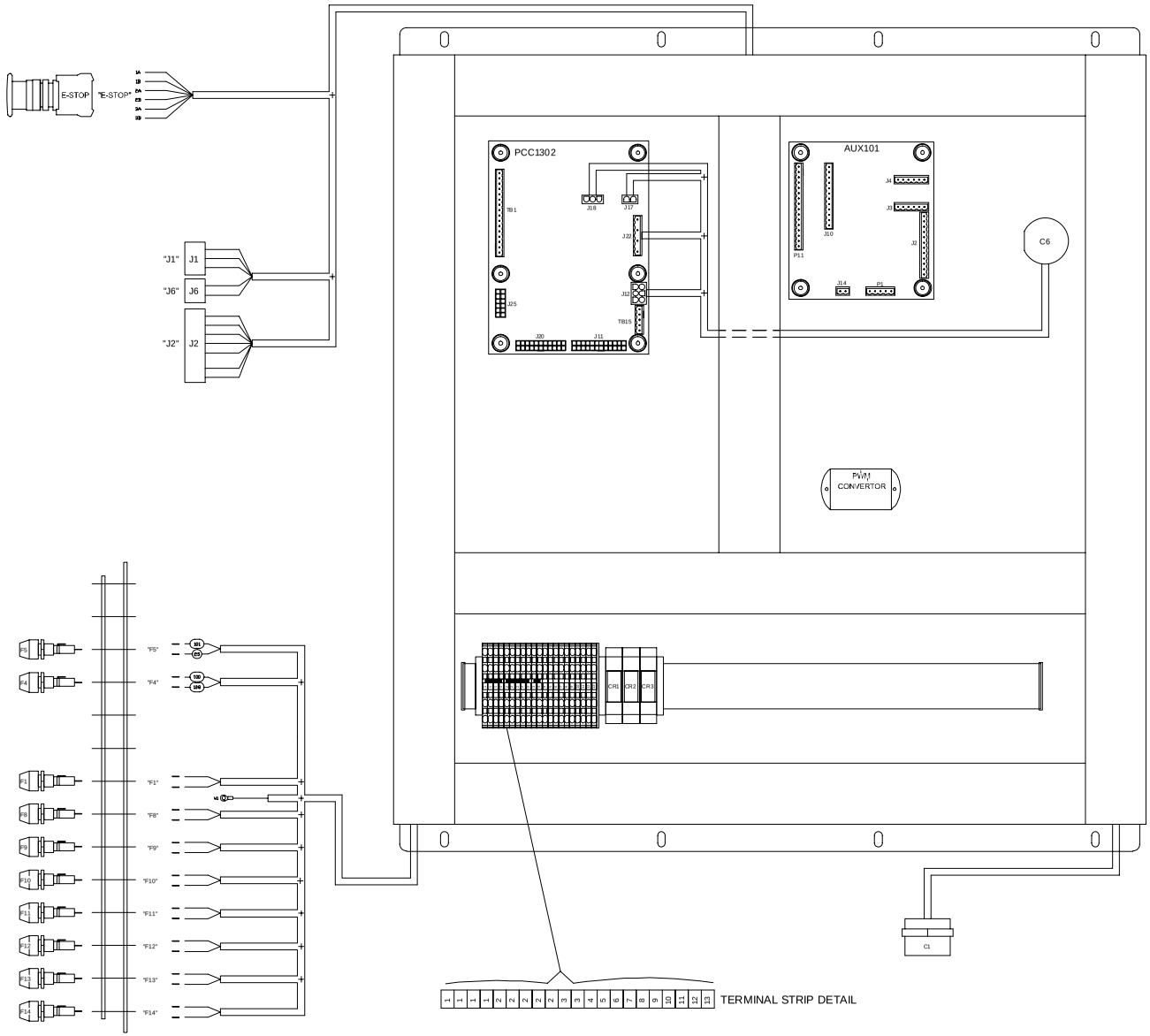

REV	ECO	DESCRIPTION OF REVISION	BY	DATE

CUMMINS NPOWER LLC
CORPORATE OFFICE
1600 BLEIKER ROAD
WHITE BEAR LAKE, MN
WWW.CUMMINSNPOWER.COM

CUSTOM DESIGN AND
UPFIT CENTER
875 LAWRENCE DRIVE
DE PERE, WISCONSIN

CONTROLS, INTERFACE BOX
HM ENG W/ PCC1302

UNLESS OTHERWISE SPECIFIED ALL DIMENSION TOLERANCES ARE:

ANGULAR DIMENSIONS ± 1°	IMPERIAL UNITS	METRIC UNITS
THIRD ANGLE PROJECTION	X: ± 1/16"	X: ± 1.5
	X: ± 1/64"	X: ± 1.0
	X: ± 1/128"	X: ± 0.5

DWG UNITS: INCH/LB/S
SCALE:
EST WEIGHT:

DRAWN BY: KAK
AUTO CAD
DATE: 31 MAY 2013
INT ECO:
SHEET 2OF2
DRAWING NO: 25538

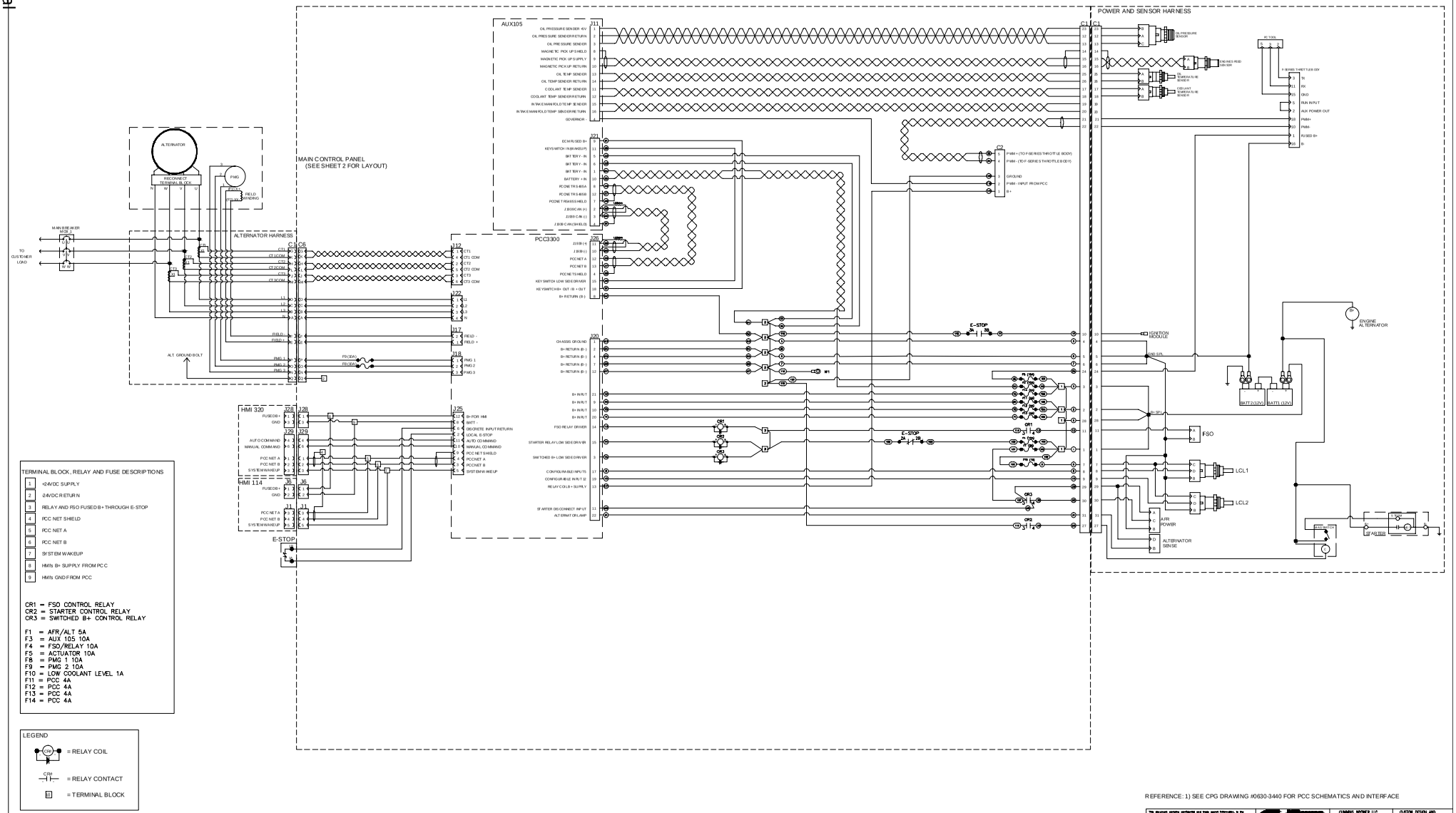

TERMINAL BLOCK, RELAY AND FUSE DESCRIPTIONS

1	+24VDC SUPPLY
2	-24VDC RETURN
3	RELAY AND FSO FUSED B+ THROUGH E-STOP
4	PCC NET SHIELD
5	PCC NET A
6	PCC NET B
7	SYSTEM WAKEUP
8	HMI's B+ SUPPLY FROM PCC
9	HMI's GND FROM PCC

CR1 = FSO CONTROL RELAY
CR2 = STARTER CONTROL RELAY
CR3 = SWITCHED B+ CONTROL RELAY

F1 = AFR/ALT 5A
F3 = AUX 105 10A
F4 = FSO/RELAY 10A
F5 = ACTUATOR 10A
F8 = PMG 1 10A
F9 = PMG 2 10A
F10 = LOW COOLANT LEVEL 1A
F11 = PCC 4A
F12 = PCC 4A
F13 = PCC 4A
F14 = PCC 4A

LEGEND

= RELAY COIL

= RELAY CONTACT

= TERMINAL BLOCK

REFERENCE: 1) SEE CPG DRAWING #0630-3440 FOR PCC SCHEMATICS AND INTERFACE

REV	ECO	DESCRIPTION OF REVISION	BY	DATE

This electronic assembly and all data and information in this file (the "Data") are the property of Cummins Power Generation and contain proprietary information owned by Cummins Power Generation and its licensors. The Data is provided and accepted by the receiving party ("Licensee") on a non-exclusive, non-assignable, royalty-free, limited license basis. Licensee's rights to use the Data are limited to the terms and conditions of the license agreement, if any, between Licensee and Cummins Power Generation. Cummins Power Generation makes no warranties, express or implied, including without limitation, the implied warranties of merchantability and fitness for a particular purpose, regarding the Data. Cummins Power Generation has no obligation to provide any updates to the Data. In no event shall Cummins Power Generation be liable for Licensee's use of the Data or for any loss or damage arising, directly or indirectly, from Licensee's use of the Data. Any unauthorized use of the Data is strictly prohibited.

UNLESS OTHERWISE SPECIFIED ALL DIMENSION TOLERANCES ARE

ANGULAR DIMENSIONS ± 1°	IMPERIAL UNITS	METRIC UNITS
THIRD ANGLE PROJECTION	X: ±1/16"	X: ±2 MM
	X: ±1/64"	X: ±1 MM
	X: ±1/128"	X: ±0.5 MM

CUMMINS VANDYNE LLC
CORPORATE OFFICE
1600 BLEIGNE ROAD
WHITE BEAR LAKE, MN
WWW.CUMMINSVANDYNE.COM

CUSTOM DESIGN AND LIMIT CENTER
875 LAWRENCE DRIVE
DE PERE, WISCONSIN

SCHEMATIC, CONTROLS INTERFACE HM ENG W/ PCC3300

DWG UNITS:	DRAWN BY: KAK	DATE: 31 MAY 2013
INCH/LB/S	AUTO CAD	INT ECO:
SCALE:	SHEET 10F2	DRAWING NO: 25539
EST WEIGHT:		

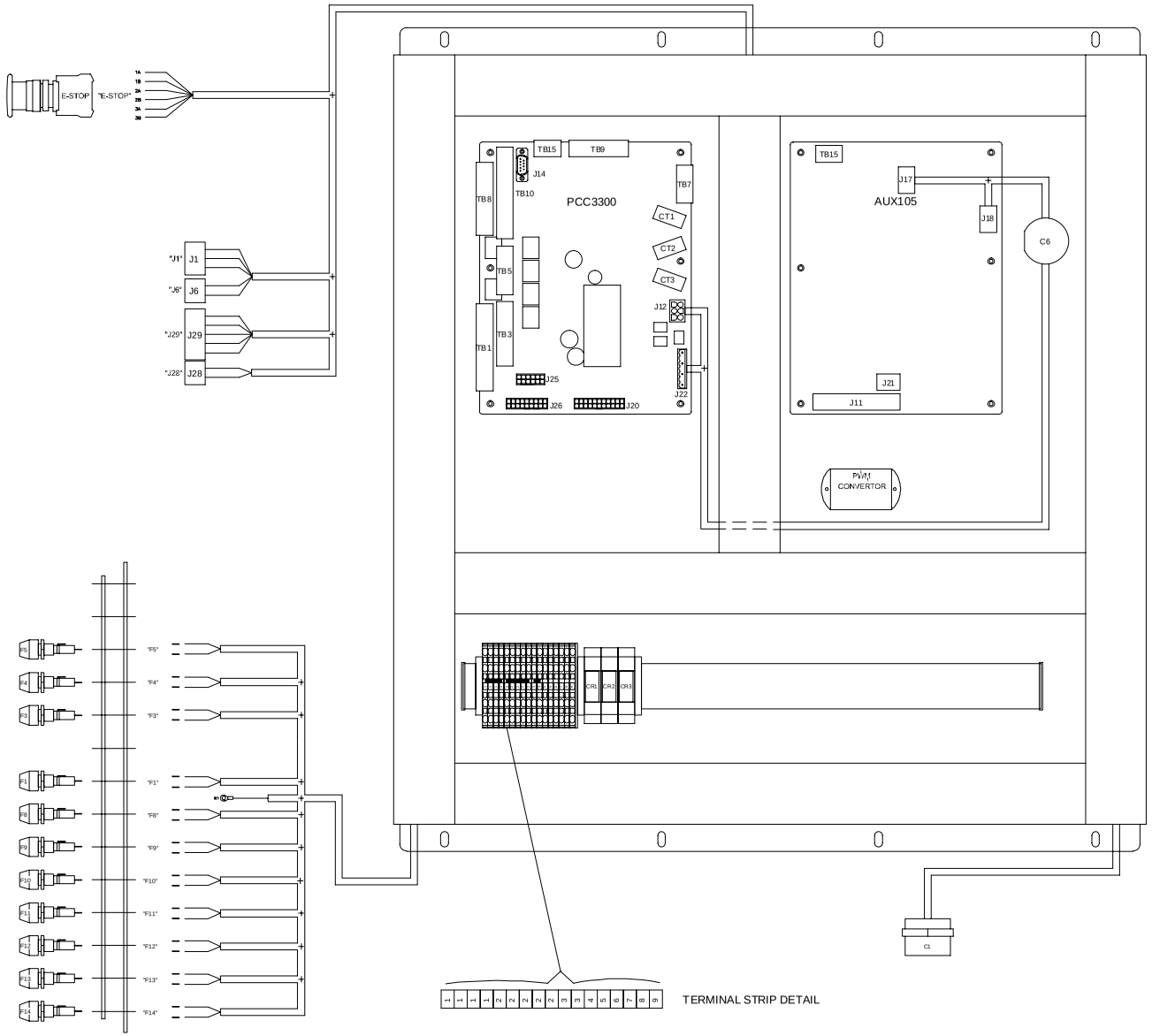

TERMINAL STRIP DETAIL

REV	ECO	DESCRIPTION OF REVISION	BY	DATE

This electronic version maintained at this site is the property of Cummins Power Generation and is provided for reference purposes only. Any duplication or modification of this electronic drawing for any commercial purpose is prohibited. Cummins Power Generation makes no warranty as to the accuracy, completeness or suitability of the information provided on this drawing for any particular purpose. Under no circumstances will Cummins Power Generation be liable for any damages whatsoever arising out of the use of or inability to use this drawing or the information contained on this drawing, even if Cummins Power Generation has been specifically advised of the possibility of such damages.

UNLESS OTHERWISE SPECIFIED ALL DIMENSION TOLERANCES ARE

ANGULAR DIMENSIONS ± 1°	IMPERIAL UNITS	METRIC UNITS
THIRD ANGLE PROJECTION	X: ± 1/16"	X: ± 1.5
	X: ± 1/64"	X: ± 1.0
	X: ± 1/128"	X: ± 0.5

CUMMINS NPOWER LLC
CORPORATE OFFICE
1600 BLUEROCK ROAD
WHITE BEAR LAKE, MN
WWW.CUMMINSNPOWER.COM

CUSTOM DESIGN AND LIMIT CENTER
875 LAWRENCE DRIVE
DE PERE, WISCONSIN

CONTROLS, INTERFACE BOX
HM ENG W/ PCC3300

DWG UNITS:	DRAWN BY: KAK	DATE: 31 MAY 2013
INCH/LB/S	AUTO CAD	INT. ECO:
SCALE:	SHEET 2OF2	DRAWING NO: 25539
EST WEIGHT:		

Cummins NPower, LLC
1600 Buerkle Rd
White Bear Lake, MN 55110
Customer Assistance Center: 1 866 831 7620
www.cumminsnpower.com

Transfer Switch Manuals

www.cumminspower.com
Cummins, the "C" logo, and "Our energy working for you." are trademarks of Cummins Inc.
Copyright © 2013 Cummins Power Generation, Inc. All rights reserved.

Operator Manual

Transfer Switch

40-4000 Amps

OTPCA (Spec A)
OTPCB (Spec A)
OTPCC (Spec A)
OTPCD (Spec A)
OTPCE (Spec A-C)
OTPCF (Spec A-B)
OTPCG (Spec A-B)
OTPCH (Spec A-B)
OTPCJ (Spec A)

Table of Contents

1. SAFETY PRECAUTIONS 1
   1.1 Electrical Shock and Arc Flash Can Cause Severe Personal Injury or Death 1
   1.2 General Precautions 1

2. INTRODUCTION 3
   2.1 Operator Manual 3
   2.2 How to Obtain Service 3
   2.3 Model Identification 4
   2.4 Transfer Switch Application 4
   2.5 Specifications 5
      2.5.1 Model OTPC 5
   2.6 Automatic Transfer Switch Typical Function 6
      2.6.1 Open Transition with Sync Check 6
      2.6.2 Programmed Transition 6
      2.6.3 Closed Transition 6
   2.7 Utility-to-Generator Set Operation 6
   2.8 Utility-to-Utility Operation 6
   2.9 Generator-to-Generator Operation 7
      2.9.1 Prime Power (Plant-to-Plant) Operation 8
      2.9.2 Dual Stand-By Operation 9
   2.10 Control Level 1 and Level 2 10

3. DESCRIPTION 11
   3.1 Cabinet 11
   3.2 Protective Relay 11
   3.3 Transfer Switch Components 14
      3.3.1 Contact Assemblies 14
      3.3.2 Linear Actuator 14
      3.3.3 Motor Disconnect Switch (150-1000 Amp Switches) 15
      3.3.4 Motor Disconnect Switch (1200-4000 Amp Switches) 15
      3.3.5 Auxiliary Contacts 15
   3.4 Electronic Control System 15
      3.4.1 Time Delays 16
      3.4.2 System Sensors 18
      3.4.3 Transfer Modes 24
      3.4.4 Front Panel Test - Sequence of Events 29
   3.5 Options 39
      3.5.1 Battery Charger Options 39
      3.5.2 PowerCommand Network Interface Option 47
      3.5.3 Load Sequencing Option 51
      3.5.4 Load Current and Power Sensor Option 51
      3.5.5 Source 1 and Source 2 Connected Relays 52

3.5.6 Source 1 and Source 2 Available Relays 52
3.5.7 Test or Exercise Active Relay 52
3.5.8 Load Shed Relay 52
3.5.9 Fail to Transfer/Retransfer Relay 52
3.5.10 Fail to Synchronize Relay 52
3.5.11 Fail to Disconnect Relay 52
3.5.12 Elevator Pre-Transfer Delay Relay 53
3.5.13 Not-in-Auto Relay 53
3.6 Control Panel (PowerCommand Control) 53
3.6.1 Bar Graph Meter Panel 53
3.6.2 Switch Panel 54
3.6.3 Digital Display 55
3.6.4 Time Delay Glossary 56

4. OPERATION 59
4.1 Manual Operation 59
4.1.1 Manual Operation - 40 to 1000 Amp Switches 59
4.1.2 Manual Operation - 1200 to 4000 Amp Switches 59
4.2 Automatic Operation 61
4.2.1 Motor Disconnect Switch 61
4.3 System Testing 62
4.3.1 Generator Set Manual Start Test 62
4.3.2 With-Load Standby System Test 62
4.4 Generator Set Exercise 62
4.5 Planned Maintenance 63

5. DIGITAL DISPLAY MENU SYSTEM 65
5.1 Main Menus 65
5.2 Password and Setup Menus 65
5.3 Navigation 65
5.4 Main Menu Descriptions 66
5.4.1 First Main Menu 66
5.4.2 Second Main Menu 68
5.4.3 Third Main Menu 69
5.4.4 Setup Menu Navigation and Description 72

6. WIRING CONSIDERATIONS FOR CLOSED TRANSITION SWITCHES 85
6.1 Wiring Considerations for Closed Transition Transfer Switches 85
6.2 Re-transfer and transfer inhibit functions 85
6.3 Fail to disconnect 87

7. TROUBLESHOOTING 89
7.1 Control Module LED Indicators and Switch 89
7.2 Fault Flash-Out 90
7.3 Exerciser Enable/Disable Switch 90
7.4 Troubleshooting Transfer Switch With the Digital Display 90
7.4.1 Fault Events 91

7.5 Fault Event Definitions 92
7.5.1 Controller Checksum Error 92
7.5.2 Low Controller Battery 92
7.5.3 ATS Fail to Close: Transfer 92
7.5.4 ATS Fail to Close: Re-Transfer 92
7.5.5 Battery Charger Malfunction 92
7.5.6 Network Battery Low 92
7.5.7 Network Communications Error 93
7.6 15/12-Amp Battery Charger Troubleshooting and Faults 93
7.6.1 Clearing Faults 93
7.6.2 Fault Alarm Output Connector 93
7.7 Code 101 – Source 1 Connected (Event) 94
7.8 Code 102 – Source 1 Available (Event) 94
7.9 Code 103 – Source 2 Connected (Event) 94
7.10 Code 104 – Source 2 Available (Event) 95
7.11 Code 105 – Emergency Start A (Event) 95
7.12 Code 106 – Test Start A (Event) 96
7.13 Code 107 – Emergency Start B (Event) 96
7.14 Code 108 – Test Start B (Event) 97
7.15 Code 109 – Time Delay Engine Start A (Event) 97
7.16 Code 111 – Time Delay Engine Start B (Event) 98
7.17 Code 112 – Time Delay Transfer (Event) 98
7.18 Code 113 – Time Delay Retransfer (Event) 99
7.19 Code 114 – Engine Cool-Down A (Event) 100
7.20 Code 115 – Program Transition (Event) 100
7.21 Code 116 – Transfer Pending (Event) 100
7.22 Code 117 – Test in Progress (Event) 101
7.23 Code 118 – Exercise Active (Event) 101
7.24 Code 119 – Sync Check (Event) 102
7.25 Code 121 – S1 Under Voltage (Event) 102
7.26 Code 122 – S1 Over Voltage (Event) 103
7.27 Code 123 – S1 Frequency Fail (Event) 103
7.28 Code 124 – S1 Loss Phase (Event) 103
7.29 Code 125 – S1 Imbalance Fail (Event) 104
7.30 Code 126 – S2 Under Voltage (Event) 104
7.31 Code 127 – S2 Over Voltage (Event) 105
7.32 Code 128 – S2 Frequency Fail (Event) 105
7.33 Code 129 – S2 Loss Phase (Event) 106
7.34 Code 131 – S2 Imbalance Fail (Event) 106
7.35 Code 132 – Phase Rotation Failure (Event) 107
7.36 Code 133 – Motor Disconnect (Event) 107
7.37 Code 134 – Load Shed (Event) 107
7.38 Code 135 – Transfer Inhibit (Event) 108
7.39 Code 136 – Retransfer Inhibit (Event) 108
7.40 Code 137 – Bypassed to S1 (Event) 109
7.41 Code 138 – Bypassed to S2 (Event) 109

7.42 Code 139 – Not in Auto (Fault) 110
7.43 Code 141 – Service Tool (Event) 110
7.44 Code 143 – Sync Enable (Event) 111
7.45 Code 144 – Speed Adjust (Event) 111
7.46 Code 145 – Fail to Sync (Event) 111
7.47 Code 146 – Sequencer Output 1-8 (Event) 112
7.48 Code 155 – Network Wink (Event) 112
7.49 Code 156 – Common Alarm A (Event) 113
7.50 Code 157 – Common Alarm B (Event) 113
7.51 Code 158 – Loss of Power (Event) 114
7.52 Code 159 – TD Stop B (Event) 114
7.53 Code 161 – High Neutral Amps (Event) 115
7.54 Code 162 –Preferred Source 1 (Event) 115
7.55 Code 163 –Preferred Source 2 (Event) 115
7.56 Code 164 – Source 1 Stopped (Event) 116
7.57 Code 165 – Source 2 Stopped (Event) 116
7.58 Code 167 – Control Lockout (Event) 116
7.59 Code 168 – Panel Lock (Event) 117
7.60 Code 169 – Max Parallel Time Exceeded (Event) 117
7.61 Code 441 – Low Controller Battery (Event) 118
7.62 Code 597 –Battery Charger Malfunction (Fault) 118
7.63 Code 1113 – ATS Fail to Close: Transfer (Fault) 119
7.64 Code 1114 – ATS Fail to Close: RE-Transfer (Fault) 119
7.65 Code 1121 – ATS Fail to Disconnect (Fault) 120
7.66 Code 1452 – Fail to Close S2 (Fault) 121
7.67 Code 1453 – Failed to Open S2 (Fault) 121
7.68 Code 1468 – Network Communications Error (Fault) 122
7.69 Code 2396 – Failed to Close S1 (Fault) 122
7.70 Code 2397 – Fail to Open S1 (Fault) 123

1 Safety Precautions

This manual includes the following symbols to indicate potentially dangerous conditions. Read the manual carefully and know when these conditions exist. Then, take the necessary steps to protect personnel and the equipment.

⚠ DANGER
This symbol warns of immediate hazards that will result in severe personal injury or death.

⚠ WARNING
This symbol refers to a hazard or unsafe practice that can result in severe personal injury or death.

⚠ CAUTION
This symbol refers to a hazard or unsafe practice that can result in personal injury or product or property damage.

1.1 Electrical Shock and Arc Flash Can Cause Severe Personal Injury or Death

High voltage in transfer switch components presents serious shock hazards that can result in severe personal injury or death. Read and follow these suggestions:

- The Operator **must** always keep the transfer switch cabinet closed and locked.
- Make sure only authorized personnel have the cabinet keys.
- All service and adjustments to the transfer switch **must** be performed only by an electrician or authorized service representative.

NOTICE
Whenever closed transition is used, approval to parallel with the local electric utility must be obtained.

1.2 General Precautions

Refer to NFPA 70E Standard for Electrical Safety in the Workplace to be sure the proper personal protective equipment (PPE) is worn around this product.

Follow these guidelines while working on or around electrical equipment.

- Place rubber insulated mats on dry wood platforms over metal or concrete floors when working on any electrical equipment.
- Do not wear damp clothing (particularly wet shoes) or allow skin surfaces to be damp when handling any electrical equipment.

- Remove all jewelry when working on electrical equipment.
- Wear safety glasses whenever servicing the transfer switch.
- Do not smoke near the batteries.
- Do not work on this equipment when mentally or physically fatigued, or after consuming alcohol or any drug that makes the operation of equipment unsafe.

⚠ WARNING

Incorrect service or replacement of parts can result in death, severe personal injury, and/or equipment damage. Service personnel must be qualified to perform electrical and/or mechanical service.

2 Introduction

2.1 Operator Manual

This manual covers models produced under the Cummins® and Cummins Power Generation (CPG) brand names.

The information contained within the manual is based on information available at the time of going to print. In line with Cummins Power Generation policy of continuous development and improvement, information may change at any time without notice. The users should therefore make sure that before commencing any work, they have the latest information available. The latest version of this manual is available on QuickServe Online (https://qsol.cummins.com/info/index.html).

This Operator Manual provides information necessary for the operation of the transfer switch(es) identified on the cover of this manual. The transition capabilities of the transfer switch(es) are identified in the following sections.

2.2 How to Obtain Service

When the transfer switch requires servicing, contact your nearest Cummins Power Generation distributor. Factory-trained Parts and Service representatives are ready to handle all of your service needs.

To contact your local Cummins Power Generation distributor in the United States or Canada:

- Call 1-800-888-6626 (this automated service utilizes touch-tone phones only).
- Select Option 1 (press 1) and you will be automatically connected to the distributor nearest you.

If you are unable to contact a distributor using the automated service, consult the Yellow Pages. Typically, distributors are listed under one of the following:

- Generators-Electric
- Engines-Gasoline
- Engines-Diesel
- Recreational Vehicles-Equipment
- Parts and Service

For outside North America:

- Call Cummins Power Generation at 1-763-574-5000, 7:30 AM to 4:00 PM Central Standard Time, Monday through Friday.

  OR

- Send a fax to Cummins Power Generation using the fax number, 1-763-574-5298.

When contacting your distributor, always supply the complete model, specification and serial number as shown on the generator set nameplate.

2.3 Model Identification

If the transfer switch ever needs to be serviced, the distributor will need this information in order to properly identify your unit from the many types manufactured:

- Model No. (Product Model)
- Serial No. (Product Serial Number)
- Spec. (Product Specification Letter)

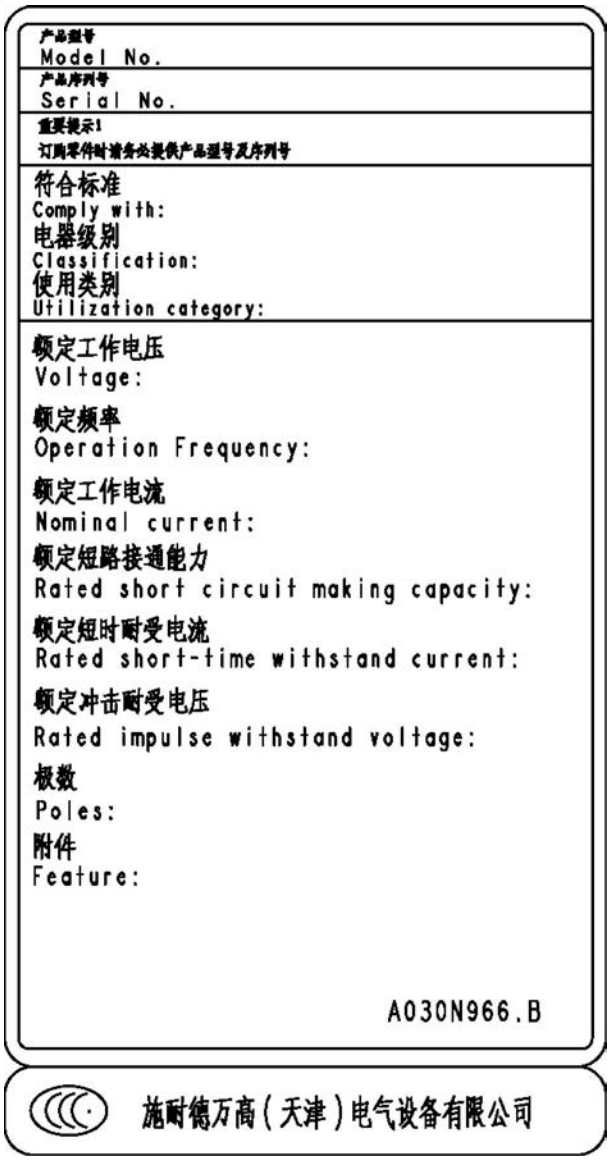

FIGURE 1. CONTROL NAMEPLATE

2.4 Transfer Switch Application

Transfer switches are an essential part of a building's standby or emergency power system. The utility line (normal power), is backed up by a generator set (emergency power). The transfer switch automatically switches the electrical load from one source to the other.

If utility power is interrupted, the load is transferred to the generator set (genset). When utility power returns, the load is retransferred to the utility. The transfer and retransfer of the load are the two most basic functions of a transfer switch.

2.5 Specifications

2.5.1 Model OTPC

Transfer Switch Model OTPC Specifications:

Model	Amps	Cabinet Types	Util-to-Gen (Level 1 & 2)	Gen-to-Gen (Level 2)	Util-to-Gen & Util-to-Util (Level 1 & 2)	Dual Standby	Plant-to-Plant (Prime Power)	Transfer Modes
OTPCA	40 70 125	**All Amps:** 4, 3R, 1, 12, 4x	X	X		X	X	OT PT
OTPCB	150 225 260	**150-225 Amp (3 & 4-Pole):** 1, 3R, 12, 4x **150-225 Amp (3 pole):** 4 **260 Amp (3 & 4-Pole):** 1, 3R, 12, 4x **260 Amp (3 pole):** 4	X	X		X	X	OT PT
OTPCC	300 400 600	**All Amps:** 1, 3R, 12, 4, 4x	X	X		X	X	OT PT
OTPCD	800 1000	**All Amps (3 & 4-Pole):** 1, 3R, 12, 4x **All Amps (3-Pole):** 4	X	X		X	X	OT PT
OTPCE	1000 1200	**All Amps:** 1, 3R, 12, 4, 4x	X	X	X	X	X	OT PT CT
OTPCF	1600	1, 3R, 12, 4	X	X	X	X	X	OT PT CT
OTPCG	2000	1, 3R, 12, 4	X	X	X	X	X	OT PT CT
OTPCH	3000	1, 3R	X	X	X	X	X	OT PT CT

OTPCJ	4000	1, 3R	X	X	X	X	X	OT PT CT

2.6 Automatic Transfer Switch Typical Function

Automatic transfer switches perform the basic function of transferring the load to the available power source. The controller monitors each source for allowable voltage and frequency range.

The transfer switch(es) identified on the cover of this manual are designed for each, all or a combination of the following applications (If you are unsure which of these your transfer switch uses, refer to the Specifications section of this manual):

2.6.1 Open Transition with Sync Check

Open transition with sync check executes an open transition (OT) transfer when both sources of power are within specified tolerances of frequency, voltage and relative phase difference. If both sources meet the tolerances, a fast transfer occurs.

2.6.2 Programmed Transition

Programmed transition executes a programmed transition (PT) transfer by disconnecting the load from the source of power, pausing in the neutral position of the transfer switch (between switched positions) to allow transient voltages from the load to diminish, and then the load is switched to the other source.

2.6.3 Closed Transition

Closed transition executes a load transfer by momentarily paralleling both sources (a maximum of 100ms) before switching sources.

2.7 Utility-to-Generator Set Operation

In utility-to-generator set applications, the transfer switch performs the following functions:

1. Senses the interruption of the Source 1 power (Utility).
2. Sends a start signal to the generator set (Source 2).
3. Transfers the load to the Source 2 power.
4. Senses the return of Source 1 (Utility).
5. Retransfers the load to Source 1.
6. Sends a stop signal to the generator set.

2.8 Utility-to-Utility Operation

In utility-to-utility applications, the transfer switch performs the following functions:

1. Senses the interruption of the Source 1 power (Utility).
2. Transfers the load to the Source 2.
3. Senses the return of Source 1 (Utility).

4. Retransfers the load to Source 1.

2.9 Generator-to-Generator Operation

In generator-to-generator applications, there are two possible configurations.

- Prime Power (Plant-to-Plant) Operation - Two generator sets provide all of the power (utility power is not available).
- Dual Standby - Two generator sets are used to back up utility power.

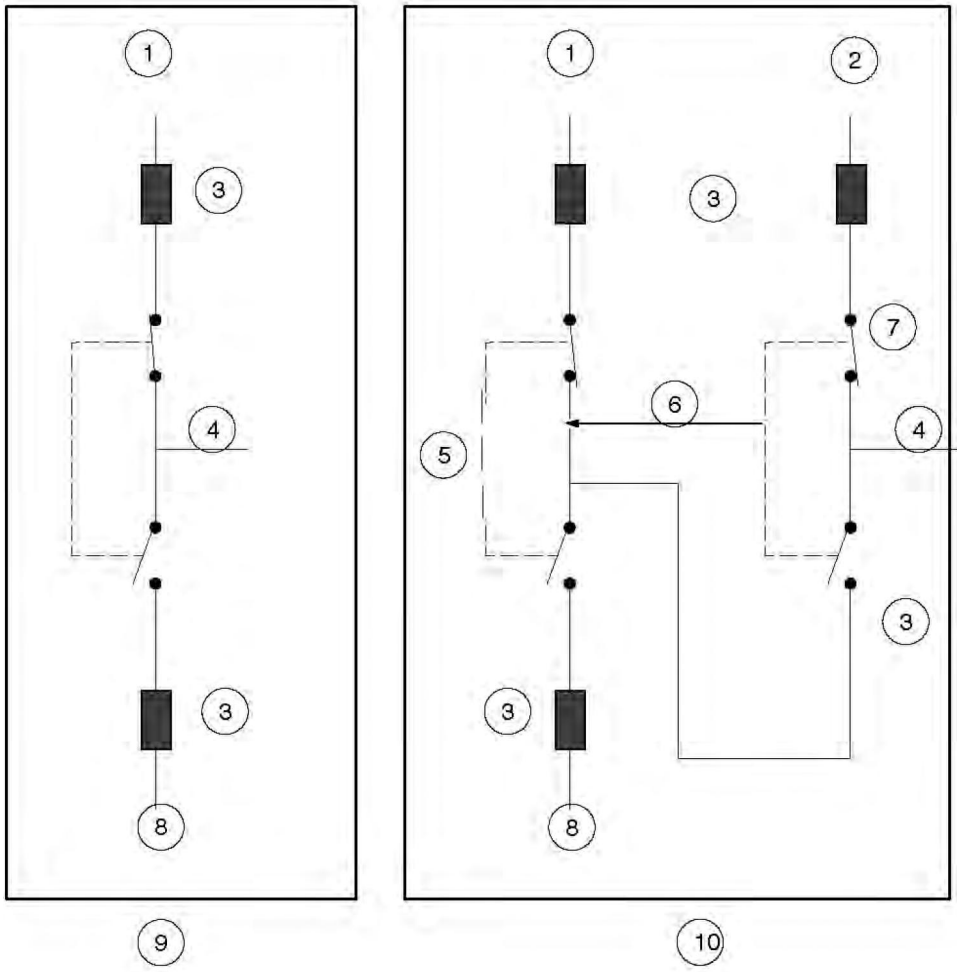

No.	Description	No.	Description
1	Generator set B	6	Standby start signal
2	Utility	7	Utility-to-Gen ATS
3	Over current protective device	8	Generator set A
4	Load	9	Gen-to-Gen configuration in Prime Power mode
5	Gen-to-Gen ATS	10	Gen-to-Gen configuration in Dual Standby mode

FIGURE 2. GENERATOR-TO-GENERATOR CONFIGURATION IN PRIME POWER AND DUAL STANDBY MODES

2.9.1 Prime Power (Plant-to-Plant) Operation

In prime power applications, utility power is not available. The system includes one transfer switch and two generator sets. One generator set is always running and supplying power to the load while the other generator set is the backup generator set. An external power supply is not needed in this application.

2.9.1.1 Preferred Source Selection

Under normal operation, one genset is designated as the preferred source and supplies power to the load. The second genset is the backup power source. If the preferred genset fails, the backup genset starts and the transfer switch transfers the load to the backup genset.

At any time, the PC service tool or the Test sub-menu can be used to designate either genset (Source 1 or Source 2) as the preferred genset. The Preferred Source menu is included in the Test submenus.

If the preferred genset is changed and the backup genset becomes the preferred genset, the transfer switch transfers the load to the new preferred genset when it becomes available. The unit that is carrying the load is always considered the preferred source.

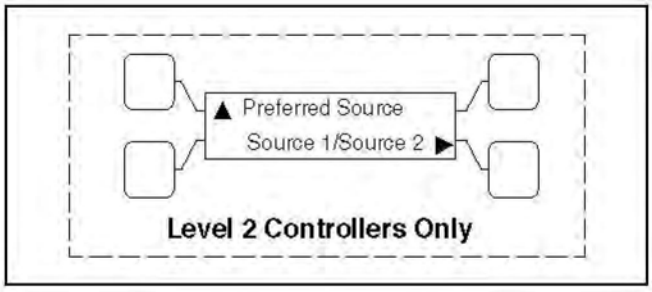

FIGURE 3. PREFERRED SOURCE SUBMENU

2.9.1.2 Automatic Changeover

The transfer switch can be set up to change the preferred source automatically by enabling the changeover timer. The Time Delay submenus under Setup or the PC service tool can be used to enable the changeover timer and specify a changeover delay time period. The Changeover menus are included in the Time Delay submenus.

The automatic changeover timer automatically changes the preferred source and transfers the load to the new preferred genset after a TDEN time delay. After the transfer is complete, the control initiates a cool-down period (TDEC) on the old preferred genset before shutting it down. The old preferred genset is now the new backup genset. The changeover timer is now timing for the next changeover and the cycle continues as long as the changeover timer is enabled.

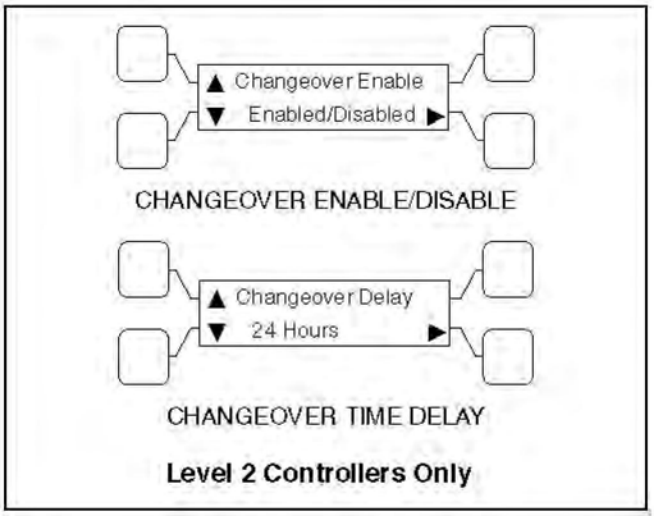

FIGURE 4. CHANGEOVER SUBMENUS

2.9.2 Dual Stand-By Operation

In dual stand-by applications, utility power is available. The system includes two transfer switches (a Utility-to-Generator ATS and a Generator-to-Generator ATS) and two generator sets. Utility power supplies power to the load and both generator sets are backup generator sets.

Under normal operation, the utility is supplying power to the load through the lead transfer switch. The lead transfer switch is a utility-to-generator set switch. The two generator sets are connected to the generator set-to-generator set transfer switch. The load side of this switch is connected to the generator set side of the lead transfer switch.

Upon loss of utility power to the lead transfer switch, a standby start signal is sent to the generator set-to-generator set transfer switch to start the preferred generator set. When the lead transfer switch senses generator voltage, it transfers the load to that generator set. If the preferred generator set fails to start, a signal is sent to the backup generator set to start. The PC Service tool or the Test sub-menu on the generator set-to-generator set transfer switch can be used to set the preferred source.

If the Stand-By Start is inactive, upon initial power–up (or reset), or during software initialization, the transfer switch control will not start either generator set. When a Stand-By Start command is received by the Generator-to-Generator ATS from a Utility-to-Generator ATS (or other device), the preferred generator set immediately starts. If the preferred generator set does not start, the control starts the backup generator set. The load is connected to the generator set when it becomes available.

If the preferred generator set becomes available while the backup generator set is active, a time delay re-transfer (TDEN) period is initiated and the load is re-transferred back to the preferred generator set. A time delay cool-down (TDEC) period is initiated before turning off the backup generator set. When the Stand-By Start becomes deactivated, a TDEC period is initiated and the active generator is turned off.

2.9.2.1 Preferred Source Selection

Under normal operation, one genset is designated as the preferred source and the second genset is designated as the backup power source. If both the utility power and the preferred genset fails, the backup genset starts and the genset-to-genset transfer switch transfers the load to the backup genset.

At any time, the PC service tool or the Test sub-menu on the genset-to-genset transfer switch can be used to designate either genset (Source 1 or Source 2) as the preferred genset. If the preferred genset is changed and the backup genset becomes the preferred genset, the transfer switch transfers the load to the new preferred genset if it is needed and when it becomes available.

2.9.2.2 Alternating Preferred Source

In an attempt to keep the running time equally distributed between both generator sets, the control can be set to alternate between the generator sets when utility power fails. The selected preferred generator set starts with the first power outage. The second power outage starts the backup generator set, which now becomes the preferred generator set. Upon subsequent outages, the preferred generator set alternates.

Only utility outages and tests or exercises initiated at the lead transfer switch result in the generator sets being alternated. The designated preferred generator set will not change if it fails and the backup generator set takes over the load. This alternating preferred source can only be enabled with the PC Service tool. When enabled, a generator set can be designated as the preferred source for a maximum of two weeks. Time adjustments can be made in one-hour increments with the Test submenu.

2.10 Control Level 1 and Level 2

Two controls are available. The type of power source switched and the desired features determine the control levels available.

The control board level can be viewed, using the digital display. This menu is included in the About submenus.

NOTICE
The digital display comes standard with level 2 controls and is optional with level 1 controls.

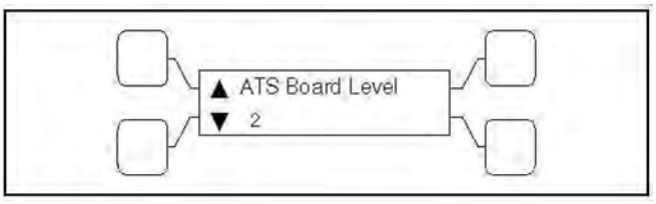

FIGURE 5. CONTROL LEVEL SUBMENU

3 Description

3.1 Cabinet

Cabinets are available in various configurations that meet UL and National Electrical Manufacturer's Association (NEMA) requirements. Each cabinet includes an identification label. The standard cabinet offerings are:

- Type 1 Indoor - general purpose
- Type 3R Outdoor - rainproof
- Type 4 Outdoor - watertight
- Type 4X Outdoor - watertight, stainless steel
- Type 12 Indoor - dust tight

3.2 Protective Relay

This section describes the solid state relays designed for use in single- or three-phase systems to protect equipment against overpower and/or under-power conditions.

To increase the level of protection in our closed transition switches we have included a lock out relay (86) that can trip from two different signals. It can trip from the K32R directional relay when it senses reverse power is exported to utility or when the 62PL parallel timer has detected that two sources have been connected for more than the predefined time (not the same as “Maximum Parallel Timer" in the digital board).

The 86 lockout relay trips when the internal 24VDC relay coil is energized, and it is always required to manual reset the relay. NC and NO dry contacts are provided for customer wiring which are rated for 20A 600V. Factory settings for the 62PL are 1 and 3 closed (ON), 2 and 4-10 open (OFF), for 500mS delay.

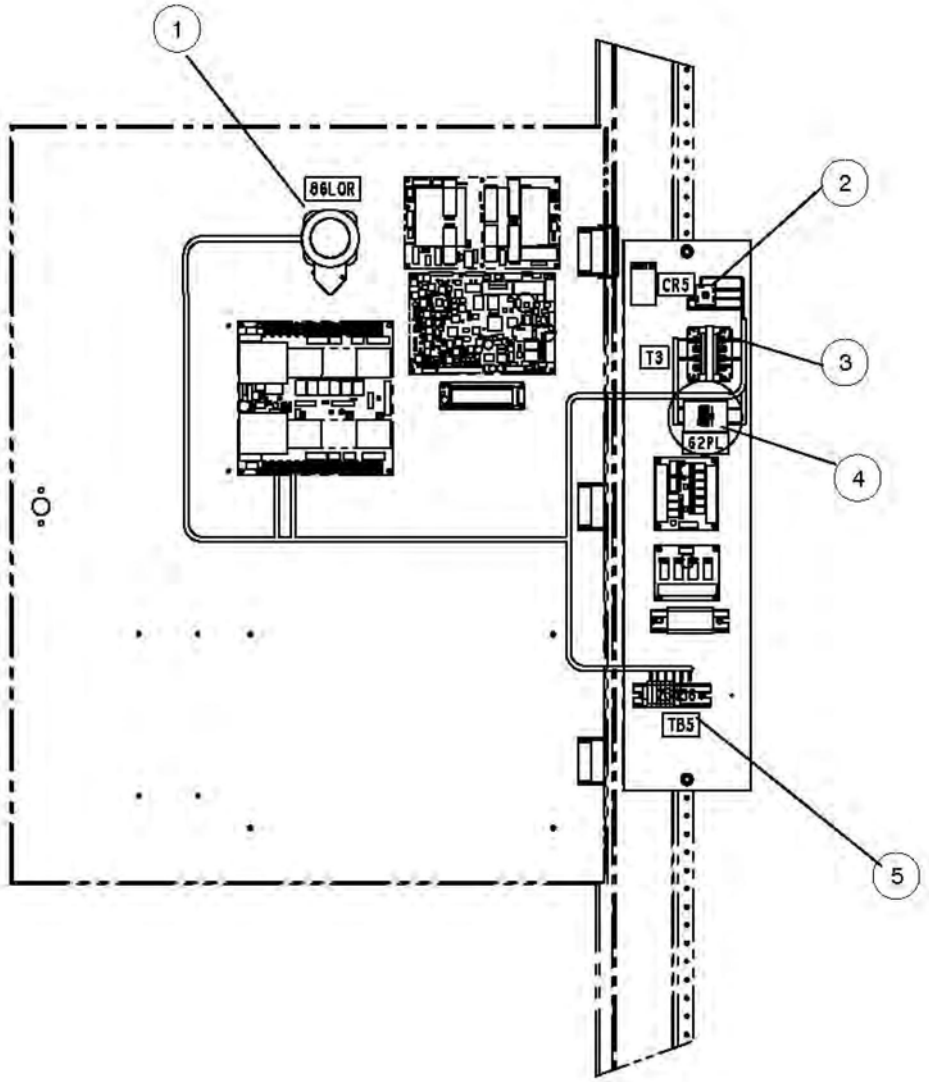

No.	Description	No.	Description
1	Lockout relay	2	Rectifier
3	Transformer	4	Relay
5	Terminal blocks		

FIGURE 6. RELAY INSTALLATION M036/M038

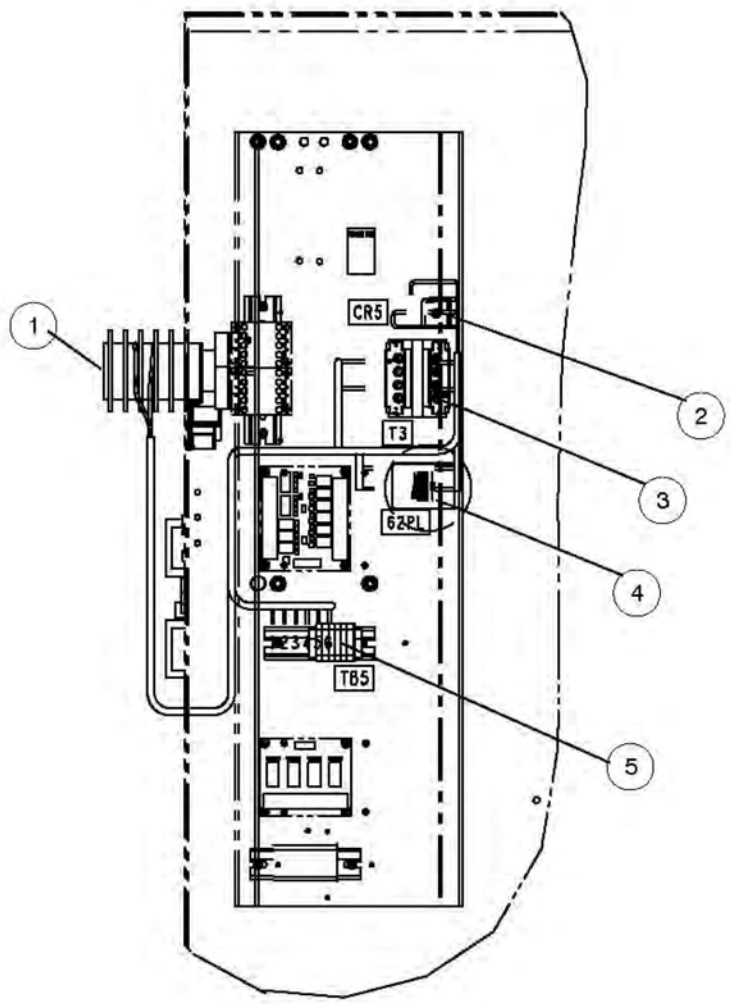

No.	Description	No.	Description
1	Lockout relay	2	Rectifier
3	Transformer	4	Relay
5	Terminal Blocks		

FIGURE 7. RELAY INSTALLATION M036/M038

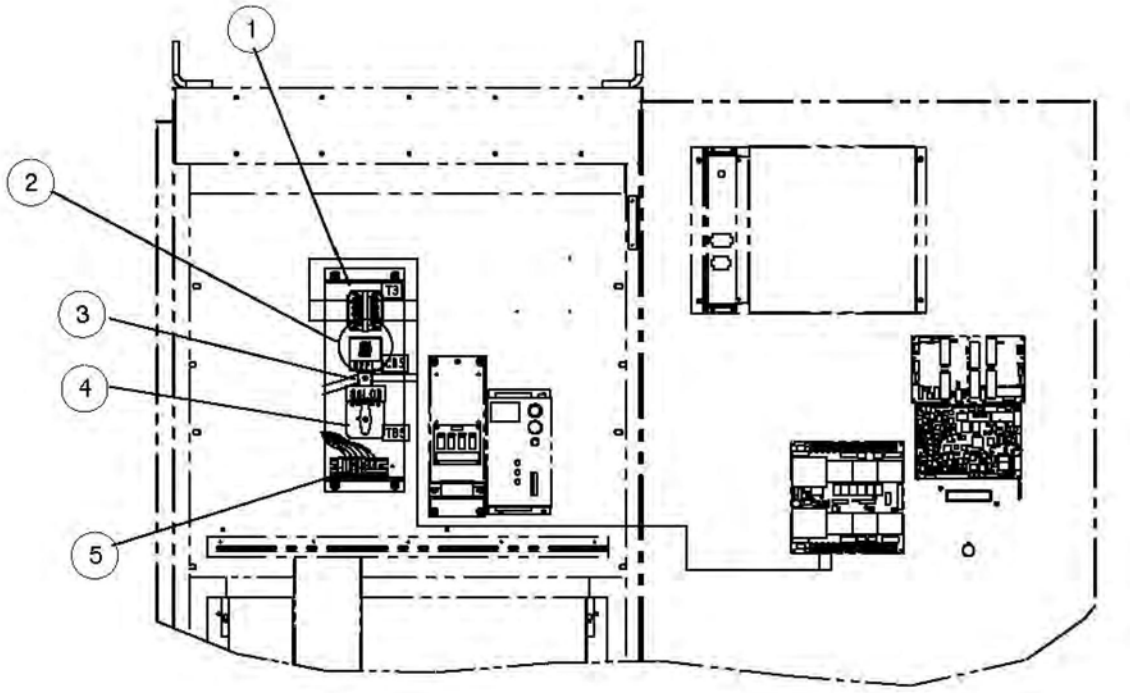

No.	Description	No.	Description
1	Transformer	2	Relay
3	Rectifier	4	Lockout relay
5	Terminal blocks		

FIGURE 8. RELAY INSTALLATION M036/M038

3.3 Transfer Switch Components

The transfer switch opens and closes the contacts that transfer the load between the power sources (Source 1 and Source 2). The switch is mechanically interlocked to prevent simultaneous closing to both power sources (except in switches capable of closed transitions).

3.3.1 Contact Assemblies

The automatic transfer switch has either three or four poles. Three pole transfer switches are provided with a neutral bar. The contact assemblies make and break the current flow. When closed to either power source the contacts are mechanically held. A mechanical interlock prevents them from closing to both power sources at the same time.

3.3.2 Linear Actuator

The linear actuator moves the contact assemblies between the contacts of both power sources. Linear actuator operation is initiated automatically by the transfer switch control. Manual operation of the switch is also possible.

3.3.3 Motor Disconnect Switch (150-1000 Amp Switches)

Moving the Draw out lever to the Release position disables the linear actuator. The Not In Auto indicator on the front panel will light and the display indicates a motor disconnect event.

3.3.4 Motor Disconnect Switch (1200-4000 Amp Switches)

The Motor Disconnect toggle switch on the accessory control plate enables and disables the linear actuator.

- Placing the switch in the AUTO position enables the linear actuator.
- Placing the switch in the OFF position disables the linear actuator. When placed in the OFF position, the Not In Auto indicator on the front panel will light and the display indicates a motor disconnect event.

3.3.5 Auxiliary Contacts

Auxiliary contacts are provided on the utility and genset sides of the transfer switch. They are actuated by operation of the transfer switch during transfer and retransfer. The utility auxiliary contact switch is actuated when the transfer switch is connected to the utility. The genset auxiliary contact switch is actuated when the transfer switch is connected to the genset. The auxiliary contacts have current ratings of 10 amperes at 250 VAC. The contacts are wired to terminal block TB1.

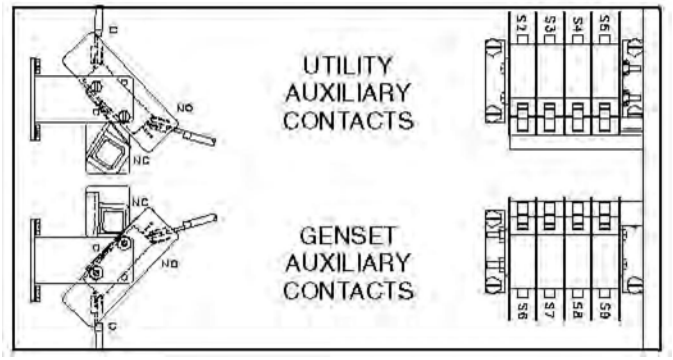

FIGURE 9. AUXILIARY CONTACTS

3.4 Electronic Control System

This section describes the standard and optional components of the electronic control system.

⚠ WARNING

Improper calibration or adjustment of electronic control modules can cause death, severe personal injury, and equipment or property damage. Calibration and adjustment of these components must be performed by technically qualified personnel only.

For further information regarding installation, calibration and adjustment of these components, refer to the:

- Installation Manual (shipped with the product)
- Service Manual (available through your distributor)

⚠ WARNING

Accidental actuation of the linear motor could cause severe personal injury. Before making any adjustments, place the Motor Disconnect Switch in the OFF position. Return the switch to the Auto position after adjustments are completed.

⚠ WARNING

AC power within the cabinet and the rear side of the cabinet door presents a shock hazard that can cause severe personal injury or death. When the cabinet door is open, use extreme caution to avoid touching electrical contacts with body, tools, jewelry, clothes, hair, etc.

3.4.1 Time Delays

3.4.1.1 Time Delay Engine Start (TDES-A and TDES-B)

Time Delay Default: 3 seconds (for both TDES-A and TDES-B)

Adjustable: The value is set with the InPower service tool or the digital display.

- Adjustable from 0-15 seconds in 1 second increments on Level 1 controls.
- Adjustable from 0-120 seconds on Level 2 controls.
  - Values up to 20 seconds are adjustable in 1 second increments.
  - Values over 20 seconds are adjustable in 5 second increments.

Purpose: Prevents the generator set from starting during short power interruptions.

Sequence of Events: Timing begins at the Source 1 power interruption (or the preferred source interruption on gen-to-gen units). If the duration of interruption exceeds the delay time, the control system starts the generator.

NOTICE

For long engine start time delays (over 15 seconds) a remote battery source must be used.

For **Genset-to-Genset** applications: TDES-A is the start time delay to start the Source 2 genset and TDES-B is the start time delay to start the Source 1 genset.

For **Utility-to-Utility** applications: TDES-A and TDES-B are not available.

3.4.1.2 Time Delay Engine Cool-down (TDEC-A and TDEC-B)

Time Delay Default: 10 minutes

Adjustable: Adjustable from 0-30 minutes, in 1 minute increments. The value is set with the InPower service tool or the digital display.

Purpose: Allows the generator set to cool without load before stopping.

Sequence of Events: Timing begins when the load is retransferred to Source 1 (or to the preferred source on gen-to-gen units). At the end of the delay, the stop signal is sent to the generator set. During this time delay, the generator set cools down without load before stopping.

For **Genset-to-Genset** applications: TDEC-A is the stop time delay to stop Source 2 genset and TDEC-B is the stop time delay to stop Source 1 genset.

For **Utility-to-Utility** applications: TDEC-A and TDEC-B are not available.

3.4.1.3 Time Delay Normal to Emergency (TDNE)

Time Delay Default: 5 seconds

Adjustable: Adjustable from 0-120 seconds, in 1 second increments. The value is set with the InPower service tool or the digital display.

Purpose: Allows the generator set to stabilize before the load is applied.

Sequence of Events: Timing begins when:

- Source 2 voltage and frequency reaches the settings of the control.
- Preferred source voltage (on gen-to-gen units) and frequency reaches the settings of the control.
- Preferred utility becomes available (on utility-to-utility units).

After the delay, the transfer switch transfers the load to Source 2.

3.4.1.4 Time Delay Emergency to Normal (TDEN)

Time Delay Default: 10 minutes

Adjustable: Configurable for 0 (disabled), 0.1, 5, 10, 15, 20, 25 or 30 minutes.

Purpose: Allows utility power to stabilize before retransfer. This delay also allows the generator to operate under load for a minimum amount of time before transferring back to utility power.

Sequence of Events: Timing begins with the transfer switch connected to the generator and after the utility becomes available following an outage (the green Utility Power Available LED is lit). This time delay also starts when an active test or exercise period has ended. After the delay, the transfer switch can retransfer the load to the utility power source.

- If the utility fails any time during this time delay, the control resets the timer and restarts it once utility power becomes available.
- If the generator fails at any time during this time delay, the timer expires and the normal retransfer sequence takes place.
- If the Override pushbutton is pressed or the Override input is grounded while the TDEN timer is active, the TDEN timer immediately expires.
- The TDEN timer will not begin if a Retransfer Inhibit input is active.

3.4.1.5 Time Delay Elevator (TDEL)

Time Delay Default:0 seconds

Adjustable: Adjustable from 0-60 seconds, in 1 second increments. The value is set with the InPower service tool or the digital display.

Purpose: Allows an elevator to come to a complete stop before the switch transfers.

Sequence of Events: Timing begins after the transfer or retransfer timing ends. TDEL only times when transferring between two live sources.

3.4.1.6 Time Delay Programmed Transition (TDPT)

Time Delay Default:0 seconds

Adjustable: Configurable for 0 (disabled), 0.5, 1, 2, 3, 4, 6 or 10 seconds.

Purpose: Allows the transfer switch to pause in the Neutral position for an adjustable period of time whenever there is a transfer from one source to another.

- This intentional delay allows the residual voltage of an inductive load to sufficiently decay before connecting it to another power source.
- This delay prevents potentially damaging voltage and current transients in the customer's power system.

Sequence of Events: Timing begins whenever the transfer switch has disconnected from one source and is in the Neutral position.

- If TDPT is set to zero, then the transfer switch transfers from one source to the other with no neutral position delay.
- The control also detects if the transfer switch has disconnected from the first source before connecting it to the second one.
- If there is a power source failure while the TDPT is active, the control only transfers to the remaining active power source.
- The control does not terminate the TDPT timer if either source fails while the transfer switch is in the Neutral position.

3.4.2 System Sensors

3.4.2.1 Under-Voltage Sensing

All controls include under-voltage sensors for Source 1 and Source 2.

Default Value:

- Pick-up: 90%
- Drop-out: 90% of the pick-up setting

Range:

- The pick-up range for a rising voltage is 85 to 100% of the nominal voltage set point.
- The under-voltage sensing range for a falling voltage (drop-out) is 75 to 98% of the pick-up voltage setting.

Default Delay Time: 0.5 second

Adjustable: The adjustable range for the time delay period is 0.1 to 1.0 seconds in 0.1 second increments. These values are set with the PC service tool or the digital display.

Sequence of Events:

- When a sensor detects a voltage below the set drop-out voltage for a period longer than the time delay, it deems the voltage as unacceptable.
- When the sensor detects a voltage at or above the set pick-up point, it deems the voltage as acceptable.

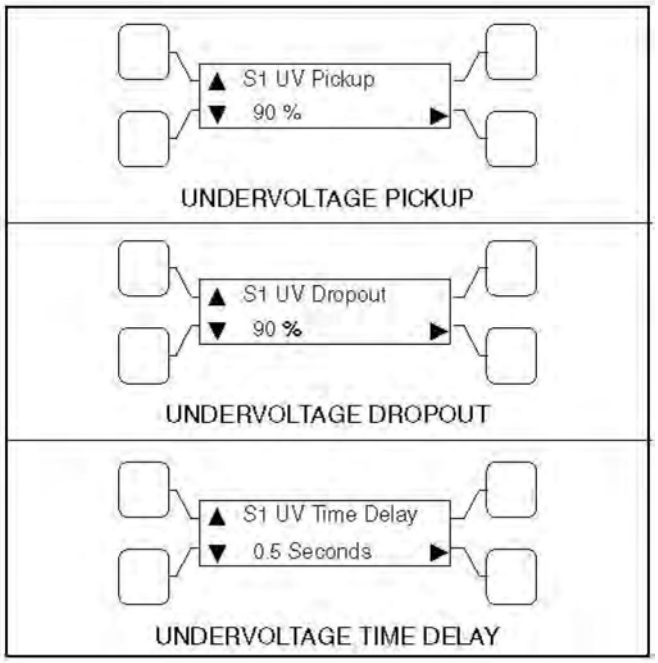

FIGURE 10. UNDER-VOLTAGE SENSING SUBMENUS

3.4.2.2 Over-Voltage Sensing

All controls include over-voltage sensors for Source 1 and Source 2 that can be disabled and not used. The over-voltage sensing feature is enabled by default.

Default Value:

- Over-voltage (drop-out) sensing range: 110%
- Pick-up range: 95%

Range:

- The over-voltage sensing range (drop-out) for a rising voltage is 105 to 135% of the nominal voltage set point.
- The pick-up range for a falling voltage is 95 to 99% of the drop-out setting.

Default Delay Time: 3.0 seconds

Adjustable: The adjustable range for the delay time period is 0.5 to 120.0 seconds in 1 second intervals. These values are set with the PC service tool or the digital display.

Sequence of Events:

- When a sensor detects a voltage above the set dropout voltage for a period longer than the time delay, it deems the voltage as unacceptable.
- When the sensor detects a voltage at or below the set pickup point, it deems the voltage as acceptable.

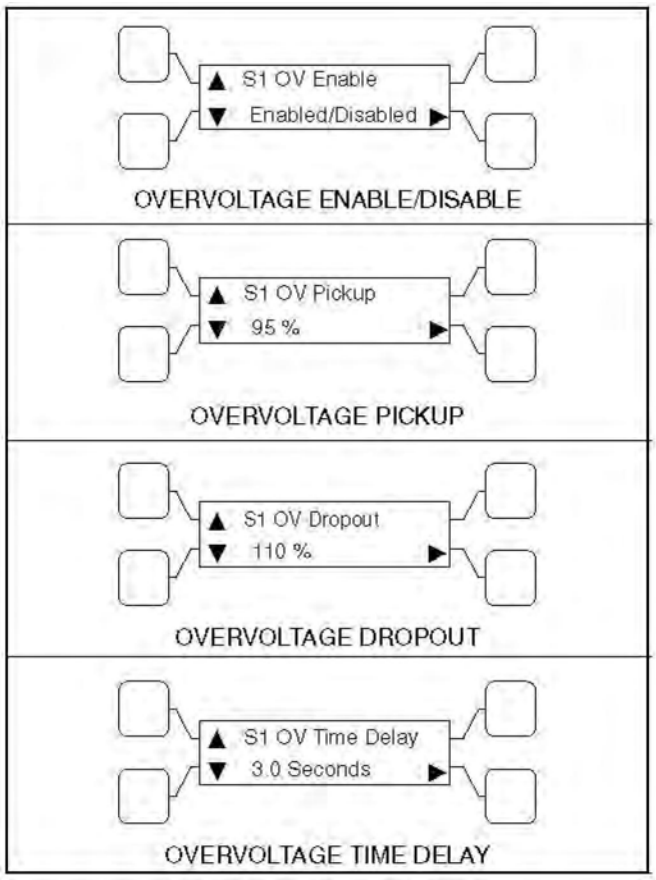

FIGURE 11. OVER-VOLTAGE SENSING SUBMENUS

3.4.2.3 Frequency Sensing

All controls include frequency sensors for Source 1 and Source 2 that can be disabled and not used.

Default Value:

- Nominal frequency: 60 Hz
- Frequency pick-up bandwidth: ±10%
- Frequency drop-out: 1% beyond pick-up bandwidth setting

Range:

- The nominal frequency can be set between 45.0 and 60.0 Hz in 0.1 Hz increments.
- The acceptable frequency bandwidth (pick-up) is ±5 to ±20% of the nominal frequency set point.
- The drop-out frequency is 1 to 5% beyond the pick-up.

The frequency sensing feature is enabled by default.

Default Delay Time: 1.0 second

Adjustable: The adjustable range for the time delay period is 0.1 to 15 seconds.

Sequence of Events:

- When a sensor detects a frequency outside the dropout bandwidth for a period longer than the time delay, it deems the frequency as unacceptable.
- When the sensor detects a frequency within the pickup bandwidth, it deems the frequency as acceptable.

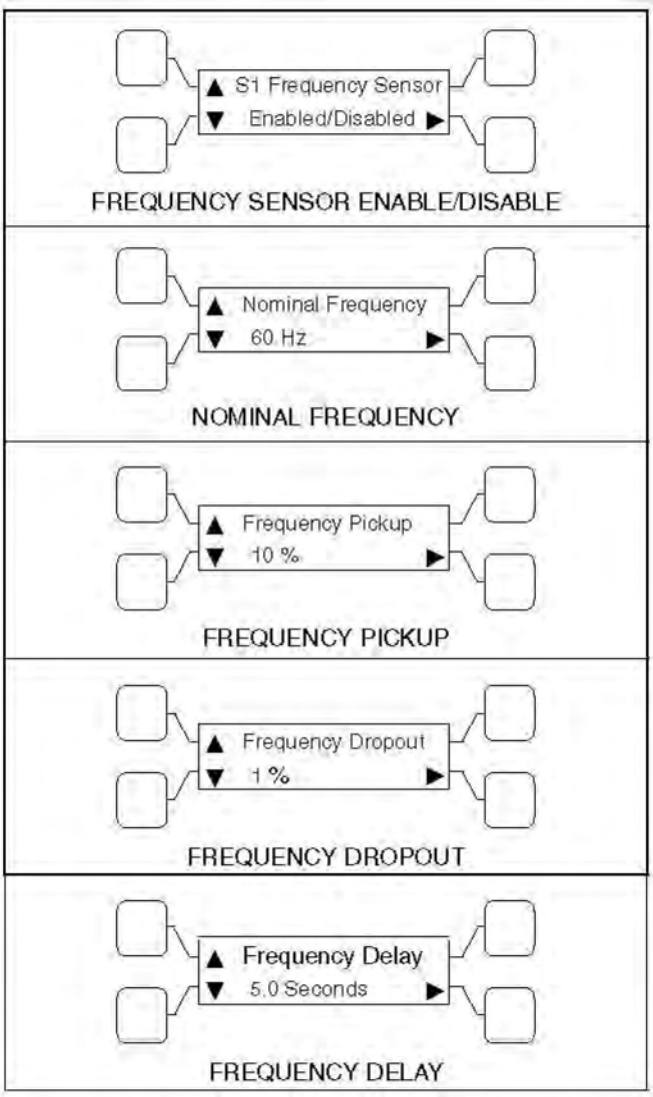

FIGURE 12. FREQUENCY SUBMENUS

3.4.2.4 Voltage Imbalance Sensing

Three phase Level 2 controllers include a voltage imbalance sensor for both Source 1 and Source 2. This feature informs the operator when there is significant voltage imbalance between the phases of Source 1 or Source 2. This feature is used for equipment protection.

NOTICE
This sensor is inactive for single phase systems and indicates no failures. To prevent nuisance faults, the setting can be increased up to 10% of the nominal voltage.

This sensor can be enabled using the PC service tool or the digital display Setup submenus.

Default Value: 10%

Range:

- The maximum deviation from the average voltage is greater than a user-specified value between 2 and 10% (dropout) of the average voltage in 1% increments.
- The pickup value is fixed at 10% of the dropout.

Default Delay Time: 10 seconds

Adjustable: The adjustable range for the time delay period for the imbalance sensor drop-out is 2 to 20 seconds.

Sequence of Events: A voltage imbalance is typically caused by severe single phase loading. The sensor indicates a failure when the maximum deviation from the average voltage is greater than a user-specified value (dropout) of the average voltage.

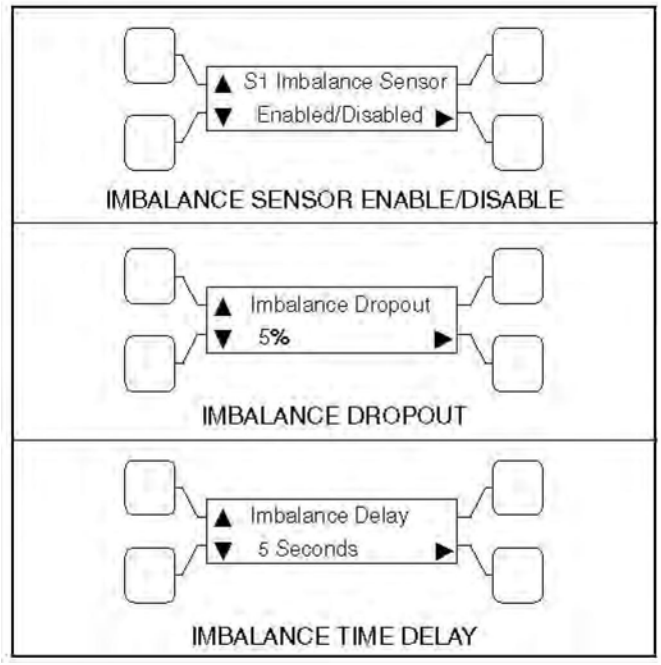

FIGURE 13. VOLTANGE IMBALANCE SENSOR SUBMENUS

3.4.2.5 Phase Rotation Sensing

Three phase Level 2 controllers include a phase rotation sensor.

This feature monitors the phase rotation of the source opposite from the connected source. Both voltage sources must be applied in order to check phase rotation.

This feature protects against equipment damage by preventing transfer to a source that is out of phase. This generally occurs on new installations or after storm damage or generator rewiring. This feature is required in fire pump applications.

⚠ CAUTION

Level 1 controls do not support three-phase sensing on Source 2. Do not select the three-phase option for the Source 2 Sensing adjustment with Level 1 controls, even if the system is three phase. This setting will prevent Source 2 from becoming available.

Default Value: Disabled

Adjustable: The adjustable range for phase rotation sensing is Enabled or Disabled (On or Off).

Sequence of Events: When the alternate source is out of phase rotation with the connected source, transfer is inhibited.

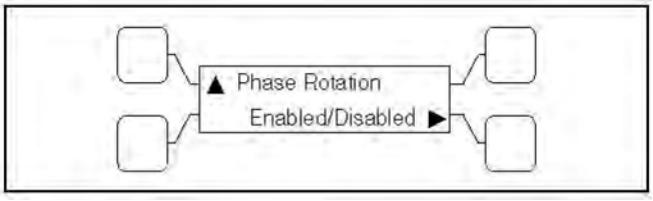

FIGURE 14. PHASE ROTATION SENSING SUBMENU

3.4.2.6 Loss of Single Phase Sensing

Three phase Level 2 controllers include a loss of single phase sensor.

NOTICE
This sensor is inactive for single phase systems and indicates no failures.

This feature initiates a transfer from a source that has lost a single phase and prevents a transfer to a source that has lost a single phase. This is generally caused by a single phase to line ground or open.

This feature is mainly used to protect three phase devices, such as motors.

Default Value: Disabled

Adjustable: The adjustable range for loss of single phase sensing is Enabled or Disabled (On or Off).

Sequence of Events: The controller indicates a fault when the relative phase angle between any line-to-line phase angle drops to less than 90 degrees.

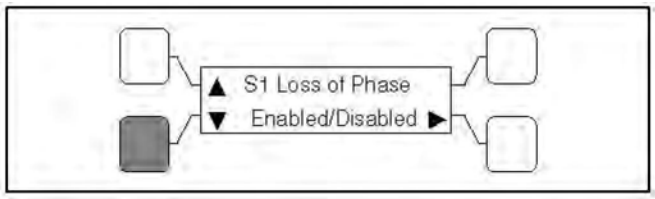

FIGURE 15. LOSS OF PHASE SENSING SUBMENU

3.4.2.7 Transfer Times

The controller senses and records the time it takes for the transfer switch to break from one source and reconnect to the other source.

NOTICE
Transfer times are not recorded if Programmed Transition delay is in use.

3.4.3 Transfer Modes

A transfer mode can be selected from the front panel digital display.

Since not all automatic transfer switches are configured the same, some may not have access to all transition mode types. The transfer modes available on your transfer switch are identified in the following section.

The transfer switch mode setting can be changed with the PC service tool or with the digital display.

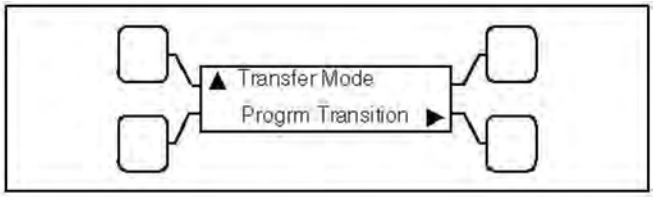

FIGURE 16. TRANSFER MODE SUBMENU

3.4.3.1 Available Transfer Modes

- Open Transition (OT) with Sync Check
- Programmed Transition (PT)
- Closed Transition (CT)

3.4.3.2 Open Transition with Sync Check

Open transition with sync check executes an open transition (OT) transfer when both sources of power are within specified tolerances of frequency, voltage and relative phase difference. If both sources meet the tolerances, a fast transfer occurs.

3.4.3.2.1 Transfer from Source 1 to Source 2 (OT)

This sequence begins with Source 1 supplying power to the load. The Source 1 Available and Source 1 Connected indicators are lit. The sequence ends with Source 2 (generator) assuming the load.

1. When Source 1 goes “out of spec," the control starts a Time Delay to Engine Start (TDES) timer and the Source 1 Available indicator goes out.
2. If the TDES expires without a return to acceptable Source 1 power, the genset receives a remote start signal. The engine starts and accelerates to rated speed.
3. When the alternator output reaches the “pickup" level, the Source 2 Available indicator is lit. The control starts the Time Delay Normal to Emergency (TDNE) timer.

3.4.3.2.2 Transfer from Source 2 to Source 1 (OT)

This sequence begins with Source 2 supplying power to the load. The Source 2 Available and Source 2 Connected indicators are lit. The sequence ends with Source 1 (utility) assuming the load.

1. When Source 1 returns to “in spec," the Source 1 Available indicator is lit and the control starts the Time Delay Emergency to Normal (TDEN) timer. When this time is complete, the controller starts monitoring both live sources looking for when they are in sync

2. When both sources are in sync, the switch transfers the load to Source 1. However, if the two sources fail to synchronize and the “Return PT Enabled" feature is active, the switch executes a programmed transition by stopping in the Neutral position and transferring the load to Source 1. If Source 2 goes offline while the controller is trying to synchronize the two sources, the controller executes a Programmed Transition and transfers the load to Source 1.
3. A Time Delay Engine Cool-down (TDEC) for the genset is activated. When the engine cool-down delay expires, the genset shuts down and the Source 2 Available indicator goes out.

3.4.3.2.3 Return PT Enable

A feature included with controls that have a Sync Check sensor is Return to Programmed Transition.

Adjustable: This feature can be enabled and disabled with the PC service tool or with the digital display, if available.

Sequence of Events: If the two sources fail to synchronize within two minutes, a Failed to Synchronize event occurs. If the Return to Programmed Transition feature is enabled, the control reverts to transferring the transfer switch to the programmed transition mode.

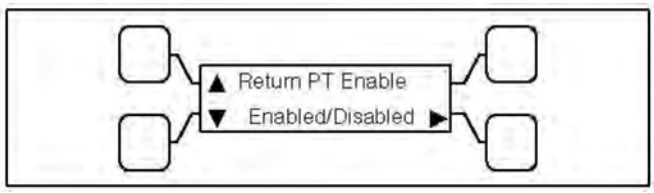

FIGURE 17. RETURN TO PROGRAMMED TRANSITION SUBMENU

3.4.3.2.4 Sync Check Sensor

Sync Check is used to determine when both sources of power are within specified tolerances of frequency, voltage, and relative phase difference. If both sources are within this range, a fast or synchronized transfer occurs.

The transfer switch controller measures non-programmed transition transfer times from one source to another. It takes into account relay coils and solenoids energizing.

Default Value:

- Frequency bandwidth: 1.0 Hz
- Voltage: 10 V
- Offset: 0 milliseconds

Range:

- The frequency bandwidth range is from 0.1 and 1.0 Hz.
    - The frequency difference between the sources must be equal to or less than the set value in order for transfer to occur.
- The voltage window is from 5 and 25 volts.
    - The average voltage difference between the two sources must be equal to or less than the set value in order for transfer to occur.
- The manual offset range is from -25 to +25 milliseconds.

Adjustable: Synchronicity parameters are adjustable. The transfer switch mode setting can be changed with the PC service tool or with the digital display, if available.

Sequence of Events: If enabled, the Sync Check sensor overrides programmed transition whenever transferring between two live sources. If only one power source is available, programmed transition overrides the Sync Check sensor.

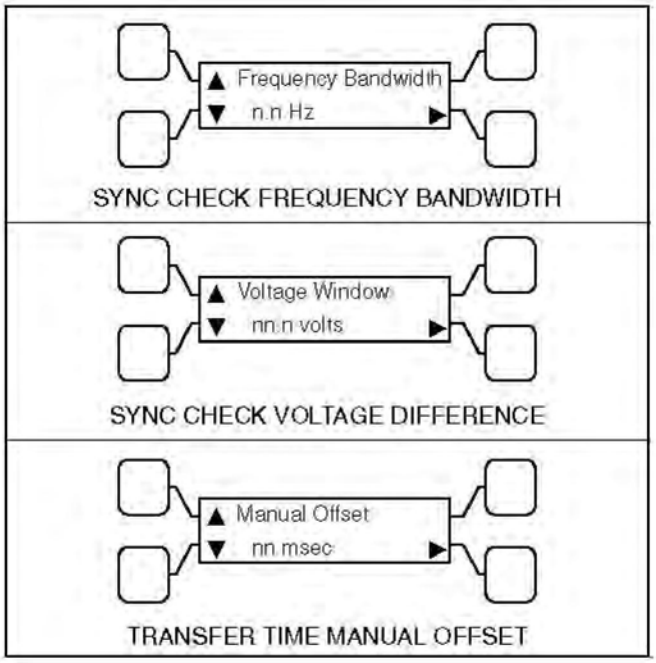

FIGURE 18. SYNCHRONICITY PARAMETER SUBMENUS

3.4.3.2.5 Active Sync Feature

When the transfer switch is configured to transfer in closed transition mode it is recommended to use the active sync feature. When the active sync feature is enabled,

the transfer switch control can send a Sync Enable command to the genset to synchronize with the utility. This command is activated just before the Sync Check sensor is activated.

To use the Active Sync feature, it must first be enabled. The Active Sync feature can be enabled with the PC service tool or the digital display, if available.

NOTICE
The active sync feature may be used with a non-paralleling genset control as well as a paralleling control. A non-paralleling genset control will not synchronize the genset to the utility but enabling the active sync feature will impose the active sync time delay so that the two source must remain synchronized for the set time period maximizing the reliability of the transfer. When using a non-paralleling genset with this feature it is recommended to set the generator set frequency to 0.1 Hz higher than the utility to make sure that the generator set will come into sync with the utility.

Default Value: 0.5 seconds

Range: The Active Sync Time Delay is adjustable from 0 to 5 seconds in 0.1 second increments.

Default Delay Time:

Adjustable: The Active Sync Delay timer can be set with the PC service tool or the digital display.

Sequence of Events: When the Active Sync feature is enabled, the control runs an Active Sync Time Delay (if greater than 0) and sends the Sync Enable command to the genset. The Active Sync Time Delay is used to check the stability of the system before transferring to the other source. The two sources must remain synchronized for this period of time period before a transfer command is given.

When a paralleling genset control receives a Sync Enable command and detects the Source 1 bus voltages, the genset control automatically synchronizes its speed and phase to match the Source 1 bus. The Sync Check sensor monitors both sources. When they are synchronized, a transfer or retransfer command is initiated.

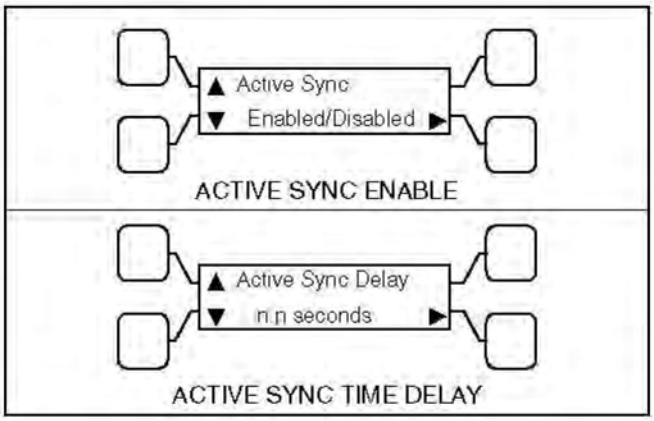

FIGURE 19. ACTIVE SYNC SUBMENUS

3.4.3.2.6 Speed Adjust

If a PowerCommand transfer switch and a non-paralleling genset are networked together, the transfer switch control can send a Speed Adjust command to the genset to increase its speed just enough to increase its frequency by 0.5 Hz.

NOTICE
The genset must be capable of reacting to a Speed Adjust command. This feature is only available if a PowerCommand network is installed.

Default Value: Speed Adjust is always enabled unless Active Sync is enabled.

Sequence of Events: The command is activated just before the Sync Check sensor is activated. It is used when the genset takes a long time to drift in sync with the utility. This increases the number of “in-phase" opportunities to satisfy the Sync Check sensor.

3.4.3.3 Programmed Transition

Programmed transition executes a programmed transition (PT) transfer by disconnecting the load from the source of power, pausing in the neutral position of the transfer switch (between switched positions) to allow transient voltages from the load to diminish, and then the load is switched to the other source.

3.4.3.3.1 Transfer from Source 1 to Source 2 (PT)

This sequence includes a programmed transition and begins with Source 1 supplying power to the load. The Source 1 Available and Source 1 Connected indicators are lit. The sequence ends with Source 2 (generator) assuming the load.

1. When source 1 goes “out of spec," the control starts a Time Delay Engine Start (TDES) timer and the Source 1 Available indicator goes out.
2. If the TDES expires without a return to acceptable Source 1 power, the genset receives a remote start signal. The engine starts and accelerates to rated speed.
3. When the alternator output reaches the “pickup" level, the Source 2 Available indicator lights. The transfer switch starts the Time Delay Normal to Emergency (TDNE) timer. When this time is complete, the switch moves to the Neutral position. The Source 1 Connected indicator goes out.
4. The transfer switch stops in the Neutral position for the Time Delay Programmed Transition (TDPT) and then completes its transition to the Source 2 position. The Source 2 Connected indicator lights.

3.4.3.3.2 Transfer from Source 2 to Source 1 (PT)

This sequence begins with Source 2 supplying power to the load. The Source 2 Available and Source 2 Connected indicators are lit. The sequence ends with Source 1 (utility) assuming the load.

1. When Source 1 returns to “in spec," the Source 1 Available indicator lights and the digital board starts the Time Delay Emergency to Normal (TDEN) timer. When this time is complete, the switch moves to the neutral position (the Source 2 indicator goes out).
2. If there is a programmed transition delay, the transfer switch stops in the Neutral position for the Time Delay Programmed Transition (TDPT) and then completes its transition to the Source 1 position. The Source 1 Connected indicator lights and the Time Delay Engine Cooldown (TDEC) timer starts.
3. When the engine cool-down delay expires, the genset shuts down and the Source 2 Available indicator goes out.

3.4.3.4 Closed Transition

Closed transition executes a load transfer by momentarily paralleling both sources (a maximum of 100ms) before switching sources.

3.4.3.4.1 Transfer from Source 1 to Source 2 (CT)

This sequence begins with Source 1 supplying power to the load. The Source 1 Available and Source 1 Connected indicators are lit. The sequence ends with Source 2 (generator) assuming the load.

1. When Source 1 goes “out of spec," the digital board starts a Time Delay to Engine Start (TDES) timer and the Source 1 Available indicator goes out.
2. If the TDES expires without a return to acceptable Source 1 power, the genset receives a remote start signal, the engine starts and accelerates to rated speed.
3. When the alternator output reaches the “pickup" level, the Source 2 Available indicator is lit. The transfer switch starts the Time Delay Normal to Emergency (TDNE) timer. When this time is complete, the switch moves to the Neutral position. The Source 1 Connected indicator goes out.

4. If there is a programmed transition delay, the transfer switch stops in the Neutral position for the Time Delay Programmed Transition (TDPT) and then completes its transition to the Source 2 position. The Source 2 Connected indicator is lit.

3.4.3.4.2 Transfer from Source 2 to Source 1 (CT)

This sequence begins with Source 2 supplying power to the load. The Source 2 Available and Source 2 Connected indicators are lit. The sequence ends with Source 1 (utility) assuming the load.

1. When Source 1 returns to “in spec," the Source 1 Available indicator is lit and the digital board starts the Time Delay Emergency to Normal (TDEN) timer. When this time is complete, the controller starts monitoring both live sources until they are in phase.
2. When they are in phase, the controller closes the Source 1 contact and allows Source 1 and Source 2 to simultaneously feed the load for a maximum of 100ms.
3. After the 100ms timer expires, the controller opens the Source 2 contacts.
4. A Time Delay Engine Cool-down (TDEC) for the genset is activated. When the engine cool-down delay expires, the genset shuts down and the Source 2 Available indicator goes out.

3.4.4 Front Panel Test - Sequence of Events

If the test button is pushed on the Front Panel, then the controller simulates a Source 1 or Utility failure and proceeds to transfer the load to the generator.

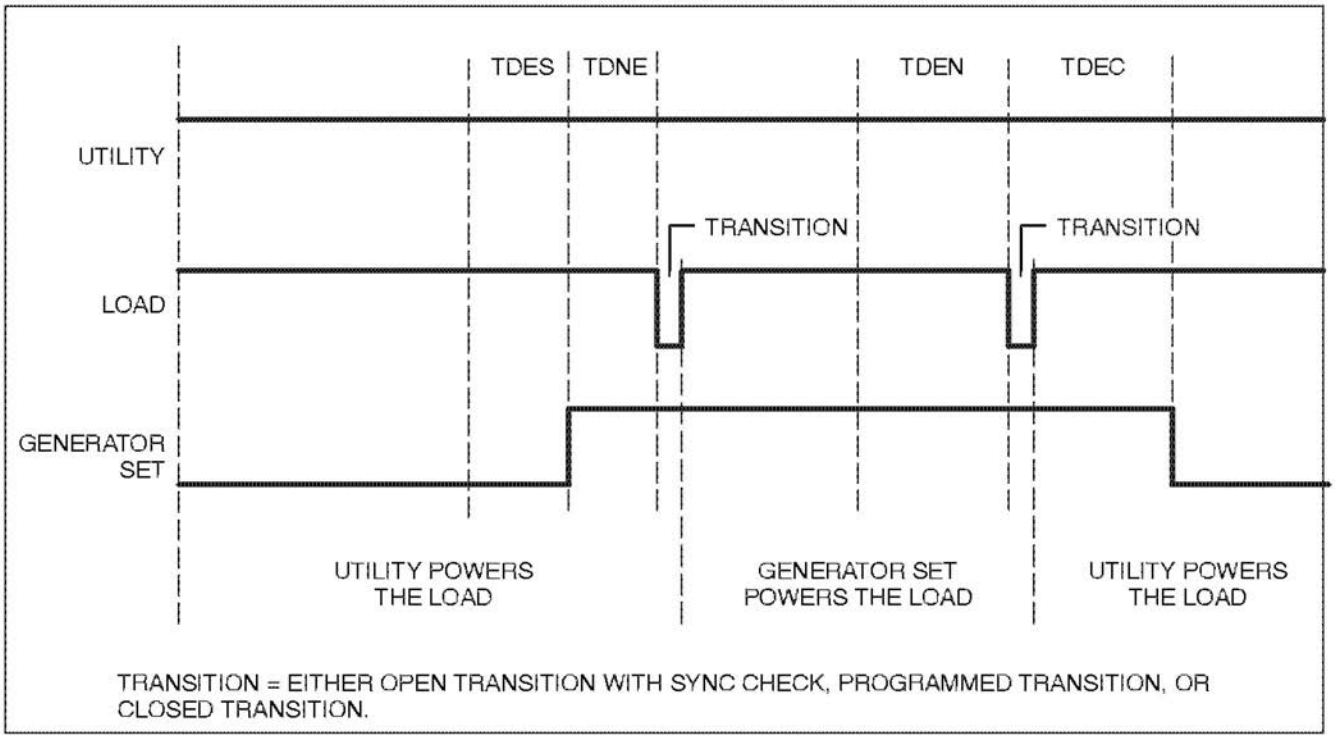

FIGURE 20. FRONT PANEL TEST SEQUENCE OF OPERATION

3.4.4.1 Transfer from Source 1 to Source 2 (Front Panel Test)

This sequence begins with Source 1 supplying power to the load continuously. The Source 1 Available and Source 1 Connected indicators are lit. The sequence ends with Source 2 (generator) assuming the load.

1. When the operator holds the Test button on the front panel for at least two seconds, the digital board starts a Time Delay to Engine Start (TDES) timer.
2. When the TDES timer expires, the genset receives a remote start signal. The engine starts and accelerates to rated speed.
3. When the alternator output reaches the "pickup" level, the Source 2 Available indicator lights. The transfer switch starts the Time Delay Normal to Emergency (TDNE) timer. When this time is complete, the controller proceeds to transfer the load in accordance with how it is configured.
    - If the controller is configured for OT with Sync Check, it monitors the two sources until they are in phase and transfers the load to Source 2. The Source 2 Connected indicator lights.
    - If the controller is configured for Programmed Transition and there is a programmed transition delay, the transfer switch stops in the Neutral position for the Time Delay Programmed Transition (TDPT) and then completes its transition to the Source 2 position. The Source 2 Connected indicator lights.
    - If the controller is configured for Closed Transition, it monitors the two sources until they are in phase, close Source 2 for a maximum of 100ms, and open Source 1. The Source 2 Connected indicator lights.

3.4.4.2 Transfer from Source 2 to Source 1 (Front Panel Test)

This sequence begins with Source 2 supplying power to the load. The Source 2 Available and Source 2 Connected indicators are lit. The sequence ends with Source 1 (utility) assuming the load.

1. When the operator pushes the Test button on the Front Panel, the digital board starts the Time Delay Emergency to Normal (TDEN) timer.
2. When the TDEN is complete, the controller proceeds to transfer the load in accordance with how it is configured.
    - If the controller is configured for OT with Sync check, it monitors the two sources until they are in phase and transfers the load to Source 1. The Source 1 Connected indicator lights.
    - If the controller is configured for Programmed Transition and there is a programmed transition delay, the transfer switch stops in the Neutral position for the Time Delay Programmed Transition (TDPT) and then completes its transition to the Source 1 position. The Source 1 Connected indicator lights.
    - If the controller is configured for Closed Transition, it monitors the two sources until they are in phase, closes Source 1 for a maximum of 100ms, and opens Source 2. The Source 1 Connected indicator lights.
3. A Time Delay Engine Cool-down (TDEC) for the genset is activated. When the engine cool-down delay expires, the genset shuts down and the Source 2 Available indicator goes out.

3.4.4.3 Test With or Without Load

The operator can test the transfer switch, generator, and power system locally. The operator can choose to transfer the load during the test or only test the generator. A test sequence can be activated either through the switch panel push button or through the PowerCommand network.

NOTICE
The Test button does not function unless the Front Panel Security Switch is in the Program position.

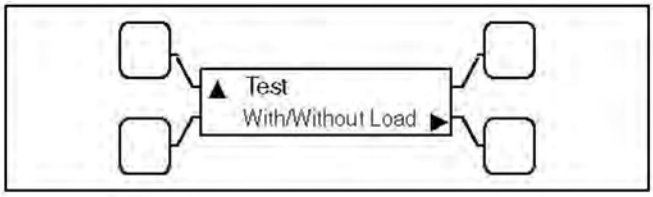

FIGURE 21. TEST WITH OR WITHOUT LOAD SUBMENU

3.4.4.4 Programmable Generator Exerciser

Programmable generator exercises and exercise exceptions are generally programmed to be recurring. They can be programmed from the PC service tool or the digital display, if available.

Level 1 controllers include two programmable generator exercises and two programmable exercise exceptions. All events can be set using the PC service tool or the digital display.

NOTICE
Early versions of software on Level 1 controllers allow for setting only one exercise period and one exercise exception using the digital display.

Level 2 controllers include eight programmable generator exercises and eight programmable exercise exceptions. All events can be set using the PC service tool or the digital display.

NOTICE
Early versions of software on Level 2 controllers allow for setting only two exercise periods and two exercise exceptions using the digital display.

All controllers have a push-button switch on the digital module that enables and disables the exerciser clock. The Real-Time clock must be set before exercise programs are entered.

For **utility-to-genset** configurations: the exerciser clock initiates genset start and run cycles at specified intervals for specified durations.

NOTICE
The exerciser is not used in utility-to-utility or genset-to-genset configurations.

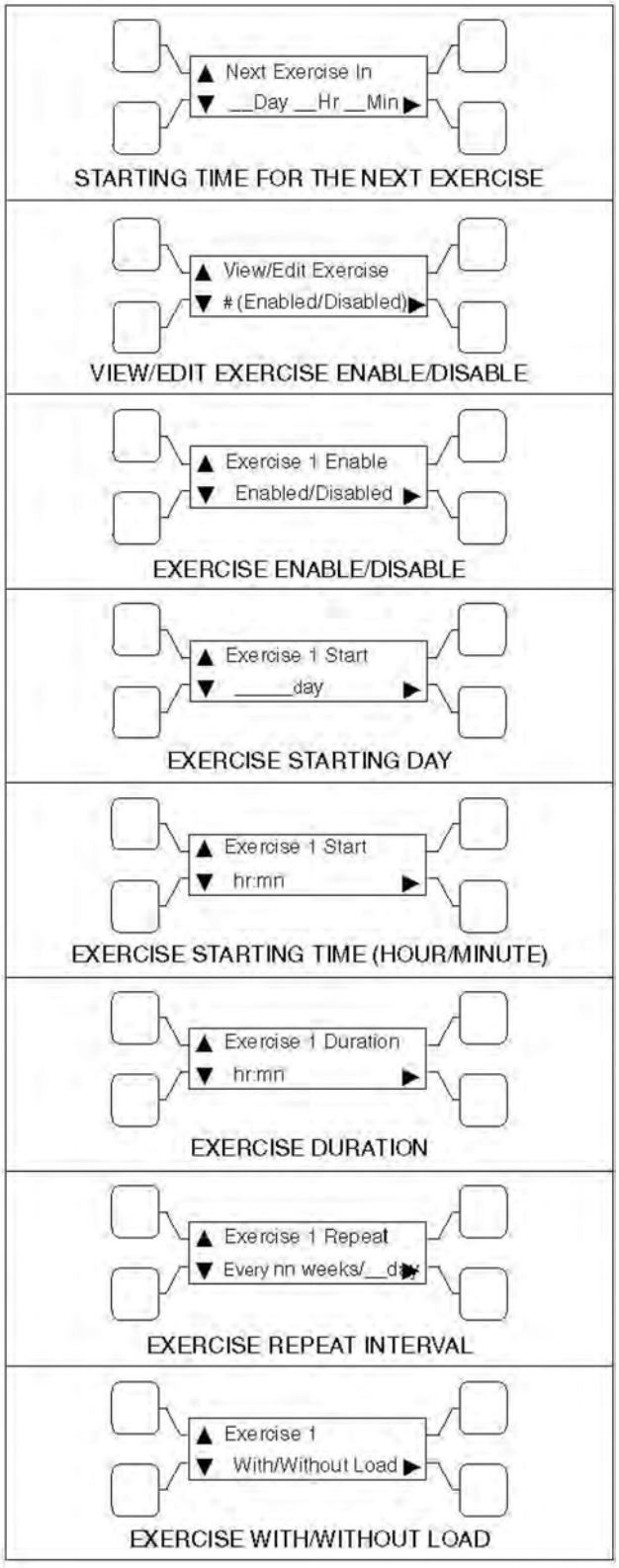

FIGURE 22. EXERCISE SUBMENUS

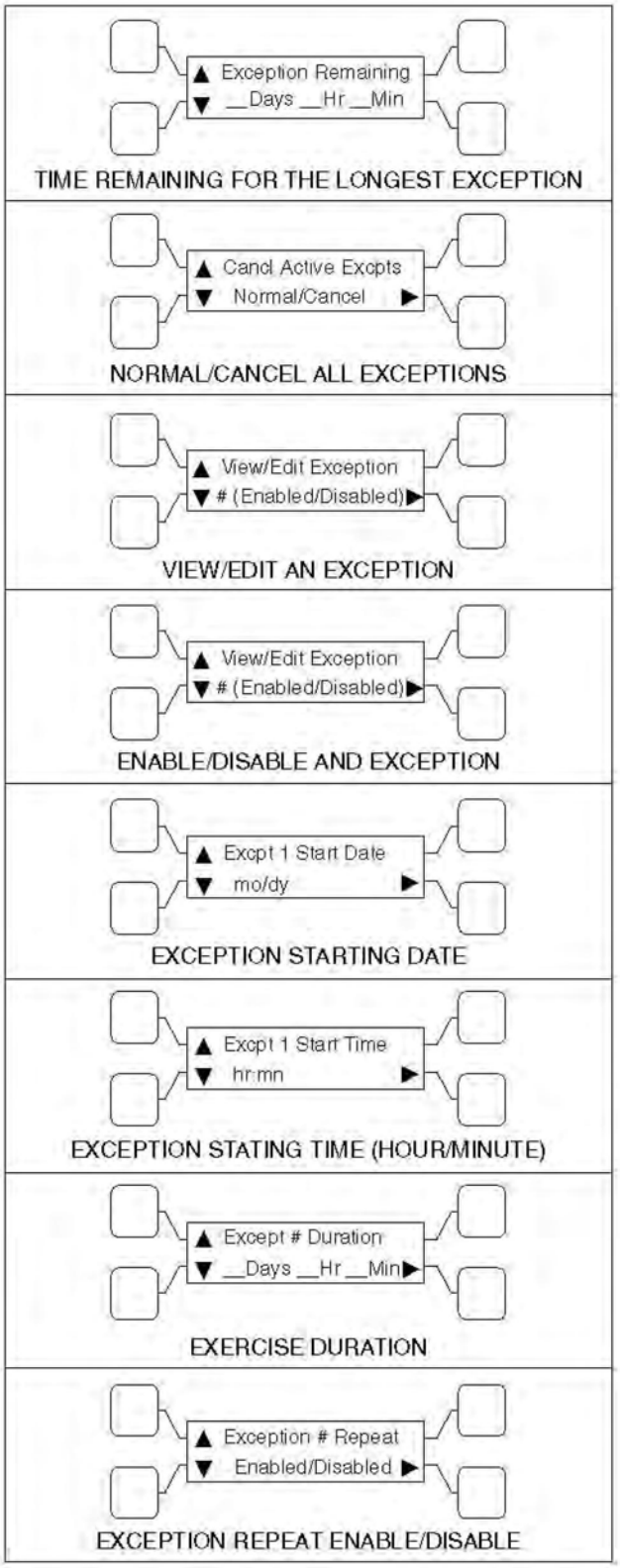

FIGURE 23. EXERCISE EXCEPTIONS SUBMENUS

3.4.4.5 Real-Time Clock

All controllers have a real-time clock that keeps track of the time and date. The controller uses the real-time clock to time and date stamp all events.

NOTICE
The clock is not set at the factory. To set the clock, use the PC service tool or the digital display.

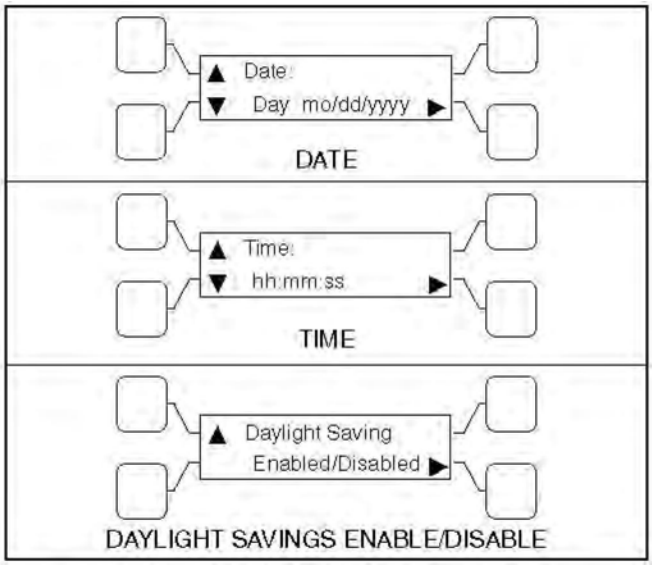

FIGURE 24. CLOCK SUBMENUS

3.4.4.6 Sleep Mode

After a period of screen inactivity (35 minutes), the digital display goes blank. Screen inactivity is when there is no user interaction with the menu system and when there are no events. The digital display is reactivated when an event occurs or when an operator touches one of the menu buttons.

In order to conserve controller battery power, the loss of utility power also causes the digital display to go blank. The digital display is reactivated when a second power source becomes available.

The status of the controller batteries can be viewed using the digital display.

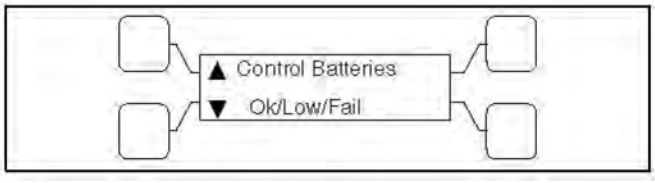

FIGURE 25. CONTROLLER BATTERIES STATUS SUBMENU

3.4.4.7 Remote Test Switch

The transfer switch can be wired with a remote test switch.

For **utility-to-genset** applications, closure of a set of contacts across the remote test transfer input (TB2-5 and TB2-8) causes the transfer switch to sense a simulated utility power failure and sends a start/run signal to the generator set and transfers the load to the genset when it becomes available.

For **utility-to-utility** applications, closure of a set of contacts across the remote test transfer input causes the transfer switch to sense a simulated power failure of the primary source and transfers the load to the backup source.

Opening a set of contacts across the remote test transfer input causes the transfer switch to sense that the primary source has been restored and transfers the load back to the primary source (Source 1).

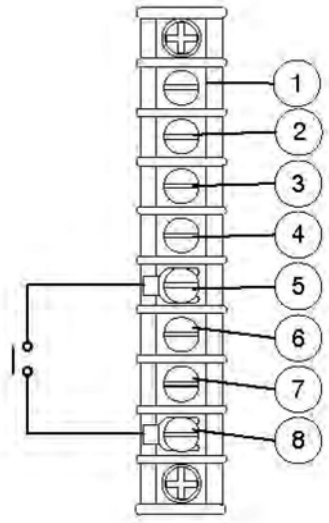

No.	Description	No.	Description
1	GND	2	2
3	B+	4	RMT
5	Remote Test	6	Transfer Inhibit
7	Load Shed (Optional)	8	Common

FIGURE 26. TB2 CONNECTIONS FOR REMOTE TEST TRANSFER

3.4.4.8 Remote Test Input

The transfer switch may be wired for a remote test input. The switch is used to start and stop manually initiated system tests. As with the control panel Test pushbutton, the remote test input can be configured to test with or without load.

A remote test input is set up by connecting a dry (voltage free) contact between TB2-5 and TB2-8. Closing the contact starts a test and opening the contact cancels the test. The Test LED flashes to signify the start of a test and stays on during the test.

Closing the contact causes the transfer switch to sense a (simulated) utility power failure and sends a start/run signal to the genset. If the control is set up to test with load, the load is transferred to the genset when the genset becomes available. The Utility Power Available LED remains on to show that the utility did not fail.

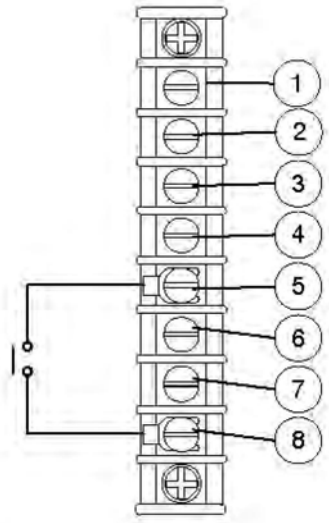

No.	Description	No.	Description
1	GND	5	Remote test
2	2	6	Transfer inhibit
3	B+	7	Retransfer Inhibit
4	RMT	8	Common

FIGURE 27. TB2 CONNECTIONS FOR REMOTE TEST TRANSFER

NOTICE
TB1 and TB2 will accept 22 AWG - 12 AWG wire with 3/8 inch (10 mm) strip. Torque to 9 in-lbs.

3.4.4.9 Transfer Inhibit (PowerCommand Control)

This feature is used to control load transfer to generator sets. When activated, load transfer will not take place unless the Override button on the switch panel is pressed or the transfer inhibit input is disabled. Transfer Inhibits are set up by connecting a remote contact between TB2-6 and TB2-8. Closing the contact enables the feature and opening the contact disables it.

In systems that have multiple closed transition transfer switches the transfer inhibit function should be used to make sure that multiple switches don't transfer at the same time. Refer to the section on closed transition ATS considerations.

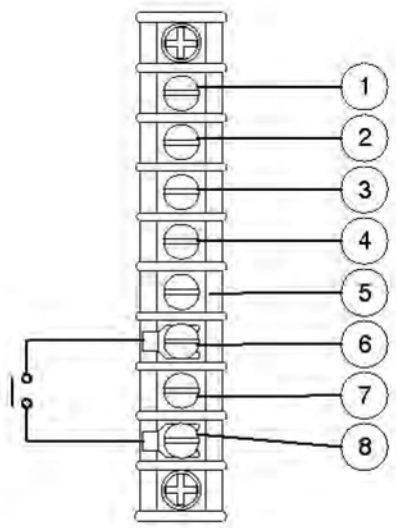

No.	Description	No.	Description
1	GND	2	2
3	B+	4	RMT
5	Remote test	6	Transfer inhibit
7	Load Shed (Optional)	8	Common

FIGURE 28. TB2 CONNECTIONS FOR TRANSFER INHIBIT

3.4.4.10 Retransfer Inhibit (PowerCommand Control)

This feature is used to prevent the ATS from automatically transferring the load back to Source 1 (or the preferred source in genset-to-genset applications). When activated, load transfer will not take place unless the Override button on the switch panel is pressed, the retransfer inhibit input is disabled, or Source 2 (or the backup source in genset-to-genset applications) fails.

In systems that have multiple closed transition transfer switches the retransfer inhibit function should be used to make sure that multiple switches don't transfer at the same time. Refer to the section on closed transition ATS considerations.

NOTICE
If Source 2 (or the backup source in genset-to-genset applications) fails, the Retransfer Inhibit is ignored.

Retransfer Inhibits are set up by connecting a remote contact between TB3-53 and TB3-54. Closing the contact enables the feature and opening the contact disables it. When enabled, the event is displayed on the front panel.

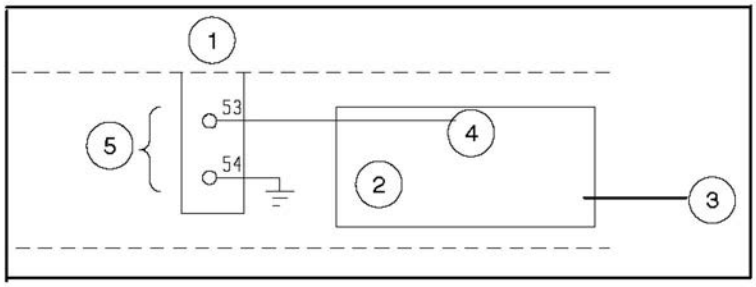

No.	Description	No.	Description
1	TB3	2	J27-1
3	Digital Module	4	Retransfer Inhibit
5	Retransfer Inhibit		

NOTICE

Connect a jumper or closed contact between TB353 and TB354 to inhibit retransfer.

FIGURE 29. TB3 CONNECTIONS FOR RETRANSFER INHIBIT

3.4.4.11 Transfer Times

The controller senses and records the time it takes for the transfer switch to break from one source and reconnect to the other source.

The controller keeps track of open transition transfer times and provides an average open transition transfer time. The controller records the transfer time if the transition mode is an open transition with Sync Check or when a Programmed Transition is used and the Programmed Transition time delay is zero.

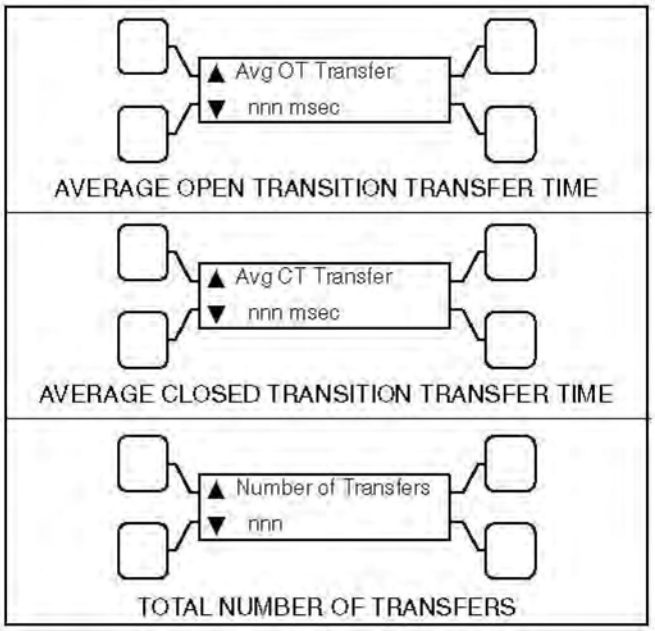

FIGURE 30. TRANSFER SUBMENUS

3.5 Options

3.5.1 Battery Charger Options

Two battery chargers are available. One battery charger is rated for 2 amperes at 12 or 24 VDC. The other battery charger is rated for 15 amperes at 12 VDC or 12 amperes at 24 VDC.

A float-charge battery charger regulates its charge voltage to continuously charge without damage to the battery. As the battery approaches full charge, the charging current automatically tapers to zero amperes or to steady-state load on the battery.

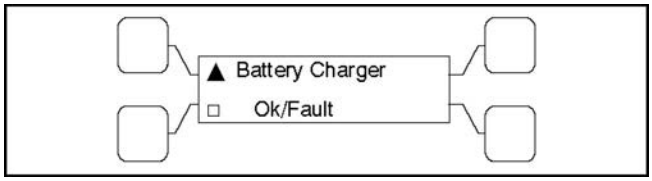

FIGURE 31. BATTERY CHARGER STATUS SUBMENU

3.5.1.1 2-Amp/10-Amp Float Battery Charger Option

A float-charge battery charger regulates its charge voltage to continuously charge without damage to the battery. As the battery approaches full charge, the charging current automatically tapers to zero amperes or to steady-state load on the battery.

Two chargers were available. One battery charger is rated for 10 amperes at 12 or 24 VDC. The other battery charger is rated for 2 amperes at 12 or 24 VDC.

- The 2-ampere battery charger has an ammeter to indicate charging current and a fuse to protect the battery charger circuit.
- The 10-ampere battery charger has three fuses (two on the AC input and one on the DC output), three fault display LEDs, and an ammeter for indication of charging current.

On the 10-ampere charger, three sets of (Form-C) alarm contacts (corresponding to the three fault LEDs) are also available. Using an optional alarm contact harness, these contacts can be wired by the installer to activate other audible or visual alarms.

Under normal operating conditions, the Low Bat and AC Fail relays are energized and the High Bat relay is de-energized. In response to a Low Bat or AC Fail condition, the appropriate normally energized relay (Low Bat or AC Fail) drops out. In response to a High Bat condition, the normally de-energized High Bat relay is energized.

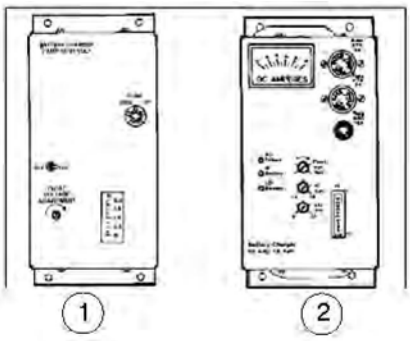

No.	Description	No.	Description
1	2-Amp charger	2	10-Amp charger

FIGURE 32. 2-AMP AND 10-AMP FLOAT BATTERY CHARGERS

3.5.1.2 2-Amp/15-Amp (12VDC), 12-Amp (24VDC) Float Battery Charger Option

A float-charge battery charger regulates its charge voltage to continuously charge without damage to the battery. As the battery approaches full charge, the charging current automatically tapers to zero amperes or to steady-state load on the battery.

Two battery chargers are available. One battery charger is rated for 2 amperes at 12 or 24VDC. The other battery charger is rated for 15 amperes at 12 VDC or 12 amperes at 24 VDC.

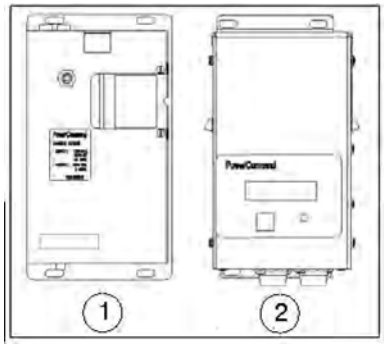

No.	Description	No.	Description
1	2-Amp charger	2	15-Amp (12 Volt), 12-Amp (24 Volt) charger

FIGURE 33. 2-AMP (12 OR 24VDC) AND 15-AMP (12VDC, OR 12-AMP (24VDC))

3.5.1.3 2-Amp Battery Charger

The 2-ampere battery charger has a 5 amp DC output circuit breaker switch on the front of the battery charger. The charger also includes a 5 amp AC fuse to protect the battery charger circuit.

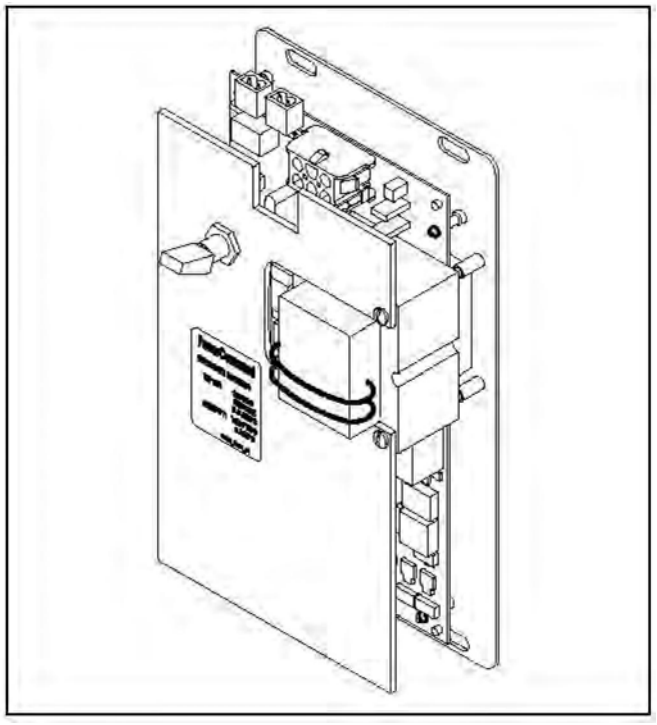

FIGURE 34. 2-AMP POWERCOMMAND BATTERY CHARGER

3.5.1.3.1 2-Amp Control Panel

The 2-amp battery charger control panel includes a digital display, a RESET button and an LED status indicator.

- The 2-line x 16-character digital display displays menus and faults.
- The RESET button is used to select menu options and to clear fault messages.
- The status LED displays the appropriate color for the following conditions.
  - **Green** - On solid indicates unit is charging
  - **Red** - On solid indicates a fault condition. The fault number is shown on the digital display.

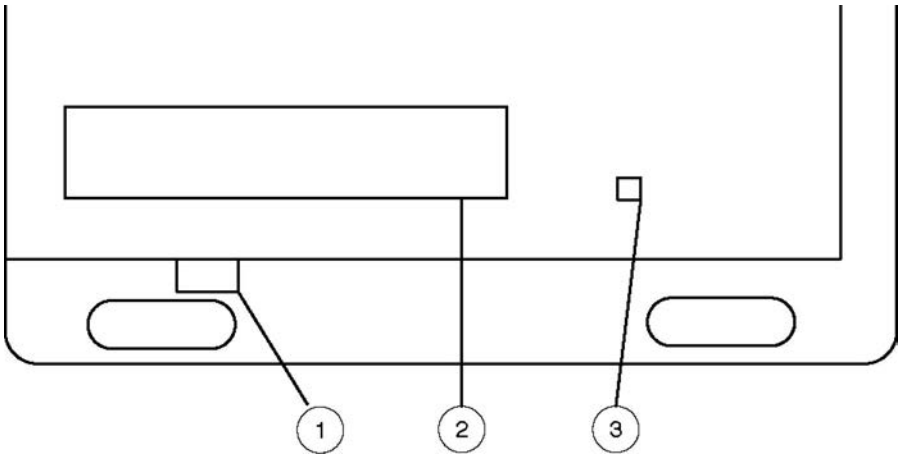

No.	Description	No.	Description
1	Reset button	3	LED status indicator
2	Digital display		

FIGURE 35. 2-AMP BATTERY CHARGER CONTROL PANEL

3.5.1.3.2 2-Amp Battery Charger Configuration

The **RESET** button on the control panel is used to configure the battery charger for the correct battery voltage. (More information on Setup menus is included in the Battery Charger Operator Manual.)

3.5.1.4 15/12-Amp Battery Charger

There are two types of 15/12-amp PowerCommand battery chargers. All 15/12-amp battery chargers have a 20 amp DC circuit breaker switch on the bottom of the battery charger.

- **The 120, 208, and 240 VAC battery chargers include:**
  - Two 10-Amp AC circuit breaker switches
  - A circuit breaker guard
- **The 277, 380, 416, and 600 VAC battery chargers include:**
  - Two AC fuse holders

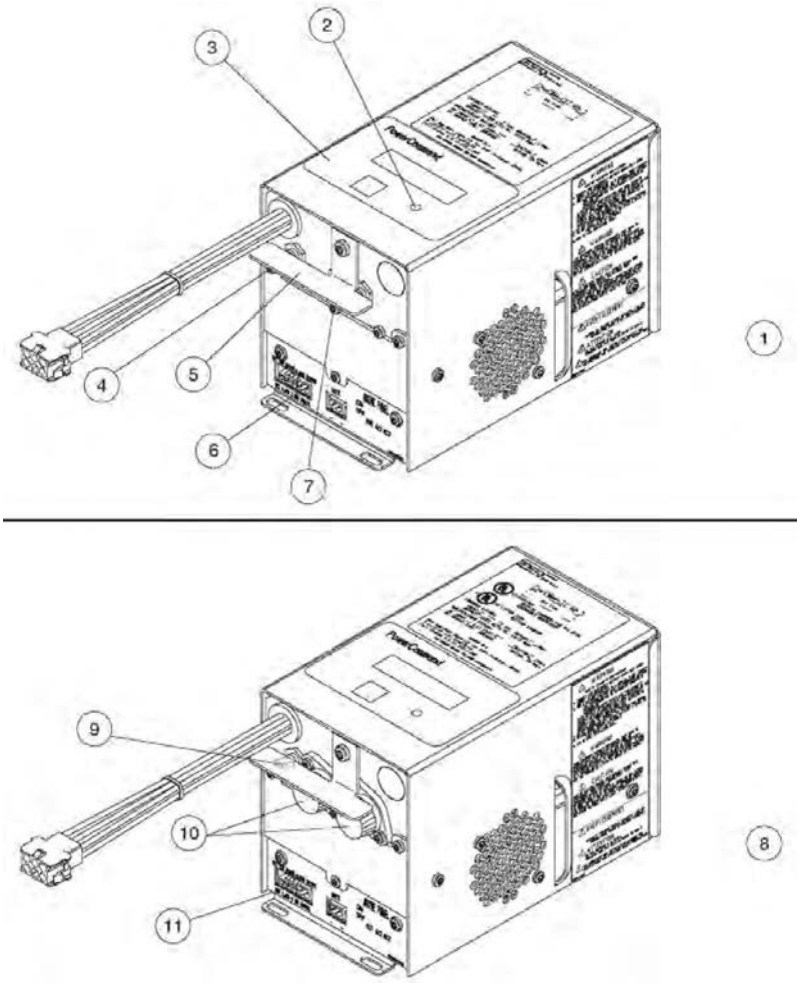

No.	Description	No.	Description
1	120, 208 and 240 VAC battery chargers	7	AC input breaker
2	Status LED	8	227, 380, 416, 480 and 600 VAC battery chargers
3	Control panel	9	20-Amp DC output circuit breaker switch (shown in ON position)
4	DC output breaker	10	AC input fuse holders
5	Circuit breaker guard	11	Optional battery temperature sensor connector
6	Fault alarm output connector		

FIGURE 36. 15/12-AMP POWERCOMMAND BATTERY CHARGERS

3.5.1.4.1 Control Panel

The 15/12-amp charger control panel includes a digital display, a Reset button, and an LED status indicator.

- The 2-line x 16-character digital display displays menus and faults.
- The Reset button is used to select menu options and to clear fault messages.

- The status LED is displays the appropriate color for the following conditions.
  - **Green** - On solid indicates unit is charging
  - **Amber** - On solid indicates Equalizing
  - **Red** - On solid indicates a fault condition. The fault number is shown on the digital display.

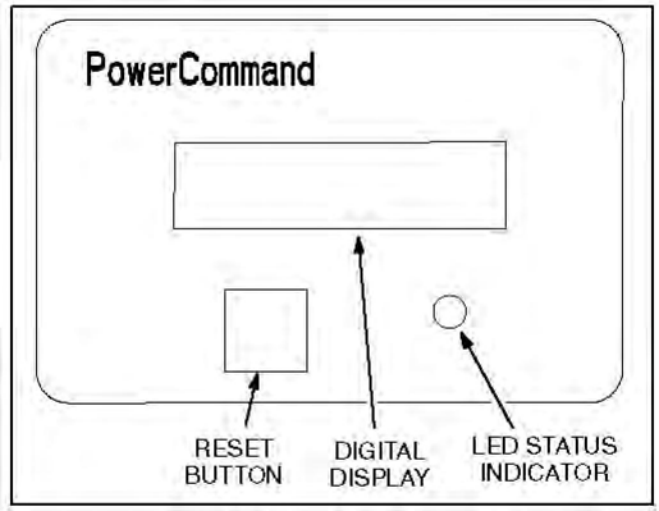

FIGURE 37. 15/12-AMP CHARGER CONTROL PANEL

3.5.1.4.2 Battery Charger Configuration

The **RESET** button on the control panel is used to configure the battery charger. (More information on Setup menus is included in the Battery Charger Operator Manual.)

- **Battery Voltage and Type** - The battery charger must be correctly configured, using the Setup menus, for the correct battery voltage and type before it is connected to the battery. The battery voltage can be set for 12 or 24 VDC (default = 12 VDC). The battery type can be set for Lead-Acid, Gel, or AGM batteries (default = Lead-Acid).

NOTICE
A factory installed battery charger is set up for the proper DC battery voltage requested on the production order, with the Lead-Acid battery type selected as the default.

- **Battery Equalization** - Battery equalization is available for lead-acid batteries that are completely charged, using the Equalize Battery screen in the Setup menus. When battery equalization is in process, the LED status indicator turns amber.

3.5.1.4.3 Optional Battery Temperature Sensor

A connector for an optional battery temperature sensor is located on the bottom of the battery charger. When used to monitor battery temperature, the optional battery temperature sensor is connected from the battery charger to the positive terminal of the battery. A fault message (fault code 2263) is displayed if the battery temperature is too high (reaches 131 °F (55 °C)).

3.5.1.5 Battery Charger Alarm Contacts Options

The optional 10-ampere battery charger can include three sets of Form-C relay contacts, as an additional option.

Under normal operating conditions, the Low Bat and AC Fail relays are energized and the High Bat relay is de-energized. In response to a Low Bat or AC Fail condition, the appropriate normally energized relay (Low Bat or AC Fail) drops out. In response to a High Bat condition, the normally de-energized High Bat relay is energized.

The contacts are rated for 4 amperes at 120 VAC or 30 VDC. Connections to these contacts are made at terminals 41-42-43 (AC Failure), 44-45-46 (High Battery Voltage) and 47-48-49 (Low Battery Voltage) of TB3.

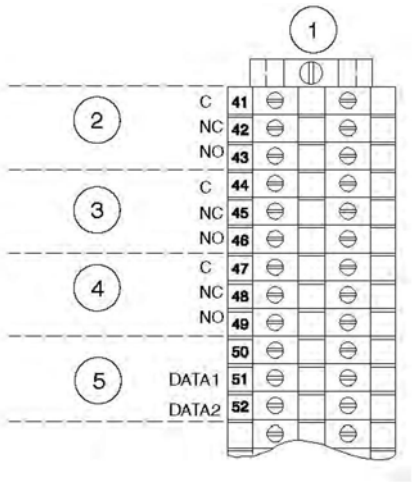

No.	Description	No.	Description
1	TB3	2	AC Line Failure
3	High Battery Voltage	4	Low Battery Voltage
5	Network Data		

FIGURE 38. BATTERY CHARGER STATUS SUBMENU

3.5.1.5.1 Relay Module Option

The Relay Module provides nine sets of Form-C contacts and two sets of normally open contacts that are rated for 2 Amps at 30 VDC or 0.60 Amps at 120 VAC. The module includes the Elevator Pre-Transfer Delay Signal. The relay contacts may be used with other applications.

The Relay Module is located on the left inside wall of the transfer switch enclosure.

The Fail to Disconnect relay is active when the transfer switch remains connected to both sources for more than 100 msec during a closed transition transfer. It should be wired to the shunt trip of the breaker feeding the ATS on either the normal or the emergency side. Refer to the section on closed transition ATS wiring considerations.

The status of the relay module (OK or Not Installed) can be viewed with the digital display. This menu is included in the About submenus.

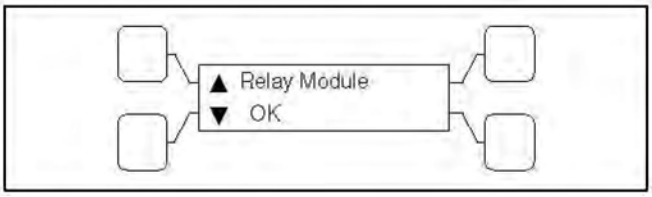

FIGURE 39. RELAY MODULE STATUS SUBMENU

3.5.1.5.2 Relay Signal Module

TABLE 1. RELAY SIGNAL MODULE

Relay Signal	Control Type
Source 1 Connected	Level 1 and Level 2
Source 1 Available	Level 1 and Level 2
Source 2 Connected	Level 1 and Level 2
Source 2 Available	Level 1 and Level 2
Test/Exercise Active	Level 1 and Level 2
Load Shed Active	Level 1 and Level 2
Fail to Transfer/Retransfer	Level 2
Fail to Synchronize	Level 2
Fail to Disconnect	Closed Transition Level 2
Elevator Pre-Transfer	Level 1 and Level 2
Transfer Switch Not In Auto	Level 1 and Level 2

3.5.1.5.3 Auxiliary Relays Option

Auxiliary relays provide contacts for energizing external alarms, remote indicators and control equipment such as louver motors and water pumps.

All relays have two normally open and two normally closed contacts that are rated for 10 Amps at 600 VAC. Connections to the auxiliary relays are made directly to the relay terminals.

There are two types of auxiliary relay coils:

- 12 VDC
- 24 VDC

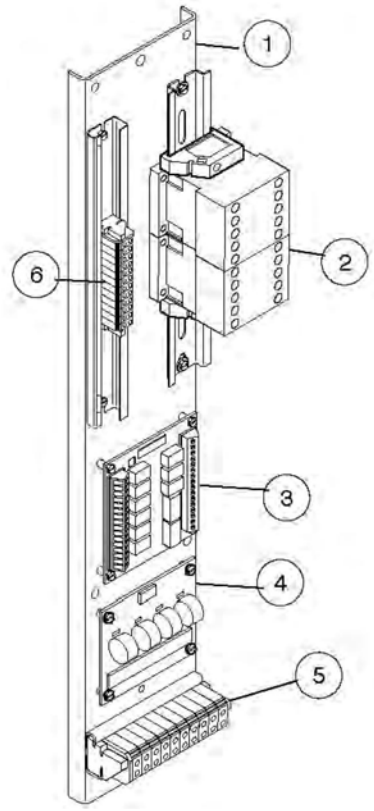

No.	Description	No.	Description
1	Mounting panel	4	Current module
2	Auxiliary relays	5	TB4
3	Relay module	6	TB3

FIGURE 40. CONTROL WIRING CONNECTIONS

3.5.2 PowerCommand Network Interface Option

The PowerCommand® network interface option includes a PowerCommand Network Communications Module (NCM) that provides a connection to the PowerCommand network. The module is LonWorks compatible for integration into customer monitoring strategy.

The Network Interface Module is only enabled with the PC service tool.

For installations that include an NCM, stranded twisted pair network cable is connected to the left side of terminals 51 and 52 on TB3. The NCM is located on the left side of the digital module.

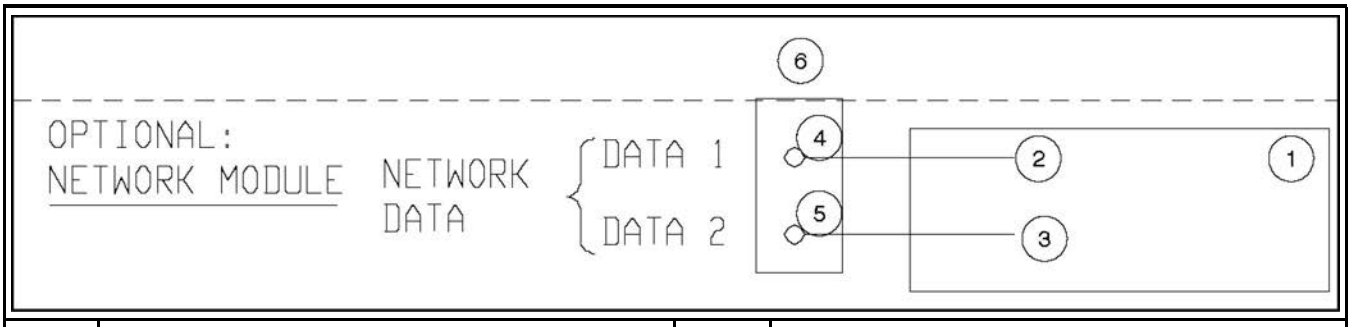

No.	Description	No.	Description
1	Network Module	2	Data 1 (J30-1)
3	Data 2 (J30-2)	4	51
5	52	6	TB3

FIGURE 41. NETWORK COMMUNICATIONS MODULE CONNECTIONS

The status of the NCM (OK, Not Installed, Not Enabled or Not Available) can be viewed with the digital display. This menu is located in the About submenus.

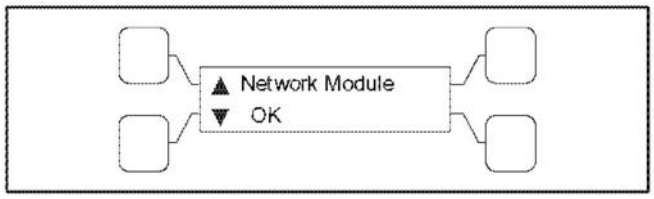

FIGURE 42. NETWORK MODULE STATUS SUBMENU

NOTICE
Early production NCMs included two Lithium batteries and a battery hold-down bracket. Current production NCMs no longer use batteries.

3.5.2.1 Network Sequencer

When an NCM is installed, controllers can include up to eight timed network variables to use for turning on loads in sequence after a transfer, a retransfer or both. Each variable can be delayed up to 60 seconds for each of the outputs. The network variables are intended to activate relays on the Network Digital Input/Output Module (DIM). The DIM is located remotely from the transfer switch.

The Sequencer feature allows the user to send a predetermined sequence of network event announcements. The announcements are sent in a timed, sequential order and are used to turn ATS loads off and on. When used, a few seconds should be allowed between load steps to allow the generator voltage and frequency to stabilize.

The Sequencer submenus, available through the digital display, can only be viewed if the NCM is installed and enabled. These menus allow the user to enable/disable the feature, set the operational mode, activate up to eight relay output signals, and set an output time delay from 0 to 60 seconds for each of the outputs. Additional information on how to adjust these values is included in the Network Manual.

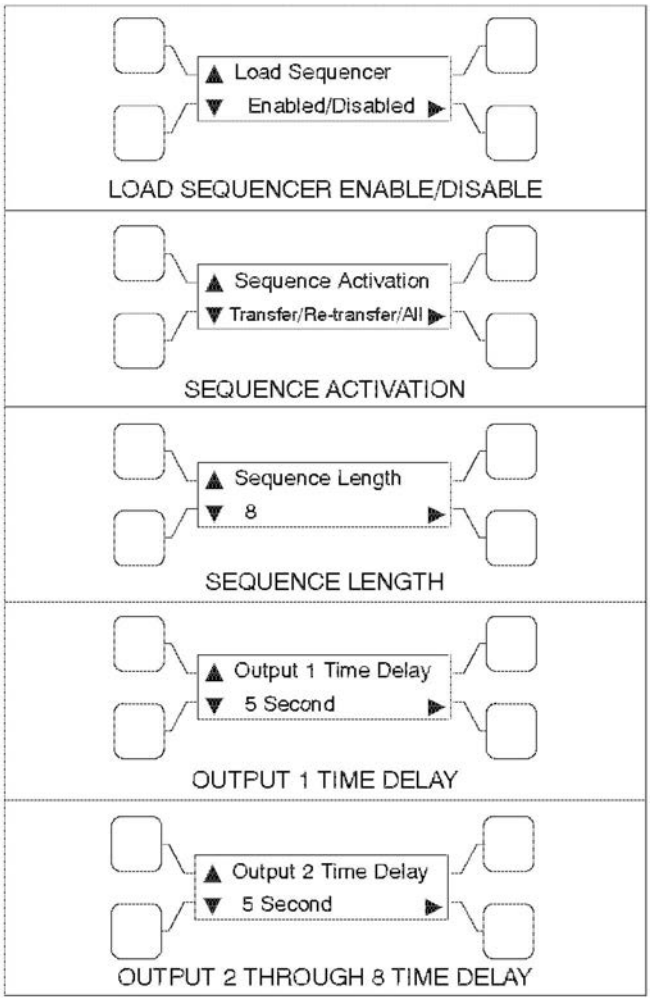

FIGURE 43. SEQUENCER SUBMENUS

3.5.2.2 Network System Device Status

If an NCM is installed, the user can view the status of up to 32 LonWorks networked devices through the digital display. The status of networked generator sets, additional ATSs, and the Master Control (if connected) can be viewed.

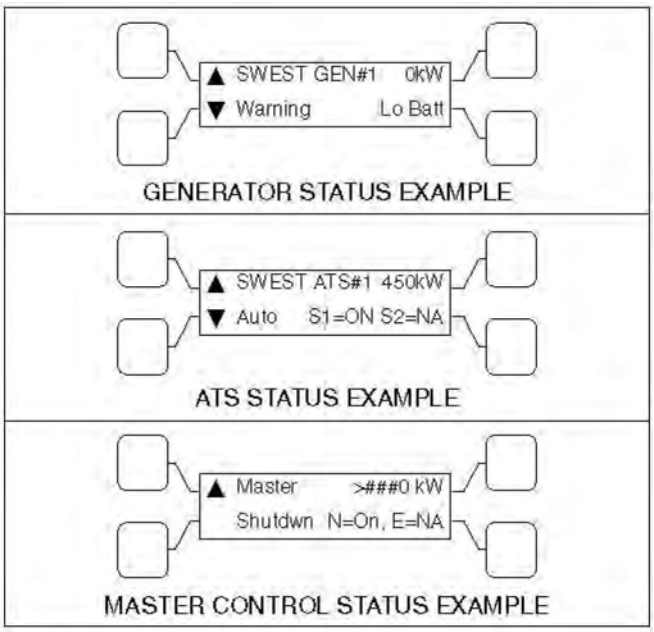

FIGURE 44. SYSTEM SUBMENUS

3.5.2.3 Network Communications Module (NCM)

NOTICE
The current Network Communications Module being used on OTPC transfer switches includes a self-installation feature. To self-install, press and hold the Service button (S3) for at least two seconds until the Node "OK" LED (DS3) begins flashing

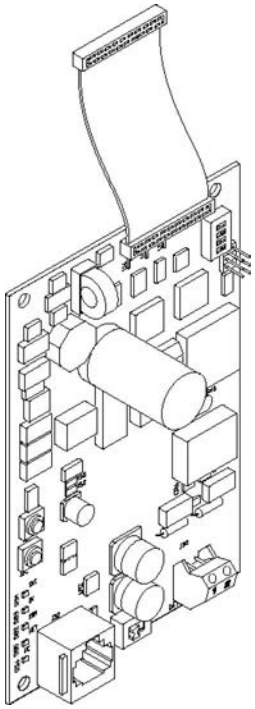

FIGURE 45. NETWORK COMMUNICATIONS MODULE (NCM)

3.5.2.4 Network Communications Module (NCM)

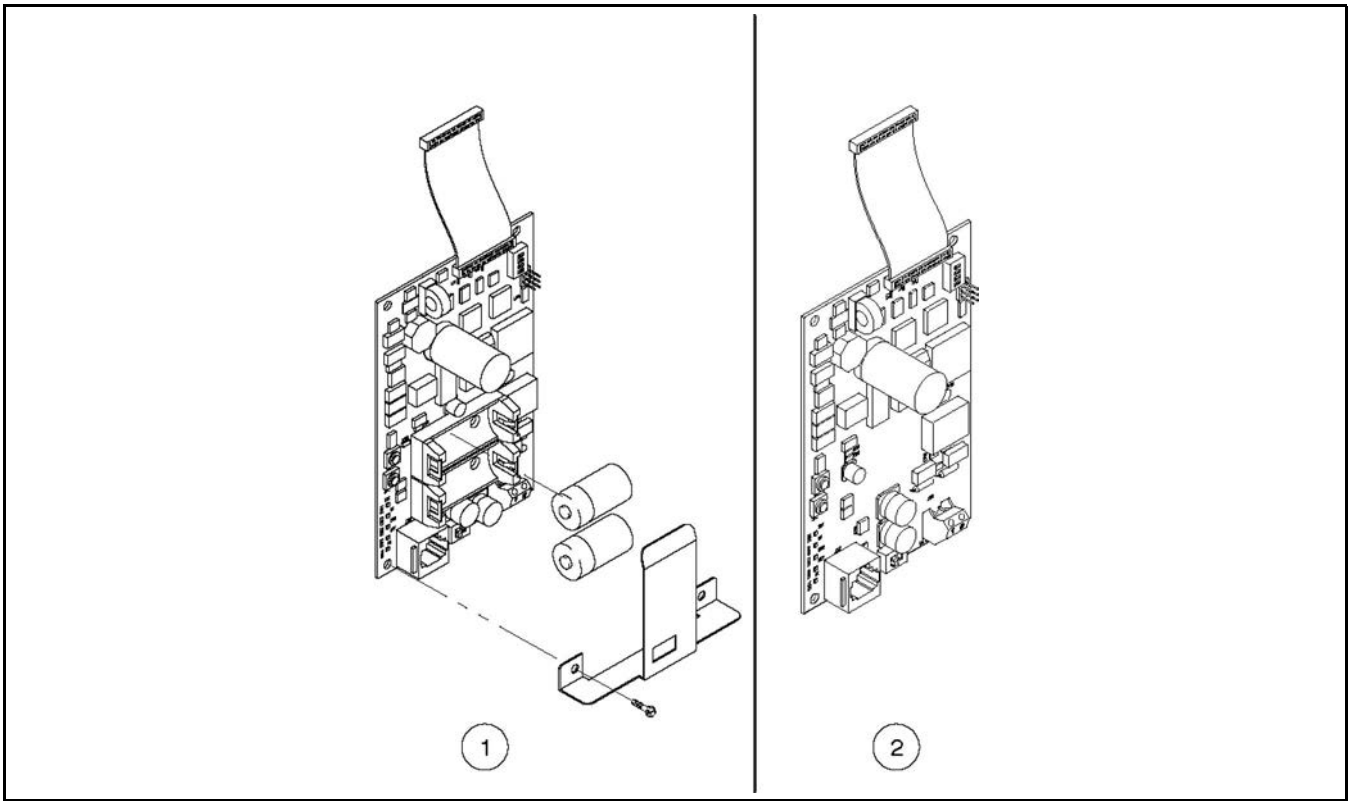

No.	Description	No.	Description
1	Early production version	2	Current production version

The current Network Communications Module being used on OTPC transfer switches includes a self-installation feature. To self-install, press and hold the Service button (S3) for at least two seconds until the Node "OK" LED (DS3) begins flashing.

FIGURE 46. NETWORK COMMUNICATIONS MODULE (NCM)

3.5.3 Load Sequencing Option

Controllers can include up to eight timed network variables to use for turning on loads in sequence after a transfer, a retransfer, or both. The Network Communications Module (NCM) must be installed. Each variable can be delayed up to 60 seconds after the preceding variable. The network variables are intended to activate relays on the Network Digital Input/Output Module (DIM). The DIM is located remotely from the transfer switch.

3.5.4 Load Current and Power Sensor Option

Three-phase Level 2 controllers can include a load current and power sensor (Current Module). The control senses the four load currents (three line currents and the neutral current), three load voltages, and three power factor angles. The control calculates the real load power and the apparent load power.

The load current sensing feature is active on Level 2 controllers when the Current Module is installed and connected to the Digital Module.

The control issues a warning when the neutral current exceeds a user specified value between 100 and 150% of the rated current during a specified time period between 10 and 60 seconds.

The warning threshold (100 - 150%) and time delay (10 - 60 sec) can only be set with the PC service tool.

The status of the load current module (OK or Not Installed) can be viewed with the digital display. This menu is included in the About submenus.

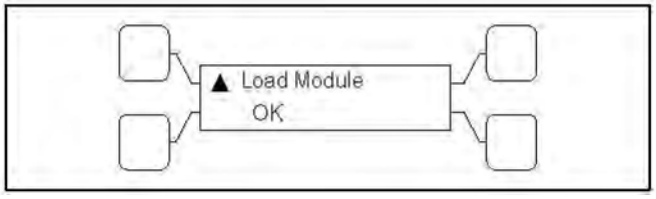

FIGURE 47. LOAD CURRENT MODULE STATUS SUBMENU

3.5.5 Source 1 and Source 2 Connected Relays

The Source 1 and Source 2 Connected relays are energized when their respective power sources are available, ready to produce power and connected to the load.

These relays are latching relays and will retain their last state in case of a complete loss of power.

3.5.6 Source 1 and Source 2 Available Relays

The Source 1 and Source 2 Available relays are energized when their respective power sources are producing power.

3.5.7 Test or Exercise Active Relay

The Test or Exercise Active relay is energized when the system is in test or exercise mode.

3.5.8 Load Shed Relay

The Load Shed relay is active when the transfer switch has been commanded to disconnect the load from power Source 2.

3.5.9 Fail to Transfer/Retransfer Relay

The Fail to Transfer/Retransfer relay is energized whenever the transfer switch does not *open* or *close* within a set time interval after the command to transfer or retransfer.

3.5.10 Fail to Synchronize Relay

The Fail to Synchronize relay is energized when the two power sources did not come into synchronicity (frequency, voltage, phase) within a two-minute limit; during a transfer between two live sources.

3.5.11 Fail to Disconnect Relay

The Fail to Disconnect relay (causes a fault) is used only in closed transition modes. The relay is energized whenever the two sources remain parallel longer than a set time limit.

3.5.12 Elevator Pre-Transfer Delay Relay

The **Elevator Pre-Transfer Delay** signal delays transfer (or retransfer) for a specified time to give warning to an elevator control that a transfer (or retransfer) is about to occur.

This time delay (TDEL) is adjustable over a range of 0 to 60 seconds. The default value is 0 seconds. The value is set with the PC service tool or the digital display, if available.

3.5.13 Not-in-Auto Relay

The ATS **Not-In-Auto** relay is energized when any one of the following occurs:

- Motor Disconnect Switch is set to Off
- Wiring harness is disconnected from J12 on the Power Module
- Controller is set to Offline

3.6 Control Panel (PowerCommand Control)

The PowerCommand control features are divided into three groups:

- **Bar graph meter panel** - is not available on Level 1 and is optional on Level 2 controls.
- **Switch panel** - is standard on all transfer switches.
- **Digital display** - is standard on Level 2 controls and is optional on Level 1 controls.

3.6.1 Bar Graph Meter Panel

The bar graph meter panel is not available on Level 1 controls and is optional on Level 2 controls.

This feature includes:

- **A three phase AC ammeter** -displays percent of full load currents in amperes (1-125%).
- **A power meter** - displays the real power in percent of full load in kilowatts (0-125%).
- **A power factor meter** - displays the real power delivered to the load (1.0 - 0.6 lagging) and (1.0 - 0.9 leading).
- **A frequency meter** - displays the output frequency (percent of nominal frequency), of the power source connected to the load (70-110%).
- **A three phase AC voltmeter** - displays percent of line to neutral voltages of the power source connected to the load (70-110%).

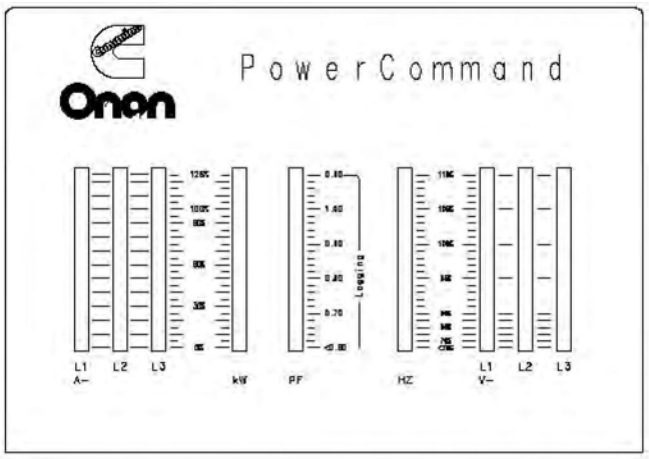

FIGURE 48. BAR GRAPH METER PANEL

3.6.2 Switch Panel

The switch panel is a standard feature on all PowerCommand controlled (PC) transfer switches. It contains six indicator lamps and three membrane switches.

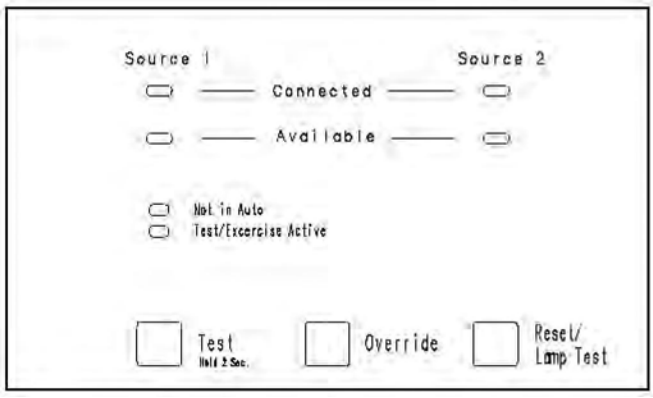

FIGURE 49. SWITCH PANEL

Source 1 Available and Source 2 Available: These indicators are lit when the corresponding sources have acceptable output voltage and/or frequency. These indicators can be lit simultaneously.

Source 1 Connected: This indicator is lit when the transfer switch is in the normal position and Source 1 is supplying power to the load.

Source 2 Connected: This indicator is lit when the transfer switch is in the emergency position and Source 2 is supplying power to the load.

Not in Auto: For all configurations, this indicator flashes when the transfer switch is not in Auto.

NOTICE
The transfer switch is not in Auto when any of the following signals are active:

- Motor Disconnect Switch is set to OFF
- Wiring harness is disconnected from J12 on the power module

- Controller is set to OFFLINE

Test/Exercise Active: The Test/Exercise Active indicator is lit when the transfer switch has a test or exercise in progress.

Test: For utility-to-genset applications, the Test switch sends a start signal to the generator set designated Source 2 and blinks the Test/Exercise Active indicator.

After the start and transfer time delays or source synchronization, Source 2 starts and assumes the load (if the With Load option is selected).

- Press the Test switch again to end the test; the Test/Exercise Active indicator goes out and Source 1 resumes as the source of power.

Override: The Override switch terminates most system time delays.

NOTICE
The Program Transition (TDPT), Elevator Signal (TDEL) and Engine Cool Down (TDEC) are not affected by this switch.

- If you press this switch while the Transfer Inhibit input is active, the switch proceeds to transfer the load.
- If you press this switch while the Retransfer Inhibit input is active, the switch proceeds to retransfer the load.

Reset/Lamp Test: The Reset/Lamp Test switch turns on all control panel indicators. This switch also acknowledges events.

3.6.2.1 Security Key Switch Option

The optional security key switch is located on the front panel. When it is in the Panel Lock position, it disables the front panel input switches, Test and Override. It also prevents changes to the digital display from the setup menus; however, the current values are displayed. Changes can be made when the switch is in the Program position.

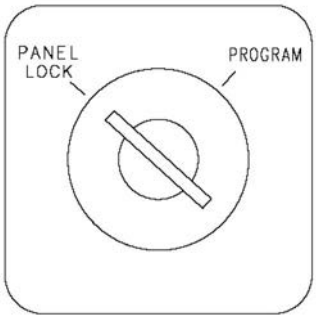

FIGURE 50. SECURITY KEY SWITCH

3.6.3 Digital Display

The digital display is standard on Level 2 controls and optional on Level 1 controls. It contains a 2-line by 20-character digital display module and 6 momentary contact membrane switches. The module displays the menu system. The switches are used to navigate through the menu system.

Each menu indicates the function of the four buttons at the sides of the display module. Not all buttons are active for each menu.

Sleep Mode: After a period of screen inactivity (no user interaction with the menu system and no occurring events), the digital display goes blank. The digital display is reactivated when an event occurs or when an operator touches one of the menu buttons.

In order to conserve controller battery power, the loss of utility power also causes the digital display to go blank. The digital display is reactivated when a second power source becomes available.

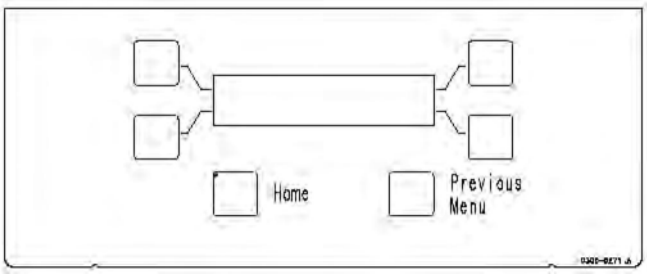

FIGURE 51. DIGITAL DISPLAY

3.6.4 Time Delay Glossary

Time Delay	Abbreviation	Definition
Start Time Delay	TDES	This delay is adjustable from 0 to 15 seconds in 1 second increments on Level-1 controls and from 0 to 120 seconds in 1 second increments on Level-2 controls. The default value is 3 seconds for both. This brief time delay prevents the generator set from starting during short power interruptions. Timing starts at the Source 1 power interruption. If the duration of interruption exceeds the delay time, the control system signals the generator set to start. The value is set with the PC service tool or the digital display when it is available.
	TDES-A and TDES-B	For genset-to-genset applications, TDES-A is the start time delay to start Source 2 genset and TDES-B is the start time delay to start Source 1 genset. For utility-to-utility applications, TDES-A and TDES-B are not available.
Stop Time Delay (Cool-down)	TDEC	This delay is adjustable from 0 to 30 minutes in 1 minute increments. The default value is 10 minutes. It begins timing when the load is retransferred to Source 1. At the end of the delay, the stop signal is sent to the generator set. During this time delay, the generator set cools down at no load before stopping. The value is set with the PC service tool or the digital display when it is available.
	TDEC-A and TDEC-B	For genset-to-genset applications, TDEC-A is the stop time delay to stop Source 2 genset and TDEC-B is the stop time delay to stop Source 1 genset. For utility-to-utility application, TDEC-A and TDEC-B are not available.
Transfer Time Delay	TDNE	This delay begins when Source 2 (typically the generator) voltage and frequency reach the settings of the control. After the delay, the transfer switch transfers the load to Source 2. This brief time delay allows the generator set to stabilize before the load is applied. It has an adjustable range of 0 to 120 seconds in 1 second increments. The default value is 10 seconds. The value is set with the PC service tool or the digital display when it is available. TDNE is the delay from preferred source to backup source in utility-to-utility applications and gen-to-gen applications.

Time Delay	Abbreviation	Definition
Retransfer Time Delay	TDEN	This delay begins the moment Source 1 line voltage and frequency return to specified values. After the delay, the transfer switch can retransfer the load to Source 1. The delay allows the Power Source 1 to stabilize before retransfer. It has an adjustable range of 0 to 30 minutes in 1 minute increments. The default value is 10 minutes. The value is set with PC service tool or the digital display when it is available. TDEN is the delay from backup source to preferred source in utility-to-utility applications and gen-to-gen applications.
Programmed Transition Time Delay	TDPT	This delay is the time that the switch spends in the neutral position, when neither source is connected to the load, during a transfer or a retransfer. It begins when the switch moves to the neutral position and opens the contacts of the switch connected to the load. After the delay the control transfers the load. This time delay allows residual voltage of inductive loads to decay sufficiently before connecting it to another source. It is adjustable from 0 to 60 seconds in 1 second increments. The default value is 0 seconds. The proper adjustment is a function of the load. This feature is enabled by default. The value is set with the PC service tool or the digital display when it is available.
Elevator Pretransfer Time Delay	TDEL	The Elevator Pre-Transfer Delay Signal delays transfer (or retransfer) for a specified time to give warning to an elevator control that a transfer (or retransfer) is about to occur. It is adjustable from 0 to 60 seconds in 1 second increments. The default value is 0 seconds. This feature is enabled by default. The value is set with the PC service tool or the digital display when it is available.

This page is intentionally blank.

4 Operation

4.1 Manual Operation

The transfer switch has operator handles for manually transferring the load. Manual operation must be performed by qualified personnel under **No-Load Conditions** only.

4.1.1 Manual Operation - 40 to 1000 Amp Switches

⚠ WARNING

Manual operation of the transfer switch under load presents a shock hazard that can cause severe personal injury or death. Do not attempt to operate switch manually when it is under load. Follow the "Safety Related Work Practices" listed in NFPA 70E.

1. Open the cabinet door of the automatic transfer switch.
2. Move the Motor Disconnect switch to the Off position.
3. **Transfer - from Source 1 (Normal) to Source 2 (Emergency):**
    a. Pull the upper manual operator handle down.
    b. Push the lower manual operator handle down.
4. **Retransfer - from Source 2 to Source 1:**
    a. Pull the lower manual operator handle up.
    b. Push the upper manual operator handle up.
5. Before moving the Motor Disconnect switch back to the Auto position, remember the transfer switch transfers the load to the active power source. If both power sources are available, it transfers the load to the Source 1 or to the preferred source.

⚠ WARNING

Automatic transfer switch operation results in rapid movement of the manual operator handles and presents a hazard of severe personal injury. Keep hands clear of handles when switching back to automatic operation.

6. Move the Motor Disconnect switch to the Auto position.
7. Close the cabinet door.

4.1.2 Manual Operation - 1200 to 4000 Amp Switches

The transfer switch has operator handles that are intended for maintenance use only. Manual operation must be performed by qualified personnel under **NO-LOAD CONDITIONS ONLY**. Use the following procedure:

⚠ WARNING

Manual operation of the transfer switch under load presents a shock hazard that can cause severe personal injury or death. Do not attempt to operate switch manually when it is under load. Follow the "Safety Related Work Practices" listed in NFPA 70E.

4.1.2.1 Manual Transfer to Source 1

⚠ WARNING

Manual operation of the transfer switch under load presents a shock hazard that can cause severe personal injury or death. Do not attempt to operate switch manually when it is under load. Follow the "Safety Related Work Practices" listed in NFPA 70E.

If you determine that Source 1 is available but the transfer switch does not automatically retransfer, perform this procedure to manually retransfer to Source 1.

1. Open the Source 2 and Source 1 disconnect switches or breakers that feed the transfer switch. If there is no Source 2 side disconnect, turn off the generator set.
2. When you are certain that neither power source is supplying power to the transfer switch, open the transfer switch cabinet door and turn the Motor Disconnect switch to OFF.

⚠ WARNING

Manual operation of the transfer switch under load presents a shock hazard that can cause severe personal injury or death. Do not attempt to operate switch manually when it is under load.

3. A manual operating handle is provided with the transfer switch. The handle is a steel rod or tube, with a knob or hand grip on one end. On standard transfer switches, there are two manual operator slots - one for the contacts of each power source.
   a. Insert the handle in the slot for the Source 1 (Normal) contacts and open the Source 1 contacts.
   b. Insert the handle in the slot for the Source 2 (Emergency) contacts and close the Source 2 contacts. Be certain to push the handle all the way to the LOCK position. A distinct over-center locking action can be felt.
   c. Return the handle to its storage position.

⚠ WARNING

Automatic transfer switch operation results in rapid movement of the manual operator mechanism and present s a hazard of severe personal injury if the operator handle is engaged in the mechanism. Remove the handle and place it in its storage position.

4. After the switch has been transferred to Source 1 and the operator handle has been removed from the mechanism, close and lock the handle door.
5. Close the Source 2 and Source 1 disconnect switches or breakers that feed the transfer switch. Start the generator set if it was previously turned off.
6. If the transfer switch is not functioning correctly, call your dealer or distributor immediately.

4.1.2.2 Manual Transfer to Source 2

⚠ WARNING

Manual operation of the transfer switch under load presents a shock hazard that can cause severe personal injury or death. Do not attempt to operate switch manually when it is under load. Follow the "Safety Related Work Practices" listed in NFPA 70E.

If you determine that Source 2 is available but the transfer switch does not automatically transfer, perform this procedure to manually transfer to Source 2.

1. Open the disconnect switches or breakers that feed the transfer switch. If there is no Source 2 disconnected, turn off the generator set.
2. When you are certain that neither power source is supplying power to the transfer switch, open the transfer switch cabinet door and turn the Motor Disconnect switch to OFF.

> **⚠ WARNING**
> ***Manual operation of the transfer switch under load presents a shock hazard that can cause severe personal injury or death. Do not attempt to operate switch manually when it is under load.***

3. A manual operating handle is provided with the transfer switch. The handle is a steel rod or tube, with a knob or hand grip on one end. On standard transfer switches, there are two manual operator slots - one for the contacts of each power source.
   a. Insert the handle in the slot for the Source 1 (Normal) contacts and open the Source 1 contacts.
   b. Insert the handle in the slot for the Source 2 (Emergency) contacts and close the Source 2 contacts. Be certain to push the handle all the way to the LOCK position. A distinct over-center locking action can be felt.
   c. Return the handle to its storage position.

> **⚠ WARNING**
> ***Automatic transfer switch operation results in rapid movement of the manual operator mechanism and present s a hazard of severe personal injury if the operator handle is engaged in the mechanism. Remove the handle and place it in its storage position.***

4. After the switch has been transferred to Source 2 and the operator handle has been removed from the mechanism, close and lock the handle door.
5. Close the disconnect switches or breakers that feed the transfer switch. Start the generator set if it was previously turned off.
6. If the transfer switch is not functioning correctly, call your dealer or distributor immediately.

4.2 Automatic Operation

For utility-to-genset and genset-to-genset configurations, the generator set control must also be set for automatic (in the AUTO position) operation.

For automatic operation of the transfer switch, place the following control switches in the following positions:

4.2.1 Motor Disconnect Switch

For automatic operation of the transfer switch, place the Motor Disconnect switch in the **AUTO** position.

4.3 System Testing

4.3.1 Generator Set Manual Start Test

This test is used with utility-to-genset applications only.

1. Set the Test With/Without Load variable to the Without Load value.
2. Press and hold the Test switch for two seconds. The generator set starts and runs after the start time delay.
3. At the end of the test period, press the Test switch again. The generator cools down and stops.

4.3.2 With-Load Standby System Test

1. Set the Test With/Without Load variable to the With Load value (refer to the Digital Display Menu System section or the PC service tool for details).

NOTICE
The Test With/Without Load variable must be set to the With Load value in order to test with load.

2. Press and hold the Test switch for two seconds. To bypass the transfer time delay and cause a faster load transfer, press the Override switch. The generator set starts and assumes the load after the start time delay.
3. At the end of the test period, press the Test switch again. To bypass the retransfer time delay and cause a faster load retransfer, press the Override switch. The generator stops after the stop time delay.

4.4 Generator Set Exercise

Run the generator for at least 30 minutes once each week with at least 50% load (if possible). If you do not want to use the exerciser, use the Test switch, to test the generator set each week.

The exerciser can be programmed for specified exercise periods and is used to exercise the generator set automatically with or without load.

- The **PC service tool** is required to set the exercise parameters on transfer switches without the digital display.
- The **digital display** (when available) can be used to set exercise parameters for up to eight exercise periods and eight exceptions.

All controllers have a switch to enable or disable pre-set exercise routines. The pushbutton is located on the Digital Module above the batteries, next to the LED light bar display. This button is used by service personnel to disable unexpected transfers while servicing the switch.

NOTICE
If a power failure occurs during the exercise routine, the controller overrides the routine and transfers the load.

4.5 Planned Maintenance

Performing the annual planned maintenance procedures increases reliability of the transfer switch.

The following procedures must only be done by technically qualified personnel, according to procedures in the Service Manual. If repair or component replacement is necessary, call your dealer or distributor.

⚠ WARNING

AC power within the cabinet and the rear side of the cabinet door presents a shock hazard that can cause severe personal injury or death. Incorrect installation, service or parts replacement can result in severe personal injury, death and/or equipment damage. All corrective service procedures must be done only by technically qualified personnel, according to procedures in the Service Manual.

⚠ WARNING

The transfer switch presents a shock hazard that can cause severe personal injury or death unless all AC power is removed. Be sure to set the generator set operation selector switch to Stop, disconnect AC line power, disconnect the battery charger from its AC power source and disconnect the starting battery (negative [-] lead first) before servicing.

⚠ WARNING

Ignition of explosive battery gases can cause severe personal injury. Do not smoke or cause any spark, arc or flame while servicing batteries.

TABLE 2. PLANNED MAINTENANCE

Disconnect All Sources of AC Power: 1. Disconnect both AC power sources from the transfer switch before continuing. Turn the generator set operation selector switch to Stop. (The selector switch is located on the generator set control panel.) 2. If there is an external battery charger, disconnect it from its AC power source. Then disconnect the set starting battery (negative [-] lead first).
Clean: 1. Thoroughly dust and vacuum all controls, meters, switching mechanism components, interior buswork and connecting lugs. 2. Close the cabinet door and wash exterior surfaces with a damp sponge (mild detergent and water). **⚠ WARNING** ***Do not allow water to enter the cabinet, especially at meters, lamps and switches.***

Inspect:

1. Check bus work and supporting hardware for carbon tracking, cracks, corrosion or any other types of deterioration. If replacement is necessary, contact your dealer or distributor.
2. Check stationary and movable contacts. If contact replacement is necessary, contact your dealer or distributor.
3. Check system hardware for loose connections.
4. Check all control wiring and power cables (especially wiring between or near hinged door) for signs of wear or deterioration.
5. Check all control wiring and power cables for loose connections.
6. Check the cabinet interior for loose hardware.

Perform Routine Maintenance:

1. Tighten bus work, control wiring, power cables and system hardware as necessary.

NOTICE
Hardware torque values are given in the Service Manual.

2. Re-torque all cable lug connections.

NOTICE
Lug torque requirements are listed in the Service Manual.

Connect AC Power and Check Operation:

1. Connect the set starting battery (negative [-] lead last). Connect the utility AC power source, enable the generator set power source. If applicable, connect power to the battery charger.
2. Verify proper operation of the battery charger.
3. Test system operation as described in this section. Close and lock the cabinet door.

5 Digital Display Menu System

This section describes the Digital Display Menu System and navigation through the menus. The menus display status information, events, and setup menus. Setup menus contain parameters with adjustable values. The descriptions in this section include ranges for the parameters and default values. The digital display is an option with Level 1 controls and is standard with Level 2 controls. The system menus can also be accessed with the PC service tool.

The Digital Display Menu System is a 2-line by 20-character graphical display screen and six buttons. The screen or menu displays status information, parameters, events and messages. The buttons change screens and parameters. Two buttons have names: Home and Previous Menu. These buttons are used for navigation. Messages include navigational indicators for the other four buttons.

5.1 Main Menus

The main menu system consists of three top-level menus that list vertical menus (or submenus). The submenus display status information. This information cannot be changed in the main menus. The main menus contain eight submenus including the Setup Menus.

5.2 Password and Setup Menus

Before you can navigate and change setup parameters, you must enter a password; however, you can bypass the password and examine but not change parameters. When parameters are changed in any setup menu, you are prompted to either save the changes or restore the old values.

5.3 Navigation

The following image represents the typical functions of the Main Menu navigational buttons.

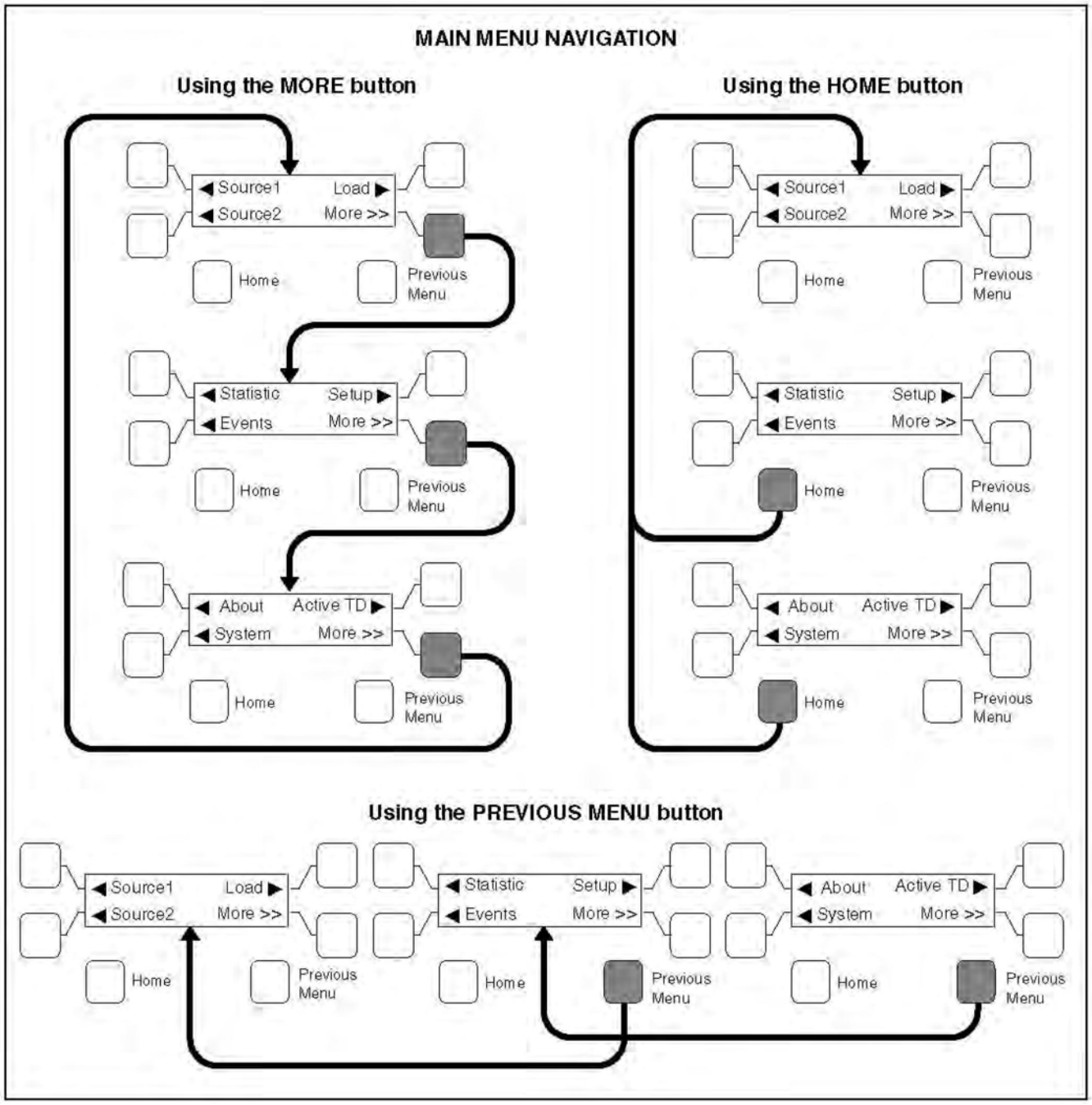

FIGURE 52. NAVIGATION

5.4 Main Menu Descriptions

5.4.1 First Main Menu

- The Source 1 and Source 2 buttons move between submenus that monitor aspects to both power sources:
  - Line-to-Line Voltage

- Frequency
- Source Connected
- Running Time

- Pressing the Home button returns to the First Main Menu display within any of the Source 1, Source 2, or Load submenus.
- The Load button moves through submenus to display information on the load connected source:
  - Voltage Output
  - Amps and Frequency
  - Power Factor and Output
- The More button advances to the Second Main Menu.
- The Previous Menu button is not active at this level.

5.4.1.1 Source 1 and Source 2 Submenus

Use the push button to the left of the display screen to navigate through the following screens:

- **Volts L12 L23 L31**:
  - The Level 1 control will only read line-to-line voltages.
  - The Level 2 control is capable of reading line-to-line and line-to-neutral voltages, depending on the application.
  - Source 1 and Source 2 reads three-phase voltage for three-phase systems and single-phase voltage for single-phase systems.
  - The Level 1 control will only read single-phase voltages for Source 2.
    - If the voltage is measured at 10 volts or less, the display reads 0.
    - On Level 1 controllers (Source 2), only one voltage will be displayed at L12.
    - On Level 1 controllers (Source 1), displays 3-phase voltage for 3-phase systems or single-phase voltage for single-phase systems.
- **Volts L1N L2N L3N**:
  - Level 2 reads line-to-neutral voltages, level 1 will not
    - Numbers do not display if the system has no neutral.
    - This screen does not display with Level 1 controllers
- **Frequency**: Displays the sensed line frequency for Source 1 or Source 2.
- **Source 1 (or 2)**: Displays the position of contactors for either Source 1 or Source 2.
- **Run Time Source 1 (2)**: Displays the total time the transfer switch has been connected to either Source 1 or Source 2.

5.4.1.2 Load Submenus

NOTICE
This subset is not available on Level 1 Controls and is optional on Level 2 Controls.

Use the Source 1 and Source 2 push button to the left of the display screen to navigate through the following screens:

- **Volts L12 L23 L31**: Line-to-Line Load Voltage Screen
- **Volts L1N L2N L3N**: Line-to-Neutral Voltage for Load
- **Amps L1 L2 L3**: Line Currents for Load
- **Frequency**: Sensed line frequency for Load connected source
- **Real Power kW**: Real Power of the transfer switch
- **Apparent Power KVA**: Total Apparent Power of the transfer switch
- **Power Factor**: Average Power Factor of the transfer switch. This will be displayed as lead or lag.
- **Neutral Current**: Neutral Current of the transfer switch.

5.4.2 Second Main Menu

- The Statistic button displays information about either source:
  - Run Time
  - Average Transfer Time
  - Total Number of Transfers
  - Total Number of Failures
  - Battery and (optional) Charger status
  - Control on Time
- The Events button displays the last 50 events or fault codes recorded on the controller.
- The Home button returns to the First Main Menu.
- The Setup button enters the password protected adjustment program:
  - Adjust Sensors
  - Set Time Delays
  - Test and Exercise
  - Exercise Exceptions
  - Transition Mode Trim
  - Load Sequencer Enable
- The More button advances to the Third Main Menu.
- The Previous Menu button returns to the First Main Menu.

5.4.2.1 Events Submenus

The Events program displays information about either source. The controller stores and records the last fifty events in chronological order, beginning with the most recent event. The date and time are listed with each event.

* Indicates that the event is currently active.

Use the push button to the left of the display screen to navigate through the screens.

5.4.2.2 Setup Submenus

The Setup button enters the password-protected adjustment programs to:

- Adjust Sensors
- Set Time Delays
- Test and Exercise
- Exercise Exceptions
- Transition Mode Trim
- Load Sequencer Enable

5.4.2.2.1 Entering the Password Program

Press the Setup button to access the Enter Password menu.

The password is 574.

1. Use the + and - buttons to select a number.
2. Use the right arrow button to move the cursor to the next field.
3. When the password is set, press the right triangle button to enter the Setup program.

5.4.3 Third Main Menu

- The About button displays general information about the transfer switch and controller.
- The System button provides access to data from surrounding devices communicating through a LonWorks network. If the optional network card is not included with the transfer switch, the System button is not active.
- The Home button returns to the First Main Menu.
- The Active TD button displays all active time delays.
- The More button returns the display to the First Main Menu.
- The Previous Menu button returns to the Second Main Menu.

5.4.3.1 About Submenus (Prior to Software Version 1.20.250)

The About submenus contain read-only information about the transfer switch and controller.

- **Name of Switch**: Displays the name of the switch as defined in the Event Handling Requirement.
- **Software Version**: Displays the current firmware version of the controller.
- **Build Date**: Displays the manufacturing date of the controller.
- **ATS Configuration**: Displays the configuration of the controller. Changes are made by servicing personnel using the PC service tool.

  Data:

  - Test Mode
  - Util-Gen
  - Utility-Utility
  - Genset-Genset

- Unknown

- **ATS Type**: Displays the mode of operation the control is using. Adjustments can be made by service personnel using the PC service tool.

  Data:

  - OT = Open Transition
  - BT = Bypass Transition
  - Unknown

- **ATS Board Level**: Displays the ATS board level (1 or 2).

NOTICE
This menu was not included in early versions of software.

- **Network Module**: This screen indicates if a Network Communications Module is installed and enabled.
  - Hardware Detected + Software Enabled = OK
  - Hardware NOT Detected + Software Enabled = Not Installed
  - Hardware Detected + Software NOT Enabled = Not Enabled
  - Hardware NOT Detected + Software NOT Enabled = Not Available
- **Relay Module**: This screen indicates if the Relay Module hardware is installed.

  Data:

  - OK
  - Not Installed
- **Load Module**: This screen indicates if the Load Current Module hardware is installed. This feature is not available on Level 1 Controllers.

  Data:

  - OK
  - Not Installed

5.4.3.2 About Submenus (Software Version 1.20.250 and Greater)

The About submenus contain read-only information about the transfer switch and controller.

- **Name Tag**: Displays the name of the switch as defined in the Event Handling Requirement.
- **Software Version**: Displays the current firmware version of the controller.
- **Bootcode Version**: Displays the current bootcode version of the controller.
- **Build Date**: Displays the manufacturing date of the controller.
- **Switch Mechanism**: Displays the switch mechanism of the controller.
- **ATS Configuration**: Displays the configuration of the controller. Changes are made by servicing personnel using the PC service tool.

Data:

- Off line
- Util-Gen
- Util-Util
- Gen-Gen

- **ATS Type**: Displays the mode of operation the control is using. Adjustments can be made by service personnel using the PC service tool.

  Data:

  - OT = Open Transition
  - BT = Bypass Transition

- **ATS Board Level**: Displays the ATS board level (1 or 2).
- **Network Module**: This screen indicates if a Network Communications Module is installed and enabled.
  - Hardware Detected + Software Enabled = OK
  - Hardware NOT Detected + Software Enabled = Not Installed
  - Hardware Detected + Software NOT Enabled = Not Enabled
  - Hardware NOT Detected + Software NOT Enabled = Not Available
- **Relay Module**: This screen indicates if the Relay Module hardware is installed.

  Data:

  - OK
  - Not Installed

- **Load Module**: This screen indicates if the Load Current Module hardware is installed. This feature is not available on Level 1 Controllers.

  Data:

  - OK
  - Not Installed

5.4.3.3 Active TD Submenus (Prior to Software Version 1.12)

- **Test in Process**: Shows time delay activity, the type of time delay and a countdown. If there is no active time delays, the message "No Timer Active" is displayed.

NOTICE
Active TD menus were not available in early versions of software.

5.4.3.4 Active TD Submenus (Software Version 1.12 and Greater)

The Active TD submenus generally show the time delay activity, type of time delay and countdown. This is not specific to the Test in Process submenu.

- **TDNE**: Pressing the Active TD menu button shows that TDNE is one of the active time delays enabled in the control.
- **Changeover in**: This menu shows a Preferred Source Changeover Timer and remaining time (Utility-to-Utility and Genset-to-Genset applications only).
- **No Timer Active**: This message is displayed only if there are no active time delays.

5.4.4 Setup Menu Navigation and Description

5.4.4.1 Setup Group 1

This group allows programming the operational parameters of the switch for Source 1 and Source 2.

The Sensor submenus are used for setting the:

- Phase Type
- Nominal Type
- Under-voltage Settings
- Over-voltage Settings
- Time Delays
- Frequency Settings
- Imbalance Settings
- Phase Loss
- Phase Rotation

The Sync Check sensor submenus allow programming synchronous conditions for Source 1 and Source 2 that must be met before transferring from one to the other source.

5.4.4.1.1 Sensor 1 and Sensor 2 Submenus (Prior to Software Version 1.12)

When entering numerical values:

Use the + and - buttons to select numerical values or toggle through a list of selections.

When entering numerical values, the - button lowers the value to its lowest range, then begins again at the top end of the range. The + button increases the value to its highest range, then begins again at the low end of the range.

Use the right-facing arrow button to move the cursor to the next field.

- **Sensor 1 and Sensor 2**: These submenus are identical, except:
  - S1 refers to Source 1
  - S2 refers to Source 2

NOTICE

For 2-wire system, select 1 phase-2 wire.
For a single phase-3 wire system, select 1 phase-3 wire.
For a 3 phase system, select 3 phase.

- **S1 or S2 Nominal Voltage**: System voltage for Source 1 or Source 2. Enter the system voltage between 110 and 600 VAC.

NOTICE

Level 1 Controls are Line-to-Line voltages and Level 2 Controls are Line-to-Neutral voltages.

- **S1 or S2 UV Pickup**: Under-Voltage sensor pickup for Source 1 or Source 2. Enter a number between 85 and 100% of the nominal voltage (Default 90%).
- **S1 or S2 UV Dropout**: Under-Voltage sensor dropout voltage. Enter a number between 75 and 98% of the under-voltage pickup percentage (Default 90%).
- **S1 or S2 UV Time Delay**: Under-Voltage dropout time delay. Enter a time between 0.0 and 1.0 seconds (Default 0.5 seconds).
- **S1 or S2 OV Enable**: Over-Voltage sensing enable. Choose Enabled or Disabled (Default Enabled).
- **S1 or S2 OV Pickup**: Over-Voltage pickup. This adjusts the over-voltage pickup as a percentage of the over-voltage dropout. Enter a number between 95 and 99% (Default 95%).
- **S1 or S2 OV Dropout**: Over-Voltage dropout. Enter a percentage between 105 and 135% of the nominal voltage (Default 110%).
- **S1 or S2 OV Time Delay**: Over-Voltage time delay. Enter a range between 0.5 and 120 seconds (Default 3 seconds).
- **S1 or S2 Frequency Sensor**: Monitors line frequency on A-Phases of both sources (Default Enabled).
- **Nominal Frequency**: Enter a frequency between 45 and 65 Hz (Default 60 Hz).
- **Frequency Pickup**: Enter a percentage between 5 and 20% of the nominal frequency (Default 10%).
- **Frequency Dropout**: Enter a percentage between 2 and 5% of the frequency pickup (Default 1%).
- **Frequency Delay**: Enter a time between 0.1 and 15.0 seconds (Default 5 seconds).
- **S1 or S2 Imbalance Sensor** (Level 2 Controllers Only): Detects unbalanced voltages on 3-phase sources (Default Disabled).
- **Imbalance Dropout** (Level 2 Controllers Only): Enter a percentage between 2 and 10% (Default 5%).
- **Imbalance Delay** (Level 2 Controllers Only): Enter a time between 2 and 20 seconds (Default 5 seconds).
- **S1 or S2 Loss of Phase** (Level 2 Controllers Only): The loss of single phase sensing can be enabled or disabled (Default Disabled).

- **Phase Rotation** (Level 2 Controllers Only): The phase rotation sensing can be enabled or disabled (Default Enabled).

5.4.4.1.2 Sensor 1 and Sensor 2 Submenus (Software Version 1.12 and Greater)

When entering numerical values:

Use the + and - buttons to select numerical values or toggle through a list of selections.

When entering numerical values, the - button lowers the value to its lowest range, then begins again at the top end of the range. The + button increases the value to its highest range, then begins again at the low end of the range.

Use the right-facing arrow button to move the cursor to the next field.

- **Sensor 1 and Sensor 2**: These submenus are identical, except:
  - S1 refers to Source 1
  - S2 refers to Source 2

NOTICE
For a single-phase, 2-wire system, select 1 phase-2 wire. **For a single phase-3 wire system, select 1 phase-3 wire.** **For a 3 phase system, select 3 phase.**

- **Delta or Wye Conn** (Level 2 Controllers Only): Delta or Wye configuration. This menu is only displayed with Level 2 controllers. Chose Delta or Wye.
- **S1 or S2 Nominal Voltage**: System voltage for Source 1 or Source 2. Enter the system voltage between 110 and 600 VAC.

NOTICE
Level 1 Controls are Line-to-Line voltages and Level 2 Controls are Line-to-Neutral voltages.

- **S1 or S2 UV Pickup**: Under-Voltage sensor pickup for Source 1 or Source 2. Enter a number between 85 and 100% of the nominal voltage (Default 90%).
- **S1 or S2 UV Dropout**: Under-Voltage sensor dropout voltage. Enter a number between 75 and 98% of the under-voltage pickup percentage (Default 90%).
- **S1 or S2 UV Time Delay**: Under-Voltage dropout time delay. Enter a time between 0.0 and 4.0 seconds (Default 0.5 seconds).
- **S1 or S2 OV Enable**: Over-Voltage sensing enable. Choose Enabled or Disabled (Default Enabled).
- **S1 or S2 OV Pickup**: Over-Voltage pickup. This adjusts the over-voltage pickup as a percentage of the over-voltage dropout. Enter a number between 95 and 99% (Default 95%).
- **S1 or S2 OV Dropout**: Over-Voltage dropout. Enter a percentage between 105 and 135% of the nominal voltage (Default 110%).
- **S1 or S2 OV Time Delay**: Over-Voltage time delay. Enter a range between 0 and 120 seconds (Default 3 seconds).

- **S1 or S2 Frequency Sensor**: Monitors line frequency on A-Phases of both sources (Default Enabled).
- **Nominal Frequency**: Enter a frequency between 45 and 65 Hz (Default 60 Hz).
- **Frequency Pickup**: Enter a percentage between 5 and 20% of the nominal frequency (Default 10%).
- **Frequency Dropout**: Enter a percentage between 1 and 5% of the frequency pickup (Default 1%).
- **Frequency Delay**: Enter a time between 0.1 and 15.0 seconds (Default 5 seconds).
- **S1 or S2 Imbalance Sensor** (Level 2 Controllers Only): Detects unbalanced voltages on 3-phase sources (Default Disabled).
- **Imbalance Dropout** (Level 2 Controllers Only): Enter a percentage between 2 and 10% (Default 4%).
- **Imbalance Delay** (Level 2 Controllers Only): Enter a time between 2 and 20 seconds (Default 5 seconds).
- **S1 or S2 Loss of Phase** (Level 2 Controllers Only): The loss of single phase sensing can be enabled or disabled (Default Disabled).
- **Phase Rotation** (Level 2 Controllers Only): The phase rotation sensing can be enabled or disabled (Default Enabled).

5.4.4.2 Setup Group 2

The Time Delay submenus allow programming time for the:

- Engine Start
- Power Source 1 to Source 2
- Power Source 2 to Source 1
- Engine Cool-down
- Programmed Transition
- Elevator Pre-Transfer
- Generator set-to-Generator set Engine Controls

Test submenus allow programming the front panel test switch to test the source with or without load. If the configuration is genset-to-genset, Source 1 or Source 2 is selectable.

Exerciser submenus allows programming an exercise routine for Power Source 2 and are available only on utility-to-genset controls. The number of exercise programs that can be set is dependent upon the software version installed and the type of control. Exerciser submenus also allow for adding and deleting exercise exceptions. Up to 8 routines and exceptions can be programmed using the PC service tool.

5.4.4.2.1 Time Delay Submenus (Prior to Software Version 1.12)

When entering numerical values:

Use the + and - buttons to select numerical values or toggle through a list of selections.

When entering numerical values, the - button lowers the value to its lowest range, then begins again at the top end of the range. The + button increases the value to its highest range, then begins again at the low end of the range.

Use the right-facing arrow button to move the cursor to the next field.

- **TDNE**: In a Normal to Emergency transfer this function allows Source 2 to stabilize before the load is applied. Enter a time from 0 to 120 seconds (Default 10 seconds).
- **TDEN**: In an Emergency to Normal transfer this allows Source 1 to stabilize before retransfer. Enter a time from 0 to 30 minutes (Default 10 minutes).
- **TDESa**: Sets the time delay for Engine Start on generator set (a) used in utility-generator and generator-generator mode. Prevents nuisance generator set starting during brief power interruptions. This menu does not appear in utility-to-utility installations. Enter a range from 0 to 120 seconds (Default 3.0 seconds).
- **TDECa**: Sets the time delay for Engine Cool-down following a retransfer. This menu does not appear in utility-to-utility installations. Enter a time from 0 to 30 minutes (Default 10 minutes).
- **TDPT**: Sets the time delay for programmed transition, a setting of 0.0 disables the program. Enter a time from 0 to 60 seconds (Default 0 seconds).
- **TDEL**: Sets the time delay to wait for an elevator pre-transfer signal. Enter a time from 0 to 60 seconds (Default 0 seconds).
- **TDESb** (Level 2 Controllers Only): Sets the Engine Start time delay for generator set (b). Enter a time from 0 to 120 seconds (Default 3 seconds).
- **TDECb** (Level 2 Controllers Only): Sets the time delay for Engine Cool-down to begin. Enter a time of 0 to 30 minutes (Default 10 minutes).
- **Changeover Enable** (Level 2 Controllers Only):Changeover Enabled/Disabled. Select Enabled or Disabled.
- **Changeover Delay** (Level 2 Controllers Only): If Changeover Enabled is enabled, this menu sets the amount of time a single generator can be run before switching to the other generator. Enter a time from 1 to 336.0 hours (Default 24 hours).

5.4.4.2.2 Time Delay Submenus (Software Version 1.12 and Greater)

When entering numerical values:

Use the + and - buttons to select numerical values or toggle through a list of selections.

When entering numerical values, the - button lowers the value to its lowest range, then begins again at the top end of the range. The + button increases the value to its highest range, then begins again at the low end of the range.

Use the right-facing arrow button to move the cursor to the next field.

NOTICE
TDNE, TDESa, TDESb, TDEL and TDPT values up to 20 seconds are adjustable in 1 second increments. Values over 20 seconds are adjustable in 5 second increments.

NOTICE
For long engine start time delays (over 15 seconds) a remote battery source should be used.

- **TDNE**: In a Normal to Emergency transfer this function allows Source 2 to stabilize before the load is applied. Enter a time from 0 to 120 seconds (Default 10 seconds).

- **TDEN**: In an Emergency to Normal transfer this allows Source 1 to stabilize before retransfer. Enter a time from 0 to 30 minutes (Default 10 minutes).
- **TDESa**: Sets the time delay for Engine Start on generator set (a) used in utility-generator and generator-generator mode. Prevents nuisance generator set starting during brief power interruptions. This menu does not appear in utility-to-utility installations. Enter a range from 0 to 120 seconds (Default 3.0 seconds).
- **TDECa**: Sets the time delay for Engine Cool-down following a retransfer. This menu does not appear in utility-to-utility installations. Enter a time from 0 to 30 minutes (Default 10 minutes).
- **TDPT**: Sets the time delay for programmed transition, a setting of 0.0 disables the program. Enter a time from 0 to 60 seconds (Default 0 seconds).
- **TDEL**: Sets the time delay to wait for an elevator pre-transfer signal. Enter a time from 0 to 60 seconds (Default 0 seconds).
- **TDESb** (Level 2 Controllers only, set as gen-to-gen): Sets the Engine Start time delay for generator set (b). Enter a time from 0 to 120 seconds (Default 3 seconds).
- **TDECb** (Level 2 Controllers only, set as gen-to-gen): Sets the time delay for Engine Cool-down to begin. Enter a time of 0 to 30 minutes (Default 10 minutes).
- **Changeover Enable** (Level 2 Controllers only, set as gen-to-gen):Changeover Enabled/Disabled. Select Enabled or Disabled.
- **Changeover Delay** (Level 2 Controllers only, set as gen-to-gen): If Changeover Enabled is enabled, this menu sets the amount of time a single generator can be run before switching to the other generator. Enter a time from 1 to 336.0 hours (Default 24 hours).

5.4.4.2.3 Test Submenus

The following menu is used only in Utility-to-Genset applications

- **With/Without Load**: Allows an operator to automatically test the transfer switch, generator and power system.
    - Sets the function of the Test Switch on the front panel (Default Test with Load).

The following menu is used only in Genset-to-Genset and Utility-to-Utility applications

- **Source 1/Source 2**: Allows for the selection of the preferred source (Default Source 1, gen-to-gen and utility-to-utility only).

5.4.4.2.4 Exerciser Submenus (Software Versions Prior to 1.5.190)

These submenus are available only in Utility-to-Genset applications.

Only one program is available for Level 1 controllers.

- **Exercise Enable**: Enables or disables all the functions of exercising the generators(s).
- **Next Exercise**: Displays the time remaining until the next exercise cycle. This display is readable only when the exerciser is Enabled (may not be displayed in software version 1.0).
- **Program 1**: This screen allows disabling Exercise Program 1 only.
- **Start Day 1**: The first four programming submenus for the exercise cycle. Sets the day an exercise cycle will occur. Select a day between Sunday (0) and Saturday (6).

- **Start Time 1**: Sets a time for the exercise cycle to begin. Enter a time within a 24 hour period: hh=0 - 23, mm = 0-59.
- **Duration 1**: Sets the length of time the exercise cycle will run. Enter a time within a 24 hour period: hh=0 - 23, mm = 0-59.
- **Program 1 Repeat**: Sets an interval the exercise cycle will repeat. Enter a cycle between 0 and 52 weeks. Typical values are 1 or 2.
- **Exercise 1**: Enables or disables exercising the generator(s) with or without a load.

Level 2 controllers allow for two exercise programs to be set up from the Setup menu screen. Six additional programs and eight exceptions can be setup using the PC service tool.

- **Program 2** (Level 2 Controllers Only): This screen allows disabling Exercise Program 2 only.
- **Start Day 2** (Level 2 Controllers Only): Sets the day of the second exercise cycle. Enter a day between Sunday (0) and Saturday (6).
- **Start Time 2** (Level 2 Controllers Only): Sets the time the second exercise cycle will begin. Enter a time within a 24 hour period: hh=0-23, mm=0-59.
- **Duration 2** (Level 2 Controllers Only): Sets a time limit the second exercise cycle will run. Enter a time within a 24 hour period: hh=0-23, mm=0-59.
- **Program 2 Repeat** (Level 2 Controllers Only): Sets an interval the second exercise cycle will repeat. Enter a range from 0-52 weeks. Typical values are 1 or 2.
- **Exercise 2** (Level 2 Controllers Only): Enables or disables the second exercise program to run the generator(s) with or without load.

5.4.4.2.5 Exerciser Submenus (Software Versions 1.5.190 and Greater)

These submenus are available only in Utility-to-Genset applications.

Only one program is available for Level 1 controllers.

- **Exercise Feature**: Enables or disables all the functions of exercising the generators(s).

NOTICE
Instead of "Exercise Feature", this menu is titled "Exercise Enable" in some early versions of software. This menu is no longer included with current software.

- **Next Exercise In**: Displays the time remaining until the next exercise cycle. If no exercises are enabled, the message "No Next Exercise" is displayed.
- **Exercise 1 Enable**: This screen allows disabling Exercise 1 only (Default Disabled).
- **Exercise 1 Start**: The first four programming submenus for the exercise cycle. Sets the day an exercise cycle will occur. Select a day between Sunday (0) and Saturday (6). (Default Sunday)
- **Exercise 1 Start**: Sets a time for the exercise cycle to begin. Enter a time within a 24 hour period: hh=0 - 23, mm = 0-59. (Default 00:00)
- **Exercise 1 Duration**: Sets the length of time the exercise cycle will run. Enter a time within a 24 hour period: hh=0 - 23, mm = 0-59. (Default 00:00)
- **Exercise 1 Repeat**: Sets an interval the exercise cycle will repeat. Enter a cycle between 0 and 52 weeks. Typical values are 1 or 2. (Default 0 Weeks)

- **Exercise 1**: Enables or disables the first exercise program to run the generator(s) with or without a load. (Default Without Load)

Level 2 controllers allow for two exercise programs to be set up from the Setup menu screen. Six additional programs and eight exceptions can be setup using the PC service tool.

- **Exercise 2 Enable** (Level 2 Controllers Only): This screen allows disabling Exercise Program 2 only. (Default Disabled)
- **Exercise 2 Start** (Level 2 Controllers Only): Sets the day of the second exercise cycle. Enter a day between Sunday (0) and Saturday (6). (Default Sunday)
- **Exercise 2 Start** (Level 2 Controllers Only): Sets the time the second exercise cycle will begin. Enter a time within a 24 hour period: hh=0-23, mm=0-59. (Default 00:00)
- **Exercise 2 Duration** (Level 2 Controllers Only): Sets a time limit the second exercise cycle will run. Enter a time within a 24 hour period: hh=0-23, mm=0-59. (Default 00:00)
- **Exercise 2 Repeat** (Level 2 Controllers Only): Sets an interval the second exercise cycle will repeat. Enter a range from 0-52 weeks. Typical values are 1 or 2. (Default 0 Weeks)
- **Exercise 2** (Level 2 Controllers Only): Enables or disables the second exercise program to run the generator(s) with or without load. (Default Without Load)

5.4.4.2.6 Exerciser Exceptions Submenus (Software Versions 1.5.190 and Greater)

These submenus are available only in Utility-to-Genset applications.

Level 2 Controllers allow for adding and deleting exceptions to the two exercise programs set up from the Setup menu screen.

- **Exceptions Active**: Indicates the number of active exercise exceptions. If there are no active exceptions, the message "No Exceptions Active" is displayed.
- **Cancel Active Excpts**: This screen allows cancelling all exceptions (Default Normal).
- **Exception 1**: This screen allows enabling/disabling Exception 1 only (Default Disabled).
- **Excpt 1 Start Date**: Sets the month and day for Exception 1. Enter a starting date that the exerciser will not run: mo = 1-12, dy = 1-31.
- **Excpt1 Start Time**: Sets a time of day for Exception 1. Enter a starting time of day that the exerciser will not run: hr = 0-23, nm = 0-59.
- **Except 1 Duration**: Sets the time period that Exception 1 will override an exercise. Enter a time: dy = 1-31, hr = 2-23, mn = 0-59.
- **Exception 1 Repeat**: This screen allows enabling/disabling Exception 1 repeating (Default Disabled).
- **Exception 2** (Level 2 Controllers Only): This screen allows enabling/disabling Exception 2 only (Default Disabled).
- **Exception 2 Start Date** (Level 2 Controllers Only): Sets the month and day for Exception 2. Enter a starting date that the exercise will not run: mo = 1-12, dy = 1-31.
- **Excpt 2 Start Time** (Level 2 Controllers Only): Sets a time of day for Exception 2. Enter a time of day that the exercise will not run: hh=0-23, mm=0-59. (Default 00:00)
- **Except 2 Duration** (Level 2 Controllers Only): Sets the time period that Exception 2 will override an exercise. Enter a time: dy = 1-31, hr = 0-23, mn = 0-59.

- **Exception 2 Repeat** (Level 2 Controllers Only): This screen allows enabling/disabling Exception 2 repeating (Default Disabled).

5.4.4.2.7 Exerciser Submenus (Software Versions 1.12-1.13.244)

These submenus are available only in Utility-to-Genset applications.

Only one program is available for Level 1 controllers.

NOTICE
Level 2 controllers allow for two exercise programs to be set up from the Setup menu screen.

- **Exercise Feature**: Enables or disables all the functions of exercising the generators(s).

NOTICE
Instead of "Exercise Feature", this menu is titled "Exercise Enable" in some early versions of software. This menu is no longer included with current software.

- **Next Exercise In**: Displays the time remaining until the next exercise cycle. If no exercises are enabled, the message "No Next Exercise" is displayed.
- **Exercise 1 Enable**: This screen allows disabling Exercise 1 only (Default Disabled).
- **Exercise 1 Start**: The first four programming submenus for the exercise cycle. Sets the day an exercise cycle will occur. Select a day between Sunday (0) and Saturday (6). (Default Sunday)
- **Exercise 1 Start**: Sets a time for the exercise cycle to begin. Enter a time within a 24 hour period: hh=0 - 23, mm = 0-59. (Default 00:00)
- **Exercise 1 Duration**: Sets the length of time the exercise cycle will run. Enter a time within a 24 hour period: hh=0 - 23, mm = 0-59. (Default 00:00)
- **Exercise 1 Repeat**: Sets an interval the exercise cycle will repeat. Enter a cycle between 0 and 52 weeks. Typical values are 1 or 2. (Default 0 Weeks)

NOTICE
0 = exercise one time only **1 = exercise once a week** **2 = exercise every other week**

- **Exercise 1**: Enables or disables the first exercise program to run the generator(s) with or without a load. (Default Without Load)

Level 2 controllers allow for two exercise programs to be set up from the Setup menu screen. Six additional programs and eight exceptions can be setup using the PC service tool.

- **Exercise 2 Enable** (Level 2 Controllers Only): This screen allows disabling Exercise Program 2 only. (Default Disabled)
- **Exercise 2 Start** (Level 2 Controllers Only): Sets the day of the second exercise cycle. Enter a day between Sunday (0) and Saturday (6). (Default Sunday)

- **Exercise 2 Start** (Level 2 Controllers Only): Sets the time the second exercise cycle will begin. Enter a time within a 24 hour period: hh=0-23, mm=0-59. (Default 00:00)
- **Exercise 2 Duration** (Level 2 Controllers Only): Sets a time limit the second exercise cycle will run. Enter a time within a 24 hour period: hh=0-23, mm=0-59. (Default 00:00)
- **Exercise 2 Repeat** (Level 2 Controllers Only): Sets an interval the second exercise cycle will repeat. Enter a range from 0-52 weeks. Typical values are 1 or 2. (Default 0 Weeks)

NOTICE
0 = exercise one time only **1 = exercise once a week** **2 = exercise every other week**

- **Exercise 2** (Level 2 Controllers Only): Enables or disables the second exercise program to run the generator(s) with or without load. (Default Without Load)

5.4.4.2.8 Exerciser Exceptions Submenus (Software Versions 1.13.244-1.5.190)

These submenus are available only in Utility-to-Genset applications.

Level 1 Controllers allow for setting two exceptions and Level 2 Controllers allow for setting exceptions to the eight exercise programs setup from the digital display screen.

- **Exception Remaining**: Indicates the time remaining for the exception of the longest duration. If there are no active exceptions, the message "No Excepts Active" is displayed on the first line.
- **Cancel Active Excpts**: This screen allows cancelling all exceptions (Default Normal).
- **View/Edit Exception**: This screen allows for selecting an Exception and displaying its status. Enter a number between 1 and 8 (Default 1). If a password is not entered:
  - Only the View/Edit Exercise and View/Edit Exception menus can be modified.
  - When the View/Edit Exercise or View/Edit Exception menus are modified, the Save Changes/Cancel Changes submenu is displayed upon exiting the Exercise submenus.

NOTICE
The number selected here must match the Exercise number selected in the "View/Edit Exercise" menu.

- **Exception #**: This menu is used to enable/disable the Exception selected in the previous menu (Default Disabled)
- **Execpt 1 Start Date**: Sets the month and day for Exception 1. Enter a starting date that the exercise will not run: mo = 1-12, dy = 1-31.
- **Excpt 1 Start Time**: Sets a time of day for Exception 1. Enter a starting time of day that the exercise will not run: hr = 0-23, mn = 0-59.
- **Except # Duration**: Sets the time period that the exception will override the same numbered exercise. Enter a time: days = 1-31, hr = 0-23, mn = 0-59.
- **Exception # Repeat**: This menu allows for enabling/disabling repeating the Exception (Default Disabled).

5.4.4.3 Setup Group 3

The Mode submenu allows programming the type of transition the switch uses.

The Clock submenus program the time and date, as well as daylight savings time.

The Sequencer submenu displays the Load Sequencer software feature, available only with LonWorks Network Communication Module. This program allows the user to send a predetermined sequence of event announcements in a timed, sequential order to turn the load off and on.

5.4.4.3.1 Mode Submenu (Prior to Software Version 1.20.250)

Transfer Mode: The transfer mode is preset and cannot be changed.

5.4.4.3.2 Mode Submenu (Software Version 1.20.250 and Greater)

- **Transfer Mode**:
  - Program Transition
  - Open Sync Check

NOTICE
Available settings vary from genset to genset.

5.4.4.3.3 Clock Submenus

The Clock submenus allow the user to set the actual date and time, as well as select the Daylight Saving Time option.

- **Date**: Sets the actual day and date. Enter a month between Jan (1) and Dec (12), a date between 1 and 31 and a year between 1 and 9999.
- **Time**: Sets the actual time of day. Enter the actual time within a 24 hour period: hh = 1-23, mm = 0-59, ss = 0-59.
- **Daylight Saving**: Activates the Daylight Savings time option. Selecting Enabled automatically updates the clock +/- one hour on the appropriate days (Default Disabled).

NOTICE
The Daylight Savings Time program is set for North America. If you are anywhere outside of North America, the time should be changed manually.

  - The first Sunday in April - moves the time forward one hour.
  - The last Sunday in October - moves the time back one hour.

5.4.4.3.4 Sequencer Submenus

Sequencer is available only with the optional Network Communication Module. The module must be installed and enabled with the PC service tool before these screens are displayed.

- **Load Sequencer**: When enabled, allows event announcements to be sent to the transfer switch.
- **Sequence Activation**: Sets activation for certain operational modes. Choose Transfer, Re-transfer or All.

- **Sequence Length**: The control can activate a maximum of 8 relay output signals. Enter the number of relay output signals desired to activate: 1 through 8.
- **Output 1 Time Delay**: When Load Sequencer is triggered, the controller deactivates all remote relay output signals. Starting with Relay 1, the controller counts down the specified time delay, the activates Relay 1. Enter a time from 0 to 60 seconds.

  The process repeats until all relay signals have been sequenced. The maximum time delay for all 8 signals is 8 minutes.

NOTICE
Menus continue through Output 8, depending on the number of Sequence Lengths specified.

5.4.4.4 Changing Setup Parameters (Software Prior to Version 1.12)

Pressing the 1 phase-2 wire button in any submenu causes a cursor to appear in the location of the editable field. In most cases, there is only one field to edit.

Use the + and - buttons to select numerical values or to toggle through a list of selections.

Default values are shown in parenthesis.

Use the right-facing arrow button to move the cursor to the next field.

When entering numerical values, the - button lowers the value to its lowest range, then begins again at the top end of the range. The + button increases the value to its highest range, then begins again at the low end of the range.

If changes are made, press the right-facing arrow button to enter the new value and return to the previous menu.

Changing any data within the Setup submenus will invoke a Save/Restore screen when exiting the Setup submenu groups.

If the Previous Menu button is pressed during an editing session, the data will not be changed.

If the Home button is pressed during an editing session, the Save/Restore screen is invoked.

5.4.4.5 Changing Setup Parameters (Software Version 1.12 and Greater)

Pressing the 1 phase-2 wire button in any submenu causes a cursor to appear in the location of the editable field. In most cases, there is only one field to edit.

Use the + and - buttons to select numerical values or to toggle through a list of selections.

Default values are shown in parenthesis.

Use the right-facing arrow button to move the cursor to the next field.

When entering numerical values, the - button lowers the value to its lowest range, then begins again at the top end of the range. The + button increases the value to its highest range, then begins again at the low end of the range.

If changes are made, press the right-facing arrow button to enter the new value and return to the previous menu.

Changing any data within the Setup submenus will invoke a SAVE CHANGES/CANCEL CHANGES screen when exiting the Setup submenu groups.

If the PREVIOUS MENU button is pressed during an editing session, the data will not be changed.

If the Home button is pressed during an editing session, the SAVE CHANGES/CANCEL CHANGES screen is invoked.

6 Wiring Considerations for Closed Transition Switches

6.1 Wiring Considerations for Closed Transition Transfer Switches

There are two functions that should be used with closed transition transfer switches: The transfer and re-transfer inhibit functions should be used to prevent two switches from transferring at the same time and the fail to disconnect output of the relay signal module should be wired to the shunt trip of one of the breakers feeding the ATS to prevent extended paralleling of the two sources.

6.2 Re-transfer and transfer inhibit functions

In applications with more than one closed transition ATS, the transfer and re-transfer inhibit functions should be used to prevent multiple transfer switches from transferring at the same time. For example to prevent two switches from re-transferring from the genset to the utility at the same time wire the normally closed contact that indicates the first ATS is connected to the normal source into the retransfer inhibit input of the transfer switch that is intended to transfer second. Ground the common aux contact on the first switch so that the re-transfer inhibit input on the second switch is grounded when the first transfer switch is not connected to the normal source. This will inhibit the second switch from beginning its retransfer sequence (including all time delays) until after the first transfer switch has transferred back to the normal source. A similar wiring scheme can be used when transferring to the emergency source so that only one switch transfers at a time. Switch position indicators are available on the relay signal module which is included with all Cummins closed transition ATSmodels. **Figure 53** and **Figure 54** illustrate how this can be done with all of Cummins' closed transition transfer switch models.

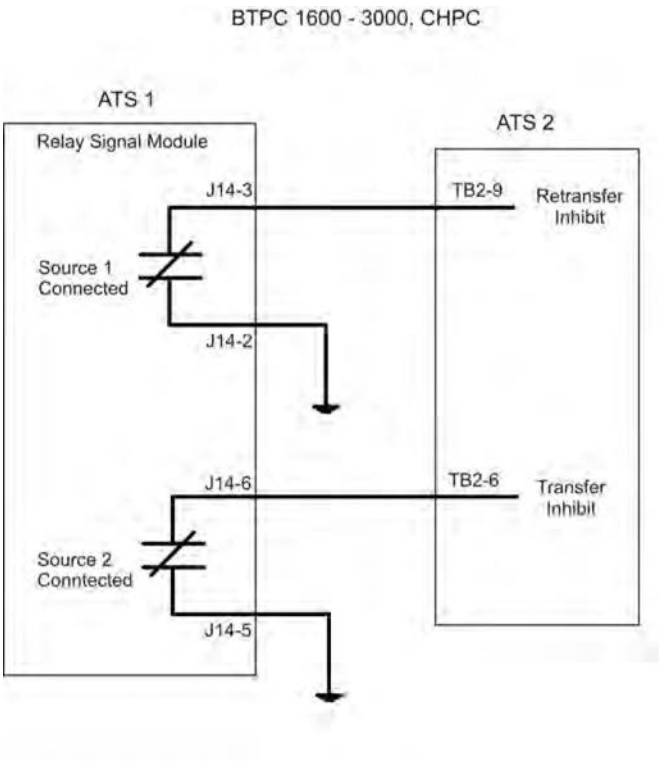

FIGURE 53. BTPC 1600-3000, CHPC

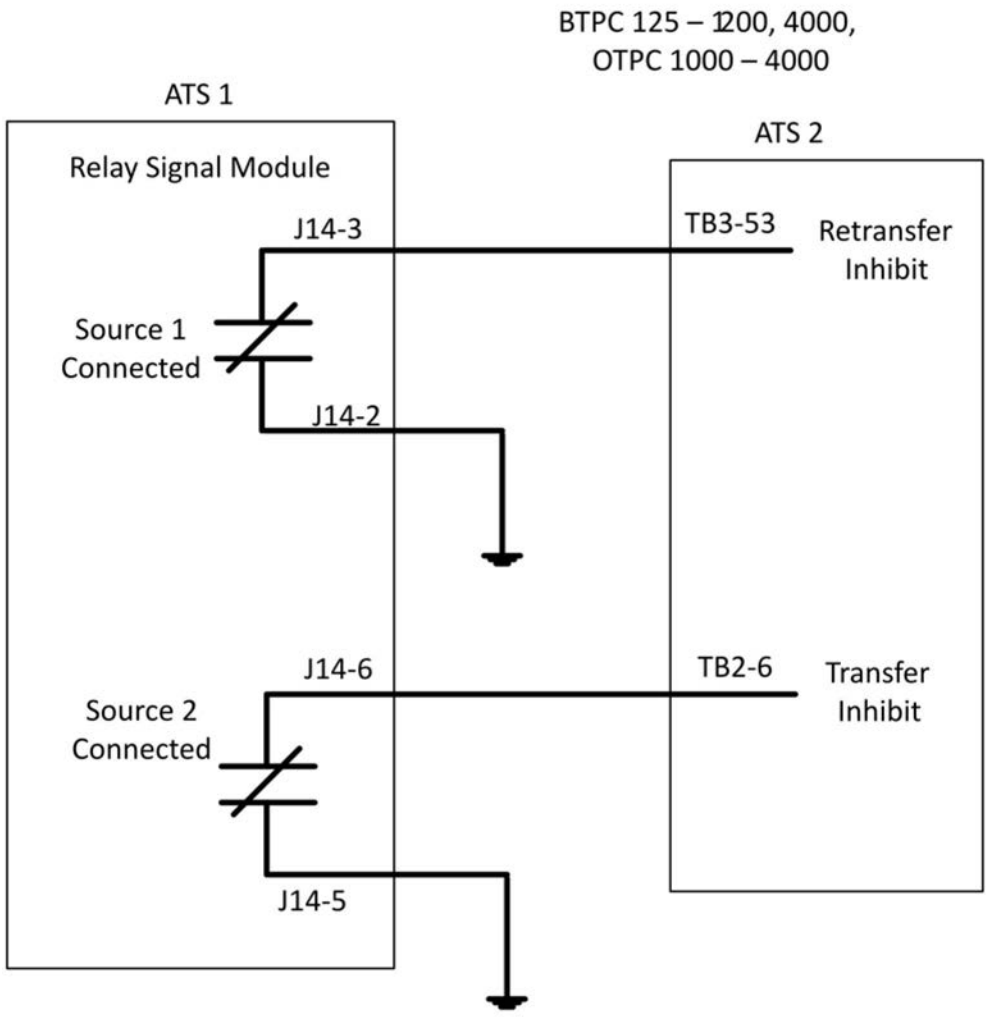

FIGURE 54. BTPC 125-1200, 4000, OTPC 1000-4000

6.3 Fail to disconnect

The Fail to Disconnect relay is active when the transfer switch remains connected to both sources for more than 100 msec during a closed transition transfer. It should be wired to the shunt trip of the breaker feeding the ATS on either the normal or the emergency side. The fail to disconnect relay is located on the relay signal module. See **Figure 55**.

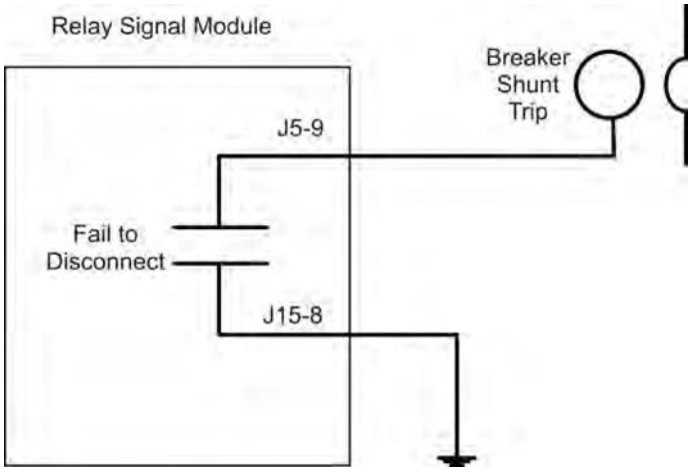

FIGURE 55. BREAKER SHUNT TRIP

7 Troubleshooting

7.1 Control Module LED Indicators and Switch

The digital module located on the inside of the switch enclosure door contains ten LED indicators. The indicators provide some information about the current control status. These indicators may be helpful in troubleshooting the transfer switch when the Digital Display is not available.

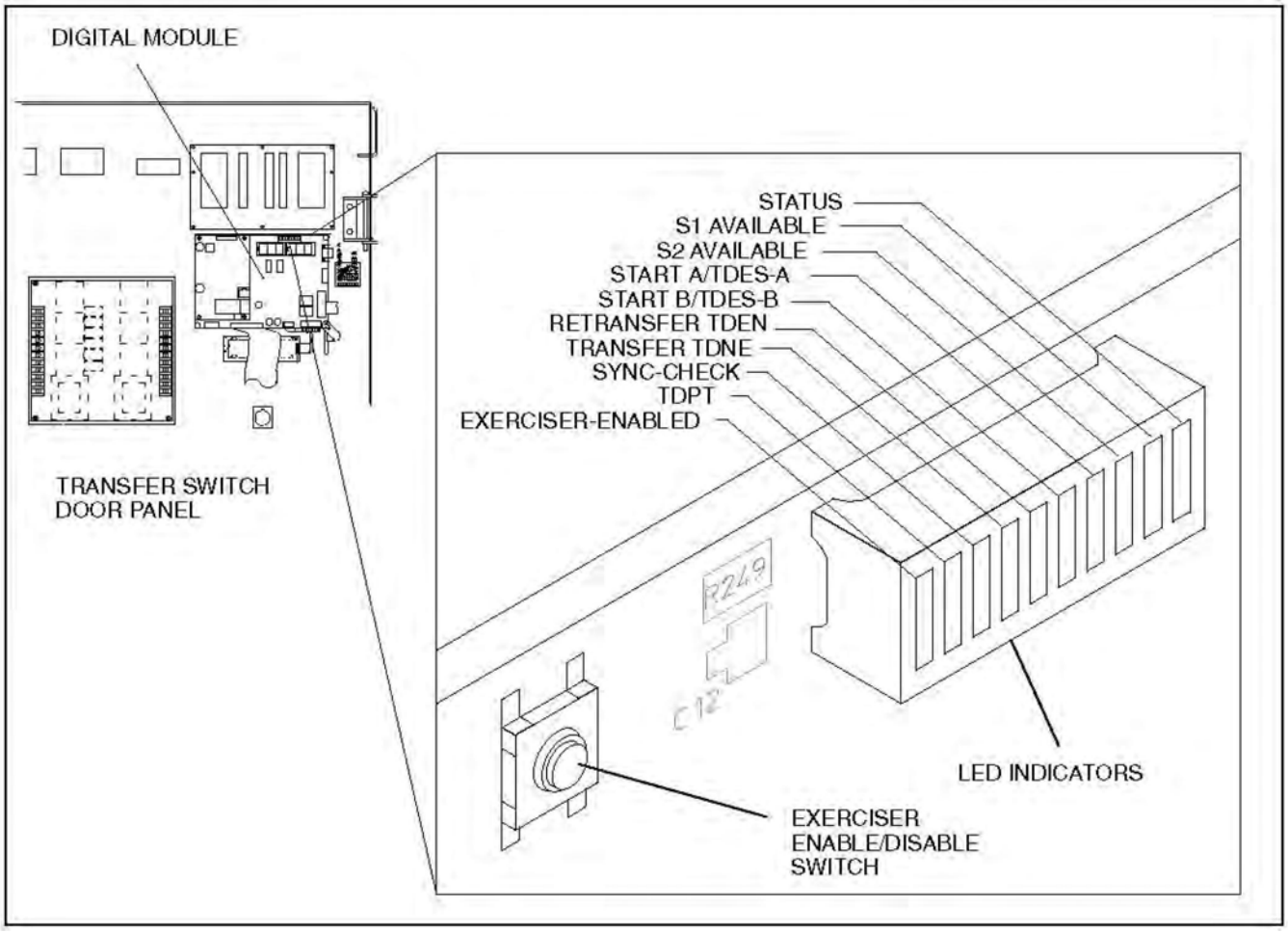

FIGURE 56. LED LOCATION ON DIGITAL MODULE (SHOWN ON THE 40 TO 125 AMP SWITCH)

TABLE 3. DIGITAL MODULE LED INDICATORS

Indicator	Definition
Status	Blinks at 1/2 Hz rate when the controller has power and the program is running without error. This indicator flashes the event code of an active event until the event is acknowledged with the Reset switch on the front panel. This indicator is sometimes referred to as the heart beat because it blinks constantly when the controller does not have an active event.
S1 Available	Lights when Power Source 1 has acceptable voltage and frequency limits. This indicator lights when the Source 1 Available indicator on the control panel lights.

Indicator	Definition
S2 Available	Lights when Power Source 2 has acceptable voltage and frequency limits. This indicator lights when the Source 2 Available indicator on the control panel lights.
Start A/TDES-A	1. Lights constantly when the control has commanded Source 2 to start 2. Blinks at 1/2 Hz rate during the time delay to engine start (TDESa)
Start B/TDES-B	This indicator is only used for genset-to-genset applications when Source 1 is a generator not a utility. 1. Lights constantly when the control has commanded Source 1 to start 2. Blinks at 1/2 Hz rate during the time delay to engine start (TDESb)
Retransfer/TDEN	1. Lights when the control energizes the Retransfer relay 2. Blinks at 1/2 Hz rate during the time delay to retransfer (TDEN)
Transfer/TDNE	1. Lights when the control energizes the Transfer relay 2. Blinks at 1/2 Hz rate during the time delay to transfer (TDNE)
Sync-Check	Blinks at 1-second rate when the in-phase sensor is active (maximum of 120 seconds).
TDPT	Time Delay Programmed Transition Blinks at 1/2 Hz rate during the programmed transition time delay
Exerciser Enabled	Lights when the Exerciser clock is enabled and blinks during an exercise period. The small switch next to the indicator enables and disables the exerciser. The operator can also enable and disable the exerciser from the Digital Display when it is available.

7.2 Fault Flash-Out

The control flashes an active fault code on the Digital Module Status indicator until it is acknowledged with the Reset switch on the front panel. The control flashes each digit of the fault code with a pause between digits and a longer pause between repetitions.

The control moves acknowledged events to the event history file. This file can hold a maximum of 50 fault and non-fault events. The digital display and the PC Service Tool can read the contents of the Event history file.

7.3 Exerciser Enable/Disable Switch

The Exerciser Enable/Disable switch enables the control to exercise the genset during future scheduled exercise periods and lights the Exerciser Enabled indicator or disables the scheduled exercise period and turns the indicator off. This button is used by service personnel to disable unexpected transfers while servicing the switch.

7.4 Troubleshooting Transfer Switch With the Digital Display

The Digital Display shows two types of events: fault events and non-fault events. The last 50 events, both fault and non-fault events, can be viewed with the Digital Display. You can also read all events in the event history file by using the PC Service Tool.

7.4.1 Fault Events

Fault events should be considered alarms for the transfer switch operator. They indicate that the transfer switch is not operating correctly.

7.4.1.1 Fault Codes and Messages

The following table lists the fault codes and fault message, and gives corrective actions for each fault code.

TABLE 4. FAULT CODES AND MESSAGES

343	Controller Checksum Error
441	Low Controller Battery
1113	ATS Fail to Close: Transfer
1114	ATS Fail to Close: Retransfer
597	Battery Charger Malfunction
477*	Network Battery Low
1468	Network Communications Error
* This fault code only applies to older transfer switches that included an Network Communications Module (NCM) with batteries.	

The controller displays the fault message on the Digital Display and flashes the asterisk indicator. You must press the Reset button on the control panel to acknowledge a fault and clear the display.

7.4.1.2 Troubleshooting Fault Codes

TABLE 5. TROUBLESHOOTING

⚠ WARNING ***Some ATS service procedures present hazards that can result in severe personal injury or death. Only qualified service personnel with knowledge of electricity and machinery hazards should perform service. See Safety Precautions.***
CONTROLLER CHECKSUM ERROR (343) The checksum of the Flash EPROM does not match the checksum stored in the controller
Corrective Action: 1. Reset the control by removing power. 2. Remove and re-install Digital Module batteries. 3. Contact Cummins/Onan Service if checksum error is repeated on power up. 4. Reset real-time clock.
LOW CONTROLLER BATTERY (441) Low Lithium battery voltage
Corrective Action: 1. Replace Digital Module batteries. 2. Press the Reset button on the front panel. 3. Reset real-time clock.

7.5 Fault Event Definitions

7.5.1 Controller Checksum Error

The controller checks the Flash EPROM checksum after each microprocessor reset. The checksum is stored in nonvolatile EEPROM. If a checksum error fault occurs, the controller still attempts a normal boot-up sequence.

The controller Fault Flash-out subsystem flashes this fault on the Status indicator until the fault is acknowledged (reset). Reset the control by removing power (including the batteries). If checksum error is repeated on power up, replace the Digital Module.

7.5.2 Low Controller Battery

The controller monitors the voltage of the Lithium batteries that supply power to the controller. If the battery voltage drops to 5 VDC, the controller sets the fault status to active.

The controller Fault Flash-out subsystem flashes this fault until the fault is acknowledged (reset).

7.5.3 ATS Fail to Close: Transfer

The controller first verifies that the transfer switch moved from Source 1 to Neutral within the time limit defined in the Fail to Close Time Delay. The controller also verifies that the transfer switch moved from Neutral to Source 2 within the time limit defined in the Fail to Close Time Delay.

If the Fail to Close time limit is exceeded, the controller changes the fault status to active. The fault remains active until the Reset button is pressed.

7.5.4 ATS Fail to Close: Re-Transfer

The controller first verifies that the transfer switch moved from Source 2 to Neutral within the time limit defined in the Fail to Close Time Delay. The controller also verifies that the transfer switch moved from Neutral to Source 1 within the time limit defined in the Fail to Close Time Delay.

If the Fail to Close time limit is exceeded, the controller changes the fault status to active. The fault remains active until the Reset button is pressed.

7.5.5 Battery Charger Malfunction

The controller monitors the status of the optional battery charger. If the Battery Charger Fault input is active, this event is active.

The controller Fault Flash-out subsystem flashes this fault until the fault is acknowledged (reset).

7.5.6 Network Battery Low

This event is detected by the optional Network Communications Module (NCM) and is communicated to the controller. If the battery voltage drops, the controller sets the fault status to active.

The controller Fault Flash-out subsystem flashes this fault on the Status indicator until the fault is acknowledged (reset).

7.5.7 Network Communications Error

This event is detected by the Network Communications Module (NCM) and is communicated to the transfer switch controller. This indicates that the device is no longer communicating with other devices on the network.

The controller Fault Flash-out subsystem flashes this fault until the fault is acknowledged (reset).

7.6 15/12-Amp Battery Charger Troubleshooting and Faults

The 15/12-amp battery charger includes one set of Form-B alarm contacts (corresponding to the status LED on the control panel). When red, this LED indicates a fault condition. The control panel also displays fault codes.

When a fault occurs, the red fault LED lights and a brief description of the fault and the numeric fault code is displayed on the digital display. To correct the fault, find the fault code number and take the suggested corrective actions. If the problem persists, call an authorized Cummins Power Generation distributor for help.

7.6.1 Clearing Faults

Most displayed faults are cleared by removing the fault. However, faults 379 - OVER CURR, 442 - HIGH BATT VOLT, and 9115 - BATT FAIL can only be cleared by cycling completely through the Setup menus or by powering down the charger after the fault is corrected. (More information on Setup menus is included in the Battery Charger Operator's Manual.)

7.6.2 Fault Alarm Output Connector

The battery charger includes a fault output relay that is activated (contacts close) when faults occur. The contacts are rated at 2 amps/30 VDC. This feature can be used by wiring a fault indicator to the fault alarm output connector located on the front of the battery charger. A 2-pin plug connector (323-1678-02) is shipped with the 15/12-amp transfer switch battery charger.

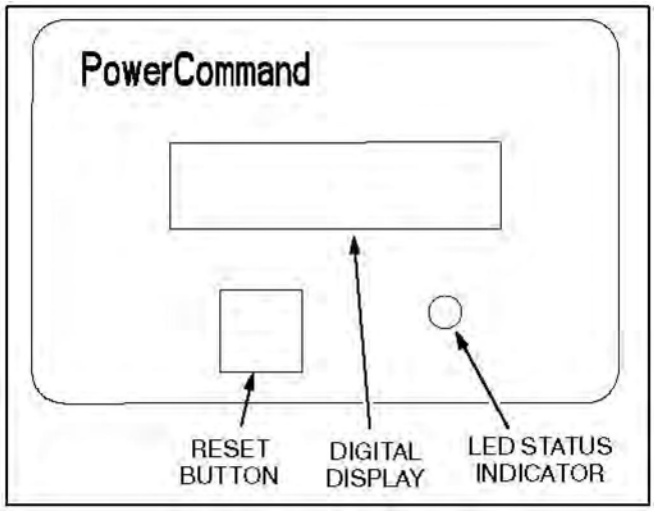

FIGURE 57. 15/12-AMP CHARGER CONTROL PANEL

7.7 Code 101 – Source 1 Connected (Event)

Logic:

Source 1 is connected to the transfer switch.

Description:

This event is active whenever the Source 1 position input is active. There is an associated LED output on the front panel, a relay output on the Relay Module, and a Digital Display screen that also indicate Source 1 is connected.

Possible Cause:

Source 1 limit switch feedback indicates switch position closed.

Diagnosis and Repair:

No further action required.

7.8 Code 102 – Source 1 Available (Event)

Logic:

Source 1 has reached the specified voltage and frequency targets.

Description:

This event is active whenever the Source 1 sensors (over/under voltage, over/under frequency, phase rotation, loss of phase, voltage imbalance) indicate that Source 1 is within acceptable limits. There is an associated LED output on the front panel and a relay output on the Relay Module.

Possible Causes:

1. Voltage feedback is within specification of the voltage select.
    a. Level 1, nominal voltage is line-to-line.
    b. Level 2, nominal voltage is line-to-neutral.
2. Frequency feedback is within specification of the frequency select.

Diagnosis and Repair:

No further action required.

7.9 Code 103 – Source 2 Connected (Event)

Logic:

Source 2 is connected to the transfer switch.

Description:

This event is active whenever the Source 2 position input is active. There is an associated LED output on the front panel, a relay output on the Relay Module, and a Digital Display screen that also indicate Source 2 is connected.

Possible Cause:

Source 2 limit switch feedback indicates switch position closed.

Diagnosis and Repair:

No further action required.

7.10 Code 104 – Source 2 Available (Event)

Logic:

Source 2 has reached the specified voltage and frequency targets.

Description:

This event is active whenever the Source 2 sensors (over/under voltage, over/under frequency, phase rotation, loss of phase, voltage imbalance) indicate that Source 2 is within acceptable limits. There is an associated LED output on the front panel and a relay output on the Relay Module.

Possible Causes:

1. Voltage feedback is within specification of the voltage select.
    a. Level 1, nominal voltage is line-to-line.
    b. Level 2, nominal voltage is line-to-neutral.
2. Frequency feedback is within specification of the frequency select.

Diagnosis and Repair

No further action required.

7.11 Code 105 – Emergency Start A (Event)

Logic:

Source A has received a start command from the transfer switch.

Description:

This event is active whenever the controller requires the Source 2 genset to start and reach rated speed — otherwise known as an emergency start. There is also a discrete output called Emergency Start A. Conditions which may prompt an emergency start are loss of nominal voltage or frequency of Source B, a test in progress with Source A as preferred source, or exercise transfer switch with Source A as the preferred source.

Possible Causes:

1. Loss of nominal voltage or frequency of Source B.
2. Test in progress with Source A as preferred source.
3. Exercise transfer switch with Source A as preferred source.

Diagnosis and Repair:

No further action required.

7.12 Code 106 – Test Start A (Event)

Logic:

Source A has received a test start command from the control or the network.

Description:

This event is active whenever the controller performs a Test sequence. The controller also activates the Emergency Start A output in order for the generator to interpret that a Test/Exercise start is called for. The genset will not start if only the Test Start A event is active.

The test input may be sent from front panel, service tool, or network.

Possible Causes:

1. Test input sent from front panel or service tool.
2. Test input sent from network.

Diagnosis and Repair:

No further action required.

7.13 Code 107 – Emergency Start B (Event)

Logic:

Source B has received a start command from the transfer switch.

Description:

NOTICE
Only applicable in genset-to-genset configuration. Generator B is Source 1.

This event is active whenever the controller requires the Source 1 genset to start and reach rated speed — otherwise known as an emergency start. There is also a discrete output called Emergency Start B. Conditions which may prompt an emergency start are loss of nominal voltage or frequency of Source A, a test in progress with Source B as preferred source, or exercise transfer switch with Source B as the preferred source.

Possible Causes:

1. Loss of nominal voltage and frequency of Source A.

2. Test in progress with Source B as preferred source.
3. Exercise transfer switch with Source B as preferred source.

Diagnosis and Repair

No further action required.

7.14 Code 108 – Test Start B (Event)

Logic:

Source B has received a test start command from the control or the network.

Description:

NOTICE
Only applicable in genset-to-genset configuration. Generator B is Source 1.

This event is active whenever the controller performs a Test sequence. The controller also activates the Emergency Start B output in order for the generator to interpret that a Test/Exercise start is called for. The genset will not start if only the Test Start B event is active.

The test input may be sent from front panel, service tool, or network

Possible Causes:

1. Test input sent from front panel or service tool.
2. Test input sent from network.

Diagnosis and Repair:

No further action required.

7.15 Code 109 – Time Delay Engine Start A (Event)

Logic:

Source A engine start in user configured delayed time set-point.

Description:

This event is active whenever the Time Delay Start A timer is active. This event is inactive whenever the timer expires or is not active. The control activates this output whenever the control requires generator A to start.

The digital display shows this event when it becomes active. In addition, it displays an active countdown, in seconds, of the time delay.

The digital display shows this event when it becomes active. In addition, it displays an active countdown, in seconds, of the time delay.

This delay prevents the generator set from starting during short power interruptions. Timing starts at the Source 1 power interruption. If the user-defined duration (0 – 15 seconds) of interruption exceeds the time delay, the control systems starts Generator A.

Possible Cause:

Time Delay Engine Start A trim is more than 0 seconds after start command has been received.

Diagnosis and Repair:

No further action required.

7.16 Code 111 – Time Delay Engine Start B (Event)

Logic:

Source B engine start in user configured delayed time set-point.

Description:

NOTICE
Only applicable in genset-to-genset configuration. Generator B is Source 1.

This event is active whenever the Time Delay Start B timer is active. This event is inactive whenever the timer expires or is not active. The control activates this output whenever the control requires genset B to start.

The digital display shows this event when it becomes active. In addition, it displays an active countdown, in seconds, of the time delay.

The digital display shows this event when it becomes active. In addition, it displays an active countdown, in seconds, of the time delay.

This delay prevents the generator set from starting during short power interruptions. Timing starts at the Source 1 power interruption. If the user-defined duration (0 – 15 seconds) of interruption exceeds the time delay, the control systems starts Generator B.

Possible Cause:

Time delay engine start B trim is more than 0 seconds after start command has been received.

Diagnosis and Repair:

No further action required.

7.17 Code 112 – Time Delay Transfer (Event)

Logic:

Switch has commanded to transfer away from the preferred source with configured time delay normal to emergency trim.

Description:

This event is active whenever the Time Delay Source 1 to Source 2 timer is active — also called the time delay transfer. This event is inactive whenever the timer expires or is not active. The control activates this output when the control is counting down to transfer the switch from Source 1 to Source 2. The digital display displays this event when it becomes active. In addition, it displays an active countdown, in seconds, of the time delay.

This time delay begins after Source 2 becomes available and allows Source 2 to stabilize before the load is applied. This delay will initiate when the preferred source fails, there is a test in progress with time delay, or an exercise transfer switch with time delay.

Possible Causes:

1. Preferred source failed and time delay normal to emergency trim is greater than 0 seconds.
2. Test in progress with time delay normal to emergency trim greater than 0 seconds.
3. Exercise transfer switch with time delay normal to emergency trim greater than 0 seconds.

Diagnosis and Repair:

No further action required.

7.18 Code 113 – Time Delay Retransfer (Event)

Logic:

Switch has commanded to retransfer back to the preferred source with configured time delay emergency to normal trim.

Description:

This event is active whenever the Time Delay Source 2 to Source 1 timer is active—also called the time delay retransfer. This event is inactive whenever the timer expires or is not active. The control activates this output when the control is counting down to transfer the switch from Source 2 to Source 1.

The digital display shows this event when it becomes active. In addition, it displays an active countdown, in seconds, of the time delay.

This event is active whenever the Time Delay Source 2 to Source 1 timer is active—also called the time delay retransfer. This event is inactive whenever the timer expires or is not active. The control activates this output when the control is counting down to transfer the switch from Source 2 to Source 1.

The digital display shows this event when it becomes active. In addition, it displays an active countdown, in seconds, of the time delay.

Possible Causes:

1. Preferred source recovered and time delay emergency to normal trim is greater than 0 seconds.
2. Test in progress with time delay emergency to normal trim greater than 0 seconds.
3. Exercise transfer switch with time delay emergency to normal trim greater than 0 seconds.

Diagnosis and Repair:

No further action required.

7.19 Code 114 – Engine Cool-Down A (Event)

Logic:

Time Delay Engine Cool-down A timer has started, but not expired.

Description:

This event is active whenever the Time Delay Engine Cool-down Timer is active and is inactive when the timer expires or is inactive. The control activates this output whenever the control is cooling down the genset. The digital display shows this event when it becomes active. In addition, it displays an active countdown, in seconds, of the time delay.

This time delay allows the generator to cool down under no load conditions before the control turns it off.

Possible Causes:

Time delay engine cool-down A timer is greater than 0 seconds.

Diagnosis and Repair:

No further action required.

7.20 Code 115 – Program Transition (Event)

Logic:

The switch has executed a program transition between sources.

Description:

This event is active whenever the programmed transition timer is active (whenever the control is delaying the transfer switch in the neutral position). This event is inactive whenever the timer expires or is not active. The digital display shows this event when it becomes active. In addition, it displays an active countdown, in seconds, of the time delay.

Programmed Transition stops the switch in the neutral position for a user-defined interval of time. This delay allows residual current from inductive loads to decay to an acceptable level before transfer is complete.

Possible Causes:

Time delay program transition timer is greater than 0 seconds.

Diagnosis and Repair:

No further action required.

7.21 Code 116 – Transfer Pending (Event)

Logic:

There is a pending transfer active in the elevator relay module.

Description:

Whenever the Elevator Pre-transfer output is active, the controller sets this to active. The control activates this event whenever a transfer pending signal is needed in the power system – this is typically used as an early warning signal for elevator systems. When the timer expires, the event will go to inactive.

The digital display shows this event when it becomes active. In addition, it displays an active countdown, in seconds, of the time delay.

Possible Causes:

The elevator relay input has been activated.

Diagnosis and Repair:

No further action is required.

7.22 Code 117 – Test in Progress (Event)

Logic:

The control is operating under a test sequence.

Description:

This event is active whenever a test sequence is active. There is an associated LED output on the front panel and a relay output on the Relay Module. This allows the ATS operator to automatically test the transfer switch, generator, and power system.

When this event is active, the Test/Exercise Active LED on the front panel is lit and the Test/Exercise relay on the relay module is activated.

Test input may be sent from the front panel, service tool, or network.

Possible Causes:

1. Test input sent from front panel or service tool.
2. Test input sent from network.

Diagnosis and Repair:

No further action required.

7.23 Code 118 – Exercise Active (Event)

Logic:

The control is operating under an exercise sequence.

Description:

This event is active whenever an exercise is active. There is an associated LED output on the front panel and a relay output on the Relay Module. This allows the ATS operator to program and store multiple engine-generator exercise events.

When this event is active, the Test/ Exercise Active LED on the front panel is lit and the Test/Exercise relay on the relay module is activated.

This feature is only available with transfer switches with front panel display.

Possible Cause:

Exercise input programmed on front panel or service tool.

Diagnosis and Repair:

No further action required.

7.24 Code 119 – Sync Check (Event)

Logic:

The sync check sensor has been activated and is verifying if sources A and B meet conditions for synchronicity.

Description:

This event is active whenever as in-phase transfer (using the Sync Check Sensor) is pending. During this time, the Sync Check Sensor determines the acceptable conditions for a closed-transition or open transition with sync check transfers.

Possible Causes:

1. A closed transition command has been activated (applicable only to CT capable switches).
2. An open transition with Sync Check has been activate.

Diagnosis and Repair:

No further action required.

7.25 Code 121 – S1 Under Voltage (Event)

Logic:

Control has sensed that Source 1 voltage dropped below the specified dropout voltage percentage and the under voltage time delay has expired.

Description:

This event is active whenever Source 1 voltage is less than the acceptable limits. When the sensor detects a low voltage condition over a user-defined time period, this event is triggered. It should be noted that both the drop-out voltage and the time period are user-defined.

Possible Causes:

1. Nominal voltage set incorrectly.
2. Source 1 voltage is lower than the specified dropout voltage of the nominal voltage.
3. Source 1 phase multiplier and offsets need adjustment.

Diagnosis and Repair:

Contact support channel.

7.26 Code 122 – S1 Over Voltage (Event)

Logic:

Control has sensed that Source 1 voltage exceeded the specified dropout voltage percentage and the over voltage time delay has expired.

Description:

This event is active whenever Source 1 voltage is greater than the acceptable limits. When the sensor detects a high voltage condition over a specified time period, this event is triggered. It should be noted that both the drop-out voltage and the time period are user-defined.

Possible Causes:

1. Nominal voltage set incorrectly.
2. Source 1 voltage is lower than the specified dropout voltage of the nominal voltage.
3. Source 1 phase multiplier and offsets need adjustment.

Diagnosis and Repair:

Contact support channel.

7.27 Code 123 – S1 Frequency Fail (Event)

Logic:

Source 1 frequency is out of specified tolerance range.

Description:

This event is active whenever Source 1 frequency is outside acceptable limits, as defined by the user.

Possible Causes:

1. Incorrect frequency settings.
2. Frequency is outside of the dropout range.

Diagnosis and Repair:

Contact support channel.

7.28 Code 124 – S1 Loss Phase (Event)

Logic:

The relative phase angle between any line-to-line voltage has dropped to less than 90 degrees.

Description:

This event is active whenever Source 1 is missing one or more of its three phase voltages, or when the phase angle between any two lines drops below 90 degrees.

This feature is mainly used to protect three-phase devices, like motors. It is only available on Level 2 controls, in a three-phase application. This feature initiates a transfer away from a source that has lost a single phase and it prevents transfer to a source that has lost a single phase.

Possible Causes:

1. One of the three phases is open or has been shorted.
2. Sensing Leads to Power Module are loose or broken.

Diagnosis and Repair:

Contact support channel.

7.29 Code 125 – S1 Imbalance Fail (Event)

Logic:

Sensor has detected there is an unbalanced voltage condition on a three-phase system for source 1.

Description:

This event is active whenever there is a significant imbalance between the phases of Source 1. The voltage must deviate from the average voltage by a user-specified value between 2 and 10% (drop-out).

This feature is used for equipment protection. It is used in three-phase applications and informs the operator when there is a significant voltage imbalance between the phases of Source 1 or Source 2. The imbalance is typically caused by severe single phase loading. To prevent nuisance faults, the setting can be increased up to ten percent of nominal voltage.

Possible Cause:

Incorrect imbalance settings.

Diagnosis and Repair:

Contact support channel.

7.30 Code 126 – S2 Under Voltage (Event)

Logic:

Control has sensed that Source 2 voltage dropped below the specified dropout voltage percentage and the under voltage time delay has expired.

Description:

This event is active whenever Source 2 voltage is less than the acceptable limits. When the sensor detects a low voltage condition over a specified time period, this event is triggered. It should be noted that both the drop-out voltage and the time period are user-defined.

Possible Causes:

1. Nominal voltage set incorrectly.
2. Source 2 voltage is lower than the specified dropout voltage of the nominal voltage.
3. Source 2 phase multiplier and offsets need adjustment.

Diagnosis and Repair:

Contact support channel.

7.31 Code 127 – S2 Over Voltage (Event)

Logic:

Control has sensed that Source 2 voltage exceeded the specified dropout voltage percentage and the over voltage time delay has expired.

Description:

This event is active whenever Source 2 voltage is greater than the acceptable limits. When the sensor detects a high voltage condition over a specified time period, this event is triggered. It should be noted that both the drop-out voltage and the time period are user-defined.

Possible Causes:

1. Nominal voltage set incorrectly.
2. Source 2 voltage is lower than the specified dropout voltage of the nominal voltage.
3. Source 2 phase multiplier and offsets need adjustment.

Diagnosis and Repair:

Contact support channel.

7.32 Code 128 – S2 Frequency Fail (Event)

Logic:

Source 2 frequency is out of specified tolerance range.

Description:

This event is active whenever Source 2 frequency is outside acceptable limits, as defined by the user.

Possible Causes:

1. Incorrect frequency settings.

2. Frequency is outside of the dropout range.

Diagnosis and Repair:

Contact support channel.

7.33 Code 129 – S2 Loss Phase (Event)

Logic:

The relative phase angle between any line-to-line voltage has dropped to less than 90 degrees.

Description:

This event is active whenever Source 2 is missing one or more of its three phase voltages, or when the phase angle between any two lines drops below 90 degrees.

This feature is mainly used to protect three-phase devices, like motors. It is only available on Level 2 controls, in a three-phase application. This feature initiates a transfer away from a source that has lost a single phase and it prevents transfer to a source that has lost a single phase.

Possible Causes:

1. One of the three phases is open or has been shorted.
2. Sensing Leads to Power Module are loose or broken.

Diagnosis and Repair:

Contact support channel.

7.34 Code 131 – S2 Imbalance Fail (Event)

Logic:

Sensor has detected there is an unbalanced voltage condition on a three-phase system for source 2.

Description:

This event is active whenever there is a significant imbalance between the phases of Source 2. The voltage must deviate from the average voltage by a user-specified value between 2 and 10% (drop-out).

This feature is used for equipment protection. It is used in three-phase applications and informs the operator when there is a significant voltage imbalance between the phases of Source 2.

Possible Cause:

Incorrect imbalance settings.

Diagnosis and Repair:

Contact support channel.

7.35 Code 132 – Phase Rotation Failure (Event)

Logic:

Source 1 and Source 2 do not have the same phase rotation.

Description:

This event is active whenever Source 1 and Source 2 voltages have difference phase sequences. This feature is used to protect against equipment damage. It is only available on Level 2 controls. This feature is required in fire pump applications and is enabled by default.

This feature monitors the phase rotation of the non-connected source in relation to the connected source. When the non-connected source is out of phase rotation with the connected source, transfer is inhibited. This generally occurs on new installations or after storm damage or generator rewiring.

The phase rotation shall only be checked if both sources have acceptable voltage and frequency.

Possible Causes:

1. Invalid phase rotation.
2. Distortion caused by customer loads.

Diagnosis and Repair:

Contact support channel.

7.36 Code 133 – Motor Disconnect (Event)

Logic:

Motor disconnect input has been detected by the control.

Description:

This event is active whenever the ATS Motor Disconnect input is active. This input causes the controller to enter a non-automatic mode – it does not try to move the transfer switch mechanism.

Possible Cause:

Motor disconnect input is in the OFF position.

Diagnosis and Repair:

Verify linear motor disconnect switch is in AUTO.

7.37 Code 134 – Load Shed (Event)

Logic:

The transfer switch was signaled to shed load from the generator.

Description:

This event is active whenever the Load Shed input is active or the *nviLoadShedCmd* input is active. Load Shed causes the transfer switch to disconnect from an otherwise available source in order to reduce the load demand on that source. The switch is moved to the Neutral position.

Possible Causes:

1. The *Load Shed* relay (optional) was energized because the transfer switch was signaled to shed load from the generator.
2. Connections at J15-15 and J15-16 were energized causing a logic input from the load shed to the control.

Diagnosis and Repair:

No further action is required.

7.38 Code 135 – Transfer Inhibit (Event)

Logic:

The control has received a transfer inhibit command.

Description:

This event is active whenever the Transfer Inhibit input is active, or the *nviTransferInhCmd* input is active. Transfer Inhibit is used to prevent the ATS from automatically transferring the load to Source 2.

While the Transfer Inhibit is active, the Not in Auto signal will be turned on.

Possible Cause:

(J27-4) TB2-6 (Transfer Inhibit) is receiving a ground signal. Not in auto signal will be turned on.

Diagnosis and Repair:

Load transfers can only take place by pressing the override button on the switch panel or disabling the transfer inhibit input.

7.39 Code 136 – Retransfer Inhibit (Event)

Logic:

Switch has commanded to retransfer back to the preferred source but is inhibited by outside input.

Description:

This event is active whenever the Retransfer Inhibit input is active, or the *nviReTransferInhCmd* input is active. Even though the Not-in-Auto light is lit, the transfer switch will function correctly. Transfer Inhibit is used to prevent the ATS from automatically transferring the load back to Source 1.

When this event is active, (J27-1) TB3-53 (Retransfer Inhibit) is receiving a ground signal. Not in auto signal will be turned on.

Possible Cause:

(J27-1) TB3-53 (Retransfer Inhibit) is receiving a ground signal. Not in auto signal will be turned on.

Diagnosis and Repair:

No further action required.

7.40 Code 137 – Bypassed to S1 (Event)

Logic:

The Bypass mechanism has been placed into S1 position.

Description:

This event is active when operator manually connects the Bypass switch to Source 1. Upon detecting the Bypass Source 1 input is active, the control activates the Not In Auto LED, activates the Not In Auto relay output, and changes the Bypassed Source 1 event status to active.

Possible Causes:

1. The handle has moved to the bypass S1 position.
2. The limit switch AB41 has been closed.

Diagnosis and Repair:

No further action required.

7.41 Code 138 – Bypassed to S2 (Event)

Logic:

The bypass mechanism has been placed into S2 position.

Description:

This event is active when operator manually connects the Bypass switch to Source 2. Upon detecting the Bypass Source 2 input is active, the control activates the Not In Auto LED, activates the Not In Auto relay output, and changes the Bypassed Source 2 event status to active.

Possible Causes:

1. The handle has moved to the bypass S2 position.
2. The limit switch AB33 has been closed.

Diagnosis and Repair:

No further Action Required.

7.42 Code 139 – Not in Auto (Fault)

Logic:

The Switch is not in the automatic mode of operation.

Description:

1. The Motor Disconnect Switch is Off.
2. The Transfer Inhibit signal is active.
3. The Retransfer Inhibit signal is active.
4. The Load Shed signal is active.
5. The Bypass switch is connected.
6. C1 capacitor is cracked.

Diagnosis and Repair:

1. Move Motor Disconnect Switch to Auto.
2. Remove Transfer Inhibit signal.
3. Remove Retransfer Inhibit signal.
4. Remove Load Shed signal.
5. Disconnect bypass switch.
6. Check C1 capacitor.
    a. Remove C1 capacitor.
    b. Inspect capacitor for physical damage.
    c. If possible, test capacitor with a digital multimeter.
    d. Replace as necessary.

7.43 Code 141 – Service Tool (Event)

Logic:

The control is connected to the Service Tool via serial link.

Description:

This event is active whenever the PC service tool is connected to the controller. The purpose for this event is to provide a chronological service history, which is stored in the ATS.

Possible Cause:

The control has received the connect command from the computer.

Diagnosis and Repair:

No further action is required.

7.44 Code 143 – Sync Enable (Event)

Logic:

The control is ready to run the sync check sensor.

Description:

This event is only displayed if active synchronicity is enabled. This event becomes active when the control sends a Sync Enable message to a network control generator. In Closed Transition applications with active synchronizing, the controller will use the Sync Enable command instead of the Speed Adjust command. The controller activates the Sync Enable command just before activating the Sync Check Sensor. When the generator control receives the Sync Enable input and it detects the Source-1 bus voltages, the generator control will automatically synchronize its speed and phase to match the Source-1 bus.

Possible Cause:

The Sync Enable command has activated the Sync Check Sensor.

Diagnosis and Repair:

No Further action required.

7.45 Code 144 – Speed Adjust (Event)

Logic:

Switch is monitoring frequency of S1 and S2 and communicated to generator to alter speed before retransferring back to the preferred source based upon configured value.

Description:

This event is used to send a Speed Adjust message to a network generator control. The controller sends the message and logs the event. This signal causes the genset to increase speed by ½ Hz to sync with the utility. This signal ends when the transfer is complete.

Possible Causes

Generator is given speed command to retransfer to utility during close transition operation.

Diagnosis and Repair:

No further action required.

7.46 Code 145 – Fail to Sync (Event)

Logic:

Sources failed to synchronize (voltage, frequency, phase) within a two-minute limit during a transfer.

Description:

This event indicates the two power sources have failed to synchronize either voltage, phase or frequency within the hardcoded time limit of 120 seconds.

The event stays active until the Reset/Lamp Test button on the front panel is pressed. The Fail to Sync output stays closed until the Reset button is pressed.

After a Fail to Sync event occurs, another Fail to Sync event may occur or, if set up to do so, the transfer switch may go to open transition. If not set up to go to open transition, a series of Fail to Sync events may repeat until the system synchronizer is adjusted or repaired.

Possible Causes:

1. Frequency difference between the two sources is not within 1.0 Hz.
2. Average voltage difference between the two sources is not within 5 – 25 volts (AC).
3. Relative phase angle between the two sources is not within 25° or is moving towards 0°.

Diagnosis and Repair:

No further action required.

7.47 Code 146 – Sequencer Output 1-8 (Event)

Logic:

The transfer switch is performing load (add) sequencing with other switches connected in the network.

Description:

The Load Sequencer feature consists of eight programmable timers which can control eight different network devices in a timed sequence. Each Load Sequencer output is an independent Event Announcement, This is necessary for the Network Control Module (NCM) to receive and transmit event changes. When these outputs are active, the transfer switch is typically inhibiting another transfer switch from loading the active source. This allows a gentle loading of a transfer switch when performing a transfer or retransfer sequence. The Event Handler generates an Event Announcement whenever the Load Sequencer outputs (1-8) change state.

Possible Cause:

The load sequencer feature has been activated and the switch has received the sequencer signal.

Diagnosis and Repair:

No further action is required.

7.48 Code 155 – Network Wink (Event)

Logic:

Transfer switch was manually given a command to send an identification signal via network to all other nodes that are connected.

Description:

The network wink event is active whenever the Network Control Module (NCM) performs a logical write command to the controller. Network wink events are used by network service technicians to identify a particular network device in order to identify it from other devices. The controller responds to an active network wink event by placing a Network Wink message on the digital display.

Possible Cause:

Transfer switch was manually given a command to send a network wink.

Diagnosis and Repair:

No further action required.

7.49 Code 156 – Common Alarm A (Event)

Logic:

Source 2 is not available.

Description:

When this event is active and the digital relay module is utilized, if Genset A is not available this fault will signal to the transfer switch to execute a time delay engine start (TDES) for Genset B and transfer to that source once it is available. It will “lock out” Genset A until the fault is cleared. This is primarily used in generator to generator applications.

Possible Causes:

1. Genset A has a common alarm failure.
2. Digital relay module common alarm input is shorted to battery power.

Diagnosis and Repair:

Contact support channel.

7.50 Code 157 – Common Alarm B (Event)

Logic:

Source 1 is not available.

Description:

When this event is active and the digital relay module is utilized, if Genset B is not available this fault will signal to the transfer switch to execute a time delay engine start (TDES) for Genset A and transfer to that source once it is available. It will “lock out” Genset B until the fault is cleared. This is primarily used in generator to generator applications.

Possible Causes:

1. Genset B has a common alarm failure.
2. Digital relay module common alarm input is shorted to battery power.

Diagnosis and Repair:

Contact support channel.

7.51 Code 158 – Loss of Power (Event)

Logic:

The constant DC voltage of the controller has fallen below the normal operating point but kept above the basic operation voltage.

Description:

If this event is displayed on the front panel, the controller will shut itself down within 5 seconds of the message being displayed.

If this event is listed in the Event History log, it indicates that the control went to sleep after not receiving AC power from either source for 30 seconds.

The controller signals the network card and other devices that the ATS controller is going to shutdown due to lack of power. This signal triggers a time-delay start or other sequences. After these sequences are complete the controller shuts itself off in order to conserve the back-up batteries. The network card responds by not communicating to the controller.

Possible Cause:

Transfer switch has voltage input failure causing voltage dip to control.

Diagnosis and Repair:

Contact support channel.

7.52 Code 159 – TD Stop B (Event)

Logic:

Time Delay Stop Event B. The ATS begins timing delay when the load is retransferred to Source A.

Description:

This event is active when the controller initiates a time delay before shutting down Generator B after a retransfer. This is done to ensure stability on Source 1 before shutdown.

Possible Cause:

ATS retransferred to Source A.

Diagnosis and Repair:

No further action required.

7.53 Code 161 – High Neutral Amps (Event)

Logic:

Neutral current exceeded specified current threshold over a predetermined period of time.

Description:

NOTICE
This event is detected only on switches equipped with the Load Monitoring bar graph.

The control issues a warning when the neutral current exceeds a user specified value between 100% to 150% of the rated current during a specified time period between 10 to 60 seconds.

Possible Causes:

1. Current transformers wired incorrectly.
2. Bad current transformers.
3. Current transformer improperly calibrated.

Diagnosis and Repair:

Contact support channel.

7.54 Code 162 –Preferred Source 1 (Event)

Logic:

Source 1 is designated the preferred source.

Description:

This event is active when the preferred source variable changes from Source 2 to Source 1.

Possible Cause:

The operator selects source 1 as the preferred source.

Diagnosis and Repair:

No further action required.

7.55 Code 163 –Preferred Source 2 (Event)

Logic:

Source 2 is designated the preferred source.

Description:

This event is active when the preferred source variable changes from Source 1 to Source 2.

Possible Cause:

The operator selects source 2 as the preferred source.

Diagnosis and Repair:

No further action required.

7.56 Code 164 – Source 1 Stopped (Event)

Logic:

Source 1 has been stopped.

Description:

After Source 1 has been shut down, this event indicates the genset is no longer running.

Possible Causes:

Genset B has been shut down.

Diagnosis and Repair:

No further action required.

7.57 Code 165 – Source 2 Stopped (Event)

Logic:

Source 2 has been stopped.

Description:

After Source 2 has been shut down, this event indicates the genset is no longer running.

Possible Causes:

Genset A has been shut down.

Diagnosis and Repair:

No further action required.

7.58 Code 167 – Control Lockout (Event)

Logic:

Transfer switch faults out on a “Fail-to-Close” or “Fail-to-Open” during either the transfer or re-transfer.

Description:

This event occurs when any of faults listed below occur.

Possible Causes:

1. Source 1 fails to open.
2. Source 1 fails to close.
3. Source 2 fails to open.
4. Source 2 fails to close.

Diagnosis and Repair:

In all four cases, the control lockout condition can be terminated by pressing to reset button on the front panel. However, it is recommended that the source of the lockout be investigated using InPower.

1. Refer to Fault Code 2397.
2. Refer to Fault Code 2396.
3. Refer to Fault Code 1453.
4. Refer to Fault Code 1452.

7.59 Code 168 – Panel Lock (Event)

Logic:

Key Switch is in the Panel Lock Position.

Description:

NOTICE
This event will only occur on transfer switches equipped with the optional security key switch.

This event is active when the key switch is in the Panel Lock position. When the Key Switch is in the Panel Lock position, the front panel Test and Override pushbuttons are disabled and no changes to the setup menus can be made.

Possible Cause:

Key Switch is in the Panel Lock position.

Diagnosis and Repair:

1. Key Switch is in the Panel Lock position.
    a. Turn Key Switch to the Program position.

7.60 Code 169 – Max Parallel Time Exceeded (Event)

Logic:

Maximum Parallel Time has completed a user-defined time period.

Description:

At the beginning of a closed transition, a user-defined Maximum Parallel Time Delay is initiated. After the predetermined set time has expired, the original source is removed.

Possible Cause:

Transfer switch has exceeded max parallel time trim.

Diagnosis and Repair:

No action required.

7.61 Code 441 – Low Controller Battery (Event)

Logic:

Controller battery has dropped below 5.2 VDC.

Description:

Insufficient voltage is supplied to the controller.

Possible Causes:

1. No Battery.
2. Battery no longer holds charge.

Diagnosis and Repair:

Contact support channel.

7.62 Code 597 –Battery Charger Malfunction (Fault)

Logic:

The controller monitors the status of the optional battery charger. If the battery charger Fault input is active, this event is active.

Description:

For transfer switches that include a genset battery charger, this event signals the controller that the genset battery charger is malfunctioning and may need to be replaced.

This is not a standard factory connection. For more information, contact your dealer or distributor.

The event remains active until the Reset button on the front panel is pressed.

Possible Causes:

1. For 277, 380, 416, and 600 VAC chargers - Bad battery charger fuse(s).
2. For 120, 208, and 240 VAC chargers – Tripped circuit breakers.
3. Bad connection at optional relay module.
4. Refer to OEM manual.

Diagnosis and Repair:

Contact support channel.

7.63 Code 1113 – ATS Fail to Close: Transfer (Fault)

Logic:

Transfer switch failed to move in the predetermined time period.

Description:

For utility-to-genset applications, this event is active if the transfer switch failed to move from Source 1 to Neutral or Neutral to Source 2 within a preset time limit.

For utility-to-utility and genset-to-genset applications, this event is active if the transfer switch failed to move from the preferred source to the backup source within a preset time limit.

For open transition transfer switches, the controller first verifies the transfer switch moved from Source 1 to Neutral within the time limit defined in the Fail to Open Time Delay. The controller also verifies that the transfer switch moved from Neutral to Source 2 within the time limit defined in the Fail to Close Time Delay.

For closed transition transfer switches, the controller verifies that the ATS retransferred from Source 1 to Source 2 within the time limits.

Possible Causes:

1. Transfer switch “Fail to Close Time Limit” setting needs adjustment or is incorrect.
2. No Transfer signal.
3. No Programmed Transition signal.
4. Transfer switch S2 limit switch has failed/improperly adjusted.
5. Faulty limit switch wiring and/or digital board.
6. Linear actuator does not move when energized.
7. Mechanical damage to switch mechanism.

Diagnosis and Repair:

Contact support channel.

7.64 Code 1114 – ATS Fail to Close: RE-Transfer (Fault)

Logic:

The control detects a “Fail to Close” fault whenever the transfer switch does not move within the time interval after the command to transfer to the normal source (S1). A “Fail to Close” fault will be detected if the transfer switch either “Fails to Open” or it “Fails to Close”. The front panel reset button must be pressed to exit this condition.

Description:

For utility-to-genset applications, this event is active if the transfer switch failed to move from Source 2 to Neutral or Neutral to Source 1 within a preset time limit.

For utility-to-utility and genset-to-genset applications, this event is active if the transfer switch failed to move from the preferred source to the backup source within a preset time limit.

For open transition transfer switches, the controller first verifies the transfer switch moved from Source 2 to Neutral within the time limit defined in the Fail to Open Time Delay. The controller also verifies that the transfer switch moved from Neutral to Source 1 within the time limit defined in the Fail to Close Time Delay.

For closed transition transfer switches, the controller verifies that the ATS retransferred from Source 2 to Source 1 within the time limits.

Possible Causes:

1. Transfer switch “Fail to Close Time Limit” setting needs adjustment or is incorrect.
2. No Transfer signal.
3. No Programmed Transition signal.
4. Transfer switch S2 limit switch has failed/improperly adjusted.
5. Faulty limit switch wiring and/or digital board.
6. Linear actuator does not move when energized.
7. Mechanical damage to switch mechanism.

Diagnosis and Repair:

Contact support channel.

7.65 Code 1121 – ATS Fail to Disconnect (Fault)

Logic:

Controller has sense that neither source has opened during a parallel transition.

Description:

This event is active when both sources have paralleled, there is a failure to open either power source, and all attempts to automatically separate them within a set period of time have failed. This event applies to only closed transition modes and is needed to trip an external circuit breaker. The event remains active until the Reset button on the front panel is pressed.

Possible Causes:

1. Time Delay Fail to disconnect to low.
2. Mechanical fault or damage preventing or slowing switch movement.
3. Limit switches not working or being activated.

Diagnosis and Repair:

Contact support channel.

7.66 Code 1452 – Fail to Close S2 (Fault)

Logic:

Full transition from Source 1 to Source 2 was not established.

Description:

While attempting to transfer the load to Source 2, the control was not able to close Source 2 contacts within a certain time interval after the command. A Fail to Close fault will be detected if the transfer switch fails to open or it fails to close. This event is followed by a Control Locked Out event.

Possible Causes:

1. Transfer switch “Fail to Close Time Limit” setting needs adjustment or is incorrect.
2. No Transfer signal.
3. No Programmed Transition signal.
4. Switch is jammed or stuck.
5. Limit switches not working or being activated.
6. Linear actuator does not move when energized.

Diagnosis and Repair:

Contact support channel.

7.67 Code 1453 – Failed to Open S2 (Fault)

Logic:

Source 2 did not open during retransfer in allotted time.

Description:

While attempting to transfer the load to Source 1, the control was not able to open the Source 2 contacts within the user-defined Fail to Open time limit. This event is followed by a “Control Lock Out” event.

Possible Causes:

1. No Transfer signal.
2. Linear actuator does not move when energized.
3. No Programmed Transition signal.
4. Switch is jammed or stuck.
5. Limit switches not working or being activated.

Diagnosis and Repair:

Contact support channel.

7.68 Code 1468 – Network Communications Error (Fault)

Logic:

The LonWorks card has generated a network communication error fault.

Description:

This event is detected by the Network Communications Module (NCM) and is communicated to the transfer switch controller. This indicates that the device is no longer communicating with other devices on the network. The controller Fault Flash-out subsystem flashes this fault until the fault is reset.

Possible Causes:

1. The ATS network card has been disconnected from the other elements in the network.
2. The ATS network card has lost network information.
3. The ATS network card is not commissioned correctly.
4. One of the elements connected to the transfer switch is not communicating correctly.
5. One of the elements connected to the transfer switch is not commissioned correctly.
6. Bad network card.

Diagnosis and Repair:

Contact support channel.

7.69 Code 2396 – Failed to Close S1 (Fault)

Logic:

Full transition from Source 2 to Source 1 was not established.

Description:

While attempting to transfer the load to Source 1, the control was not able to close Source 1 contacts within a certain time interval after the command. A Fail to Close fault will be detected if the transfer switch fails to open or it fails to close. This event is followed by a Control Locked Out event.

Possible Causes:

1. Transfer switch “Fail to Close Time Limit” setting needs adjustment or is incorrect.
2. No Transfer signal.
3. No Programmed Transition signal.
4. Switch is jammed or stuck.
5. Limit switches not working or being activated.
6. Linear actuator does not move when energized.

Diagnosis and Repair:

Contact support channel.

7.70 Code 2397 – Fail to Open S1 (Fault)

Logic:

Source 1 did not open during transfer in allotted time.

Description:

While attempting to transfer the load to Source 1, the control was not able to open the Source 2 contacts within the user-defined Fail to Open time limit. This event is followed by a “Control Lock Out” event.

Possible Causes:

1. No Transfer signal.
2. No Programmed Transition signal.
3. Switch is jammed or stuck.
4. Limit switches not working or being activated.
5. Linear actuator does not move when energized.

Diagnosis and Repair:

Contact support channel.

This page is intentionally blank.

This is a representative (generic) schematic/wiring diagram. For troubleshooting, refer to the schematic and wiring diagram package that was shipped with the transfer switch.

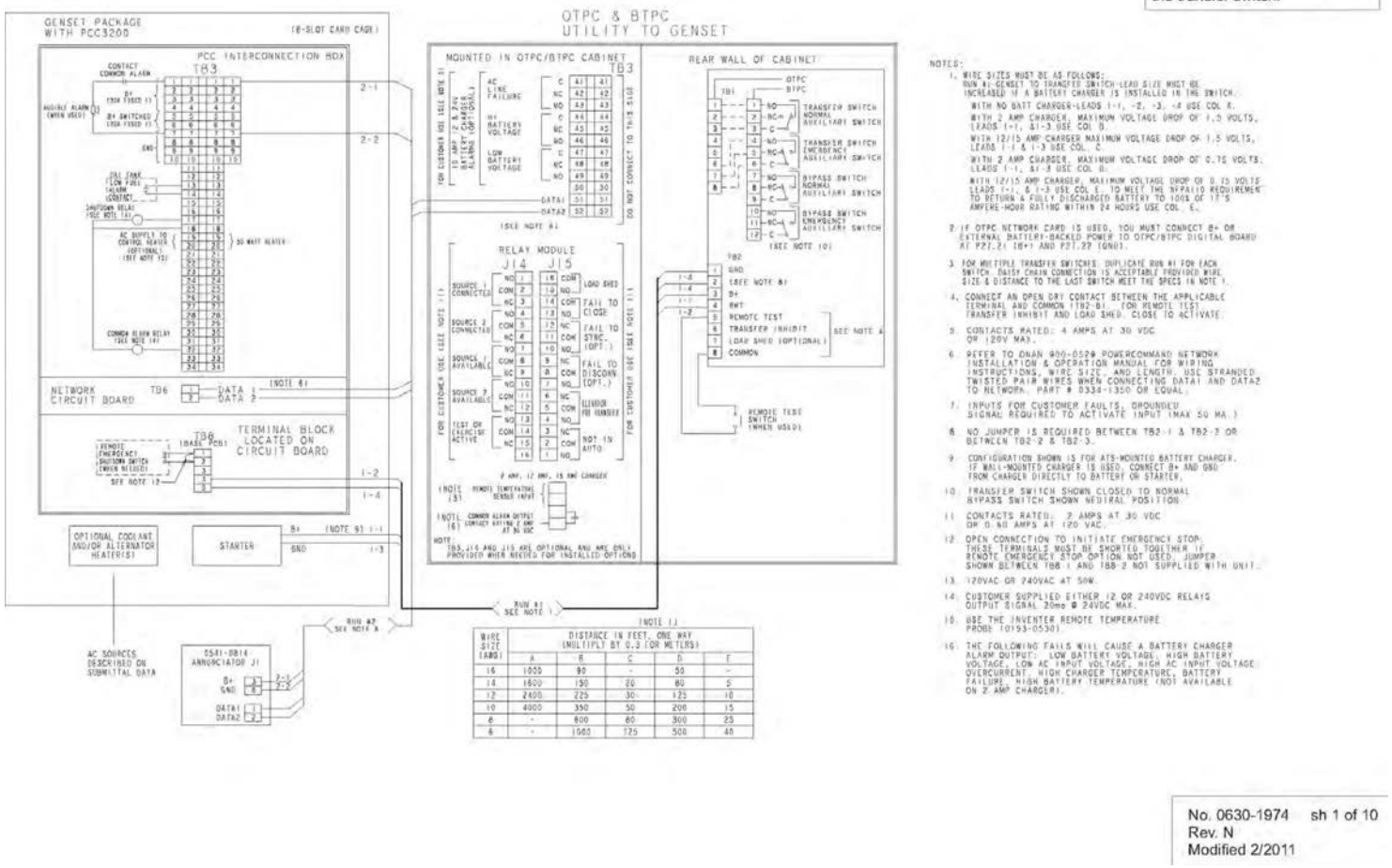

FIGURE 93. 1200 AMP TYPICAL INTERCONNECTION DIAGRAM (SHEET 1 OF 10)

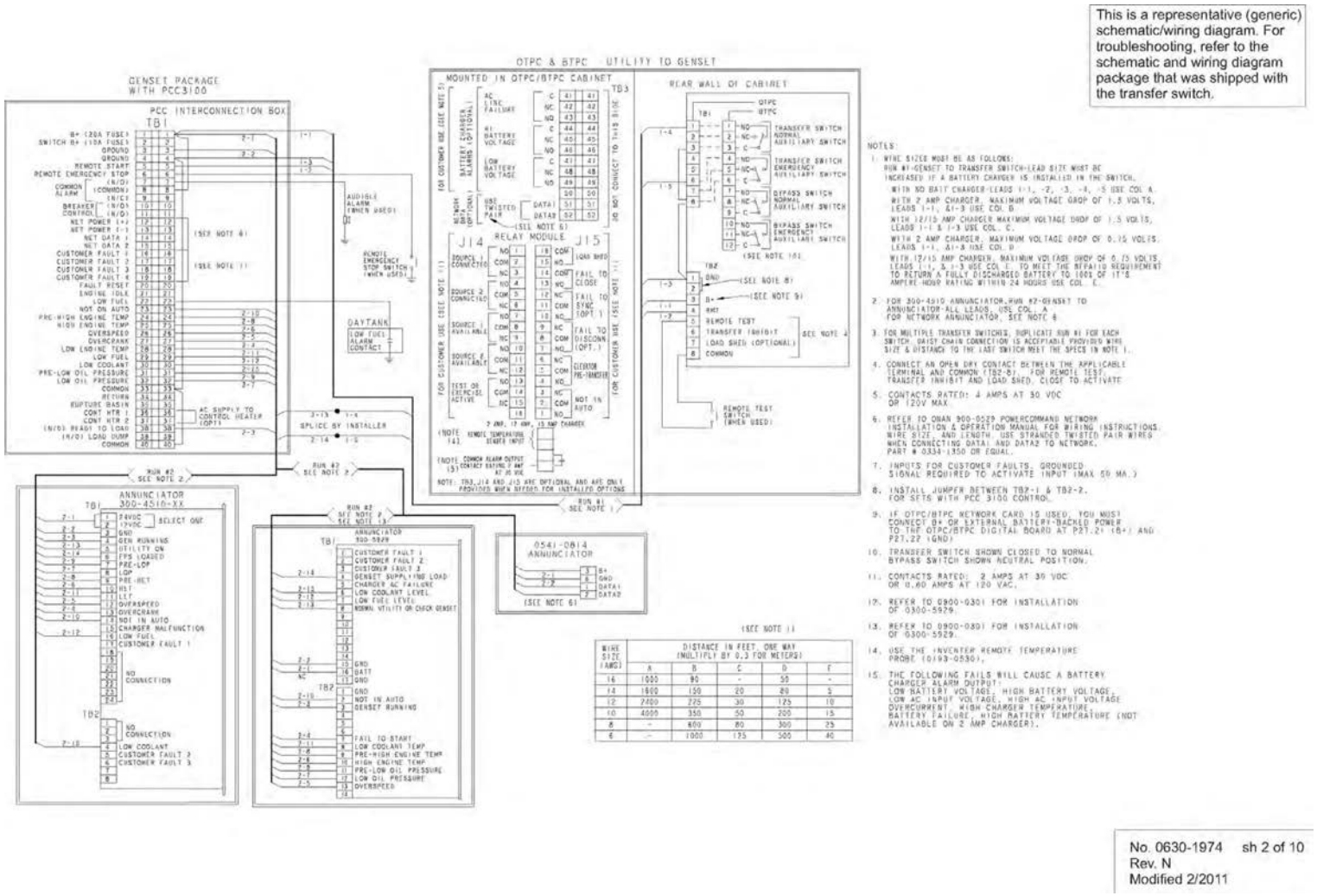

FIGURE 94. 1200 AMP TYPICAL INTERCONNECTION DIAGRAM (SHEET 2 OF 10)

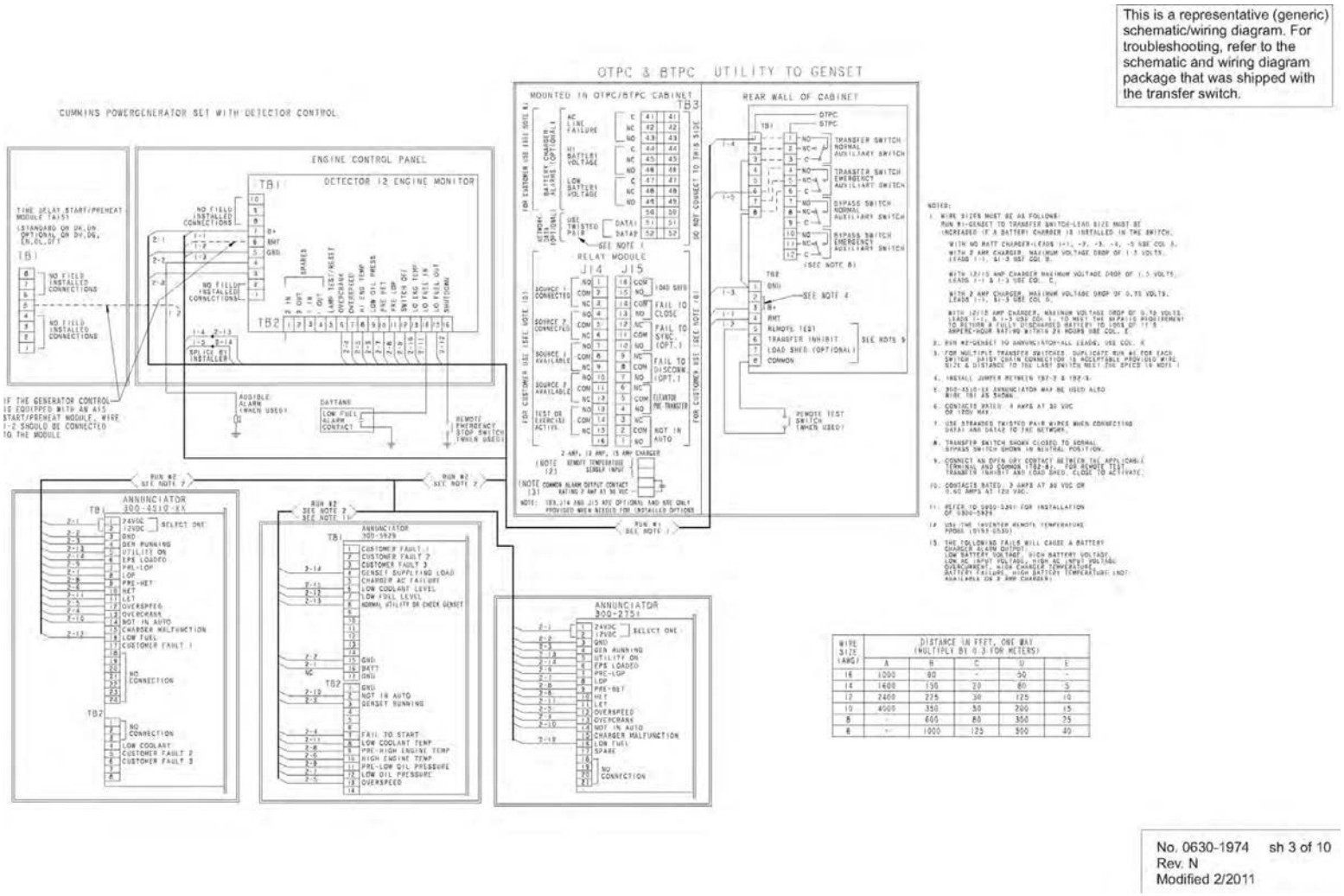

FIGURE 95. 1200 AMP TYPICAL INTERCONNECTION DIAGRAM (SHEET 3 OF 10)

This is a representative (generic) schematic/wiring diagram. For troubleshooting, refer to the schematic and wiring diagram package that was shipped with the transfer switch.

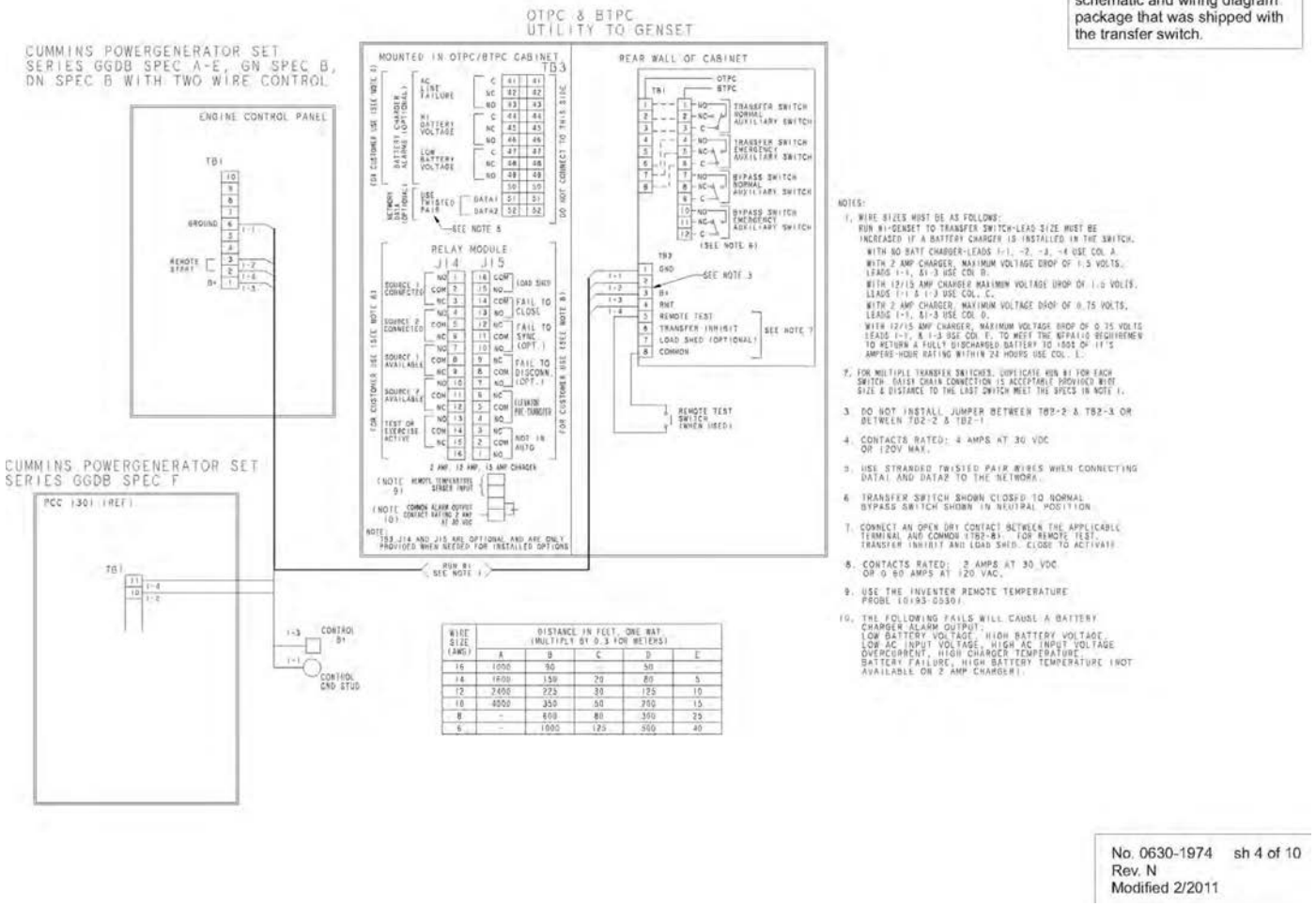

No. 0630-1974 sh 4 of 10
Rev. N
Modified 2/2011

FIGURE 96. 1200 AMP TYPICAL INTERCONNECTION DIAGRAM (SHEET 4 OF 10)

This is a representative (generic) schematic/wiring diagram. For troubleshooting, refer to the schematic and wiring diagram package that was shipped with the transfer switch.

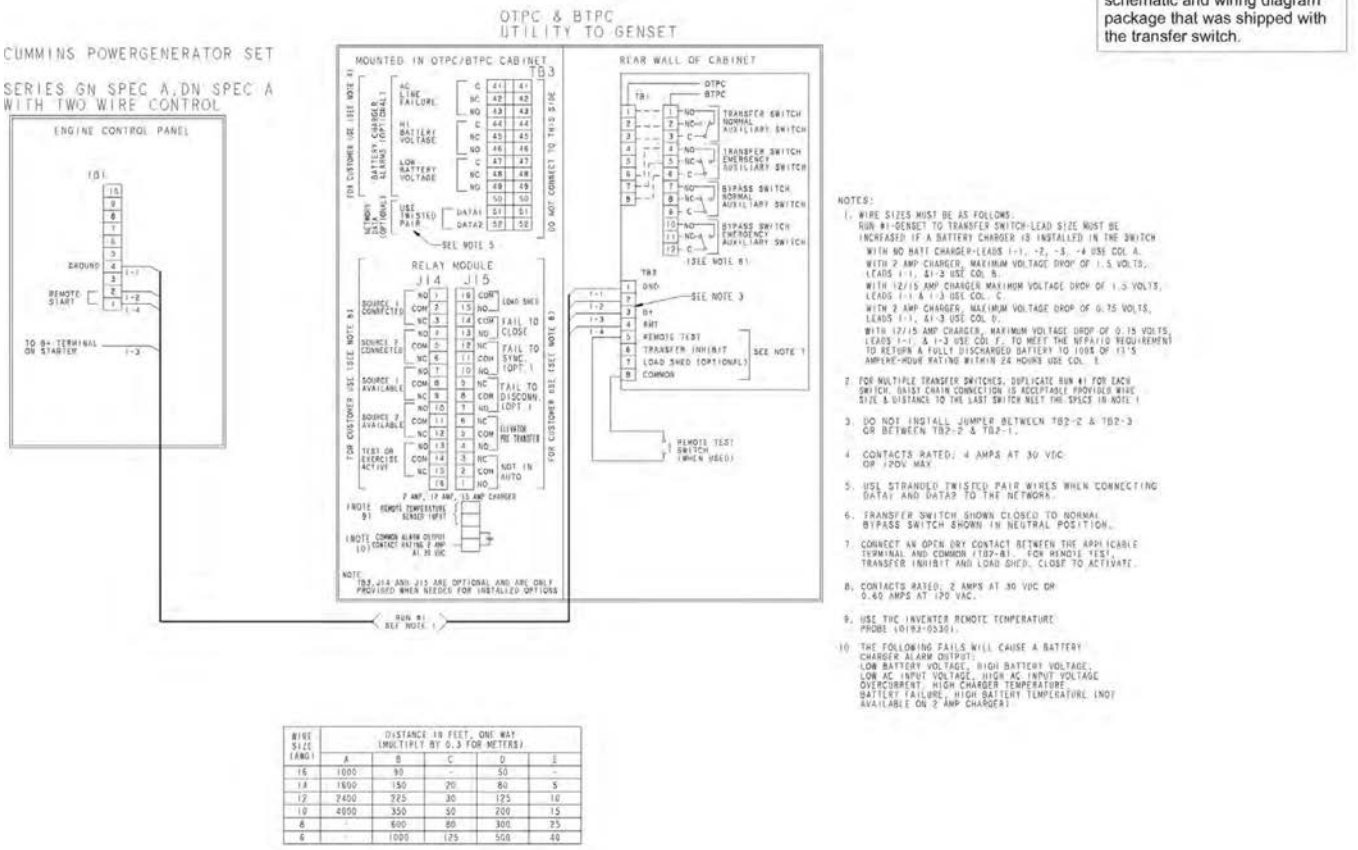

WIRE SIZE (AWG)	DISTANCE IN FEET, ONE WAY (MULTIPLY BY 0.3 FOR METERS)				
	A	B	C	D	E
16	1000	90	-	50	-
14	1600	150	70	80	5
12	2400	225	30	125	10
10	4000	350	50	200	15
8	-	600	80	300	25
6	-	1000	125	500	40

No. 0630-1974 sh 5 of 10
Rev. N
Modified 2/2011

FIGURE 97. 1200 AMP TYPICAL INTERCONNECTION DIAGRAM (SHEET 5 OF 10)

This is a representative (generic) schematic/wiring diagram. For troubleshooting, refer to the schematic and wiring diagram package that was shipped with the transfer switch.

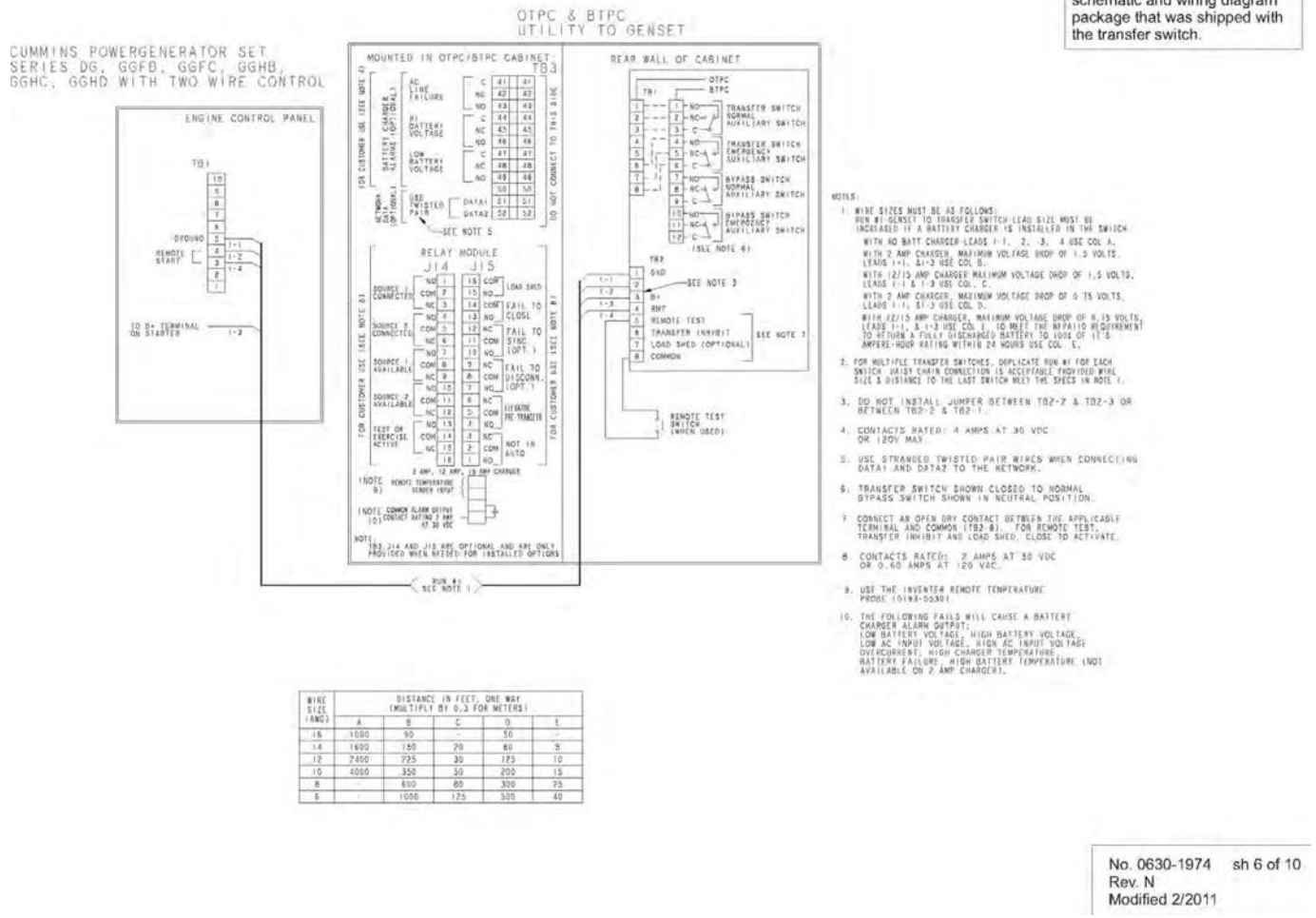

WIRE SIZE (AWG)	DISTANCE IN FEET, ONE WAY (MULTIPLY BY 0.3 FOR METERS)				
	A	B	C	D	E
16	1000	90	-	50	-
14	1600	150	20	80	5
12	2400	225	30	125	10
10	4000	350	50	200	15
8	-	600	80	300	25
6	-	1000	125	500	40

No. 0630-1974 sh 6 of 10
Rev. N
Modified 2/2011

FIGURE 98. 1200 AMP TYPICAL INTERCONNECTION DIAGRAM (SHEET 6 OF 10)

This is a representative (generic) schematic/wiring diagram. For troubleshooting, refer to the schematic and wiring diagram package that was shipped with the transfer switch.

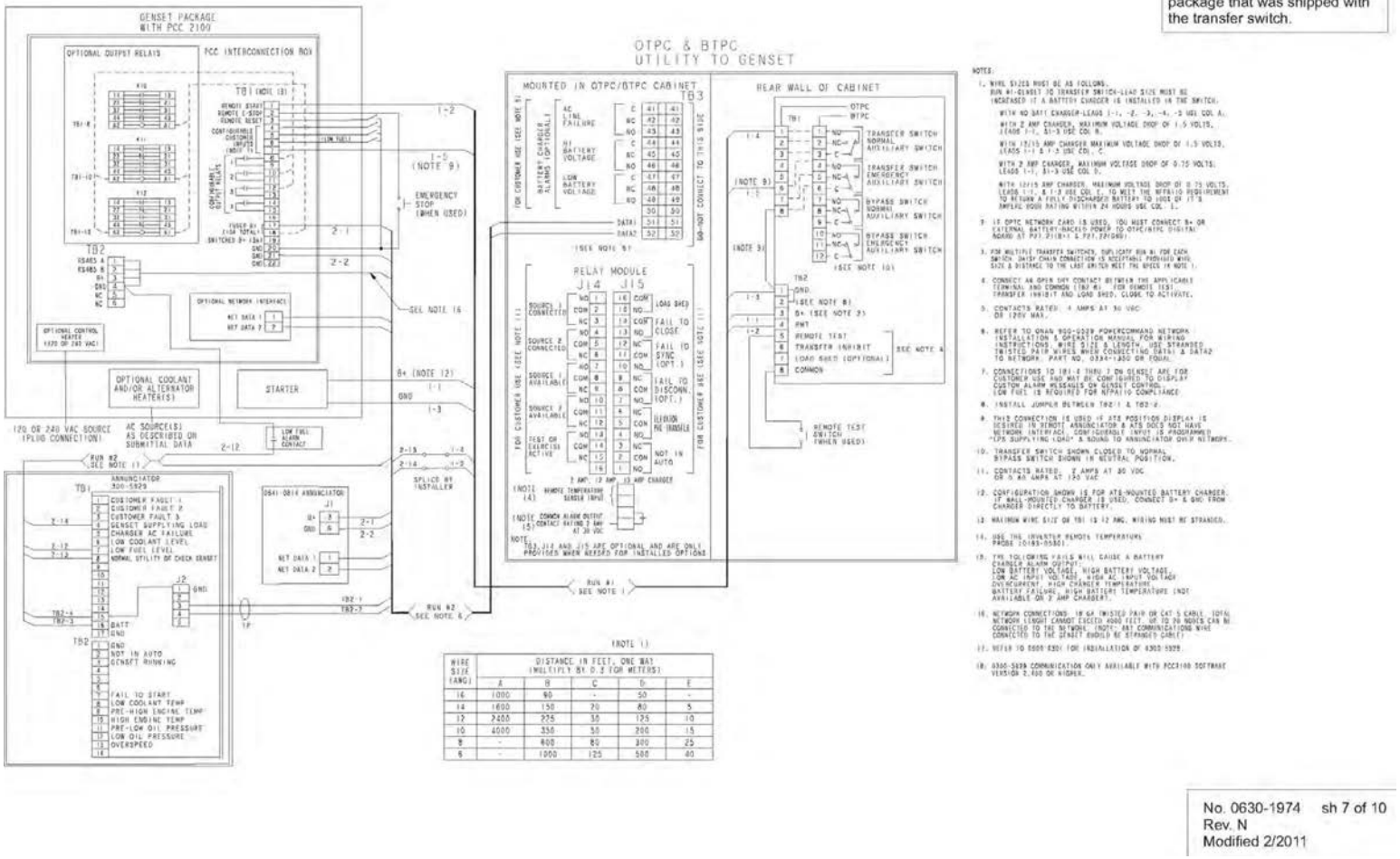

FIGURE 99. 1200 AMP TYPICAL INTERCONNECTION DIAGRAM (SHEET 7 OF 10)

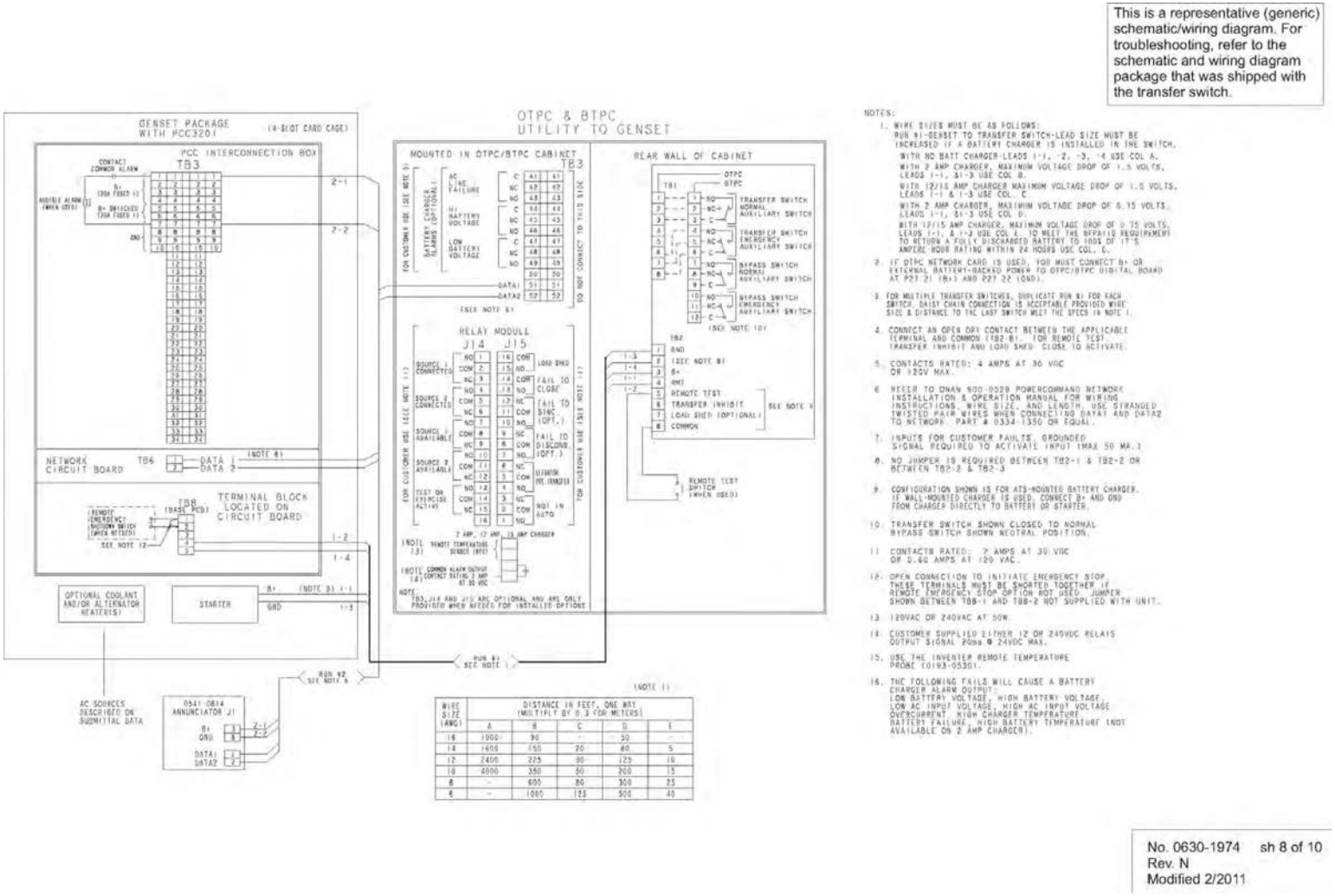

FIGURE 100. 1200 AMP TYPICAL INTERCONNECTION DIAGRAM (SHEET 8 OF 10)

This is a representative (generic) schematic/wiring diagram. For troubleshooting, refer to the schematic and wiring diagram package that was shipped with the transfer switch.

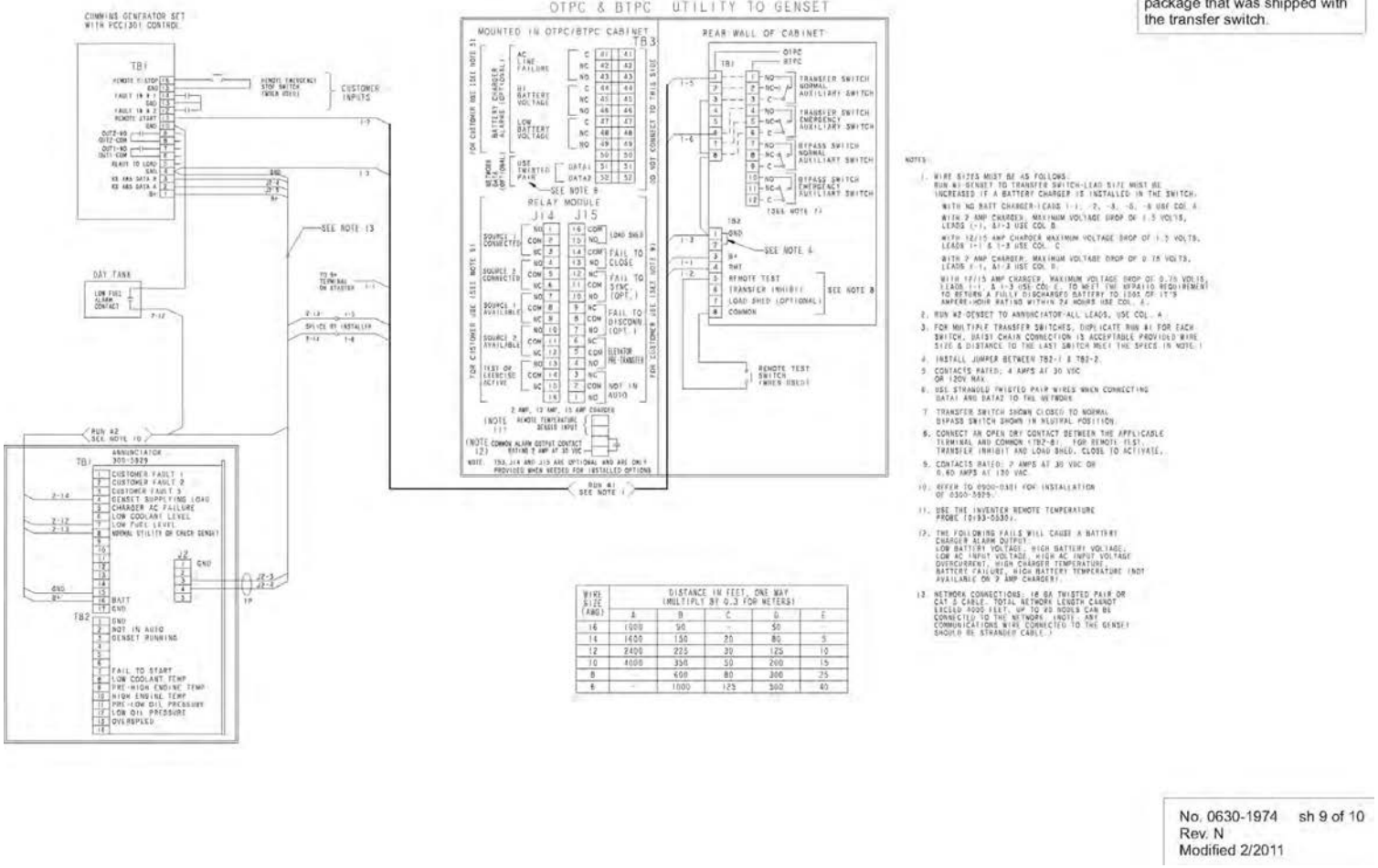

NOTES:

1. WIRE SIZES MUST BE AS FOLLOWS:
   RUN W1-GENSET TO TRANSFER SWITCH-LEAD SIZE MUST BE INCREASED IF A BATTERY CHARGER IS INSTALLED IN THE SWITCH.
   WITH NO BATT CHARGER-LEADS 1-1, -2, -3, -5, -6 USE COL. A
   WITH 2 AMP CHARGER: MAXIMUM VOLTAGE DROP OF 1.5 VOLTS, LEADS (+), &1-3 USE COL. B.
   WITH 12/15 AMP CHARGER MAXIMUM VOLTAGE DROP OF 1.3 VOLTS, LEADS 1-1 & 1-3 USE COL. C
   WITH 2 AMP CHARGER: MAXIMUM VOLTAGE DROP OF 0.15 VOLTS, LEADS 1-1, &1-3 USE COL. D.
   WITH 12/15 AMP CHARGER, MAXIMUM VOLTAGE DROP OF 0.75 VOLTS, LEADS 1-1, & 1-3 USE COL. E. TO MEET THE NFPA110 REQUIREMENT TO RETURN A FULLY DISCHARGED BATTERY TO 100% OF IT'S AMPERE-HOUR RATING WITHIN 24 HOURS USE COL. E.
2. RUN W2 GENSET TO ANNUNCIATOR-ALL LEADS, USE COL. A.
3. FOR MULTIPLE TRANSFER SWITCHES, DUPLICATE RUN #1 FOR EACH SWITCH. DAISY CHAIN CONNECTION IS ACCEPTABLE PROVIDED WIRE SIZE & DISTANCE TO THE LAST SWITCH MEET THE SPECS IN NOTE 1
4. INSTALL JUMPER BETWEEN TB2-1 & TB2-2.
5. CONTACTS RATED: 4 AMPS AT 30 VDC OR 120V MAX
6. USE STRANDED TWISTED PAIR WIRES WHEN CONNECTING DATA1 AND DATA2 TO THE NETWORK
7. TRANSFER SWITCH SHOWN CLOSED TO NORMAL. BYPASS SWITCH SHOWN IN NEUTRAL POSITION.
8. CONNECT AN OPEN DRY CONTACT BETWEEN THE APPLICABLE TERMINAL AND COMMON (TB2-8). FOR REMOTE TEST, TRANSFER INHIBIT AND LOAD SHED, CLOSE TO ACTIVATE.
9. CONTACTS RATED: 2 AMPS AT 30 VDC OR 0.60 AMPS AT 120 VAC
10. REFER TO 0500-0401 FOR INSTALLATION OF 0300-5929.
11. USE THE INVENTER REMOTE TEMPERATURE PROBE (0193-0330).
12. THE FOLLOWING FAILS WILL CAUSE A BATTERY CHARGER ALARM OUTPUT: LOW BATTERY VOLTAGE, HIGH BATTERY VOLTAGE, LOW AC INPUT VOLTAGE, HIGH AC INPUT VOLTAGE OVERCURRENT, HIGH CHARGER TEMPERATURE, BATTERY FAILURE, HIGH BATTERY TEMPERATURE (NOT AVAILABLE ON 2 AMP CHARGER).
13. NETWORK CONNECTIONS: 16 GA TWISTED PAIR OR CAT 5 CABLE. TOTAL NETWORK LENGTH CANNOT EXCEED 4000 FEET. UP TO 99 NODES CAN BE CONNECTED TO THE NETWORK. (NOTE: ANY COMMUNICATIONS WIRE CONNECTED TO THE GENSET SHOULD BE STRANDED CABLE.)

WIRE SIZE (AWG)	DISTANCE IN FEET, ONE WAY (MULTIPLY BY 0.3 FOR METERS)				
	A	B	C	D	E
16	1000	90	-	50	
14	1600	150	20	80	5
12	2400	225	30	125	10
10	4000	350	50	200	15
8	-	600	80	300	25
6	-	1000	125	500	40

No. 0630-1974 sh 9 of 10
Rev. N
Modified 2/2011

FIGURE 101. 1200 AMP TYPICAL INTERCONNECTION DIAGRAM (SHEET 9 OF 10)

This is a representative (generic) schematic/wiring diagram. For troubleshooting, refer to the schematic and wiring diagram package that was shipped with the transfer switch.

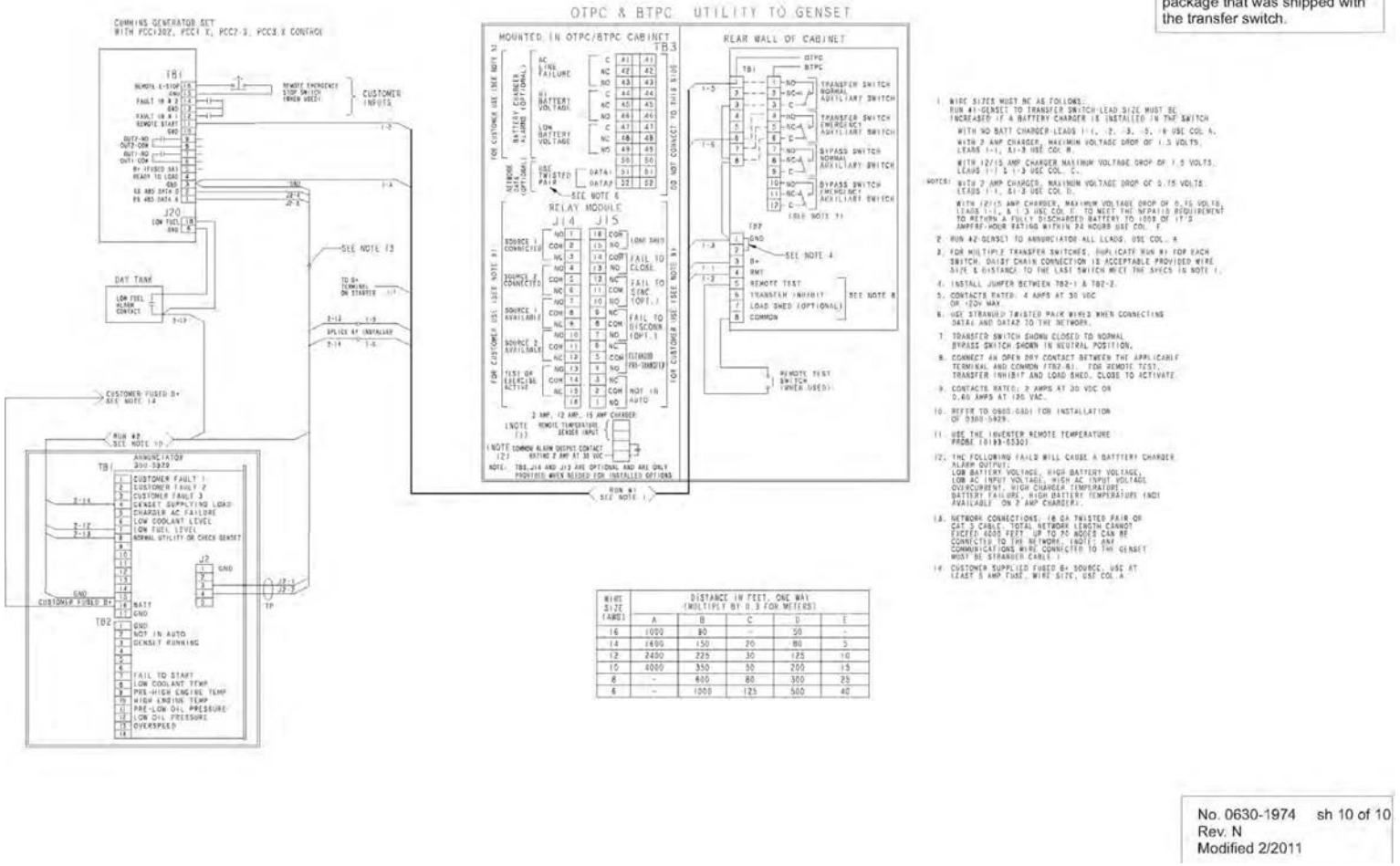

WIRE SIZE (AWG)	DISTANCE IN FEET, ONE WAY (MULTIPLY BY 0.3 FOR METERS)				
	A	B	C	D	E
16	1000	80	-	50	-
14	1600	150	20	80	5
12	2400	225	30	125	10
10	4000	350	50	200	15
8	-	600	80	300	25
6	-	1000	125	500	40

1. WIRE SIZES MUST BE AS FOLLOWS:
   RUN #1-GENSET TO TRANSFER SWITCH-LEAD SIZE MUST BE INCREASED IF A BATTERY CHARGER IS INSTALLED IN THE SWITCH
   WITH NO BATT CHARGER-LEADS 1-1, -2, -3, -5, -6 USE COL A.
   WITH 2 AMP CHARGER, MAXIMUM VOLTAGE DROP OF 1.5 VOLTS. LEADS 1-1, &1-3 USE COL B.
   WITH 12/15 AMP CHARGER MAXIMUM VOLTAGE DROP OF 1.5 VOLTS. LEADS 1-1 & 1-3 USE COL. C.
   NOTE: WITH 2 AMP CHARGER, MAXIMUM VOLTAGE DROP OF 0.75 VOLTS. LEADS 1-1, & 1-3 USE COL D.
   WITH 12/15 AMP CHARGER, MAXIMUM VOLTAGE DROP OF 0.75 VOLTS. LEADS 1-1, & 1-3 USE COL. E. TO MEET THE NFPA10 REQUIREMENT TO RETURN A FULLY DISCHARGED BATTERY TO 100% OF IT'S AMPERE-HOUR RATING WITHIN 24 HOURS USE COL. F
2. RUN #2 GENSET TO ANNUNCIATOR ALL LEADS, USE COL. A
3. FOR MULTIPLE TRANSFER SWITCHES, DUPLICATE RUN #1 FOR EACH SWITCH. DAISY CHAIN CONNECTION IS ACCEPTABLE PROVIDED WIRE SIZE & DISTANCE TO THE LAST SWITCH MEET THE SPECS IN NOTE 1.
4. INSTALL JUMPER BETWEEN TB2-1 & TB2-2.
5. CONTACTS RATED: 4 AMPS AT 30 VDC OR 120V MAX.
6. USE STRANDED TWISTED PAIR WIRES WHEN CONNECTING DATA1 AND DATA2 TO THE NETWORK.
7. TRANSFER SWITCH SHOWN CLOSED TO NORMAL BYPASS SWITCH SHOWN IN NEUTRAL POSITION.
8. CONNECT AN OPEN DRY CONTACT BETWEEN THE APPLICABLE TERMINAL AND COMMON (TB2-8). FOR REMOTE TEST, TRANSFER INHIBIT AND LOAD SHED, CLOSE TO ACTIVATE.
9. CONTACTS RATED: 2 AMPS AT 30 VDC OR 0.60 AMPS AT 120 VAC.
10. REFER TO 0300-0301 FOR INSTALLATION OF 0300-5929.
11. USE THE ADVENTER REMOTE TEMPERATURE PROBE (0193-0330).
12. THE FOLLOWING FAULT WILL CAUSE A BATTERY CHARGER ALARM OUTPUT:
    LOW BATTERY VOLTAGE, HIGH BATTERY VOLTAGE, LOW AC INPUT VOLTAGE, HIGH AC INPUT VOLTAGE, OVERCURRENT, HIGH CHARGER TEMPERATURE, BATTERY FAILURE, HIGH BATTERY TEMPERATURE (NOT AVAILABLE ON 2 AMP CHARGER).
13. NETWORK CONNECTIONS, 18 GA TWISTED PAIR OR CAT 5 CABLE. TOTAL NETWORK LENGTH CANNOT EXCEED 4000 FEET. UP TO 20 NODES CAN BE CONNECTED TO THE NETWORK. (NOTE: ANY COMMUNICATIONS WIRE CONNECTED TO THE GENSET MUST BE STRANDED CABLE.)
14. CUSTOMER SUPPLIED FUSED B+ SOURCE, USE AT LEAST 5 AMP FUSE. WIRE SIZE, USE COL A

No. 0630-1974 sh 10 of 10
Rev. N
Modified 2/2011

FIGURE 102. 1200 AMP TYPICAL INTERCONNECTION DIAGRAM (SHEET 10 OF 10)

This is a representative (generic) schematic/wiring diagram. For troubleshooting, refer to the schematic and wiring diagram package that was shipped with the transfer switch.

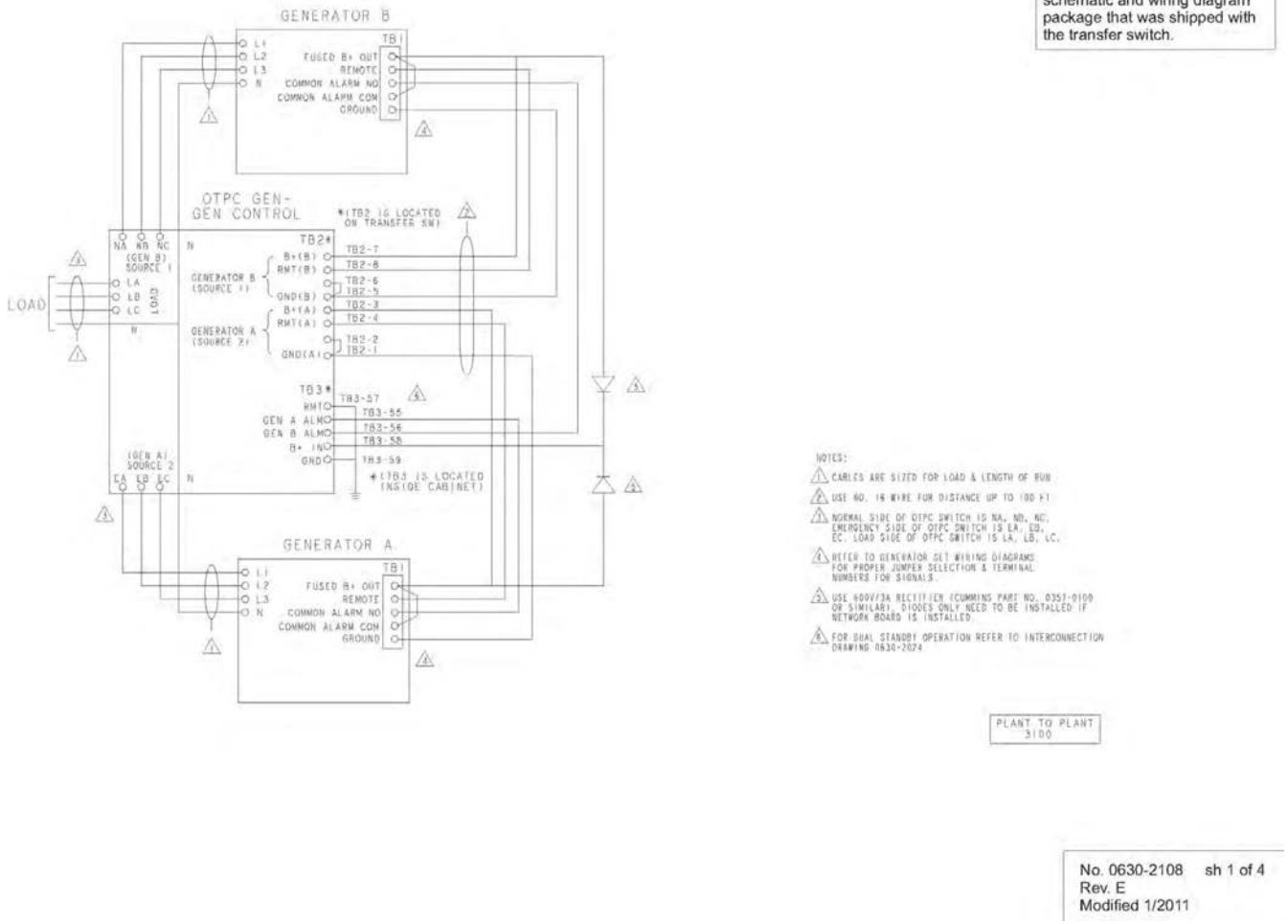

FIGURE 103. TYPICAL INTERCONNECTION DIAGRAM - GENERATOR-TO-GENERATOR, PLANT-TO-PLANT (SHEET 1 OF 4)

This is a representative (generic) schematic/wiring diagram. For troubleshooting, refer to the schematic and wiring diagram package that was shipped with the transfer switch.

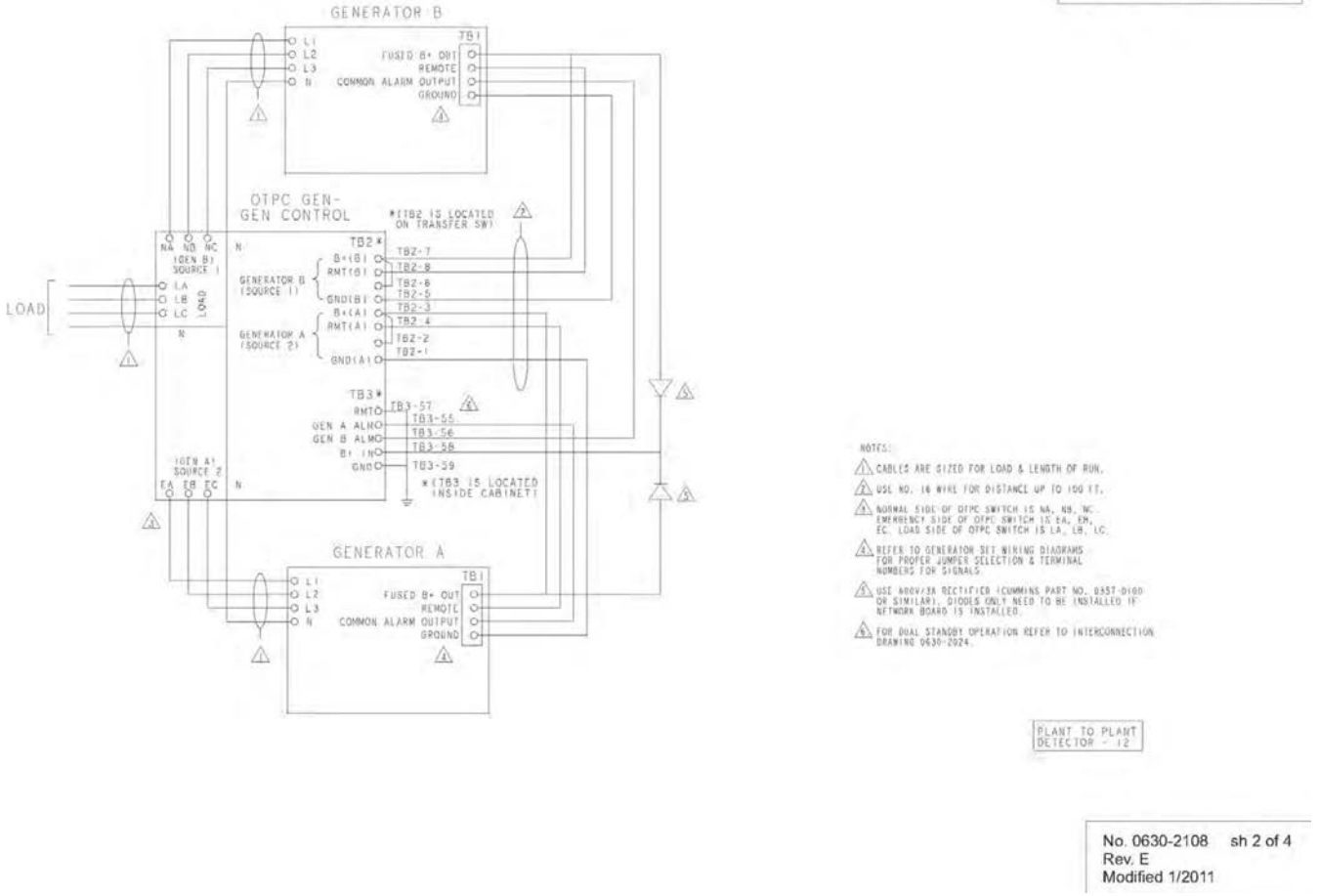

FIGURE 104. TYPICAL INTERCONNECTION DIAGRAM - GENERATOR-TO-GENERATOR, PLANT-TO-PLANT (SHEET 2 OF 4)

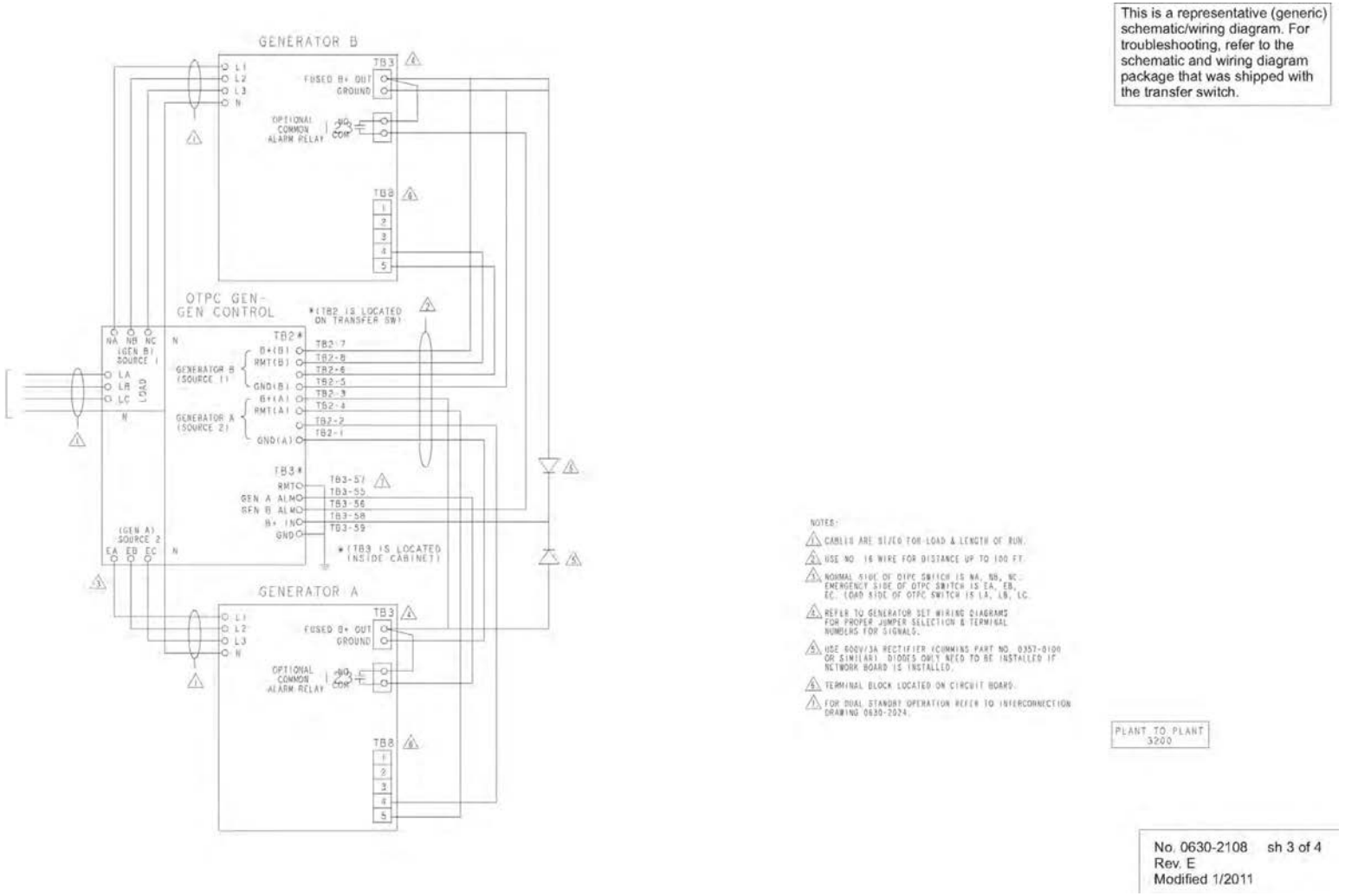

FIGURE 105. TYPICAL INTERCONNECTION DIAGRAM - GENERATOR-TO-GENERATOR, PLANT-TO-PLANT (SHEET 3 OF 4)

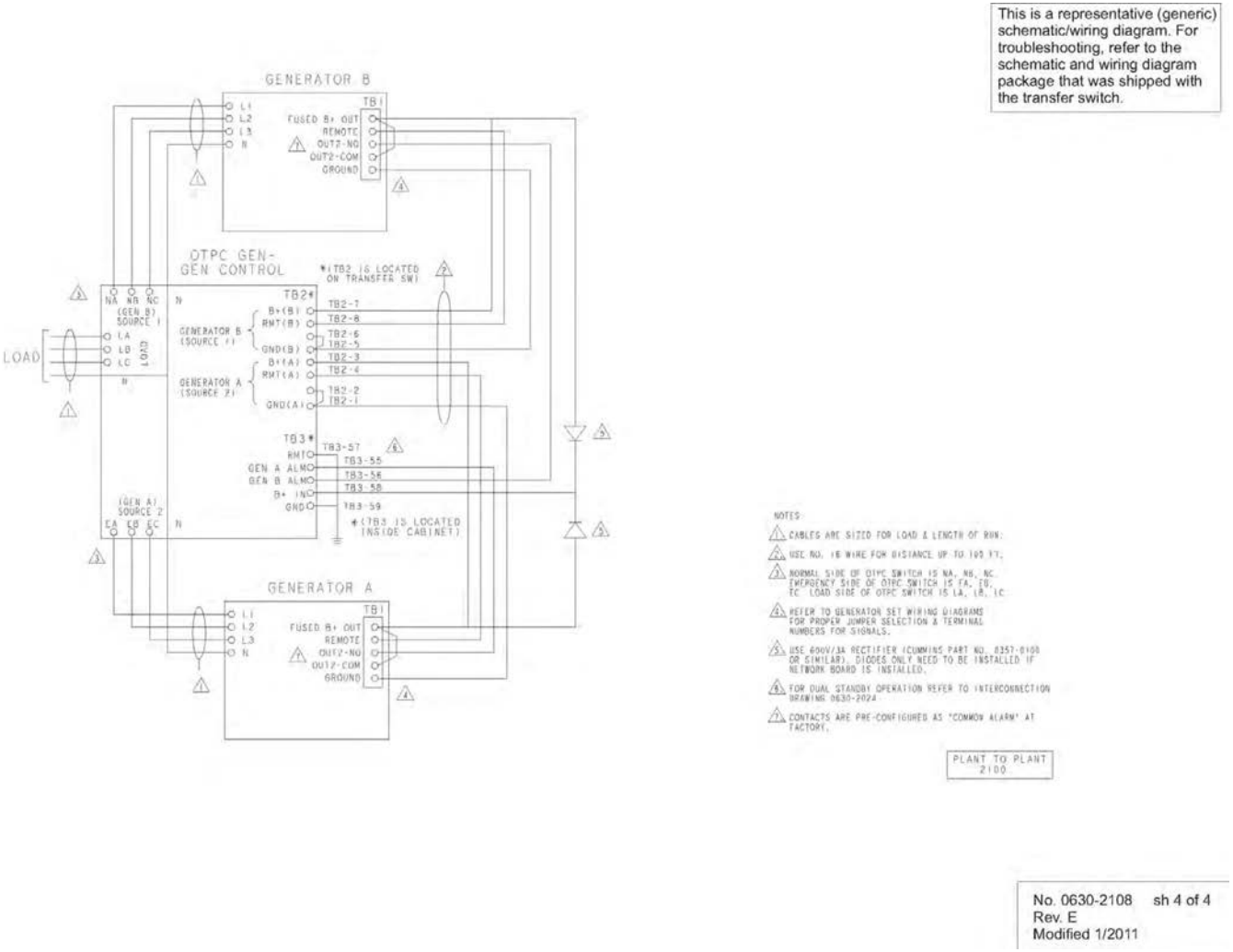

FIGURE 106. TYPICAL INTERCONNECTION DIAGRAM - GENERATOR-TO-GENERATOR, PLANT-TO-PLANT (SHEET 4 OF 4)

This is a representative (generic) schematic/wiring diagram. For troubleshooting, refer to the schematic and wiring diagram package that was shipped with the transfer switch.

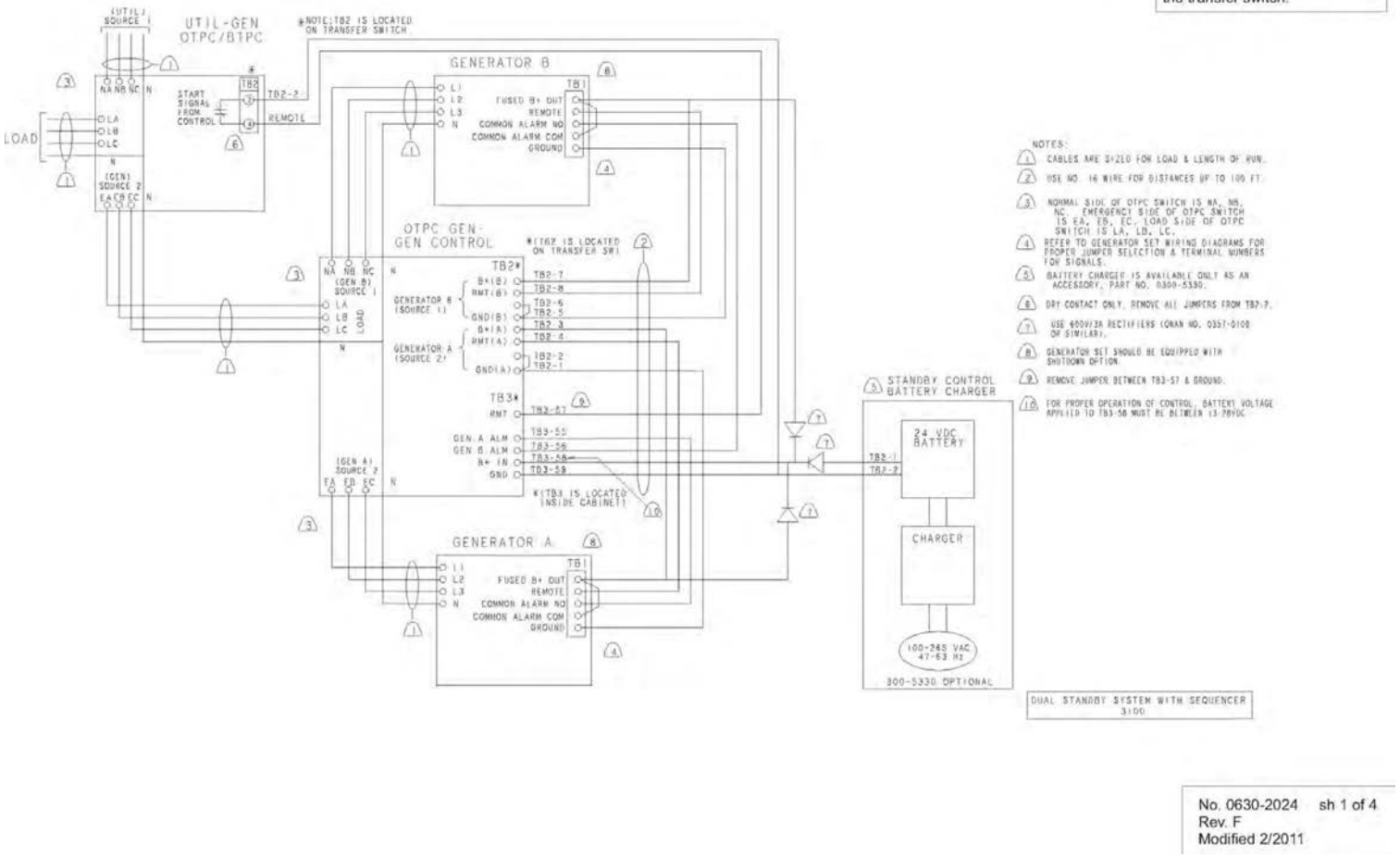

No. 0630-2024 sh 1 of 4
Rev. F
Modified 2/2011

FIGURE 107. TYPICAL INTERCONNECTION DIAGRAM - GENERATOR-TO-GENERATOR, DUAL STANDBY SYSTEM (SHEET 1 OF 4)

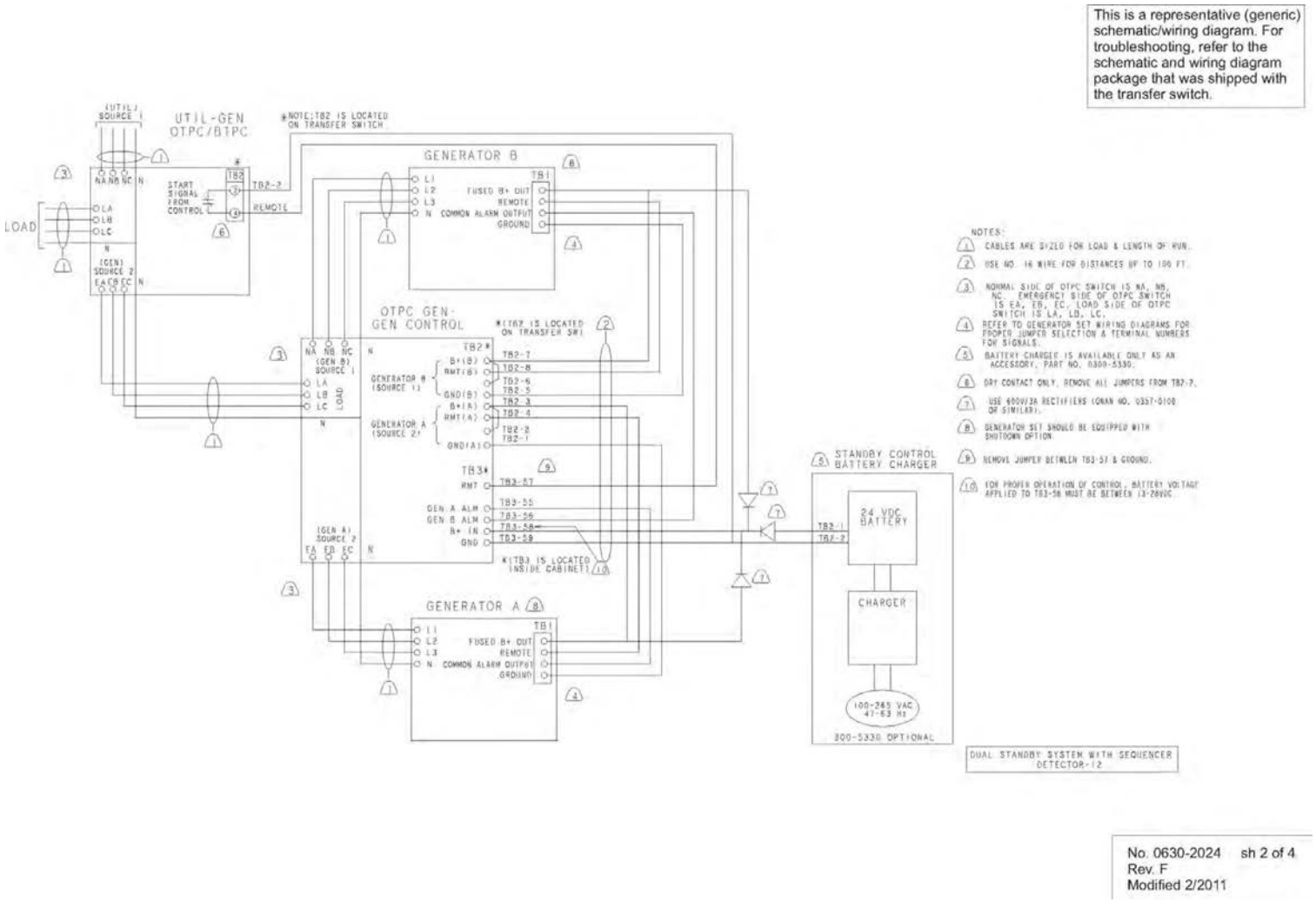

FIGURE 108. TYPICAL INTERCONNECTION DIAGRAM - GENERATOR-TO-GENERATOR, DUAL STANDBY SYSTEM (SHEET 2 OF 4)

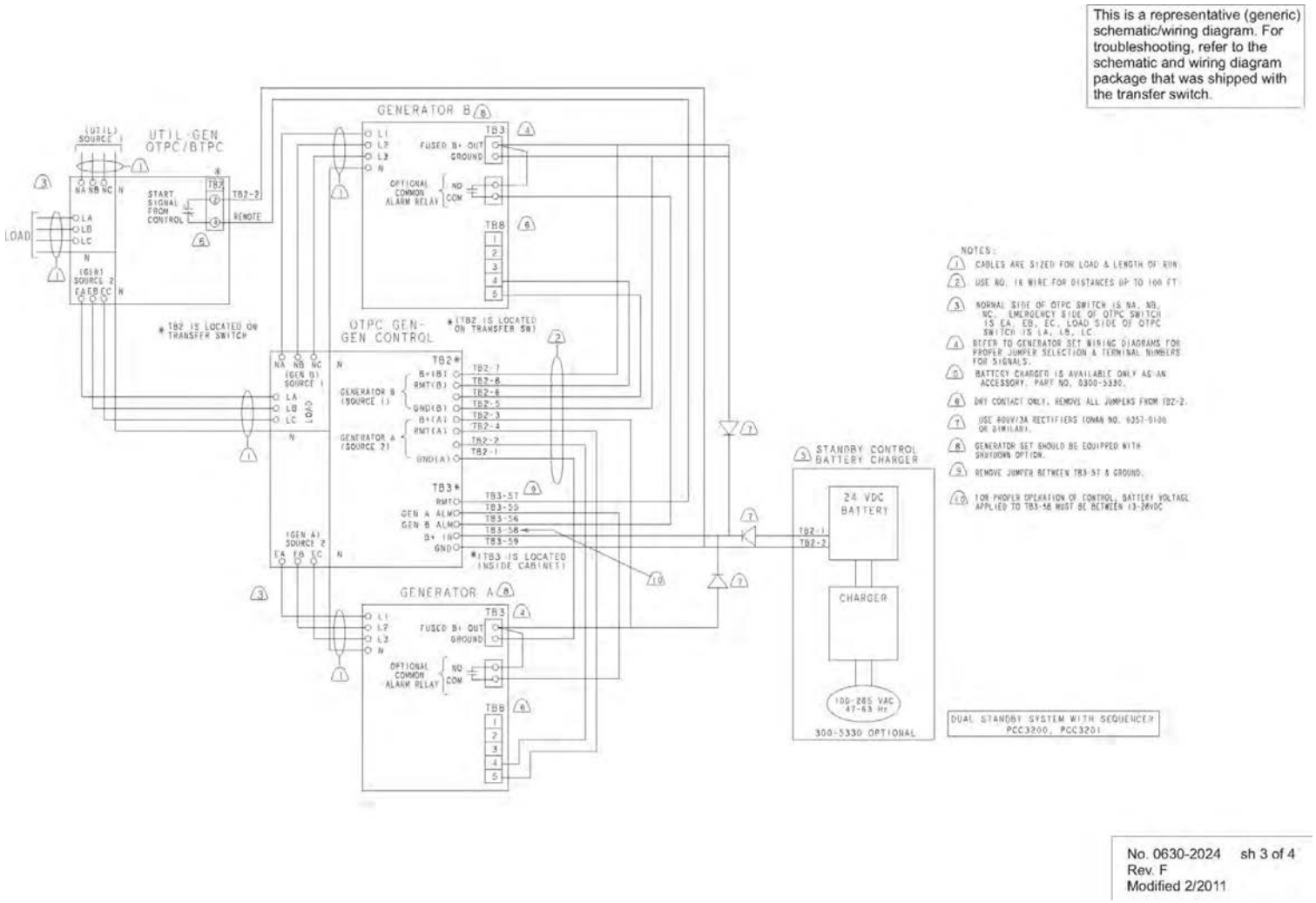

FIGURE 109. TYPICAL INTERCONNECTION DIAGRAM - GENERATOR-TO-GENERATOR, DUAL STANDBY SYSTEM (SHEET 3 OF 4)

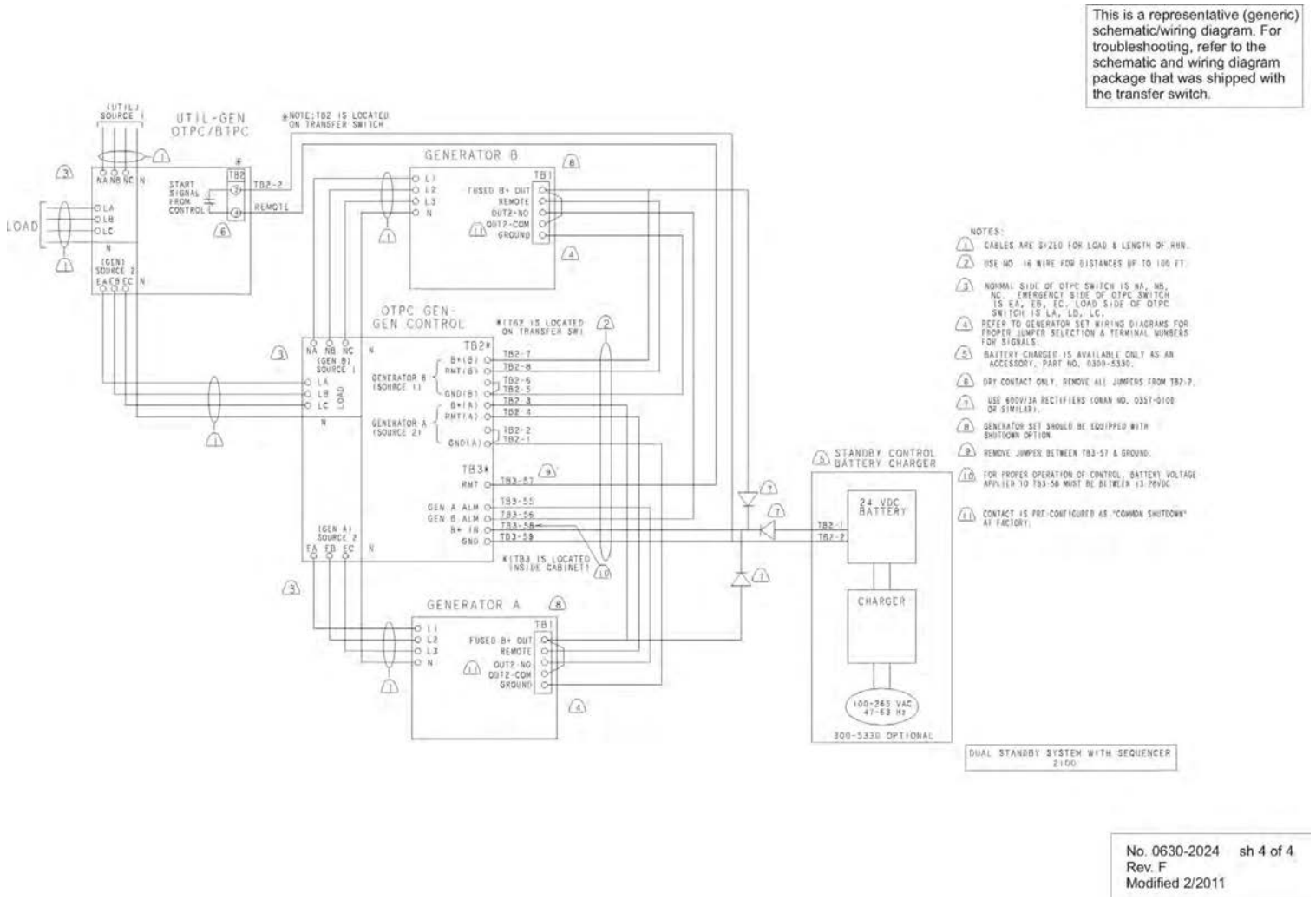

FIGURE 110. TYPICAL INTERCONNECTION DIAGRAM - GENERATOR-TO-GENERATOR, DUAL STANDBY SYSTEM (SHEET 4 OF 4)

www.cumminspower.com
Cummins, the "C" logo, and "Our energy working for you." are trademarks of Cummins Inc.
Copyright © 2013 Cummins Power Generation, Inc. All rights reserved.

Accessories

This Page Left Intentionally Blank

Owner Manual

Operator/Installation/Service/Parts

Our energy working for you.™

Cummins Power Generation

Accessory

PowerCommand® Universal Annunciator 300–5929

English – Original Instructions

1–2011

900–0301 (Issue 7)

Safety Precautions

⚠ DANGER ***High voltage is deadly. Installation and service of the network annunciator involves working with high voltage equipment. Installation and service must be performed by trained and experienced personnel working with such equipment. Disconnect the utility line from the transfer switch and disconnect power from the battery charger, day tank, and any other power equipment where connections are to be made.***

⚠ WARNING ***Accidental starting of the generator set while working on it can cause severe injury or death. Disconnect the battery cables to prevent accidental starting. Always disconnect the negative (–) cable first and connect it last to prevent arcing if a tool accidentally touches the frame or other grounded metal parts of the set while connecting or disconnecting the positive (+) cable. Arcing can ignite explosive hydrogen gas given off by the battery and cause severe injury. Ventilate the battery compartment before removing cables.***

Table of Contents

TITLE	PAGE
SAFETY PRECAUTIONS	**Inside Front Cover**
INTRODUCTION	**1**
About This Manual	1
Software Versions	1
How to Obtain Service	1
DESCRIPTION	**3**
General	3
Network Types	3
PCCNet Network	3
Modbus Network	4
Modbus Communications	4
Operation	5
Event Processing	5
Alarm Processing	5
INSTALLATION	**7**
General Information	7
Network Considerations	7
Routing of Cables	8
Custom Relays	12
Annunciator Installation	12
Replacing Legacy Annunciators	14
CUSTOMER OPTIONS	**17**
Options	17
Annunciator Configuration	18
Entering Configuration Mode	18
Configuration Functions	18
Selecting Predefined Configuration Tables	19
Reporting Battery Voltage	21
Selecting Negative/Positive Input	22
Configuring the Network Configuration Address	22
Configuring the Color and Flash Characteristics of individual Lamps	22
Configuring individual Lamps with An Audible Alert	23
Inverting Active Hardware Signals	23
Enabling Global Horn	23
Exiting Configuration Mode	23
Customer Faults	24
Remote Silence/Lamp Test	24
Remote Alarm	24

Table of Contents (continued)

TITLE	PAGE
TROUBLESHOOTING	**27**
Pre-Check	27
Troubleshooting	27
Incorrect Battery Voltage Sensing	27
Lamp Testing	27
All Indicators Fail to Light	28
One or More Failed Lamps	28
Input Fails to Light Lamp	28
Not All Lamps Display the Desired Characteristics	28
Lamps Are Lit At the Wrong Time	29
Excessive Battery Voltage Indications	29
Alarm Failure	29
The Alarm Sounds But No Lamps are Flashing	29
Remote/Silence Lamp Test Connection	29
Genset Fault Fails to Go Inactive	29
PARTS INFORMATION	**31**
MODBUS REGISTER TABLE	**33**

Introduction

ABOUT THIS MANUAL

This manual provides information for operating, installing, selecting customer options, and troubleshooting the universal annunciator control. A parts list is also included for all available service parts. Study this manual carefully and observe all warnings and cautions. Installing the control properly will contribute to better performance and safer operation.

SOFTWARE VERSIONS

Since it's initial release, the universal annunciator's software has been upgraded. The upgrades have included changed features and the ability of the annunciator to be connected to additional devices. Before connecting to a device, always make sure your annunciator includes the appropriate software. Below are some things that need to be considered because of changes in software.

- Starting with version 1.06, the predefined configuration factory defaults are set to the parameters in the NFPA 110 table. The factory defaults for earlier versions of software are set to the parameters in the Legacy NFPA 110 table. For more information, see pages 19 and 20.
- Starting with version 2.00, universal annunciator communication is available using either a PCCNet network or a Modbus network. Only the PCCNet network was available in earlier versions.
- When connected to a PCC2100, then PCC2100 version 2.5 or greater is required to use the universal annunciator.

NOTE: Use InPower to view the software version of your annunciator.

HOW TO OBTAIN SERVICE

When the universal annunciator requires servicing, contact the nearest dealer or distributor. Factory-trained Parts and Service representatives are ready to handle all your service needs.

If you are unable to locate a dealer or distributor, consult the yellow Pages. Typically, our distributors are listed under:

Generators-Electric,
Engines-Gasoline or Engines-Diesel, or
Recreational Vehicles-Equipment,
Parts and Service.

For the name of your local Cummins Power Generation distributor in the United States or Canada, call 1–800–888–6626 (this automated service utilizes touch-tone phones only).

For outside North America, call Cummins Power Generation, 1-763-574-5000, 7:30 AM to 4:00 PM, Central Standard Time, Monday through Friday. Or, send a fax to Cummins Power Generation using the fax number 1–763–528–7229.

⚠WARNING

Incorrect service or parts replacement can result in severe personal injury, death, and/or equipment damage. Service personnel must be trained and experienced to perform electrical and/or mechanical service.

THIS PAGE INTENTIONALLY LEFT BLANK

Description

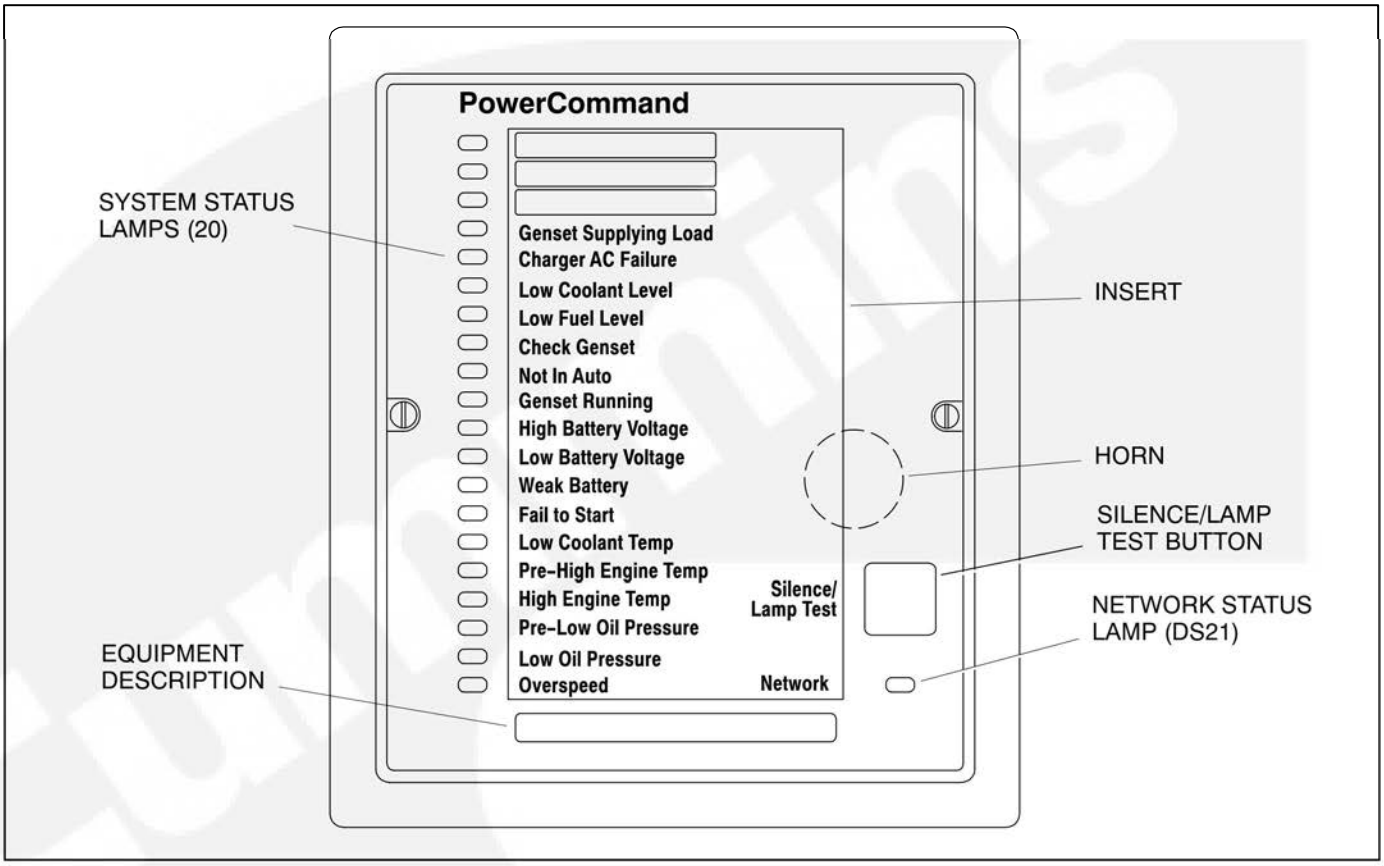

FIGURE 1. ANNUNCIATOR PANEL

GENERAL

The universal annunciator (see Figure 1) provides lamps and a horn to annunciate the operating status and fault conditions of an emergency power system. It is designed for connection to either a 12 VDC or a 24 VDC control system. It can be configured to be either a positive or negative signal device.

This annunciator can be used to replace legacy annunciators 300–4510 ANN (negative signal) and 300–4511 ANP (positive signal).

Two versions of the universal annunciator are available.

- 300–5929–01 = Panel Mounted
- 300–5929–02 = Panel with Enclosure

NETWORK TYPES

The universal annunciator can communicate using either a PCCNet or a Modbus network. The functionality differs, depending upon which network is being used.

The Network LED (DS21) is not configurable and does not activate the horn. With a Modbus network, the Network LED is used as a Modbus activity LED.

PCCNet Network

When connected to a PCCNet, multiple devices can broadcast their NFPA 110 status. The annunciator monitors broadcasts and ORs together all sources along with its discrete inputs and displays the OR's status on its 20 system status LEDs. When each device on the PCCNet network broadcasts its NFPA110 status logical, it will only activate a bit if the device is the source of that status. The annunciator does the same thing. It only broadcasts the status of its direct wired inputs. The annunciator will not OR together all sources and send the information to other devices.

When the annunciator powers up, the network LED is off. If a network device is not found (such as with Legacy applications), it remains off.

When the annunciator starts to receive status information from one or more devices, it turns green. The annunciator keeps track of the number of devices from which it has received status information. If six seconds elapses without receiving status information from each device, the network LED turns red. If the device count goes back to the previous high value, the network LED changes from red back to green.

Modbus Network

When connected to a Modbus network, the annunciator acts as a Modbus slave. The Modbus master must request updates from the annunciator. All communications with the annunciator are done via request/response. The annunciator does not initiate any communications.

A single Modbus master can send status data to up to four annunciators on a single Modbus network. Each annunciator ORs together the status data with its discrete inputs and displays the status on its 20 LEDs. When the Modbus master reads the annunciator status, it can read either the status of the direct wired inputs or the status of the LEDs.

When the annunciator powers up, it turns off the network LED on the front panel. When there is Modbus network activity, the network LED (DS21) on the front panel turns green (or stays green). After ten seconds of no network activity, the LED turns off.

If Modbus data has been received and the ten-second timer has expired or the annunciator has received bad data, then the network LED turns red and the active system status LEDs turn off. If this occurs, the system status LEDs with configured audible alarms will display a quick flash until communications are reestablished and the network LED becomes active again or the Silence button is pressed. If the network LED is red and data is received, then the network LED will again turn green and the ten-second timer starts. The updated status is then displayed by the system status LEDs.

Modbus Communications

Before Modbus can be used for communications, the universal annunciator must be set up for Modbus communications by selecting the Modbus NFPA 110 configuration table. For more information, see “Annunciator Configuration” on page 18.

With Modbus communications, there is a Remote Terminal Unit (RTU) two-wire RS-485 master/slave multi-drop network configuration, where the annunciator is defined as the slave.

Port communications, by default, occur at a baud rate of 19,200 baud and even parity. The baud rate and parity are configurable via Modbus registers.

A PLC can be the master device in the Modbus network. The Modbus node address is configurable and is set to node 1 by default.

A list of available annunciator registers is included at the back of this manual (see “Modbus Register Table” on page 33).

The controller is designed to respond within 100 ms of a request for information from the master.

OPERATION

- Table 1 lists the conditions monitored by the annunciator. The status lamps always annunciate the present state of each condition.
- In PCCNet mode, the annunciator broadcasts information a minimum of every five seconds and whenever a change occurs.
- Press the Silence/Lamp Test button to silence the horn, if activated. Several annunciators serving one emergency power system can be interconnected so that all the horns can be silenced from any location. Subsequent faults will cause the horn to sound again.
- All indicator lamps should light (turn green) when you press the Silence/Lamp Test button. When you press and hold the Silence/Lamp Test button, all indicator lamps will cycle through the colors (green, amber, red) and then display the current configuration. When the button is released, the current status of just the hard-wired inputs are displayed for one second.
- Pressing the Silence/Lamp Test button does not reset the switch or sensor that is providing the fault signal. The lamp for the associated fault will continue to remain in the active condition (solid or flashing) until the fault is corrected. After correcting the fault condition, the annunciator lamp goes out.

  NOTE: If a lamp is configured with the Invert Hardware Active Signals function, the color and flash characteristics are displayed during normal operation and the lamp goes out during the active condition.
- When the annunciator powers up, it turns the Network lamp off. If it never finds another network device (as with legacy applications), it remains off. When communications with another device are established or re-established, the Network lamp turns green. If communications with a device broadcasting annunciator data are lost for 30 seconds (PCCNet) or 10 seconds (Modbus), the Network lamp turns red; the horn will not sound.
- With legacy annunciator installations, normal status could be annunciated with Normal Utility Power and Normal Battery Voltage lamps. When replacing a legacy annunciator with this annunciator, this can be accomplished either by using the Check Genset and Weak Battery inputs or by using one of the Customer Fault inputs for Normal Utility Power.

EVENT PROCESSING

The 20 status lamps always annunciate the present state of each event. Unless a lamp is configured to invert its hard-wired inputs, the lamp displays its configured color and flash characteristics when the event occurs. Lamps that are configured to invert hard-wired inputs display their color and flash characteristics during normal operation.

Alarm Processing

An audible alarm sounds anytime an event that is configured as audible becomes active. An alarm can be deactivated by:

- Pressing the Silence/Lamp Test pushbutton
- Receiving a silence command via the digital input
- Receiving a silence command via the PCCNet network
- Receiving a silence command via the Modbus network

If another audible alarm event occurs while a silenced lamp is active, the alarm again sounds.

Because the alarm remains active until the condition is corrected (the event becomes inactive), the lamp normally continues to display its color and flash characteristics after the Silence/Lamp Test pushbutton is pressed. However, if a lamp is configured as audible, the event occurs, and then it becomes inactive before the Silence/Lamp Test pushbutton is pressed, the alarm will sound but the lamp will not continue to flash its configured color and flash characteristics. Instead, it will display a quick blip (0.2 seconds On and 1.8 seconds Off).

TABLE 1. ANNUNCIATOR CONDITIONS MONITORED

STANDARD LEGEND	CONDITION INDICATED	STATUS LAMP	
		NEW INSTALLATION	LEGACY REPLACEMENT*
Customer Fault 1	Customer selected fault condition	DS1	DS18
Customer Fault 2	Customer selected fault condition	DS2	DS19
Customer Fault 3	Customer selected fault condition	DS3	DS20
Genset Supplying Load	Genset is supplying the load	DS4	DS6
Charger AC Failure	Battery charger is signaling a failure	DS5	DS15
Low Coolant Level	Coolant level below preset minimum	DS6	DS17
Low Fuel Level	Fuel level below preset minimum	DS7	DS16
Check Genset	Use InPower or the genset keypad to check the genset for fault conditions	DS8	NA
Not in Auto	Switch on the control is in the Not in Auto position. The genset will not start automatically.	DS9	DS14
Genset Running	Generator has output voltage	DS10	DS4
High Battery Voltage**	Battery voltage too high (overcharging)	DS11	DS1
Low Battery Voltage**	Battery voltage too low (poor battery or charger failure)	DS12	DS2
Weak Battery	Genset battery is weak	DS13	NA
Fail to Start	Engine fails to start after full cranking cycle (overcrank)	DS14	DS13
Low Coolant Temp	Engine coolant heater has malfunctioned	DS15	DS11
Pre-High Engine Temp	Engine coolant approaching maximum temp.	DS16	DS9
High Engine Temp	Genset has shut down due to high coolant temp.	DS17	DS10
Pre-Low Oil Pressure	Oil pressure approaching minimum	DS18	DS7
Low Oil Pressure	Genset has shut down due to low oil pressure	DS19	DS8
Overspeed	Engine has shut down due to overspeed	DS20	DS12
Normal Battery Voltage	Battery Voltage OK	NA	DS3
Normal Utility Power	Utility power supplying the load	NA	DS5

* "Legacy Replacement" refers to replacing 300–4510 ANN negative signal and 300–4511 ANP positive signal annunciators with Universal Annunciator 300–5929.

** Battery Voltage Specification (The setting must be low or high for a minimum of five seconds):
Low Battery Voltage Setting: 12 ± 0.5 VDC for 12-volt system; 24 ± 1 VDC for 24-volt system
High Battery Voltage Setting: 16 ± 0.5 VDC for 12-volt system; 32 ± 1 VDC for 24-volt system

Switch Inputs:
Positive Sense Mode: Input impedance is 1.82 Kohms to ground; maximum input voltage = 31 VDC.
Negative Sense Mode: Input impedance is 1.82 Kohms to Bat+; inputs are at Bat+ level when open.
Sink/Source current threshold for detection: 150 uA minimum, 3 mA maximum.
Maximum allowable sink/source current: 20mA.
Power Supply should be between 6.5 VDC and 31 VDC.

Installation

GENERAL INFORMATION

A block diagram of a typical installation is shown in Figure 2. The installation shows a typical PCCNet network that includes a genset that is connected to four automatic transfer switches (ATSs) and a battery charger. In this example, the annunciator has inputs from both the PCCNet network and from hard-wired inputs.

Network Considerations

The total network length cannot exceed 4000 feet (1219 meters). Depending on the installation, either a cable with a single twisted pair or two twisted pairs can be used. The following are recommended, but are not mandatory: Belden 9729 or equivalent (two pair of stranded 24 AWG (or larger) twisted pair cable with shield). Unshielded cable may not provide the maximum distance in a noisy environment. Care must be taken when selecting the appropriate cable.

In order to meet NFPA 37 requirements, stranded copper cable must be used.

The network cable must be used only for transmitting network data and for installations with remote isolated power supplies to provide common logic reference. The second twisted pair is meant only to be used for a common logic reference. It cannot be used to provide power to the annunciator boards. Power to the annunciator must be provided via TB1-16 and one of the TB1 GND connections.

J2-1 can be interconnected to provide a common logic reference when applicable. J2-1 can be used to interconnect two controls where one of the controls uses a floating DC Power Supply not connected to Earth ground and the other is connected to Earth ground (see Figure 3). Otherwise, using J2-1 can induce a ground loop.

If a single power source (see Figure 4) is used, then care must be taken to make sure that at least minimal voltage is supplied to all boards by taking into consideration the wire gauge, current used, and distance traveled. A single power source should be considered for only a small number of controllers. Otherwise, a separate floating power supply must be used.

J2-3 and J2-4 is a twisted pair and must be interconnected between all controllers on the network to transmit network data.

J2-2 and J2-5 should not be connected to the network. J2-2 is for factory use only.

Each cable shield or interconnected cable shield must be connected to GND at only one point to prevent ground loops.

INPUT PIN	DESCRIPTION
TB1-15	GND
TB1-16	BATT In
TB1-17	GND
TB1-18	GND
J2-1	GND
J2-2	Factory Use Only
J2-3	RS-484 Data A
J2-4	RS-485 Data B
J2-5	No Connection

Although a typical network installation includes only one annunciator, additional annunciators can be installed. The Network Configuration Address function can be used to configure each annunciator with one of four different addresses. This feature allows annunciators to display different network information, depending on the address assigned. For more information, see page 22.

When two or more annunciators serve the same emergency power system, all of the terminals marked TB1-10 (new annunciator installations) or TB1-20 (legacy annunciator replacement installations) must be interconnected so that the horns can all be silenced from any location.

ROUTING OF CABLES

Communication over stranded unshielded twisted pair (UTP) could be distorted by external sources of electromagnetic interference (EMI), especially if the conductors are physically degraded in any way. To avoid or minimize this interference, observe the following guidelines.*

⚠ CAUTION ***Electromagnetic interference (EMI) can cause communication signal distortion, which can cause network failure and unintended equipment operation. Read and follow these wiring guidelines.***

Observe all local wiring codes. Refer to the NEC (NFPA70) section on *Wiring Methods and Materials* for general wiring methods and procedures.

Routing: Whenever possible, cabling should be installed over corridor areas or along lines that are parallel to the contours of buildings. All deviations from straight runs should be made at right angles. Keep wire away from sharp, abrasive, and hot surfaces.

Separation from sources of EMI: All cabling should be installed in such a way as to comply with the minimum separations from AC power sources.

In general, communications wiring should not be located in spaces that are shared with electrical panels, transformers, or other high voltage equipment.

Tension: All cabling should be free from tension at both ends, as well as over the length of each run.

Stranded Twisted pairs: All terminations should be made in such a way as to **minimize the extent to which each stranded twisted pair is unraveled at the point of its physical termination**. Allow no more than 0.5 inch (13 mm) of exposed untwisted pairs.

Cable bends: Cable bends, or radii, should be no less than eight times the cable diameter.

Harsh, hazardous, or corrosive environments: Communications wiring should not be installed where vapors, fumes, corrosives, dusts, or other industrial byproducts are present without taking appropriate precautions to protect the cables. Installers and cabling manufacturers of the materials involved must be consulted in all such cases.

Grounding and bonding: When shielded cables are used, all applicable regulations for grounding and bonding as defined by local building codes for electrical materials must be strictly adhered to. In some cases, qualified installers or manufacturers will make related recommendations in the interest of human safety or mechanical protection of installed cables (e.g., shielding against rodents).

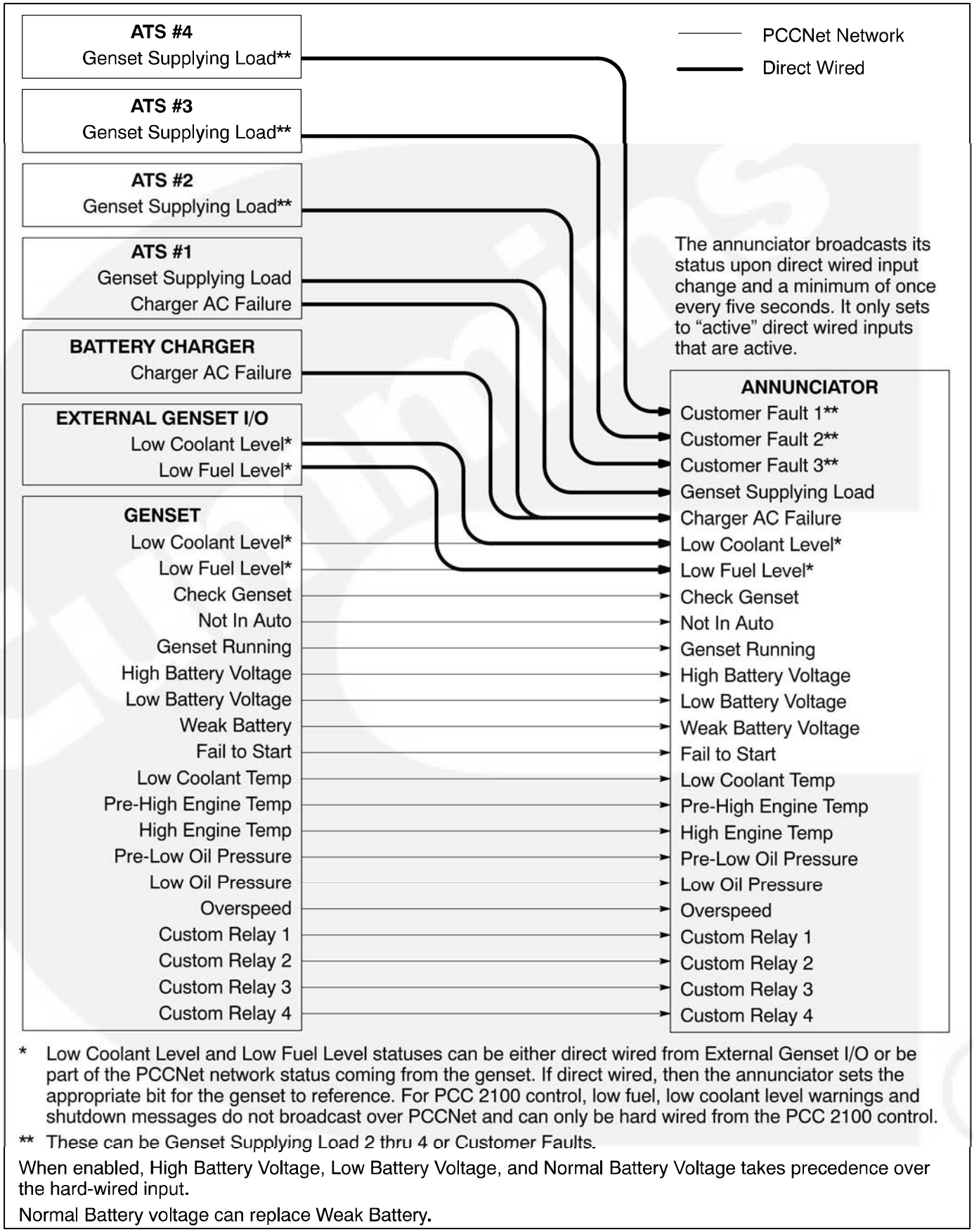

* Low Coolant Level and Low Fuel Level statuses can be either direct wired from External Genset I/O or be part of the PCCNet network status coming from the genset. If direct wired, then the annunciator sets the appropriate bit for the genset to reference. For PCC 2100 control, low fuel, low coolant level warnings and shutdown messages do not broadcast over PCCNet and can only be hard wired from the PCC 2100 control.

** These can be Genset Supplying Load 2 thru 4 or Customer Faults.

When enabled, High Battery Voltage, Low Battery Voltage, and Normal Battery Voltage takes precedence over the hard-wired input.

Normal Battery voltage can replace Weak Battery.

FIGURE 2. TYPICAL ANNUNCIATOR INSTALLATION (PCCNET NETWORK)

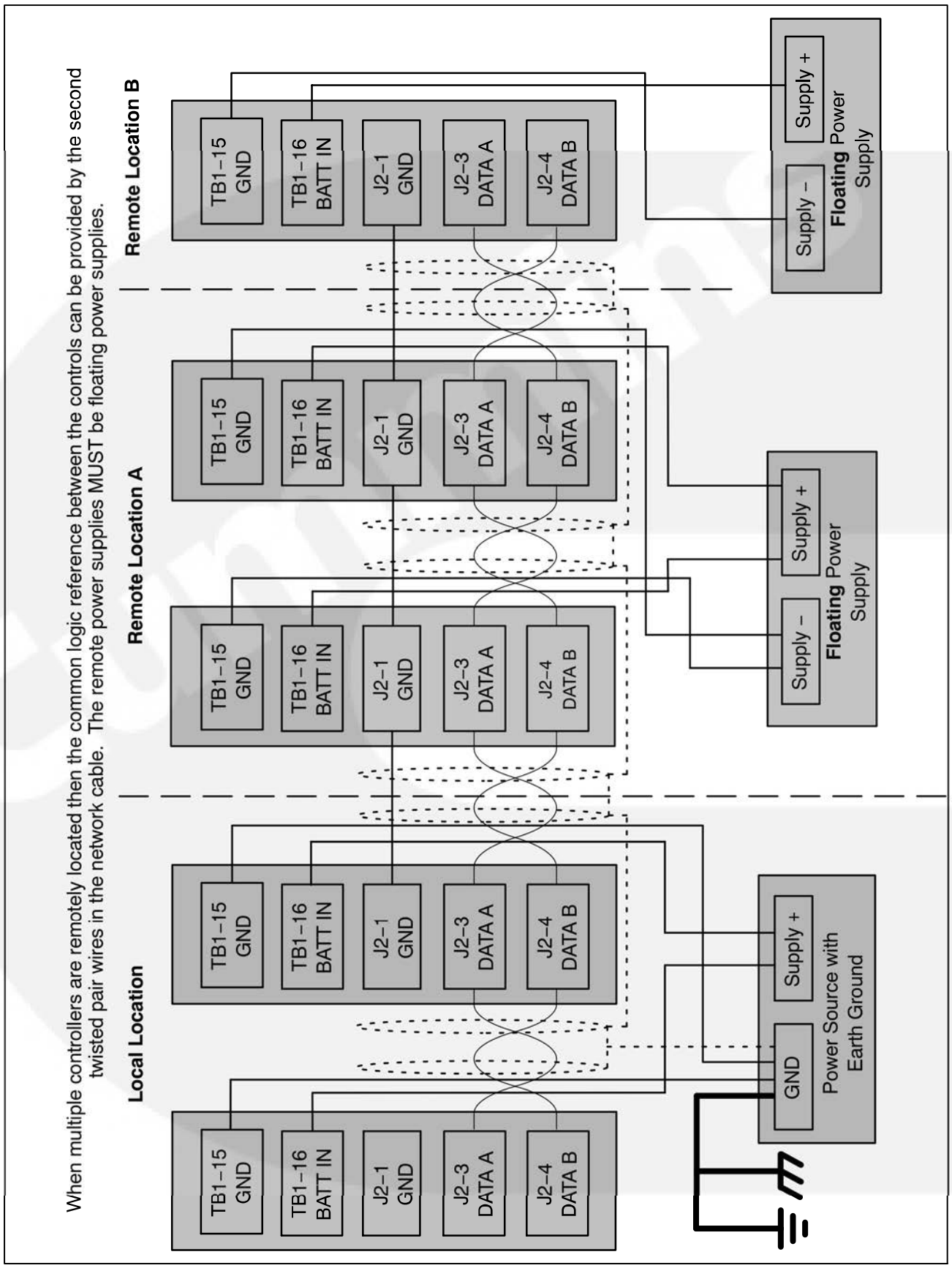

FIGURE 3. MULTIPLE REMOTE CONTROLLERS WIRING DIAGRAM

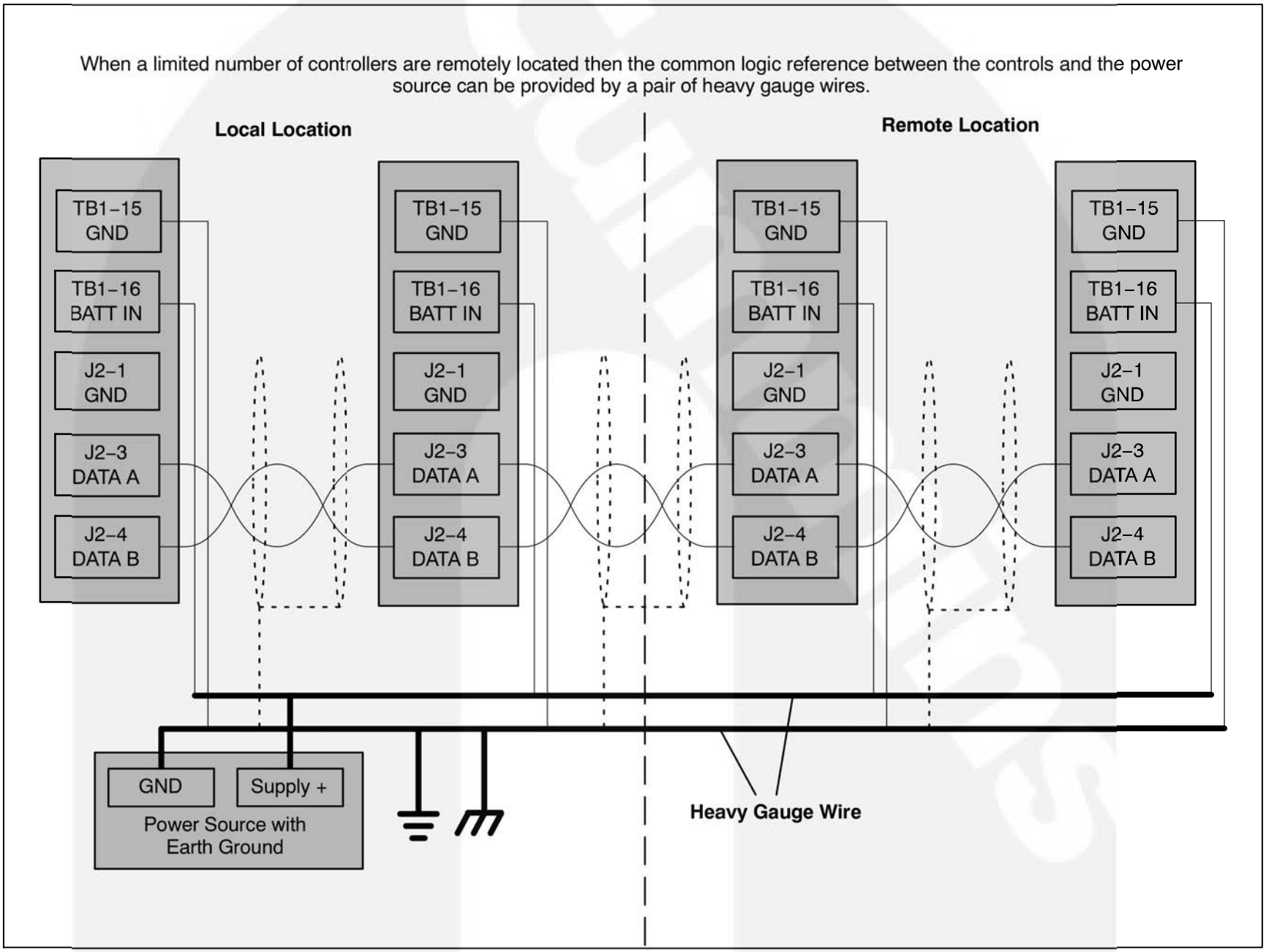

FIGURE 4. MULTIPLE REMOTE CONTROLLERS WITH ONE POWER SOURCE WIRING DIAGRAM

Custom Relays

The annunciator can control four custom (N.O.) relays that can be used as custom outputs that are controlled by external devices.

For example, when a specified event becomes active, a message can be sent by the external device (for example, a PCC1301 control) to the annunciator to turn the relay on or off. Only one event per relay is allowed. Refer to your genset Service Manual for information on how to set up the genset controller to control the relays.

The rating for the custom relays is 0.2 amps @ 125 VAC, 1A @ 30 VDC.

Wiring for these relays is done via the TB3 connector (see Figure 6) — TB3-1 to TB3-2 for relay 1, TB3-3 to TB3-4 for relay 2, etc.

CONNECTION	DESCRIPTION
TB3-1	Custom Relay 1, Contact A
TB3-2	Custom Relay 1, Contact B
TB3-3	Custom Relay 2, Contact A
TB3-4	Custom Relay 2, Contact B
TB3-5	Custom Relay 3, Contact A
TB3-6	Custom Relay 3, Contact B
TB3-7	Custom Relay 4, Contact A
TB3-8	Custom Relay 4, Contact B

ANNUNCIATOR INSTALLATION

Select a location for mounting the annunciator that is **accessible**. Make sure all components can be **easily removed for service**. The annunciator should be mounted in an environment that has a temperature range of –40° to 176°F (–40° to 80°C) and relative humidity between 10 and 95%. The power supply input voltage must be from 6 to 31 VDC (reverse protected).

1. Remove the annunciator panel from the control box.

2. Locate the desired location on the wall and use the box as a template to mark the required holes (see Figure 5). Be sure to check for wiring, plumbing, and gas lines behind the wall before cutting or drilling.

WARNING Drilling into utility lines can cause severe personal injury or death. Make sure no wires, plumbing, or gas lines run behind the mounting area before drilling the mounting holes.

3. Drill the mounting holes and mount the box securely to the wall. For flush mounting, the front edges of the box should be flush with the surface of the wall.

4. Remove knock-outs, as needed for wiring, from the top and/or bottom of the control box.

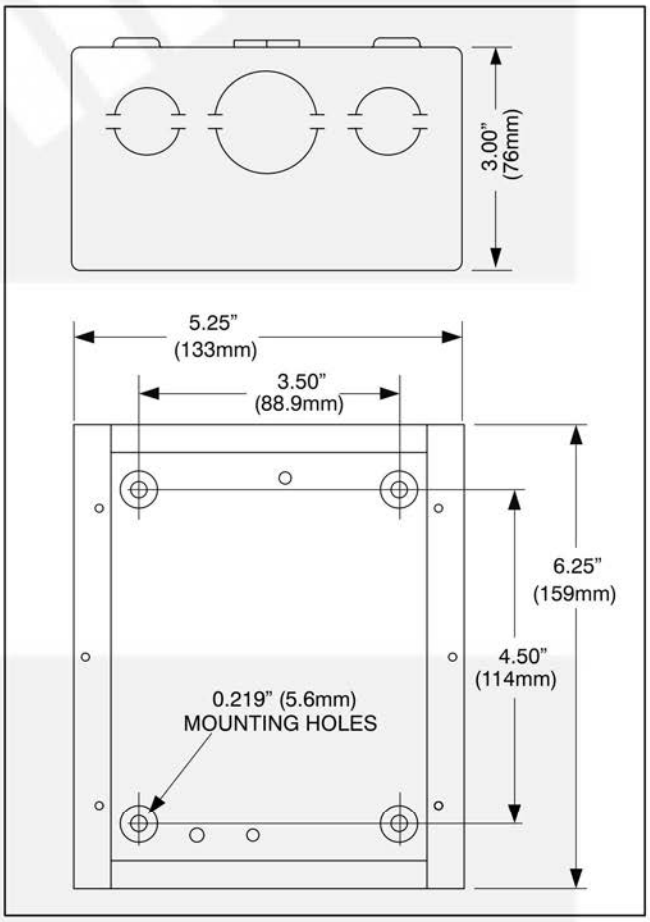

FIGURE 5. ANNUNCIATOR CONTROL BOX FOOTPRINT

DANGER High voltage is deadly. Installation and service of the network annunciator involves working with high voltage equipment. Installation and service must be performed by trained and experienced personnel working with such equipment. Disconnect the utility line from the transfer switch and disconnect power from the battery charger, day tank, and any other power equipment where connections are to be made.

⚠WARNING ***Accidental starting of the generator set while working on it can cause severe injury or death. Disconnect the battery cables to prevent accidental starting. Always disconnect the negative (–) cable first and connect it last to prevent arcing if a tool accidentally touches the frame or other grounded metal parts of the set while connecting or disconnecting the positive (+) cable. Arcing can ignite explosive hydrogen gas given off by the battery and cause severe injury. Ventilate the battery compartment before removing cables.***

5. Before making any wiring connections, disconnect the utility line from the transfer switch. Make sure the genset cannot start by pressing the RUN/STOP switch to STOP and by disconnecting the starting battery (negative [–] battery cable first). Disconnect the power to the battery charger.

6. Route the wiring from the annunciator to the genset, transfer switch, and battery charger (see Table 2). Do not route wiring in the same conduit as AC wiring. Allow pigtails of at least 12 inches (304 mm) at each end for connections.

7. Connect the auxiliary switches to the transfer switch, the battery charger malfunction switch, and the customer faults to GROUND for negative signal annunciators and to B+ for positive signal annunciators (see Table 2).

8. When two or more annunciators serve the same emergency power system, interconnect all the terminals marked TB1-10 (new annunciator installations) or TB1-20 (legacy annunciator replacement installations) so that the horns can all be silenced from any location. The connections are made to TB1-10 on the new annunciators.

NOTE: Pressing the Silence/Lamp Test button silences all horns of the connected annunciators but will only test the lamps of the annunciator whose button is pressed.

9. Apply power to the annunciator. When power is applied to the annunciator,

   a. Lamps DS1 thru DS21 cycle on and off, displaying the available colors (green, amber, red).

   b. LED N3 on the back of the control board (see Figure 6) starts flashing (green – one flash per second), indicating that the annunciator is in Running Mode.

   c. When the annunciator establishes communications with another device, the Network lamp (DS21) turns green.

10. Check the lamp characteristics on the annunciator control board and, if necessary, change the configuration to meet the needs of your installation (see “Annunciator Configuration” on page 18). Make sure that the annunciator is properly set up for the correct negative or positive input, reporting battery voltage, and predefined configuration table.

11. Press the Silence/Lamp Test button. All indicator lamps should light (turn green). Press and hold the Silence/Lamp Test button to cycle through the colors (green, amber, red) and then the current configuration is displayed.

12. Secure the annunciator to the control box with the screws provided with the annunciator.

13. Reconnect the utility line to the transfer switch, reconnect the battery to the generator set (negative [–] battery cable last), reconnect the battery charger, and return the generator set to automatic standby.

REPLACING LEGACY ANNUNCIATORS

The following describes how to replace a 300–4510 ANN negative signal or 300–4511 ANP positive signal annunciator with this annunciator.

⚠ DANGER ***High voltage is deadly. Installation and service of the network annunciator involves working with high voltage equipment. Installation and service must be performed by trained and experienced personnel working with such equipment. Disconnect the utility line from the transfer switch and disconnect power from the battery charger, day tank, and any other power equipment where connections are to be made.***

⚠ WARNING ***Accidental starting of the generator set while working on it can cause severe injury or death. Disconnect the battery cables to prevent accidental starting. Always disconnect the negative (–) cable first and connect it last to prevent arcing if a tool accidentally touches the frame or other grounded metal parts of the set while connecting or disconnecting the positive (+) cable. Arcing can ignite explosive hydrogen gas given off by the battery and cause severe injury. Ventilate the battery compartment before removing cables.***

1. Disconnect the utility line from the transfer switch. Make sure the genset cannot start by pressing the RUN/STOP switch to STOP and by disconnecting the starting battery (negative [–] battery cable first). Disconnect the power to the battery charger.

2. Remove the existing annunciator panel from the control box. Tag and remove the wire connections. Examine the wires for damage and replace, if necessary.

3. Remove the new annunciator panel from the control box.

4. If necessary, replace the existing control box with the control box included in this kit and remove knock-outs, as needed for wiring, from the top and/or bottom of the control box.

5. Connect the existing wires to the new annunciator. Refer to Table 2 on specifics on wiring the annunciator. The battery is connected to the TB1-16 terminal in both 12 volt and 24 volt systems. If battery check is not desired, the three lamps can be used for custom indications, using TB2-4, TB2-5, and TB2-6.

6. Modify the insert card to match the installation. Text can be added to the three blank boxes located at the top of the insert. If the predefined legend is not desired, text can be covered with white tape and the desired text written on the tape. In addition, the back of the insert has all blank spaces for writing text. In a legacy annunciator replacement, the modifications shown in Table 3 are typical.

7. Apply power to the annunciator. When power is applied to the annunciator,

   a. Lamps DS1 thru DS21 cycle on and off, displaying the available colors (green, amber, red).

   b. LED N3 on the back of the control board (see Figure 6) starts flashing (green – one flash per second), indicating that the annunciator is in Running Mode.

8. Press the Silence/Lamp Test button briefly. All indicator lamps should light (turn green).

9. Check the lamp characteristics on the annunciator control board and, if necessary, change the configuration to meet the needs of your installation (see “Annunciator Configuration” on page 18). Make sure that the annunciator is properly set up for the correct negative or positive input, reporting battery voltage, and predefined configuration table. Standard default configurations for the lamp and horn settings are set at the factory.

10. Secure the annunciator to the control box with the screws provided with the annunciator.

11. Reconnect the utility line to the transfer switch, reconnect the battery to the generator set (negative [–] battery cable last), reconnect the battery charger, and return the generator set to automatic standby.

TABLE 2. LEGACY INTERCONNECTIONS

LEGACY ANNUNCIATOR CONNECTIONS	DESCRIPTION	NEW ANNUNCIATOR CONNECTIONS
TB1-1 (12 VDC) TB1-2 (24 VDC)	BATT	TB1-16
TB1-3	GND	TB1-15
TB1-4	Genset Running	TB2-3
TB1-5	Normal Utility or Check Genset	TB1-8
TB1-6	Genset Supplying Load	TB1-4
TB1-7	Pre-Low Oil Pressure	TB2-11
TB1-8	Low Oil Pressure	TB2-12
TB1-9	Pre-High Engine Temp	TB2-9
TB1-10	High Engine Temp	TB2-10
TB1-11	Low Coolant Temp	TB2-8
TB1-12	Overspeed	TB2-13
TB1-13	Fail to Start	TB2-7
TB1-14	Not In Auto	TB2-2
TB1-15	Charger AC Failure	TB1-5
TB1-16	Low Fuel Level	TB1-7
TB1-17	Customer Fault 1	TB1-1
TB1-18	GND	TB2-1
TB1-19	GND	TB2-14
TB1-20	Silence Lamp Test (N.O.)	TB1-10
TB1-21	GND	TB1-9
TB1-22	Remote Alarm (N.O.)	TB1-13
TB1-23	GND	TB1-12
TB1-24	GND	TB1-17
TB2-1	High Battery Voltage or Customer Indication 1	TB2-4
TB2-2	Low Battery Voltage or Customer Indication 2	TB2-5
TB2-3	Normal Battery Voltage or Customer Indication 3 or Weak Battery	TB2-6
TB2-4	Low Coolant Level	TB1-6
TB2-5	Customer Fault 2	TB1-2
TB2-6	Customer Fault 3	TB1-3
TB2-7	Silence Lamp Test (N.C.)	TB1-11
TB2-8	Remote Alarm (N.C.)	TB1-14

TABLE 3. INSERT MODIFICATIONS

LAMP	INSERT CARD MODIFICATION
1	Customer Fault 1 text can be written in the blank space provided.
2	Customer Fault 2 text can be written in the blank space provided.
3	Customer Fault 3 text can be written in the blank space provided.
8	A “Normal Utility Power” sticky label can be placed over “Check Genset” or white tape can be used to cover “Check Genset” with “Normal Utility Power” written on the tape.
11	A blank sticky label or white tape can be used to cover “High Battery Voltage” and Custom Indication 1 text can be written on the label/tape.
12	A blank sticky label or white tape can be used to cover “Low Battery Voltage” and Custom Indication 2 text can be written on the label/tape.
13	A “Normal Battery Voltage” sticky label can be placed over “Weak Battery” or white tape can be used to cover “Weak Battery” with “Normal Battery Voltage” written on the tape.
Text for all other lamps should not need to be changed.	

Customer Options

OPTIONS

The annunciator with version 1.06 can only be configured via the three push buttons on the back of the annunciator.

The annunciator with version 2.00 or higher can be configured by:

1. Using the three push buttons on the back or the annunciator,
2. By PCCNet communications,

   or

   By Modbus communications.

When configuring via PCCNet or Modbus, the external device must have special code for performing this function.

Annunciator functions can be modified to meet the needs of your installation. individual status lamp colors (red, green, or amber), flash, and alarm characteristics can be changed. The S1 button on the control board (see Figure 6) can be used to enter the configuration mode and make adjustments.

Customer indications and customer faults can also be added.

The annunciator also has connections for Remote Silence/Lamp Test and Remote Alarm.

The following subsections describe how to modify and utilize optional features.

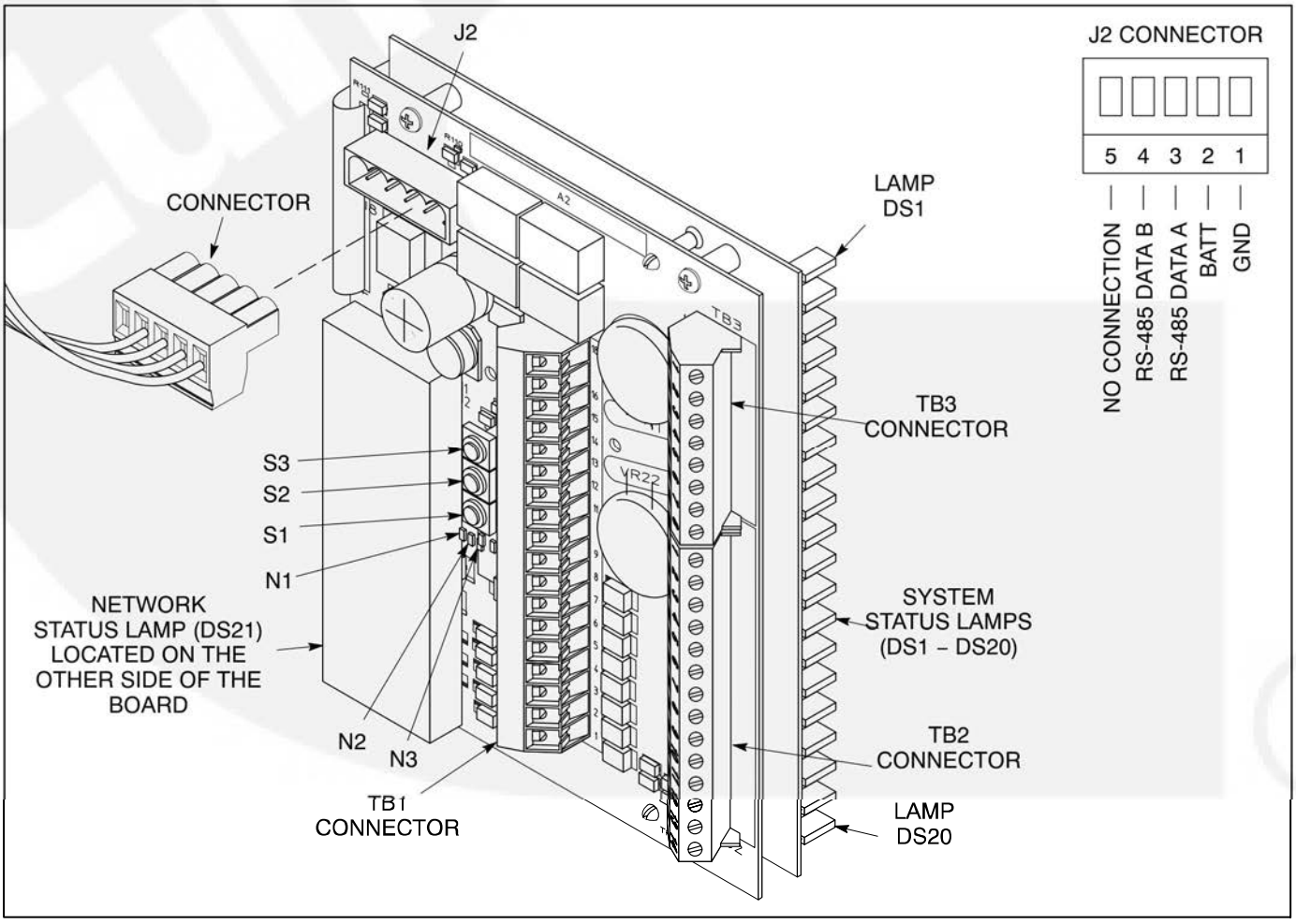

FIGURE 6. ANNUNCIATOR CONTROL BUTTONS, STATUS LAMPS, AND CONNECTORS

ANNUNCIATOR CONFIGURATION

During normal operation, the annunciator is in Running Mode. When in Running Mode, only the N3 LED is flashing (green). Configuration Mode must be entered to modify or check lamp characteristics and annunciator settings. When in Configuration Mode, the three LEDs on the back panel are used to display which configuration function is presently selected. One or more of the front panel system status lamps (DS1–DS20) are used to display the configurations available with each function.

Three momentary buttons on the back panel are used to set configurations:

- The S1 button is used to enter or leave Configuration Mode and to cycle through the configuration functions. While in Running Mode, the N1 LED will light if the S1 button is pressed.
- The S2 button is used in certain configuration functions to cycle through each of the 20 lamps. While in Running Mode, the N2 LED will light if the S2 button is pressed.
- The S3 button is used to select the available configurations. While in Running Mode, the N3 LED will light if the S3 button is pressed.

A summary of configuration settings is included in Table 7, located at the end of this section.

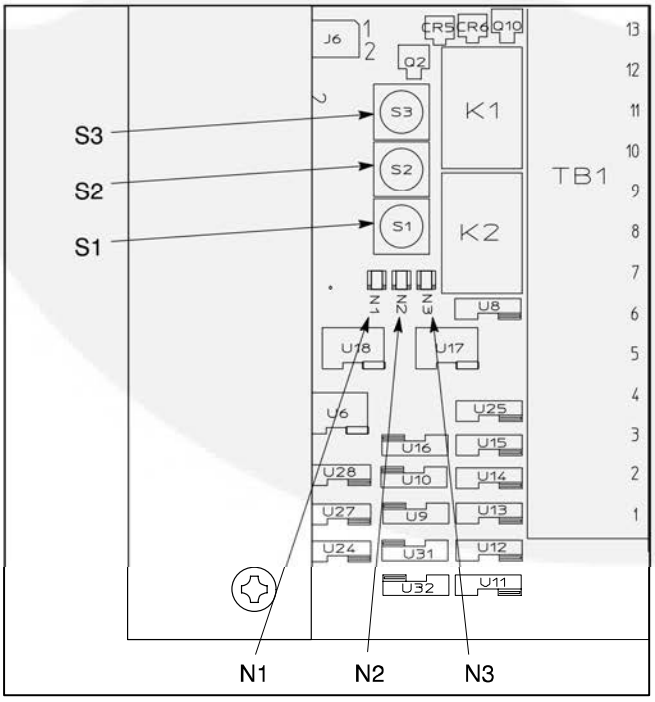

FIGURE 7. CONFIGURATION BUTTONS AND LEDs

Entering Configuration Mode

During normal operation (Running Mode), the green N3 LED flashes at one flash per second.

1. Press and hold S1 for 5 seconds to enter Configuration Mode.
2. During the five seconds that S1 is pressed, N1 lights and N3 continues to flash.
3. After S1 has been pressed for five seconds, N1, N2, and N3 go out. You have entered Configuration Mode when all three LEDs are off.

Configuration Functions

Upon entering Configuration Mode, eight configuration functions can be selected by pressing the S1 button. Table 4 shows the sequence of the functions that are available. The black-filled squares indicate which LEDs are lit for each function.

TABLE 4. CONFIGURATION FUNCTIONS

	FUNCTION	LED		
		N1	N2	N3
1	Select Predefined Configuration Table for all 20 lamps	□	□	□
2	Report Battery Voltage	■	□	□
3	Select Negative/Positive Input	□	■	□
4	Select Network Configuration Address	■	■	□
5	Configure individual Lamps with Color and Flash Characteristics	□	□	■
6	Configure individual Lamps with Audible Alert	■	□	■
7	Invert Active Signals	□	■	■
8	Enable Global Horn	■	■	■

Information on how to configure these functions is shown on the following pages. With each function, all configurations that are available are listed (including the default configuration). For most functions, a color is assigned to one or more lamps to indicate which configuration is currently selected.

NOTE: Active conditions are not displayed when in Configuration Mode. If a condition occurs while in Configuration Mode, it will not be displayed until after you have returned to Running Mode (see "Exiting Configuration Mode" on page 23).

Selecting Predefined Configuration Tables

LED		
N1	N2	N3
☐	☐	☐

Upon entering Configuration Mode, N1, N2, and N3 LEDs are all off, indicating that the Predefined Configuration Mode function has been selected. If a different configuration function is presently selected, repeatedly press the S1 button until all three LEDs are off.

Two sets of predefined lamp configurations are available ("Modbus and NFPA 110" for new annunciator installations and "Legacy NFPA 110" for replacement of legacy annunciators). The default settings for each of these configurations are shown in Table 5. If one of the two predefined configuration tables is selected, characteristics (color, flash, and audible alert) for all 20 discrete input lamps are automatically set. However, after selecting the table of attributes, characteristics of individual lamps can be modified (see page 22).

Selecting a predefined configuration table only needs to be done once. If you customize a predefined configuration table by changing default settings, always keep the configuration mode setting as "No Change." Otherwise, individual changes may be lost.

TABLE 5. DEFAULT LAMP CONFIGURATION TABLES

Lamp	Description	Modbus and NFPA 110 (DS1 = Red)			Legacy NFPA 110 (DS1 = Amber)		
		Color	Horn	Flash	Color	Horn	Flash
DS1	Customer Fault 1	Green	No	No	Red	Yes	No
DS2	Customer Fault 2	Amber	No	No	Red	Yes	No
DS3	Customer Fault 3	Red	No	No	Red	Yes	No
DS4	**Genset Supplying Load**	Amber	No	No	Green	No	No
DS5	**Charger AC Failure**	Amber	Yes	No	Red	No	No
DS6	**Low Coolant Level**	Amber	Yes	No	Red	Yes	No
DS7	**Low Fuel Level**	Red	Yes	No	Red	Yes	No
DS8	**Check Genset** (Modbus and NFPA 110) *or* Normal Utility (Legacy NFPA 110)	Amber	No	No	Green	No	No
DS9	**Not In Auto**	Red	Yes	Yes	Red	Yes	No
DS10	**Genset Running**	Amber	No	No	Green	No	No
DS11	**High Battery Voltage**	Amber	Yes	No	Red	No	No
DS12	**Low Battery Voltage**	Red	Yes	No	Red	No	No
DS13	**Weak Battery** (Modbus and NFPA 110) *or* Normal Battery Voltage (Legacy NFPA 110)	Red	Yes	No	Green	No	No
DS14	**Fail to Start**	Red	Yes	No	Red	Yes	No
DS15	**Low Coolant Temp**	Red	Yes	No	Red	Yes	No
DS16	**Pre-High Engine Temp**	Amber	Yes	No	Amber	Yes	No
DS17	**High Engine Temp**	Red	Yes	No	Red	Yes	No
DS18	**Pre-Low Oil Pressure**	Red	Yes	No	Amber	Yes	No
DS19	**Low Oil Pressure**	Red	Yes	No	Red	Yes	No
DS20	**Overspeed**	Red	Yes	No	Red	Yes	No

Bold type indicates the items that are printed on the annunciator overlay. The remaining slots are blank (see Figure 1).

For software versions **prior to version 2.00**, when you select the Predefined Configuration Mode function, lamp DS1 displays the color associated with the predefined configuration shown in the table below. To change the predefined configuration, press the S3 button to select the color assigned to one of the predefined configuration tables, as shown below.

DS1 COLOR	CONFIGURATION
Green	No Change (For customized configurations)
Amber	Legacy NFPA 110 (Default with software version 1.05 or earlier)*
Red	NFPA 110 (Default, starting with software version 1.06)*

* Starting with version 1.06, the factory defaults are set to the parameters in the NFPA 110 table. The factory defaults for earlier versions of software are set to the parameters in the Legacy NFPA 110 table.

If you have an unused, factory fresh annunciator, you can determine which table has been pre-selected by pressing the Silence/Lamp Test button when the annunciator is in Run mode (not Configuration mode). If the top three LEDs are Green, Amber, Red, then the NFPA 110 table has been preselected. If the top three LEDs are Red, Red, Red, then the Legacy NFPA 110 has been preselected. If a different pattern is displayed, the table doesn't match your needs, or if the annunciator has been used before, then select the predefined table that best matches your needs.

NOTE: When the predefined Legacy NFPA 110 table is selected, then "Report 12 Volt" battery voltage function is automatically selected. When the predefined NFPA 110 table is selected, then "Don't Report" battery reporting function is automatically selected. It may be necessary to change this setting for your installation. For more information on reporting battery voltage, see "Reporting Battery Voltage" below.

For software versions **starting with version 2.00**, when you select the Predefined Configuration Mode function, lamps DS1 and DS2 are used to display the color associated with the predefined configuration shown in the table below. To change the predefined configuration, press the S3 button to select the color assigned to one of the predefined configuration tables, as shown below.

If Modbus communications is desired, select the Modbus NFPA 110 table.

COLOR		CONFIGURATION
DS1	DS2	
Green	Off	No Change: PCCNet (For customized configurations)
Green	Green	No Change: Modbus (For customized configurations)
Amber	Off	PCCNet Legacy NFPA 110
Red	Off	PCCNet NFPA 110
Amber	Amber	Modbus NFPA 110

NOTE: When the predefined Legacy NFPA 110 table is selected, then "Report 12 Volt" battery voltage function is automatically selected. When the predefined NFPA 110 table is selected, then "Don't Report" battery reporting function is automatically selected. When the predefined Modbus table is selected, then "Don't Report" is automatically selected. It may be necessary to change this setting for your installation. For more information on reporting battery voltage, see "Reporting Battery Voltage" below.

Reporting Battery Voltage

LED		
N1	N2	N3
■	□	□

To check on or modify the status of the Reporting Battery Voltage function, enter the Configuration Mode and repeatedly press the S1 button until the N1 LED is lit. When the Reporting Battery Voltage function is selected, lamps DS11, DS12, and DS13 display the color indicating the status of this function.

NOTE: The Reporting Battery Voltage function is automatically selected when a Predefined Configuration Table is selected (see page 19).

A report high and low only configuration can be used when an input is available for Weak Battery, but no inputs are available for High Battery Voltage and Low Battery Voltage. A report high and low only configuration can also be used when it is desired to report a customer fault in place of Normal Battery.

To change the Reporting Battery Voltage function, press the S3 button until the color associated with the desired reporting configuration is displayed, as shown below.

COLOR			CONFIGURATION
DS11	DS12	DS13	
Green	Green	Green	Don't Report
Amber	Amber	Amber	Report – 12 Volt High/Low/Normal (Default)
Red	Red	Red	Report – 24 Volt High/Low/Normal
Amber	Amber	Off	Report – 12 Volt High/Low
Red	Red	Off	Report – 24 Volt High/Low

TABLE 6. BATTERY VOLTAGE SETTINGS

LOW	HIGH	CONFIGURATION
12 ± 0.5 VDC	16 ± 0.5 VDC	12 VDC
24 ± 1 VDC	32 ± 1 VDC	24 VDC

Selecting Negative/Positive Input

LED		
N1	N2	N3
□	■	□

The annunciator can be configured to be either a Positive or Negative signal device. The polarity of the annunciator must match that of the emergency power system.

To check on or modify the status of the Negative/Positive Input function, enter the Configuration Mode and repeatedly press the S1 button until only the N2 LED is lit. When the Negative/Positive Input function is selected, all 20 lamps are lit and are the same color (either red or green). Press the S3 button to modify the Negative/Positive Input function, as shown below.

DS1–20 COLOR	CONFIGURATION
Green	Positive Input
Red	Negative Input (Default)

Configuring the Network Configuration Address

LED		
N1	N2	N3
■	■	□

The annunciator can be configured to communicate using one of the four available network configuration addresses. This feature allows for up to four annunciators to be installed in a network, all displaying different network information.

To check on or modify the status of the Network Configuration Address function, enter the Configuration Mode and repeatedly press the S1 button until the N1 and N2 LEDs are lit. The first four lamps are used to indicate the address. Press the S3 button to modify the Network Configuration Address function, as shown below.

DS1	DS2	DS3	DS4	CONFIGURATION
Green	Off	Off	Off	Network Address 1 (Default)
Off	Green	Off	Off	Network Address 2
Off	Off	Green	Off	Network Address 3
Off	Off	Off	Green	Network Address 4

NOTE: Always use Network Configuration Address 1 (default) to set up NFPA 110 annunciators.

Configuring the Color and Flash Characteristics of individual Lamps

LED		
N1	N2	N3
□	□	■

Each of the 20 status lamps can be configured to be red, green, or amber. Each lamp can be configured to flash or not flash. Each lamp can also be disabled (turned off). Default lamp characteristics are determined by the predefined configuration table selected (see page 19).

To select the lamp configuration function after entering Configuration Mode, repeatedly press the S1 button until the N3 LED is lit.

When this function is selected, the characteristics of all 20 lamps are shown and the first lamp (DS1) flashes. To scroll through the other lamps, repeatedly press the S2 button until the desired lamp flashes a quick flash.

To modify the characteristics on an individual lamp, press the S3 button. The lamp characteristics are:

- Solid Green
- Solid Amber
- Solid Red
- One Second Flashing Green
- One Second Flashing Amber
- One Second Flashing Red
- Disabled (Off) – A lamp that is disabled cannot be configured with an audible alert.

NOTE: When a lamp is selected for flash configuration, a double flash can be observed. After selecting the next lamp, the lamp that was configured to flash will flash at a slower rate (once per second).

Configuring individual Lamps with An Audible Alert

LED		
N1	N2	N3
■	□	■

Each of the 20 status lamps can be configured with an Audible Alert that sounds when the associated LED becomes active.

NOTE: A lamp that is disabled cannot be configured with an audible alert.

To view and modify the status of the Audible Alert function of the lamps, enter the Configuration Mode and repeatedly press the S1 button until the N1 and N3 LEDs are lit.

When this function is selected, the alert status of all 20 lamps is shown and the first lamp (DS1) flashes. The default alert status is determined by the predefined configuration table selected (see page 19). To scroll through the lamps, repeatedly press the S2 button until the desired lamp flashes. Press the S3 button to modify the Audible Alert function, as shown below.

DS1–20 COLOR	CONFIGURATION
Green	Sound Disabled
Red	Sound Enabled

Inverting Active Hardware Signals

LED		
N1	N2	N3
□	■	■

The state of each of the 20 hardware input signals can optionally be individually inverted. If set to inverted, then an active hardware signal will be considered inactive and an inactive signal will be considered active.

After entering Configuration Mode, repeatedly press the S1 button until the N2 and N3 LEDs are lit.

When this function is selected, the characteristics of first lamp (DS1) are shown. To scroll through the other lamps, repeatedly press the S2 button until the desired lamp flashes. Press the S3 button to modify the Invert Active Signal function, as shown below.

DS1–20 COLOR	CONFIGURATION
Green	Don't Invert (Default)
Red	Invert

Enabling Global Horn

LED		
N1	N2	N3
■	■	■

Although individual lamps can be set up with an audible alert, the horn will not sound unless the Global Horn function is enabled. To check on or change the status of the Global Horn function, enter the Configuration Mode and repeatedly press the S1 button until the N1, N2, and N3 LEDs are lit.

When the Global Horn Enable function is selected, lamp DS1 displays the color indicating the status of this function. Press S3 to change the color associated with the global horn configuration, as shown below.

DS1 COLOR	CONFIGURATION
Green	Horn Disabled
Amber	Horn Enabled – Soft
Red	Horn Enabled – Loud (Default)

Exiting Configuration Mode

All changes are automatically saved upon exiting the configuration mode. To exit the configuration mode,

1. Press and hold S1 for 5 seconds.
2. After S1 has been pressed for five seconds, N3 begins to flash, indicating that you have returned to Running Mode.

NOTE: If you do not manually exit Configuration Mode, the annunciator automatically exits this mode after ten minutes of button inactivity. Any changes that were made are automatically saved.

CUSTOMER FAULTS

Three customer faults are available for annunciation of the customers specified conditions. Add the fault descriptions to the control panel insert. Refer to Table 5 for interconnect locations.

REMOTE SILENCE/LAMP TEST

Two remote Silence/Lamp Test connections are available (refer to Table 5). One Silence/Lamp Test has normally open contacts (connection TB1-10) and is used as both input and output for the Silence/Lamp Test function. The other Silence/Lamp Test has normally closed contacts (connection TB1-11) and can only be used as an output for the Silence/Lamp Test function. Both contacts are rated at two amps maximum.

REMOTE ALARM

Two remote alarm connections are available (refer to Table 5). One remote alarm has normally open contacts (connection TB1-13) and the other has normally closed contacts (connection TB1-14). Both contacts are rated at two amps maximum.

TABLE 7. CONFIGURATION SUMMARY TABLE

Function	Configuration LEDs (S1 Button) N1 N2 N3	Select individual Input (S2 Button)	Front Panel Lamp Selection (Lamps 1 Through 20) (S3 Button)	Value
Predefined Configuration Table (Software Versions Prior to Version 2.00)	– – –	NA	G – – – – – – – – – – – – – – – – – – –	No Change
			A – – – – – – – – – – – – – – – – – – –	Legacy
			R – – – – – – – – – – – – – – – – – – –	NFPA 110[1]
Predefined Configuration Table (Starting with Software Version 2.00)	– – –	NA	G – – – – – – – – – – – – – – – – – – –	No Change (PCCNet)
	– – –	NA	G G – – – – – – – – – – – – – – – – – –	No Change (Modbus)
	– – –	NA	A – – – – – – – – – – – – – – – – – – –	PCCNet Legacy
	– – –	NA	R – – – – – – – – – – – – – – – – – – –	PCCNet NFPA 110[1]
	– – –	NA	A A – – – – – – – – – – – – – – – – – –	Modbus NFPA 110
Report Battery Voltage (in Status Lamps 11, 12, and 13) – Used with PCCNet Network Only	G – –	NA	– – – – – – – – – – G G G – – – – – – –	Don't Report [134]
			– – – – – – – – – – A A A – – – – – – –	Report 12V[2]
			– – – – – – – – – – R R R – – – – – – –	Report 24V
			– – – – – – – – – – A A – – – – – – – –	Report 12V High/Low
			– – – – – – – – – – R R – – – – – – – –	Report 24V High/Low
Negative/ Positive Input Selection	– G –	NA	G G G G G G G G G G G G G G G G G G G G	Positive
			R R R R R R R R R R R R R R R R R R R R	Negative[1]
Network Configuration Address	G G –	NA	G – – – – – – – – – – – – – – – – – – –	1 (NFPA 110)[1234]
			– G – – – – – – – – – – – – – – – – – –	2
			– – G – – – – – – – – – – – – – – – – –	3
			– – – G – – – – – – – – – – – – – – – –	4
Color and Flash for individual Lamps	– – G	Press S2 to cycle through the 20 lamps	G	Solid Green
			A	Solid Amber
			R	Solid Red
			>G<	Flashing Green
			>A<	Flashing Amber
			>R<	Flashing Red
			–	Disabled
Audible Alert with individual Lamps	G – G	Press S2 to cycle through the 20 lamps	G	Disabled
			R	Enabled
Invert Active Signal for individual Inputs	– G G	Press S2 to cycle through the 20 lamps	G	Don't Invert[1]
			R	Invert
Global Horn Enable	G G G	NA	G – – – – – – – – – – – – – – – – – – –	Disabled
			A – – – – – – – – – – – – – – – – – – –	Enabled–Soft
			R – – – – – – – – – – – – – – – – – – –	Enabled–Loud[1]

Notes:

G = Green, A = Amber, R = Red, – = Off

[1] = Factory Default (Legacy was the default in early version of software. NFPA 110 is the default, starting with version 1.06.)

[2] = Default when Predefined Configuration Table = PCCNet Legacy

[3] = Default when Predefined Configuration Table = PCCNet NFPA 110.

[4] = Default when Predefined Configuration Table = Modbus NFPA 110.

THIS PAGE INTENTIONALLY LEFT BLANK

Troubleshooting

WARNING ***Faulty service of the equipment monitored by the annunciator can lead to severe injury or death from electrocution, and equipment or property damage due to fire. Service must be performed by trained and experienced personnel.***

PRE-CHECK

Verify the proper power supply wiring connection is made and that the power supply voltage range is correct for your installation.

- The power supply wiring connection for a **new annunciator installation** must be between TB1-16 (BATT) and TB1-15 (GND).
- The power supply wiring connection for a **legacy annunciator replacement** that was between TB1-2 and TB1-3 (GND) for a 12-volt system or between TB1-1 and TB1-3 (GND) for a 24-volt system must now be between TB1-16 (BATT) and TB1-15 (GND).
- The power supply voltage range must between 6.5 and 31 VDC.

Verify that the annunciator is correctly set up to be either a positive or negative signal device. To check the negative/positive input status, remove the annunciator panel from the control box and use the configuration buttons to enter Configuration Mode and check on the negative/positive input status (see pages 18 and 22).

TROUBLESHOOTING

Incorrect Battery Voltage Sensing

If incorrect or no battery voltage indication appears, perform the following checks.

1. For a **new annunciator installation**, verify that B+ is connected to TB1-16 and that the ground (GND) connection is made to TB1-15.
2. For a **legacy annunciator replacement**, verify that B+ is no longer connected to TB1-2 on a 12-volt system or connected to TB1-1 on a 24-volt system and that the ground (GND) connection is not made to TB1-3. B+ must be connected to TB1-16 and the ground (GND) connection must be made to TB1-15.
3. Verify that the annunciator is configured to report battery voltage.
4. Verify that the annunciator has power by pressing the Silence/Lamp Test pushbutton. All 21 lamps should light.
5. Use a voltmeter to check the voltage between the "BATT IN" and a GND terminal to verify that it is correct.
6. If the failure still exists, the PCB is defective and must be replaced.

Lamp Testing

All test lamps should light when the Silence/Lamp Test button is pressed. The following describes the sequence of events that should occur if you press and hold the Silence/Lamp Test button.

1. If there are no active audible alarms, all lamps (DS1 thru DS21) switch from green to amber to red.
2. Lamps DS1 thru DS20 display their configured color, flash, and audible alert characteristics.
3. After releasing the Silence/Lamp Test button, the status of the lamps that are hard-wired is displayed for one second.

All Indicators Fail to Light

If the indicators fail to light when the Silence/Lamp Test button is pressed, then perform the following checks.

1. Verify that the annunciator has power between TB1-16 (+) and TB1-15 (GND).
2. Verify that the J1 connector (membrane panel ribbon cable to PCB assembly – located on the back of the board) is secure (see Figure 8). Press the Silence/Lamp Test pad.
3. If the problem continues, momentarily jumper the J1 pins together. If all the indicators light when J1 pins are jumpered together, the membrane touch panel is defective and must be replaced.
4. If the failure still exists, the PCB is defective and must be replaced.

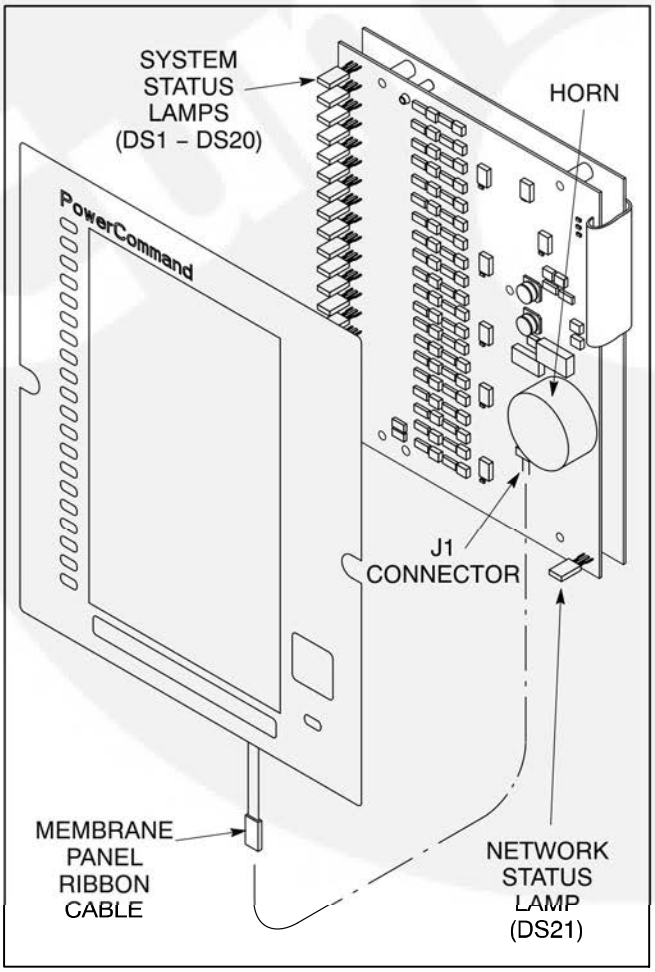

FIGURE 8. J1 CONNECTION

One or More Failed Lamps

If one or more lamps fail to light when the Silence/Lamp Test button is pressed, the lamp(s) and/or PCB is/are defective. If any defective lamp is used, replace the PCB.

Input Fails to Light Lamp

If a status lamp fails to light when the corresponding input condition is activated, but the lamp does light during a lamp test, then verify the input connections.

1. Enter Configuration Mode and verify that the lamp has been enabled (see "Annunciator Configuration" on page 18).
2. Apply B+ to the respective input and verify that the lamp fails to light.
3. Apply GND to the respective input and verify that the lamp fails to light.
4. If the lamp lights with the proper input, check for a poor connection or defective lead back to the signal source.
5. If the status lamp still does not light, the lamp and/or PCB is defective. Replace the PCB if the lamp is used.

Not All Lamps Display the Desired Characteristics

If one or more lamps do not display the desired characteristics when the Silence/Lamp Test button is pressed and held (see "Lamp Testing on the previous page), perform the following checks.

1. Enter Configuration Mode and verify that the desired individual lamp characteristics have been set (see page 23).
2. While in Configuration Mode, verify that the Invert Active Signals function is correctly set (see page 23).

Lamps Are Lit At the Wrong Time

If most or all lamps are lit during normal operation but you do not want them to be lit, perform the following checks.

1. Enter Configuration Mode and verify that the correct negative/positive input setting has been made (see page 23).

2. While in Configuration Mode, verify that the Invert Active Signals function is correctly set (see page 23).

Excessive Battery Voltage Indications

If there are numerous indications of High Battery Voltage or Low Battery Voltage, perform the following checks.

1. Enter Configuration Mode and verify that the correct Reporting Battery Voltage configuration has been made (see page 23). The configuration must be properly set for a 12 or 24 VDC control system.

2. Check the battery and/or battery charger for proper voltage/operation.

Alarm Failure

If a fault fails to signal an audible alarm, but does light the lamp, perform the following checks.

NOTE: If both the alarm and lamp fail to function, perform the checks under "Input Fails to Light Lamp."

1. Enter Configuration Mode and verify that the Global Horn function has been enabled (see "Enabling Global Horn" on page 23). If Global Horn is disabled, lamp DS1 will be green.

2. While in Configuration Mode, verify that the lamp has been configured with an audible alert. (see "Configuring individual Lamps with an Audible Alert" on page 23). If the alert for the lamp is disabled, it will be green.

3. Verify that during the fault input condition, the remote alarm (N.O.) output (TB1-13 for new annunciator installations or TB1-22 for legacy annunciator replacement installations) becomes grounded.

4. If steps one through three do not indicate any problems, tap on the side of the horn a few times. This action may free the piezo element and allow it to vibrate. Sometimes after extreme temperature changes, the piezo element becomes jammed and is unable to vibrate.

5. If the alarm still fails to sound, the PCB is defective and must be replaced.

The Alarm Sounds But No Lamps are Flashing

Check to see if a lamp is displaying a quick blip (0.2 seconds On and 1.8 seconds Off). If a lamp is configured as inaudible (horn off), the event occurs, and then it becomes inactive before the Silence/Lamp Test pushbutton is pressed, the alarm will sound but the lamp will not continue to flash its configured color and flash characteristics.

Remote/Silence Lamp Test Connection

If the local annunciator fails to silence the alarm horns of the remote interconnected annunciators, then verify that the Silence/Lamp Test (N.O.) terminals (TB1-10 for new annunciator installations or TB1-20 for legacy annunciator replacement installations) are interconnected. The connections are made to TB1-10 on the new annunciators.

Genset Fault Fails to Go Inactive

If an annunciator fault status remains active but you believe it should be inactive, it may be that the genset controller is actually keeping the fault active. Some genset controllers (PCC2100, PCC3200) keep some faults active (High Engine Temperature, Low Oil Pressure) until the genset shuts down, restarts, and then runs without the fault condition in the fault range for a predetermined amount of time. Refer to the controller's fault status list to see if the fault is still active. Some controllers display an asterisk (*), indicating that the fault is still active. Refer to your genset or controller manual for more information.

THIS PAGE INTENTIONALLY LEFT BLANK

Parts Information

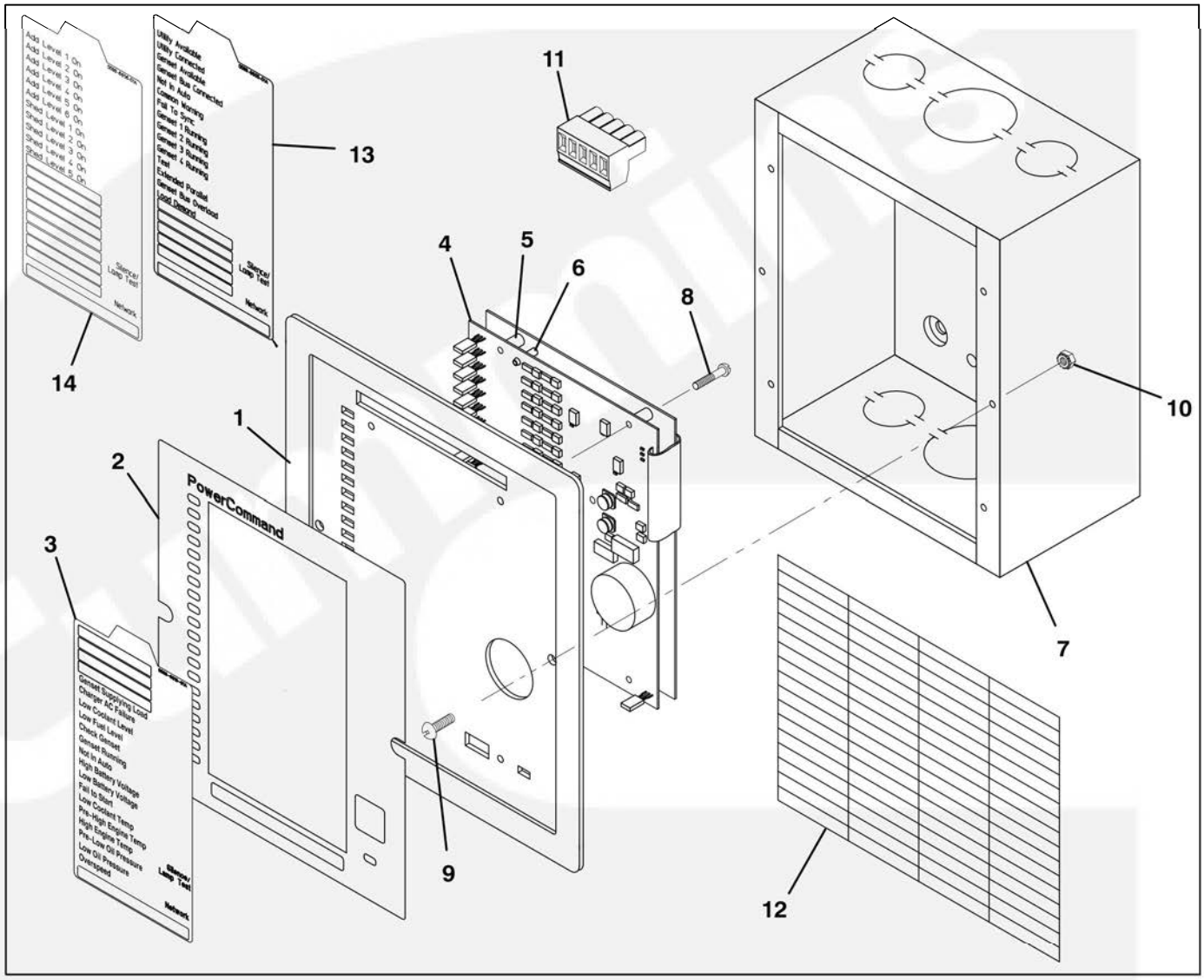

FIGURE 9. ANNUNCIATOR PARTS

REF NO.	PART NO.	QTY USED	PART DESCRIPTION
			Annunciator
	300–5929–01	1	Panel Mounted
	300–5929–02	1	Panel with Enclosure
1	319–4148–02	1	Panel, Annunciator
2	300–5338	1	Panel, Membrane
3			Card, Insert – Membrane
	098–8321–01	1	English
	098–8321–02	1	Spanish
	098–8321–03	1	French
	098–8321–04	1	Chinese
4	327–1521	1	Board, Printed Circuit (PCB) – Annunciator
5	332–4064	4	Spacer
6	332–3332–04	3	Post, Circuit Board
7	301–3090	1	Control Box (Used with 300–5929–02 Annunciator)
8	819–1160–01	3	Screw, Machine – Round Head (M3 x 10mm)
9	815–0385	2	Screw, Machine – Round Head (6–32 x 1/2") (Black)
10	870–0183	2	Nut, Hex – Lock (6–32)
11	323–2192–04	1	Connector

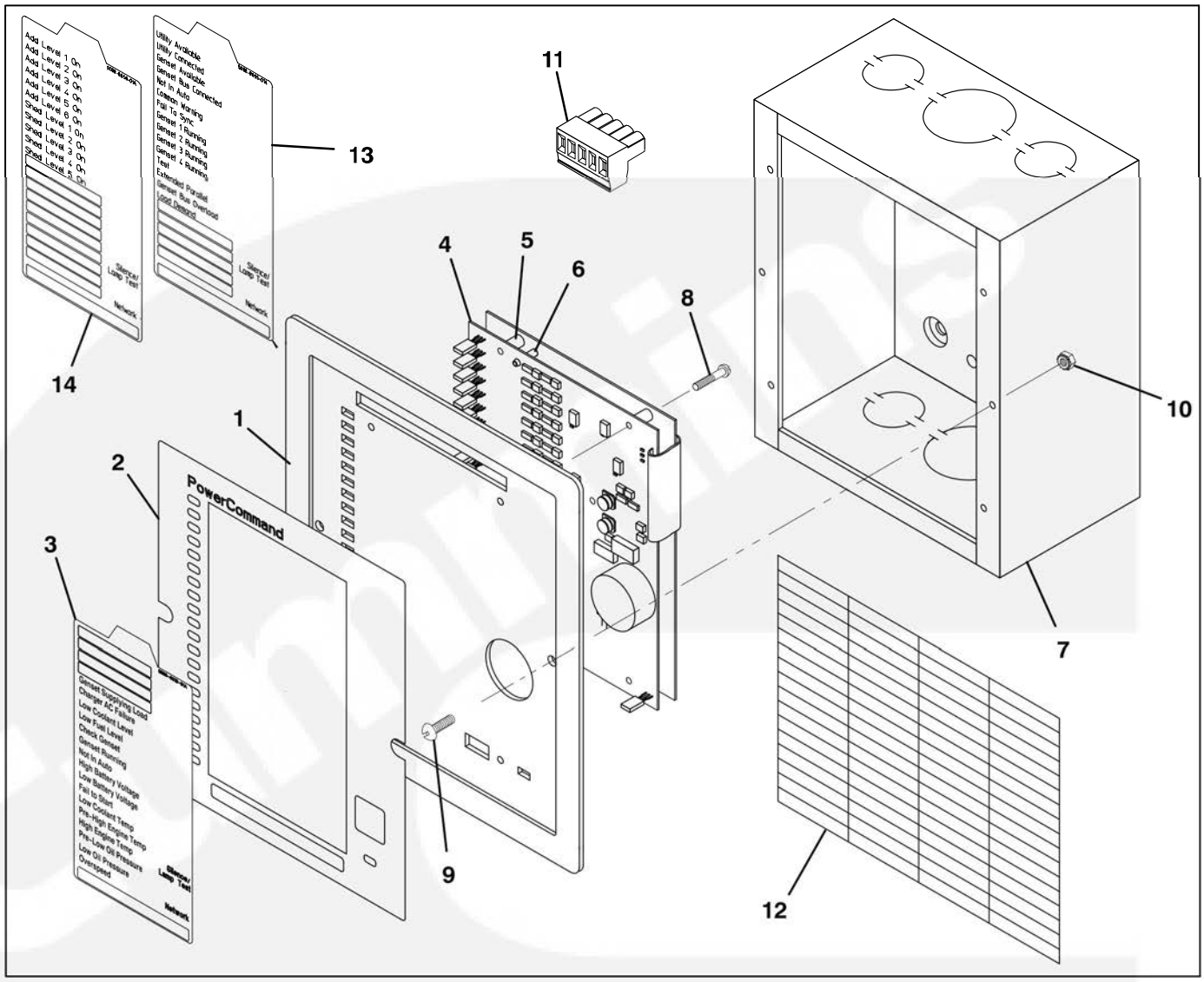

FIGURE 9. ANNUNCIATOR PARTS

REF NO.	PART NO.	QTY USED	PART DESCRIPTION
12			Label, Peel Off
	098–6902	1	English
	098–6902–01	1	Spanish
13			Card, Insert – Membrane
	098–8855–01	1	English
	098–8855–02	1	Spanish
	098–8855–03	1	French
	098–8855–04	1	Chinese
14			Card, Insert – Membrane
	098–8856–01	1	English
	098–8856–02	1	Spanish
	098–8856–03	1	French
	098–8856–04	1	Chinese

Modbus Register Table

Modbus Address	System Name	Access	Specifications		Description
43000	High 4 LEDs	Read/Write	bit 0: Input 1(LSB) bit 1: Input 2 bit 2: Input 3 bit 3: Input 4	Default: 0	Read this register for the statuses of LEDs 1..4. Write to this register to control the status of the LEDs.
43001	Low 16 LEDs	Read/Write	bit 0: Input 5(LSB) bit 1: Input 6 bit 2: Input 7 bit 3: Input 8 .. bit 14: Input 19 bit 15: Input 20(MSB)	Default: 0	Read this register for the statuses of LEDs 5..20. Write to this register to control the status of the LEDs.
43002	High 4 Discrete Inputs	Read Only	bit 0: Input 1(LSB) bit 1: Input 2 bit 2: Input 3 bit 3: Input 4	Default: n/a	Read this register for the statuses of discrete inputs 1..4.
43003	Low 16 Discrete Inputs	Read Only	bit 0: Input 5(LSB) bit 1: Input 6 bit 2: Input 7 bit 3: Input 8 .. bit 14: Input 19 bit 15: Input 20(MSB)	Default: n/a	Read this register for the statuses of discrete inputs 5..20.
43004	High Battery Status	Read Only	0: OK 1: Too High	Default: n/a	Annunciator generated high battery voltage status. To use this status the Report Battery Voltage register must not be set to Don't Report.
43005	Low Battery Status	Read Only	0: Ok 1: Too Low	Default: n/a	Annunciator generated low battery voltage status. To use this status the Report Battery Voltage register must not be set to Don't Report.
43006	Audible Alarm Status	Read Only	0: Inactive 1: Active	Default: n/a	Read current state of audible alarm.
43007	Silence Button	Read/Write	0: Not Pressed 1: Pressed	Default: Not Pressed	Silence Button has been pressed since the last time this register was read.
43008	Relay 1 State	Read/Write	0: Inactive 1: Active	Default: Inactive	Read current state of relay or write desired state.
43009	Relay 2 State	Read/Write	0: Inactive 1: Active	Default: Inactive	Read current state of relay or write desired state.
43010	Relay 3 State	Read/Write	0: Inactive 1: Active	Default: Inactive	Read current state of relay or write desired state.
43011	Relay 4 State	Read/Write	0: Inactive 1: Active	Default: Inactive	Read current state of relay or write desired state.
43021	Configure LED 1	Read/Write	See Modbus LED Configuration Structure	Default: See Modbus NFPA 110 Table	Set-up Individual LED.

Modbus Address	System Name	Access	Specifications		Description
43022	Configure LED 2	Read/Write	See Modbus LED Configuration Structure	Default: See Modbus NFPA 110 Table	Set-up Individual LED.
43023	Configure LED 3	Read/Write	See Modbus LED Configuration Structure	Default: See Modbus NFPA 110 Table	Set-up Individual LED.
43024	Configure LED 4	Read/Write	See Modbus LED Configuration Structure	Default: See Modbus NFPA 110 Table	Set-up Individual LED.
43025	Configure LED 5	Read/Write	See Modbus LED Configuration Structure	Default: See Modbus NFPA 110 Table	Set-up Individual LED.
43026	Configure LED 6	Read/Write	See Modbus LED Configuration Structure	Default: See Modbus NFPA 110 Table	Set-up Individual LED.
43027	Configure LED 7	Read/Write	See Modbus LED Configuration Structure	Default: See Modbus NFPA 110 Table	Set-up Individual LED.
43028	Configure LED 8	Read/Write	See Modbus LED Configuration Structure	Default: See Modbus NFPA 110 Table	Set-up Individual LED.
43029	Configure LED 9	Read/Write	See Modbus LED Configuration Structure	Default: See Modbus NFPA 110 Table	Set-up Individual LED.
43030	Configure LED 10	Read/Write	See Modbus LED Configuration Structure	Default: See Modbus NFPA 110 Table	Set-up Individual LED.
43031	Configure LED 11	Read/Write	See Modbus LED Configuration Structure	Default: See Modbus NFPA 110 Table	Set-up Individual LED.
43032	Configure LED 12	Read/Write	See Modbus LED Configuration Structure	Default: See Modbus NFPA 110 Table	Set-up Individual LED.
43033	Configure LED 13	Read/Write	See Modbus LED Configuration Structure	Default: See Modbus NFPA 110 Table	Set-up Individual LED.
43034	Configure LED 14	Read/Write	See Modbus LED Configuration Structure	Default: See Modbus NFPA 110 Table	Set-up Individual LED.
43035	Configure LED 15	Read/Write	See Modbus LED Configuration Structure	Default: See Modbus NFPA 110 Table	Set-up Individual LED.

Modbus Address	System Name	Access	Specifications		Description
43036	Configure LED 16	Read/Write	See Modbus LED Configuration Structure	Default: See Modbus NFPA 110 Table	Set-up Individual LED.
43037	Configure LED 17	Read/Write	See Modbus LED Configuration Structure	Default: See Modbus NFPA 110 Table	Set-up Individual LED.
43038	Configure LED 18	Read/Write	See Modbus LED Configuration Structure	Default: See Modbus NFPA 110 Table	Set-up Individual LED.
43039	Configure LED 19	Read/Write	See Modbus LED Configuration Structure	Default: See Modbus NFPA 110 Table	Set-up Individual LED.
43040	Configure LED 20	Read/Write	See Modbus LED Configuration Structure	Default: See Modbus NFPA 110 Table	Set-up Individual LED.
43041	Report Battery Voltage	Read/Write	0: Don't Report 1: 12 volt Hi/Low/Normal 2: 24 volt Hi/Low/Normal 3: 12 volt Hi/Low 4: 24 volt Hi/Low	Default: Don't Report	Specifies if annunciator generated voltage statuses should be displayed on the annunciator.
43042	Neg/Pos Input Select	Read/Write	0: Negative 1: positive	Default: Negative	Specifies whether the annunciator discrete inputs accepts negative signals or positive signals.
43043	Global Horn Enable	Read/Write	0: Disabled 1: Enabled – Soft 2: Enabled – Load	Default: Enabled – Load	Overall control of the audible alarm.
43044	Network Configuration Address	Read/Write	1: Modbus Address 1 2: Modbus Address 2 3: Modbus Address 3 4: Modbus Address 4	Default: Modbus Address 1	If you change the address then you will not be able to communicate with the annunciator until the Modbus Master also changes its sending address.
43045	Modbus Baud Rate	Read/Write	0: 2400 Baud 1 :4800 Baud 2 :9600 Baud 3 :19200 Baud	Default: 19200	If you change baud rates then you will not be able to communicate with the annunciator until the Modbus Master also changes its baud rate.
43046	Modbus Parity	Read/Write	0: Even 1 :Odd 2 :None	Default: Even	If you change parity then you will not be able to communicate with the annunciator until the Modbus Master also changes its parity.
43047	Save Trims	Read/Write	0: Do Nothing 1: Save Trims	Do Nothing	Use to save adjustments to non-volatile memory. Perform Save Trims after all configurations have been updated.

THIS PAGE INTENTIONALLY LEFT BLANK

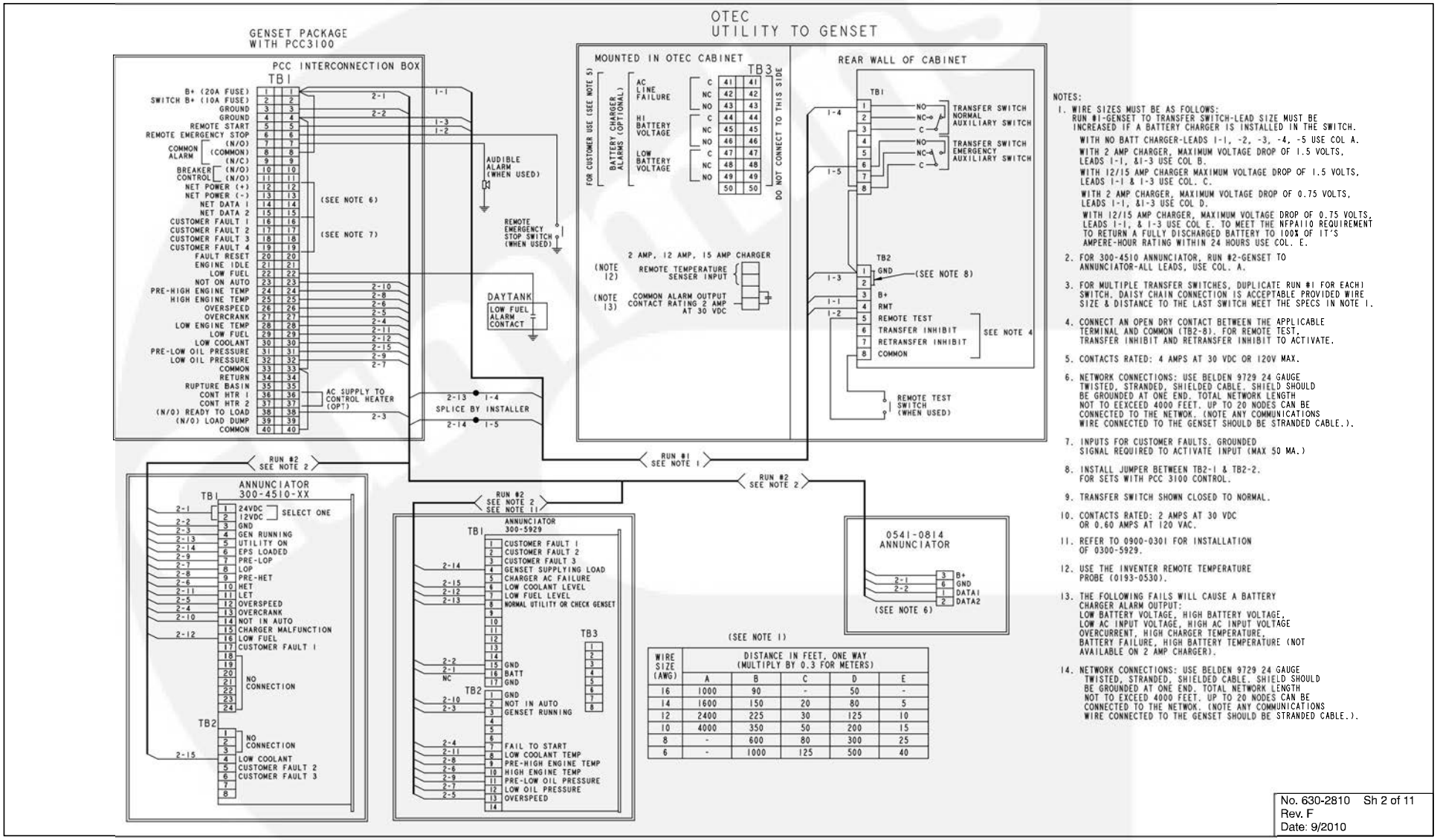

(SEE NOTE 1)

WIRE SIZE (AWG)	DISTANCE IN FEET, ONE WAY (MULTIPLY BY 0.3 FOR METERS)				
	A	B	C	D	E
16	1000	90	-	50	-
14	1600	150	20	80	5
12	2400	225	30	125	10
10	4000	350	50	200	15
8	-	600	80	300	25
6	-	1000	125	500	40

NOTES:

1. WIRE SIZES MUST BE AS FOLLOWS:
   RUN #1-GENSET TO TRANSFER SWITCH-LEAD SIZE MUST BE INCREASED IF A BATTERY CHARGER IS INSTALLED IN THE SWITCH.
   WITH NO BATT CHARGER-LEADS 1-1, -2, -3, -4, -5 USE COL A.
   WITH 2 AMP CHARGER, MAXIMUM VOLTAGE DROP OF 1.5 VOLTS, LEADS 1-1, &1-3 USE COL B.
   WITH 12/15 AMP CHARGER MAXIMUM VOLTAGE DROP OF 1.5 VOLTS, LEADS 1-1 & 1-3 USE COL. C.
   WITH 2 AMP CHARGER, MAXIMUM VOLTAGE DROP OF 0.75 VOLTS, LEADS 1-1, &1-3 USE COL D.
   WITH 12/15 AMP CHARGER, MAXIMUM VOLTAGE DROP OF 0.75 VOLTS, LEADS 1-1, & 1-3 USE COL E. TO MEET THE NFPA110 REQUIREMENT TO RETURN A FULLY DISCHARGED BATTERY TO 100% OF IT'S AMPERE-HOUR RATING WITHIN 24 HOURS USE COL. E.
2. FOR 300-4510 ANNUNCIATOR, RUN #2-GENSET TO ANNUNCIATOR-ALL LEADS, USE COL. A.
3. FOR MULTIPLE TRANSFER SWITCHES, DUPLICATE RUN #1 FOR EACH SWITCH, DAISY CHAIN CONNECTION IS ACCEPTABLE PROVIDED WIRE SIZE & DISTANCE TO THE LAST SWITCH MEET THE SPECS IN NOTE 1.
4. CONNECT AN OPEN DRY CONTACT BETWEEN THE APPLICABLE TERMINAL AND COMMON (TB2-8). FOR REMOTE TEST, TRANSFER INHIBIT AND RETRANSFER INHIBIT TO ACTIVATE.
5. CONTACTS RATED: 4 AMPS AT 30 VDC OR 120V MAX.
6. NETWORK CONNECTIONS: USE BELDEN 9729 24 GAUGE TWISTED, STRANDED, SHIELDED CABLE. SHIELD SHOULD BE GROUNDED AT ONE END. TOTAL NETWORK LENGTH NOT TO EEXCEED 4000 FEET. UP TO 20 NODES CAN BE CONNECTED TO THE NETWOK. (NOTE ANY COMMUNICATIONS WIRE CONNECTED TO THE GENSET SHOULD BE STRANDED CABLE.).
7. INPUTS FOR CUSTOMER FAULTS. GROUNDED SIGNAL REQUIRED TO ACTIVATE INPUT (MAX 50 MA.)
8. INSTALL JUMPER BETWEEN TB2-1 & TB2-2. FOR SETS WITH PCC 3100 CONTROL.
9. TRANSFER SWITCH SHOWN CLOSED TO NORMAL.
10. CONTACTS RATED: 2 AMPS AT 30 VDC OR 0.60 AMPS AT 120 VAC.
11. REFER TO 0900-0301 FOR INSTALLATION OF 0300-5929.
12. USE THE INVENTER REMOTE TEMPERATURE PROBE (0193-0530).
13. THE FOLLOWING FAILS WILL CAUSE A BATTERY CHARGER ALARM OUTPUT:
    LOW BATTERY VOLTAGE, HIGH BATTERY VOLTAGE, LOW AC INPUT VOLTAGE, HIGH AC INPUT VOLTAGE OVERCURRENT, HIGH CHARGER TEMPERATURE, BATTERY FAILURE, HIGH BATTERY TEMPERATURE (NOT AVAILABLE ON 2 AMP CHARGER).
14. NETWORK CONNECTIONS: USE BELDEN 9729 24 GAUGE TWISTED, STRANDED, SHIELDED CABLE. SHIELD SHOULD BE GROUNDED AT ONE END. TOTAL NETWORK LENGTH NOT TO EXCEED 4000 FEET. UP TO 20 NODES CAN BE CONNECTED TO THE NETWOK. (NOTE ANY COMMUNICATIONS WIRE CONNECTED TO THE GENSET SHOULD BE STRANDED CABLE.).

No. 630-2810 Sh 2 of 11
Rev. F
Date: 9/2010

FIGURE 10. TYPICAL INTERCONNECTION WIRING DIAGRAM (WITH PCC3100)

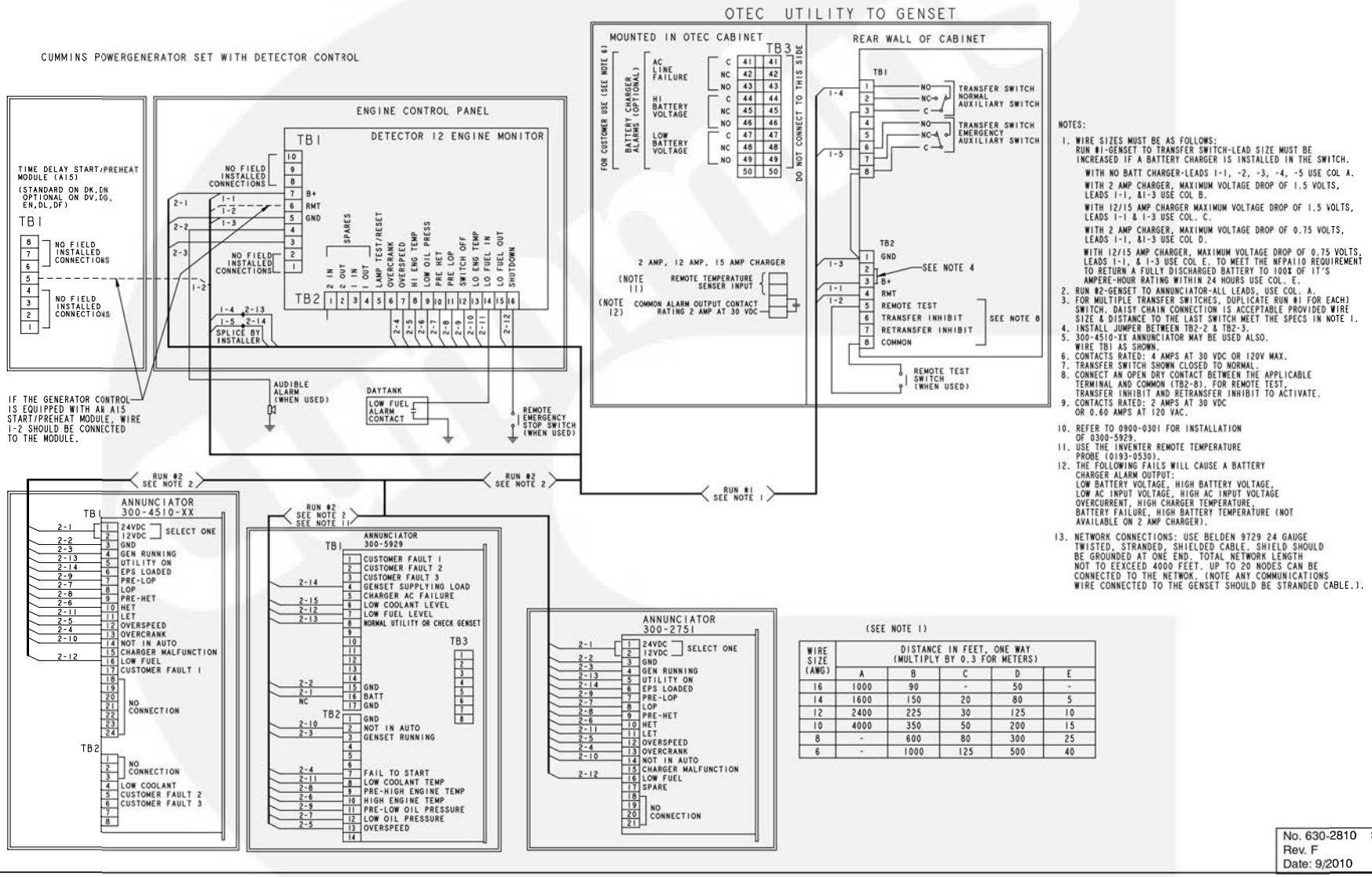

NOTES:

1. WIRE SIZES MUST BE AS FOLLOWS:
   RUN #1-GENSET TO TRANSFER SWITCH-LEAD SIZE MUST BE INCREASED IF A BATTERY CHARGER IS INSTALLED IN THE SWITCH.
   WITH NO BATT CHARGER-LEADS 1-1, -2, -3, -4, -5 USE COL A.
   WITH 2 AMP CHARGER, MAXIMUM VOLTAGE DROP OF 1.5 VOLTS, LEADS 1-1, &1-3 USE COL B.
   WITH 12/15 AMP CHARGER MAXIMUM VOLTAGE DROP OF 1.5 VOLTS, LEADS 1-1 & 1-3 USE COL. C.
   WITH 2 AMP CHARGER, MAXIMUM VOLTAGE DROP OF 0.75 VOLTS, LEADS 1-1, &1-3 USE COL D.
   WITH 12/15 AMP CHARGER, MAXIMUM VOLTAGE DROP OF 0.75 VOLTS, LEADS 1-1, & 1-3 USE COL E. TO MEET THE NFPA110 REQUIREMENT TO RETURN A FULLY DISCHARGED BATTERY TO 100% OF IT'S AMPERE-HOUR RATING WITHIN 24 HOURS USE COL. E.
2. RUN #2-GENSET TO ANNUNCIATOR-ALL LEADS, USE COL. A.
3. FOR MULTIPLE TRANSFER SWITCHES, DUPLICATE RUN #1 FOR EACH) SWITCH. DAISY CHAIN CONNECTION IS ACCEPTABLE PROVIDED WIRE SIZE & DISTANCE TO THE LAST SWITCH MEET THE SPECS IN NOTE 1.
4. INSTALL JUMPER BETWEEN TB2-2 & TB2-3.
5. 300-4510-XX ANNUNCIATOR MAY BE USED ALSO. WIRE TB1 AS SHOWN.
6. CONTACTS RATED: 4 AMPS AT 30 VDC OR 120V MAX.
7. TRANSFER SWITCH SHOWN CLOSED TO NORMAL.
8. CONNECT AN OPEN DRY CONTACT BETWEEN THE APPLICABLE TERMINAL AND COMMON (TB2-8). FOR REMOTE TEST, TRANSFER INHIBIT AND RETRANSFER INHIBIT TO ACTIVATE.
9. CONTACTS RATED: 2 AMPS AT 30 VDC OR 0.60 AMPS AT 120 VAC.
10. REFER TO 0900-0301 FOR INSTALLATION OF 0300-5929.
11. USE THE INVENTER REMOTE TEMPERATURE PROBE (0193-0530).
12. THE FOLLOWING FAILS WILL CAUSE A BATTERY CHARGER ALARM OUTPUT:
    LOW BATTERY VOLTAGE, HIGH BATTERY VOLTAGE, LOW AC INPUT VOLTAGE, HIGH AC INPUT VOLTAGE OVERCURRENT, HIGH CHARGER TEMPERATURE, BATTERY FAILURE, HIGH BATTERY TEMPERATURE (NOT AVAILABLE ON 2 AMP CHARGER).
13. NETWORK CONNECTIONS: USE BELDEN 9729 24 GAUGE TWISTED, STRANDED, SHIELDED CABLE. SHIELD SHOULD BE GROUNDED AT ONE END. TOTAL NETWORK LENGTH NOT TO EEXCEED 4000 FEET. UP TO 20 NODES CAN BE CONNECTED TO THE NETWOK. (NOTE ANY COMMUNICATIONS WIRE CONNECTED TO THE GENSET SHOULD BE STRANDED CABLE.).

(SEE NOTE 1)

WIRE SIZE (AWG)	DISTANCE IN FEET, ONE WAY (MULTIPLY BY 0.3 FOR METERS)				
	A	B	C	D	E
16	1000	90	-	50	-
14	1600	150	20	80	5
12	2400	225	30	125	10
10	4000	350	50	200	15
8	-	600	80	300	25
6	-	1000	125	500	40

No. 630-2810 Sh 3 of 11
Rev. F
Date: 9/2010

FIGURE 11. TYPICAL INTERCONNECTION WIRING DIAGRAM (WITH DETECTOR CONTROL)

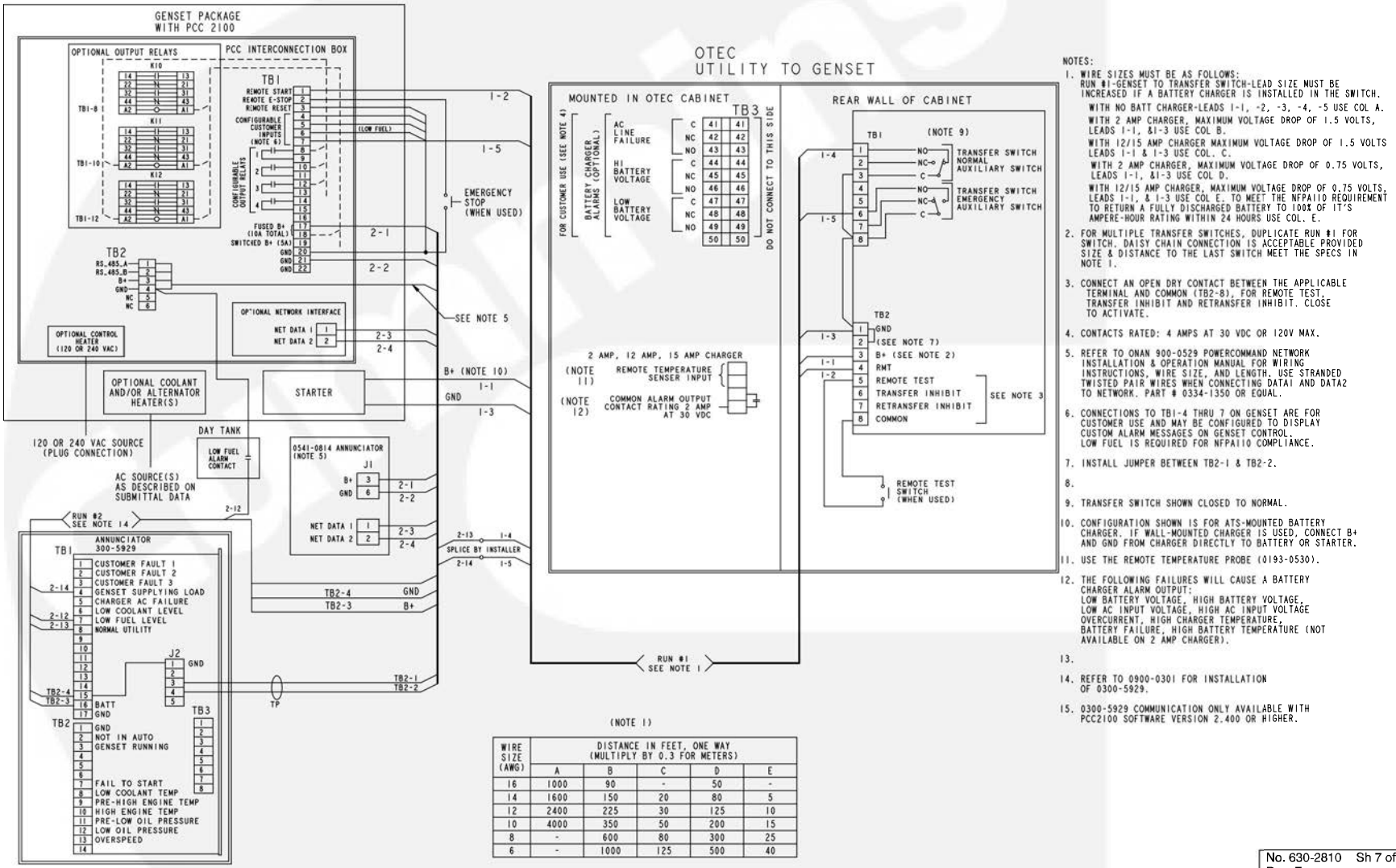

NOTES:

1. WIRE SIZES MUST BE AS FOLLOWS:
   RUN #1-GENSET TO TRANSFER SWITCH-LEAD SIZE MUST BE INCREASED IF A BATTERY CHARGER IS INSTALLED IN THE SWITCH.
   WITH NO BATT CHARGER-LEADS 1-1, -2, -3, -4, -5 USE COL A.
   WITH 2 AMP CHARGER, MAXIMUM VOLTAGE DROP OF 1.5 VOLTS, LEADS 1-1, &1-3 USE COL B.
   WITH 12/15 AMP CHARGER MAXIMUM VOLTAGE DROP OF 1.5 VOLTS LEADS 1-1 & 1-3 USE COL. C.
   WITH 2 AMP CHARGER, MAXIMUM VOLTAGE DROP OF 0.75 VOLTS, LEADS 1-1, &1-3 USE COL D.
   WITH 12/15 AMP CHARGER, MAXIMUM VOLTAGE DROP OF 0.75 VOLTS, LEADS 1-1, & 1-3 USE COL E. TO MEET THE NFPA110 REQUIREMENT TO RETURN A FULLY DISCHARGED BATTERY TO 100% OF IT'S AMPERE-HOUR RATING WITHIN 24 HOURS USE COL. E.
2. FOR MULTIPLE TRANSFER SWITCHES, DUPLICATE RUN #1 FOR SWITCH. DAISY CHAIN CONNECTION IS ACCEPTABLE PROVIDED SIZE & DISTANCE TO THE LAST SWITCH MEET THE SPECS IN NOTE 1.
3. CONNECT AN OPEN DRY CONTACT BETWEEN THE APPLICABLE TERMINAL AND COMMON (TB2-8), FOR REMOTE TEST, TRANSFER INHIBIT AND RETRANSFER INHIBIT. CLOSE TO ACTIVATE.
4. CONTACTS RATED: 4 AMPS AT 30 VDC OR 120V MAX.
5. REFER TO ONAN 900-0529 POWERCOMMAND NETWORK INSTALLATION & OPERATION MANUAL FOR WIRING INSTRUCTIONS, WIRE SIZE, AND LENGTH. USE STRANDED TWISTED PAIR WIRES WHEN CONNECTING DATA1 AND DATA2 TO NETWORK. PART # 0334-1350 OR EQUAL.
6. CONNECTIONS TO TB1-4 THRU 7 ON GENSET ARE FOR CUSTOMER USE AND MAY BE CONFIGURED TO DISPLAY CUSTOM ALARM MESSAGES ON GENSET CONTROL. LOW FUEL IS REQUIRED FOR NFPA110 COMPLIANCE.
7. INSTALL JUMPER BETWEEN TB2-1 & TB2-2.
8.
9. TRANSFER SWITCH SHOWN CLOSED TO NORMAL.
10. CONFIGURATION SHOWN IS FOR ATS-MOUNTED BATTERY CHARGER. IF WALL-MOUNTED CHARGER IS USED, CONNECT B+ AND GND FROM CHARGER DIRECTLY TO BATTERY OR STARTER.
11. USE THE REMOTE TEMPERATURE PROBE (0193-0530).
12. THE FOLLOWING FAILURES WILL CAUSE A BATTERY CHARGER ALARM OUTPUT:
    LOW BATTERY VOLTAGE, HIGH BATTERY VOLTAGE, LOW AC INPUT VOLTAGE, HIGH AC INPUT VOLTAGE OVERCURRENT, HIGH CHARGER TEMPERATURE, BATTERY FAILURE, HIGH BATTERY TEMPERATURE (NOT AVAILABLE ON 2 AMP CHARGER).
13.
14. REFER TO 0900-0301 FOR INSTALLATION OF 0300-5929.
15. 0300-5929 COMMUNICATION ONLY AVAILABLE WITH PCC2100 SOFTWARE VERSION 2.400 OR HIGHER.

(NOTE 1)

WIRE SIZE (AWG)	DISTANCE IN FEET, ONE WAY (MULTIPLY BY 0.3 FOR METERS)				
	A	B	C	D	E
16	1000	90	-	50	-
14	1600	150	20	80	5
12	2400	225	30	125	10
10	4000	350	50	200	15
8	-	600	80	300	25
6	-	1000	125	500	40

No. 630-2810 Sh 7 of 11
Rev. F
Date: 9/2010

FIGURE 12. TYPICAL INTERCONNECTION WIRING DIAGRAM (WITH PCC2100)

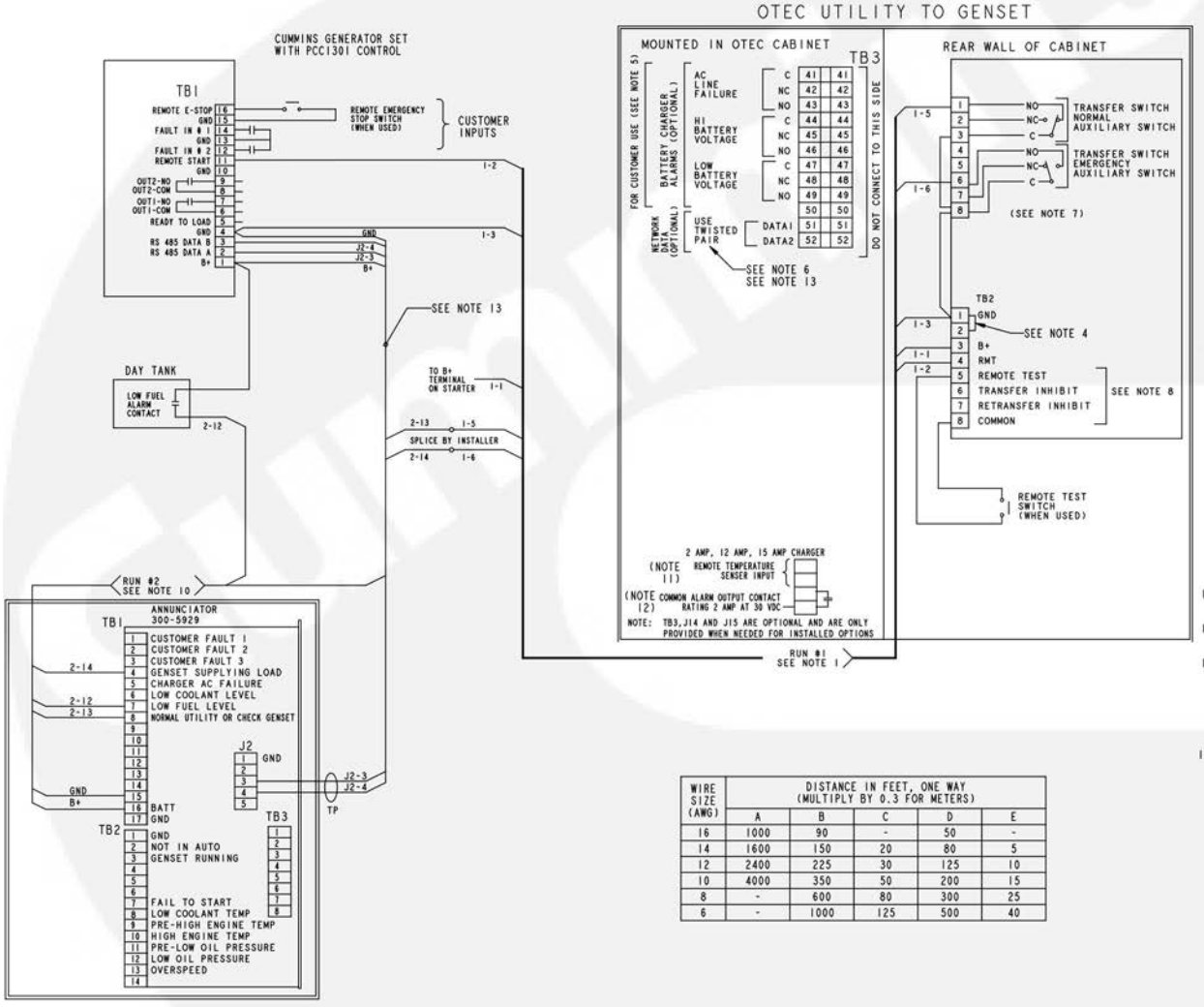

WIRE SIZE (AWG)	DISTANCE IN FEET, ONE WAY (MULTIPLY BY 0.3 FOR METERS)				
	A	B	C	D	E
16	1000	90	-	50	-
14	1600	150	20	80	5
12	2400	225	30	125	10
10	4000	350	50	200	15
8	-	600	80	300	25
6	-	1000	125	500	40

NOTES:

1. WIRE SIZES MUST BE AS FOLLOWS:
   RUN #1-GENSET TO TRANSFER SWITCH-LEAD SIZE MUST BE INCREASED IF A BATTERY CHARGER IS INSTALLED IN THE SWITCH.
   WITH NO BATT CHARGER-LEADS 1-1, -2, -3, -5, -6 USE COL. A.
   WITH 2 AMP CHARGER, MAXIMUM VOLTAGE DROP OF 1.5 VOLTS, LEADS 1-1, &1-3 USE COL B.
   WITH 12/15 AMP CHARGER MAXIMUM VOLTAGE DROP OF 1.5 VOLTS, LEADS 1-1 & 1-3 USE COL. C.
   WITH 2 AMP CHARGER, MAXIMUM VOLTAGE DROP OF 0.75 VOLTS, LEADS 1-1, &1-3 USE COL D.
   WITH 12/15 AMP CHARGER, MAXIMUM VOLTAGE DROP OF 0.75 VOLTS, LEADS 1-1, & 1-3 USE COL E. TO MEET THE NFPA110 REQUIREMENT TO RETURN A FULLY DISCHARGED BATTERY TO 100% OF IT'S AMPERE-HOUR RATING WITHIN 24 HOURS USE COL. E.
2. RUN #2-GENSET TO ANNUNCIATOR-ALL LEADS, USE COL. A
3. FOR MULTIPLE TRANSFER SWITCHES, DUPLICATE RUN #1 FOR EACH SWITCH. DAISY CHAIN CONNECTION IS ACCEPTABLE PROVIDED WIRE SIZE & DISTANCE TO THE LAST SWITCH MEET THE SPECS IN NOTE 1.
4. INSTALL JUMPER BETWEEN TB2-1 & TB2-2.
5. CONTACTS RATED: 4 AMPS AT 30 VDC OR 120V MAX.
6. USE STRANDED TWISTED PAIR WIRES WHEN CONNECTING DATA1 AND DATA2 TO THE NETWORK.
7. TRANSFER SWITCH SHOWN CLOSED TO NORMAL
8. CONNECT AN OPEN DRY CONTACT BETWEEN THE APPLICABLE TERMINAL AND COMMON (TB2-8). FOR REMOTE TEST, TRANSFER INHIBIT AND RETRANSFER INHIBIT. CLOSE TO ACTIVATE.
9. CONTACTS RATED: 2 AMPS AT 30 VDC OR 0.60 AMPS AT 120 VAC.
10. REFER TO 0900-0301 FOR INSTALLATION OF 0300-5929.
11. USE THE INVENTER REMOTE TEMPERATURE PROBE (0193-0530).
12. THE FOLLOWING FAILS WILL CAUSE A BATTERY CHARGER ALARM OUTPUT:
    LOW BATTERY VOLTAGE, HIGH BATTERY VOLTAGE, LOW AC INPUT VOLTAGE, HIGH AC INPUT VOLTAGE OVERCURRENT, HIGH CHARGER TEMPERATURE, BATTERY FAILURE, HIGH BATTERY TEMPERATURE (NOT AVAILABLE ON 2 AMP CHARGER).
13. NETWORK CONNECTIONS: USE BELDEN 9729 24 GAUGE TWISTED, STRANDED, SHIELDED CABLE. SHIELD SHOULD BE GROUNDED AT ONE END. TOTAL NETWORK LENGTH NOT TO EEXCEED 4000 FEET. UP TO 20 NODES CAN BE CONNECTED TO THE NETWOK. (NOTE ANY COMMUNICATIONS WIRE CONNECTED TO THE GENSET SHOULD BE STRANDED CABLE.).

No. 630-2810 Sh 9 of 11
Rev. F
Date: 9/2010

FIGURE 13. TYPICAL INTERCONNECTION WIRING DIAGRAM (WITH PCC1301)

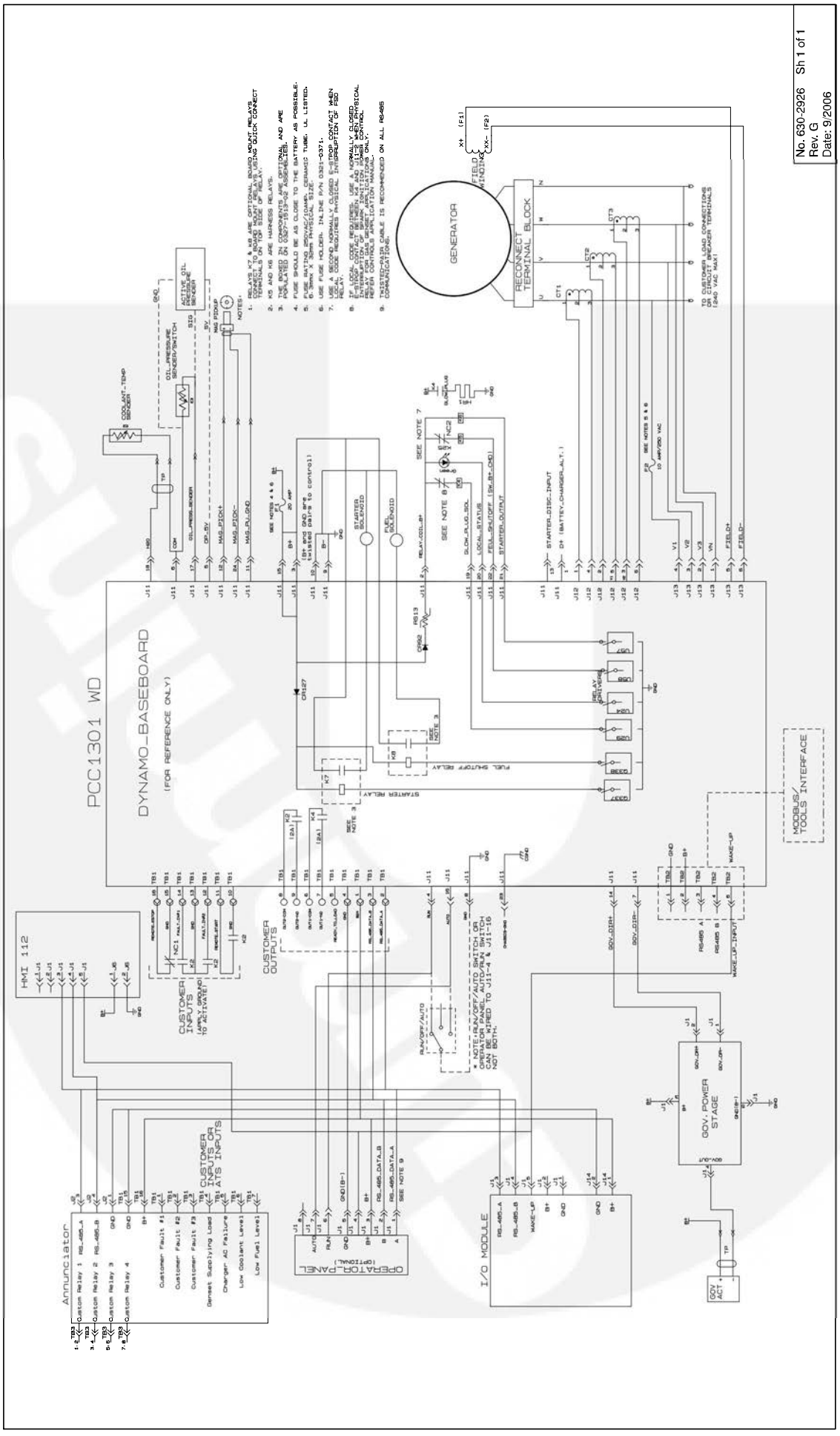

FIGURE 14. 1301 CONTROL WIRING DIAGRAM

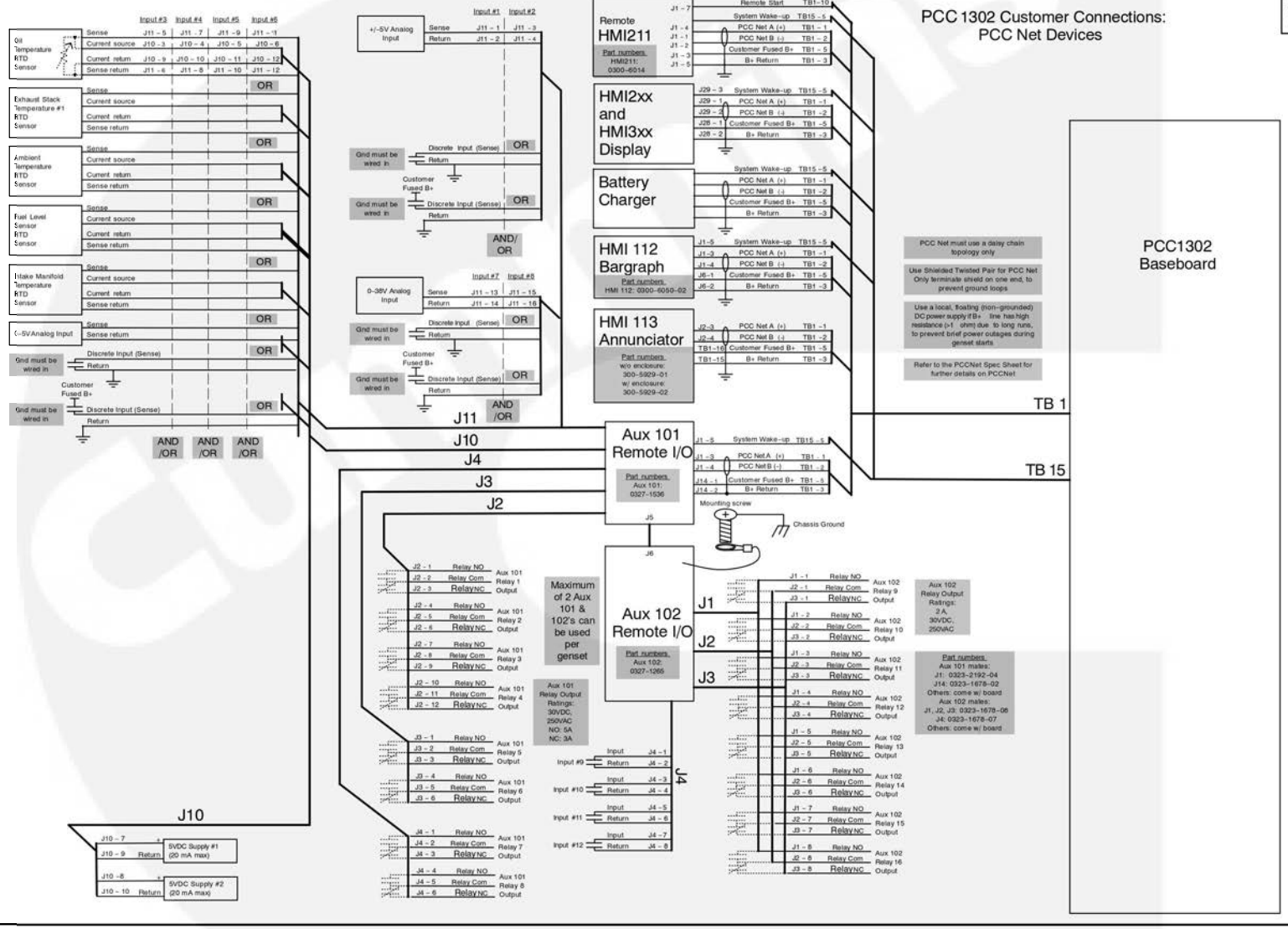

FIGURE 15. 1302 CONTROL WIRING DIAGRAM

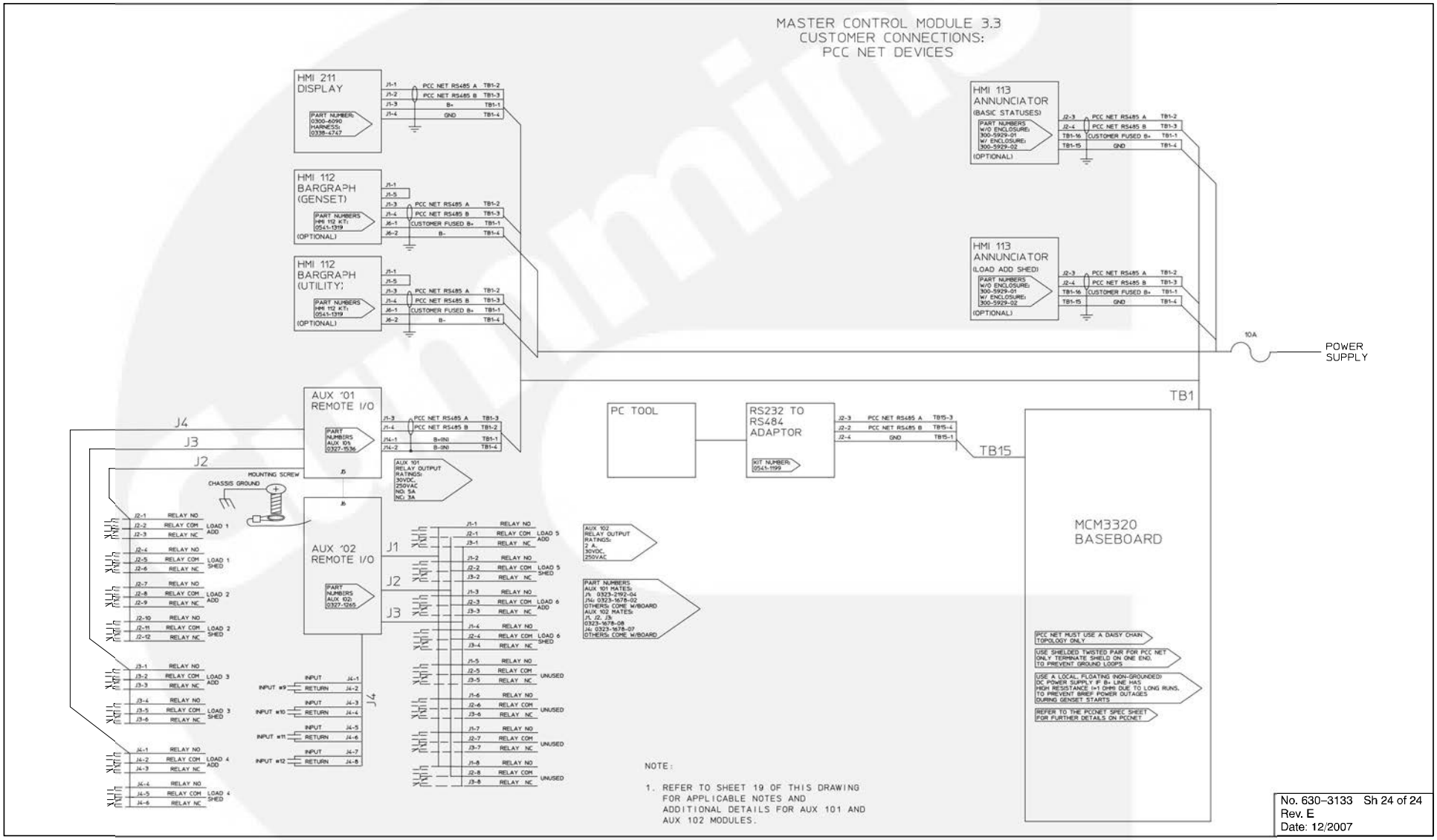

No. 630–3133 Sh 24 of 24
Rev. E
Date: 12/2007

FIGURE 16. MCM3320 CONTROL WIRING DIAGRAM

THIS PAGE LEFT INTENTIONALLY BLANK

This Page Left Intentionally Blank

Cummins Power Generation
1400 73rd Ave. NE
Minneapolis, MN 55432 USA

Phone 1 763 574 5000
Toll-free 1 800 888 6626
Fax 1 763 574 5298
Email www.cumminsonan.com/contact
www.cumminsonan.com

Cummins®, the "C" logo, and "Our energy working for you." are trademarks of Cummins Inc.

©2011 Cummins Power Generation, Inc. All rights reserved.

Installation & Operation Manual

NRG12-10: 12-Volt, 10-Amp Battery Charger
NRG24-10: 24-Volt, 10-Amp Battery Charger
NRG22-10: 12/24-Volt, 10-Amp Battery Charger

SENS Part Number:	101295
Document Revision:	Q
DCN Number:	106080
Date:	January 17, 2012

Installation or service questions?
Call SENS at 1.800.742.2326 (303.678.7500)
between 8 a.m. and 5 p.m. (Mountain Time)
Monday through Friday, or visit our website.

Copyright © Stored Energy Systems LLC 2006

SENS®
Our energy means business™
1840 Industrial Circle
Longmont, CO 80501
Phone: 303.678.7500
800.742.2326
Fax: 303.678.7504
Email: service@sens-usa.com
Web: www.sens-usa.com

IMPORTANT SAFETY INSTRUCTIONS FOR INSTALLER AND OPERATOR

1. **SAVE THESE INSTRUCTIONS.**
2. **DO NOT EXPOSE CHARGER TO RAIN OR SNOW.**
3. Use of an attachment not recommended or sold by SENS may result in a risk of fire, electric shock, or injury to persons.
4. **ONLY TRAINED AND QUALIFIED PERSONNEL MAY INSTALL AND SERVICE THIS UNIT.**
5. Do not operate charger if it has received a sharp blow, been dropped, or otherwise damaged in any way; shut off power at the branch circuit protectors and have the unit serviced or replaced by qualified personnel.
6. To reduce risk of electric shock, disconnect the branch circuit feeding the charger before attempting any maintenance or cleaning. Turning off controls will not reduce this risk.

WARNING:
RISK OF EXPLOSIVE GASES.

A. **WORKING IN THE VICINITY OF A LEAD-ACID OR NICKEL-CADMIUM BATTERY IS DANGEROUS. STORAGE BATTERIES GENERATE EXPLOSIVE GASES DURING NORMAL BATTERY OPERATION. FOR THIS REASON, IT IS OF UTMOST IMPORTANCE THAT EACH TIME BEFORE USING YOUR CHARGER, YOU READ THIS MANUAL AND FOLLOW THE INSTRUCTIONS EXACTLY.**

B. To reduce the risk battery explosion, follow these instructions and those published by the battery manufacturer and the manufacturer of any equipment you intend to use in the vicinity of a battery. Review cautionary markings on these products and on the engine.

7. **PERSONAL PRECAUTIONS**

A. Someone should be within range of your voice or close enough to come to your aid when you work near a storage battery.

B. Have plenty of fresh water and soap nearby in case battery electrolyte contacts skin, clothing, or eyes.

C. Wear complete eye protection and clothing protection. Avoid touching eyes while working near a storage battery.

D. If battery electrolyte contacts skin or clothing, wash immediately with soap and water. If electrolyte enters eye, immediately flood the eye with running cold water for at least 10 minutes and get medical attention immediately.

E. **NEVER** smoke or allow a spark or flame in vicinity of battery or engine.

F. Be extra cautious to reduce risk of dropping a metal tool onto battery. It might spark or short circuit battery or other electrical part that may cause explosion. Using insulated tools reduces this risk, but will not eliminate it.

G. Remove personal metal items such as rings, bracelets, necklaces, and watches when working with a storage battery. A storage battery can produce a short circuit current high enough to weld a ring or the like to metal, causing a severe burn.

H. **Use this charger for charging LEAD-ACID or LIQUID ELECTROLYTE NICKEL-CADMIUM batteries only.** Do not use this battery charger for charging dry cells, alkaline, lithium, nickel-metal-hydride, or sealed nickel-cadmium batteries that are commonly used with home appliances. These batteries may burst and cause injuries to persons and damage to property.

I. **NEVER** charge a frozen battery.

SERVICE HOTLINE: 1.800.742.2326
1.303.678.7500

MODEL NUMBER CONFIGURATION

This manual contains important safety, installation and operating instructions for SENS battery charger model NRG12-10 (configured for 12V,10A only), NRG24-10 (configured for 24V, 10A only) and NRG22-10 (field configurable for 12V or 24V, 10A).

Model Number Breakout

NRG 22-10- ☐☐☐☐

Model	Output Voltage	Output Current	Input Voltage Frequency	Alarm System Code	Agency	Category
	12: 12 volts 24: 24 volts 22: 12/24 volts	10: 10 Amps	H: 120/208-240V, 50/60 Hz** R: 120/208-240V, 60 Hz*	C: 5 Alarms 1: 1 Alarm	L: UL C-UL	S: Standard E: OSHPD labeled***

NOTE: Not all configurations are available on all models.
Contact the factory for confirmation.
*UL listed, CSA certified
**UL listed, CSA certified and CE marked
***California Special Seismic Certification Pre-Approval

INSTALLATION INSTRUCTIONS

WARNING:
ONLY TRAINED AND QUALIFIED
PERSONNEL MAY INSTALL AND SERVICE THIS UNIT.

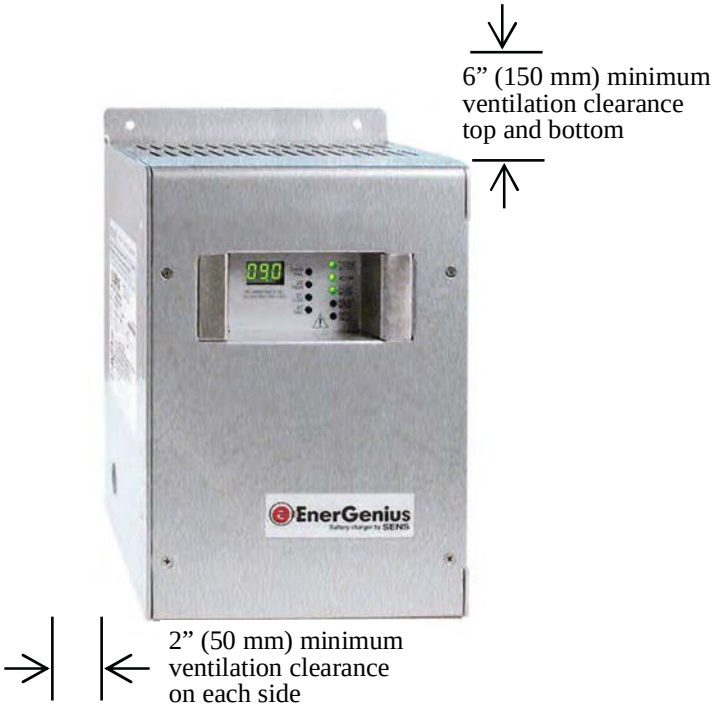

Mount to vertical surface of 3/4” (19 mm) plywood or other material of equal strength and durability, using four mounting screws 1/4” (6 mm) diameter.

SERVICE HOTLINE: 1.800.742.2326
1.303.678.7500

1. PREPARING FOR USE:

WARNING:
ONLY TRAINED AND QUALIFIED PERSONNEL MAY INSTALL AND SERVICE THIS UNIT.

A. INSTALLATION OF THE UNIT MUST COMPLY WITH LOCAL ELECTRICAL CODES AND OTHER APPLICABLE INSTALLATION CODES.
B. INSTALLATION MUST BE MADE ACCORDING TO THE INSTALLATION INSTRUCTIONS AND ALL APPLICABLE SAFETY REGULATIONS.

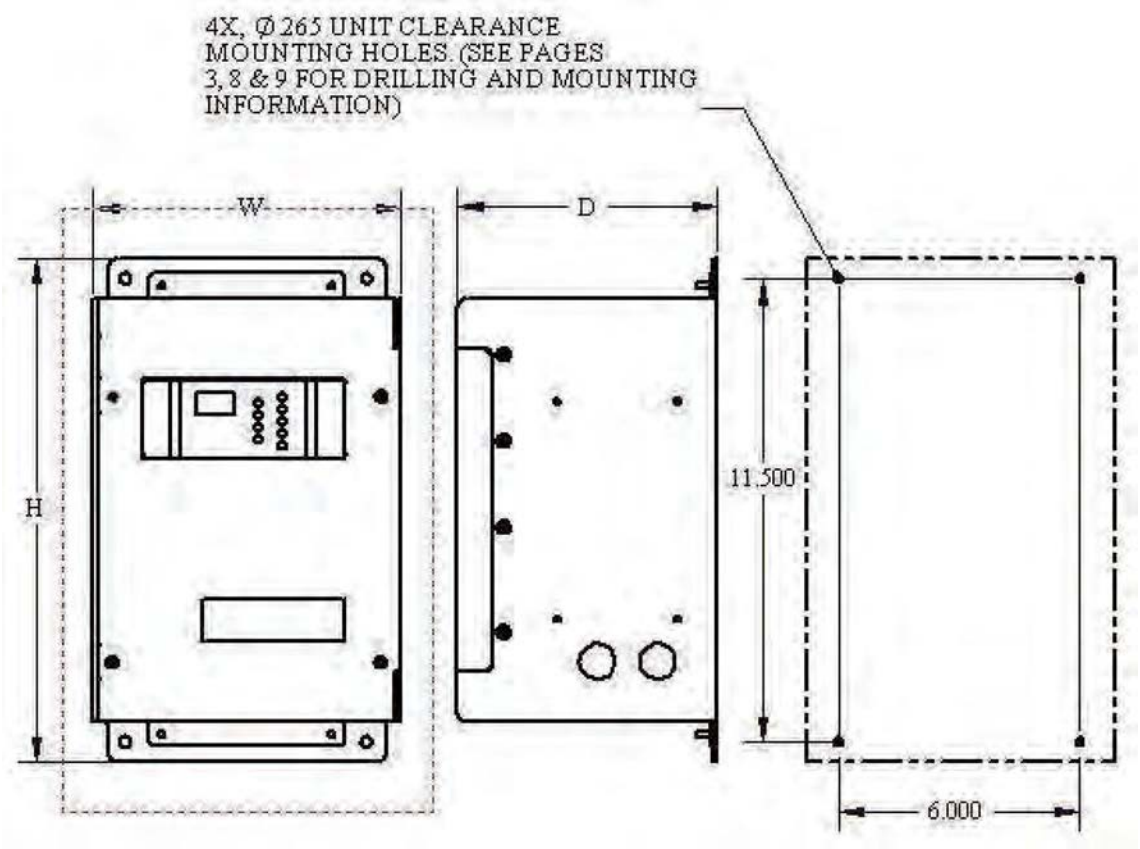

Charger Dimensions:

W: 7.66 Inches (195 mm).
H: 12.50 Inches (318 mm).
D: 6.48 Inches (165 mm).

SERVICE HOTLINE: 1.800.742.2326
1.303.678.7500

FIVE ALARM MODEL SHOWN - SEE PAGE 3 FOR MODEL NUMBER BREAKDOWN

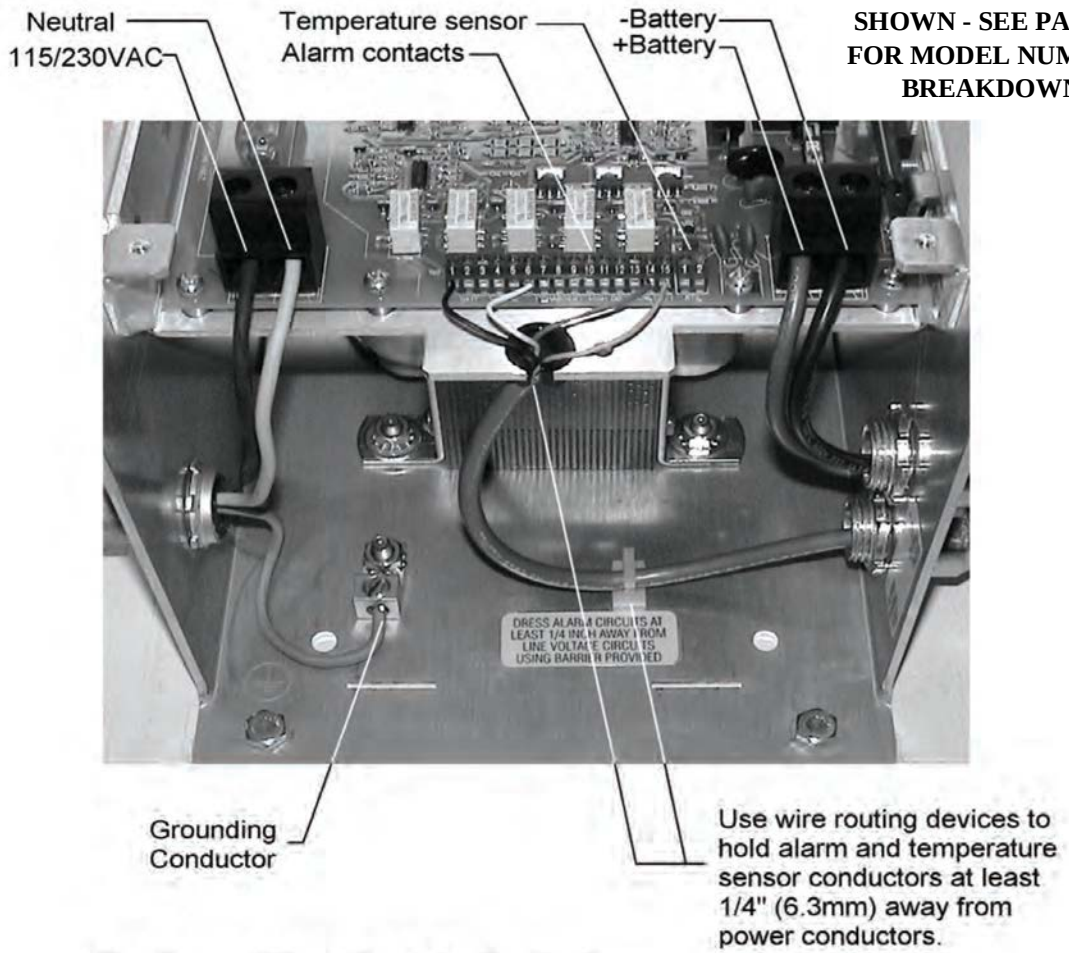

Use conductors rated 90C or higher.
Input conductors must be suitable for 10A circuits.
Battery conductors must be suitable for 30A circuits. See Section 5.
Alarm and temperature sensor may use low power conductors.

C. This unit is permanently connected to the AC circuit and to the battery. An external disconnect device with a minimum of 0.12”(3 mm) pole separation must be located in the AC input to the charger.
   - Do not energize the AC supply circuit until **ALL** wiring is connected, internal controls are properly set, and the cover is secured. Always shut the AC supply circuit off before installing or removing any wiring or opening the cover for any reason.
   - Always observe proper polarity of the DC output leads.
   - Always connect the output leads in this order: ungrounded charger output first, then ungrounded battery terminal, then grounded charger output, and grounded battery terminal last. If the battery must be disconnected for service, remove the output wiring in the reverse of the order given above.

D. Be sure battery terminals are clean and properly tightened. Be careful to keep corrosion from coming in contact with eyes.

E. Add distilled water to each cell until the electrolyte reaches the level specified by the battery manufacturer. This helps purge excess gas from the cells. Do not over fill. For a battery without cell caps, carefully follow the manufacturer’s recharging instructions.

F. Study all battery manufacturer’s specific precautions such as removing or not removing cell caps while charging and recommended rates of charge.
   - The recommended charge current range must include the rated output current of this charger, which is 10 amperes.
   - Set the float voltage jumper to the battery manufacturer’s recommended float charge voltage. Incorrect charge voltage will accelerate generation of explosive gases, increasing the risk of fire or explosion.

SERVICE HOTLINE: 1.800.742.2326
1.303.678.7500

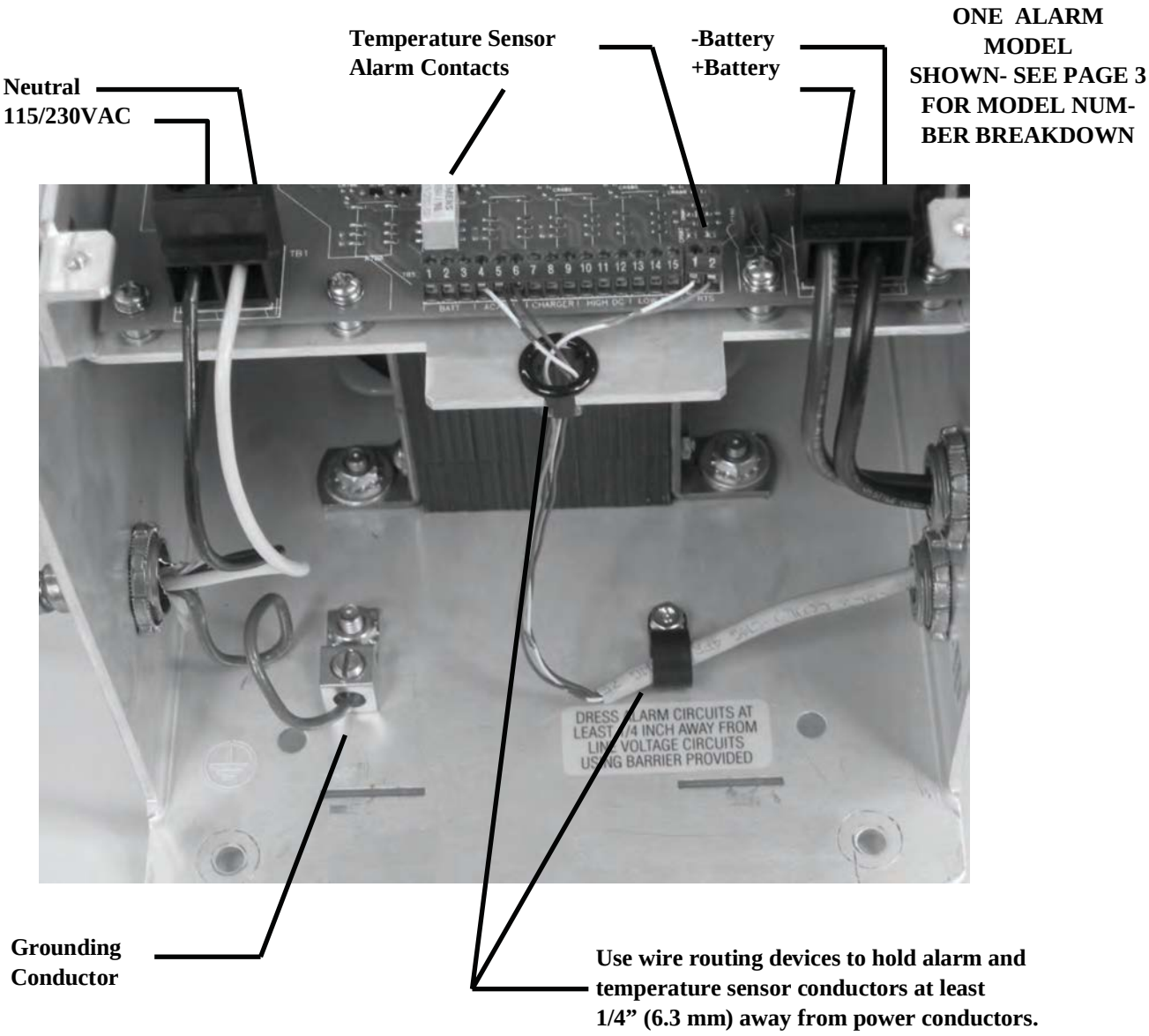

G. Enable the automatic boost charge mode (equalizing charge) only if recommended by the battery manufacturer
H. Determine the voltage of the battery by referring to the engine or battery owner's manual and make sure that the 12V/24V select jumper is set to the correct voltage.

2. CHARGER LOCATION

Do not set a battery or any other object on top of the charger. This will obstruct the ventilation openings and cause excessive heating. Ensure the charger is protected from blowing or dripping water.

3. GROUNDING INSTRUCTIONS

This battery charger should be connected to a grounded, metal, permanent wiring system; or an equipment grounding conductor (earthing conductor) should be run with the circuit conductors and connected to the equipment grounding terminal in the charger. This terminal is marked with the ground symbol. Connections to the battery charger should comply with all local codes and ordinances.

SERVICE HOTLINE: 1.800.742.2326
1.303.678.7500

4. NEUTRAL CONNECTION

The grounded circuit conductor (neutral) should be connected to the terminal marked "N" on the input terminal block, TB1.

5. WIRE RATINGS

A. All conductors should be rated for use at 90º C or higher.

B. All input and output conductor sizes should be coordinated with the fault protection devices: 10A on AC input (14 AWG, 2.5 mm^2 typical), 30A on DC output (10 AWG, 6.0 mm^2 typical). 1 A on Alarm terminal block (20 AWG, 0.5 mm^2 typical).

C. *Before installation*, ensure adequate battery to charger wire gauge. Wire gauge that is too small may activate the open battery detector and the charger will shut down. The maximum allowed resistance seen by the charger is found in TABLE 1. These figures already include an allowance for charger variations (they are 80% of the typical trip-point) and are for the complete circuit: total of battery leads, battery's internal resistance, and any external equipment. The total resistance seen by the charger must not exceed the following values:

TABLE 1

	12V	24V
Maximum Resistance	58mΩ	116mΩ

D. To determine the appropriate cable and length, please refer to the following table:

TABLE 2

Wire Size		Resistance per Foot	Maximum Charger to Battery Distance (Ft.)		Recommended Charger to Battery Distance (Ft.)	
AWG	**mm^2**	**mΩ/Ft.**	**12V**	**24V**	**12V**	**24V**
10	6.0	1.00	25	50	10	19
8	10	0.63	40	79	15	30
6	16	0.40	63	126	24	48

The above lengths consider the resistance of the battery and cables only and do not take into account any additional interconnects.

The above lengths are for operation at 25C. For high temperature installations (40C) reduce lengths by 10%.

In the case of high resistance in the cables to the battery the charger Battery Fault LED may flash (approximately once every 60 seconds). Cable runs exceeding the proper length for the cable gauge used most often cause this problem. The appropriate solution is to change the cable gauge to properly correspond with the necessary cable length (see TABLE 2). In some cases where the resistance is not too far above maximum, the charger may recover after some time (approximately 10 minutes) and start charging the batteries. If it is not possible to decrease the system resistance the Battery Fault feature can be disabled. Please contact SENS at 1-800-742-2326 for further information.

E. Refer to local electrical codes for additional requirements.

F. See Section 10 for Terminal Block wire ranges.

6. FUSE RATINGS

A. CAUTION: For continued protection against risk of fire, replace only with same type and rating of fuse.

B. DC Output Fuse – SENS part number 304530. Bussman Type BK/ATC-30, or Littelfuse 257030 [ATO30], 30A, 32V, fast acting, blade type automotive

C. AC Input Fuse – SENS part number 304473. Bussman Type BK/AGC-10, 10A, 250VAC, fast acting, ferrule type cylindrical, ¼" X 1-¼"

SERVICE HOTLINE: 1.800.742.2326
1.303.678.7500

7. MOUNTING LOCATION

A. See the safety instructions for important information concerning the charger location.
B. The charger should be installed in a sheltered area, protected from rain and snow.
C. The charger should not be located where temperatures are expected to be colder than -20º C, or hotter than +40º C for operation at rated output current.

> **WARNING:**
> **NEVER CHARGE STORAGE BATTERIES AT TEMPERATURES ABOVE OR BELOW THE LIMITS SPECIFIED BY THE BATTERY MANUFACTURER. NEVER ATTEMPT TO CHARGE A FROZEN BATTERY.**

D. Allow sufficient room for routing the fixed wiring to the charger. AC input enters the left side; DC output and alarms exit on the right.
E. Leave clear space for ventilation all around the unit: at least 6 inches (15 cm) at the top and bottom; at least 2 inches (5 cm) on the sides.
F. Charger should be mounted on a flat vertical surface so that the chassis does not warp when tightened to the wall.
G. The charger should be mounted vertically, with the input and output terminal blocks lowermost.

> **WARNING:**
> **OTHER MOUNTING ORIENTATIONS INTERFERE WITH PROPER VENTILATION AND MAY CAUSE THE CHARGER TO OVERHEAT.**

H. Do not mount the charger over any heat generating equipment.
I. Minimize vibrations that the charger will be subjected to.

8. STATIC DISCHARGE PRECAUTIONS

The printed circuit board contains static sensitive components. Damage can occur even when static levels are too low to produce a noticeable discharge shock. To avoid static discharge damage:

A. Handle the charger by the chassis only. Remove the cover only when access is essential for installation and service, and replace it promptly when finished.
B. If possible, wear an approved static protection strap. If one is not available, touch one hand to the chassis before contacting any other part of the charger.

9. MOUNTING PROCEDURES

> **WARNING:**
> **THIS CHARGER IS INTENDED FOR COMMERCIAL AND INDUSTRIAL USE. ONLY TRAINED PERSONNEL WHO ARE QUALIFIED TO PERFORM ELECTRICAL INSTALLATIONS SHOULD INSTALL OR SERVICE THIS UNIT.**

The charger mounts to a wall or other vertical support. The mounting surface must safely support the charger's weight, which is 25 pounds (11.3 kg), and also the weight of the fixed wiring.

<u>Mounting on a concrete surface:</u>

- All mounting hardware is provided by the installer.
- Use optional ¾ inch thick, 18 in. x 24 in. sheet of marine plywood (not provided) to provide a suitable mounting surface for the charger.
- Drill four holes to secure the plywood to the wall using a minimum of four ¼ in. drive pin type expansion anchors to secure the plywood to the wall. Secure the plywood to the wall.
- Drill four holes using the mounting diagram on pg. 4 for ¼ in. (or M6) draw nut type expansion anchors through the plywood into the cement wall.
- Insert the four draw nut type expansion anchors through the plywood into the cement wall.
- Mount charger to draw nut type expansion anchors with nuts and flat washers.

SERVICE HOTLINE: 1.800.742.2326
1.303.678.7500

Mounting on a drywall:

- Use ¾ in. thick plywood to span two vertical support members in the wall. The plywood sheet normally does not have to be more that 2 ft. by 2 ft. square.
- Place plywood to avoid electrical wiring, plumbing, etc., concealed behind wall.
- Secure the plywood to the vertical support members using ¼ in. by 2 in. lag bolts and flat washers in a minimum of four places.
- Mark four holes on the plywood using the mounting diagram on pg. 4. Drill pilot holes into the plywood to secure the mounting bolts.
- Mount charger using four ¼ in. by 1/2 in. or M6 lag bolts and flat washers.

Mounting on a metal surface:

- Mount charger using four ¼ -20 by 3/4 in. hex head bolts, flat washers and split lock washers or M6 fastening hardware suitable to attach the battery charger to a frame, panel or cross member in four places. Use the mounting diagram on pg. 4 to place the pilot holes, if needed.
- Tighten all bolts to recommended torque of 45-50 inch pounds.

---

10. WIRING

A. All wiring must comply with applicable codes and local ordinances. See Section 5 for recommended gauges.

B. The charger contains a DC output fuse for *internal* fault protection, but this will not protect the DC wiring from fault currents available *from the battery*. **CONSULT NATIONAL CODES AND LOCAL ORDINANCES TO DETERMINE IF ADDITIONAL BATTERY FAULT PROTECTION IS NECESSARY IN YOUR INSTALLATION**

WARNING:
ENSURE THAT AC POWER IS DISCONNECTED AT THE CIRCUIT BREAKER OR OTHER SAFETY DISCONNECT BEFORE WIRING THE CHARGER.

C. Connect the equipment grounding conductor (earthing) to the charger's grounding terminal. This should always be the first wire connected and the last wire disconnected.

D. Connect the DC output conductors to TB3. Make the connections in the order shown in Figure 2A (negative ground) or Figure 2B (positive ground). The terminals accept 14 through 6 AWG (2.5 through 16 mm^2) conductors.

CAUTION:
OBSERVE POLARITY. THE POSITIVE CHARGER OUTPUT TERMINAL IS LABELED "+" AND THE NEGATIVE TERMINAL IS LABELED "-".

FIVE ALARM MODEL SHOWN- SEE PAGE 3 FOR MODEL NUMBER BREAKDOWN

WARNING:
BE SURE TO ROUTE DC POWER WIRING AT LEAST ¼ INCH (6.3 MM) AWAY FROM AC WIRING, ALARM WIRING, AND THE CIRCUIT BOARD.

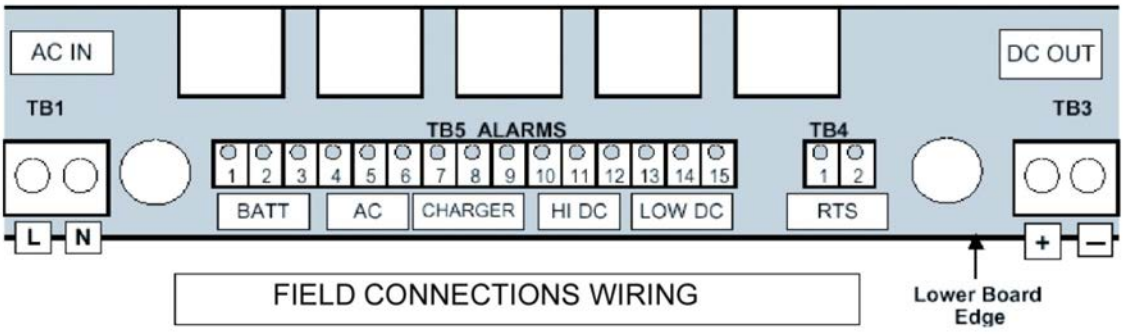

SERVICE HOTLINE: 1.800.742.2326
1.303.678.7500

ONE ALARM MODEL SHOWN - SEE PAGE 3 FOR MODEL NUMBER BREAKDOWN

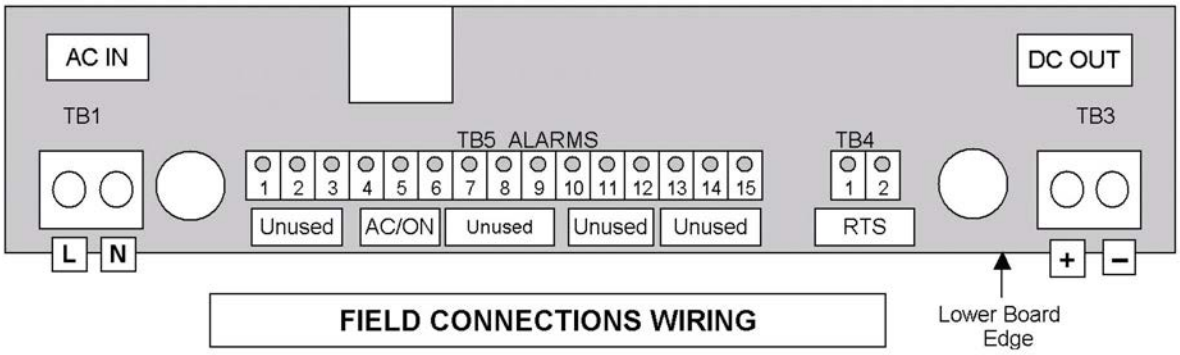

FIGURE 2A

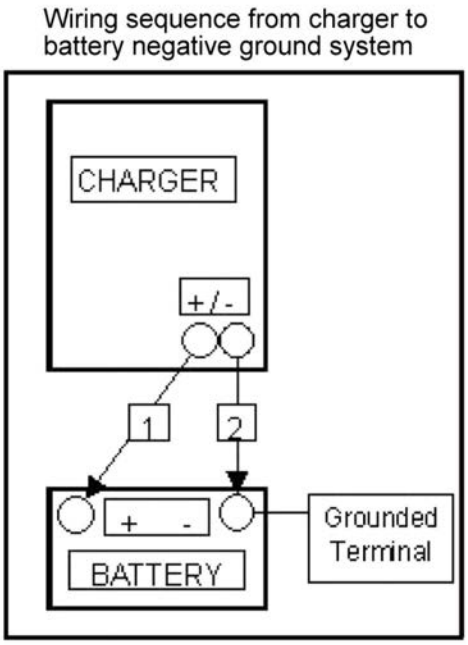

FIGURE 2B

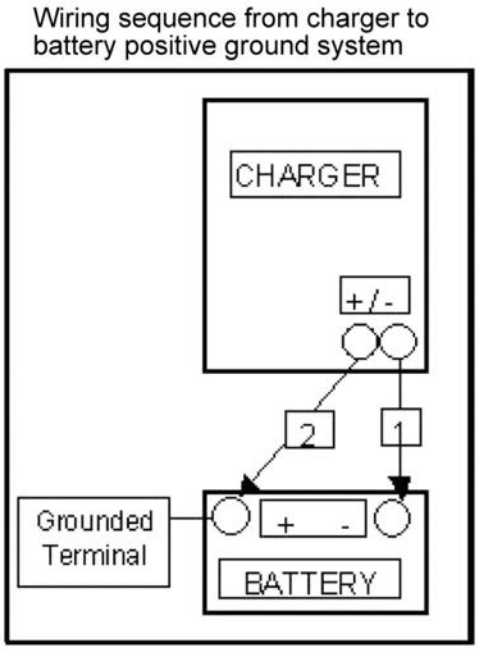

E. Connect the AC line and neutral conductors at TB1. If there is an identified grounded circuit conductor (neutral), attach it to the terminal marked N. TB1 will accept 14-6 AWG (2.5-16 mm^2) conductors.

WARNING:
BE SURE TO ROUTE ALL AC WIRING AT LEAST ¼ INCH (6 MM) AWAY FROM DC WIRING, ALARM WIRING, AND THE CIRCUIT BOARD.

SERVICE HOTLINE: 1.800.742.2326
1.303.678.7500

F. If the optional alarms are used, connect the alarm wiring to their respective terminals on TB5. Route alarm wiring through the plastic bushing below TB5, keeping the conductors at least ¼ inch (6 mm) away from DC wiring, AC wiring, and the circuit board. The terminals accept 24-16 AWG (0.25-1.5 mm^2) conductors.

WARNING:
CONNECT ALARM TERMINALS ONLY TO LOW VOLTAGE, LIMITED ENERGY ("CLASS 2") CIRCUITS. ALARM CIRCUITS ARE RATED 2A AT 30 VDC, 0.5A AT 125 VAC, MAXIMUM SWITCHING CAPACITY 62.5VA, 60W.

FIVE ALARM MODEL

RELAY CONTACTS	BATTERY FAULT ALARM	AC FAIL ALARM	CHARGER FAIL ALARM	HIGH BATTERY ALARM (HI DC)	LOW BATTERY ALARM (LO DC)
Common	TB5-1 COM	TB5-4 COM	TB5-7 COM	TB5-10 COM	TB5-13 COM
OPEN ON ALARM	TB5-2 OK	TB5-5 OK	TB5-8 OK	TB5-11 OK	TB5-14 OK
CLOSE ON ALARM	TB5-3 FAIL Defaults to OK with no AC input	TB5-6 FAIL Defaults to Fail with no AC input	TB5-9 FAIL Defaults to OK with no AC input	TB5-12 FAIL Defaults to OK with no battery	TB5-15 FAIL Defaults to fail with no battery

ONE ALARM MODEL

RELAY CONTACTS	Not Used	MASTER ALARM	Not Used	Not Used	Not Used
Common	TB5-1 No Connection	TB5-4 COM	TB5-7 No Connection	TB5-10 No Con-nection	TB5-13 No Con-nection
OPEN ON ALARM	TB5-2 No Connection	TB5-5 OK	TB5-8 No Connection	TB5-11 No Con-nection	TB5-14 No Con-nection
CLOSE ON ALARM	TB5-3 No Connection	TB5-6 FAIL Defaults to Fail with no AC input	TB5-9 No Connection	TB5-12 No Con-nection	TB5-15 No Con-nection

G. If the optional remote temperature sensor is used:

- Remove the internal sensor at TB4, if it is present.
- Locate the remote sensor where it will accurately detect the battery temperature.
- Connect the remote sensor leads to TB4. The sensor is not polarized, so it does not matter which lead connects to terminal #1.
- Route sensor wiring through the plastic bushing below TB5, keeping the conductors at least ¼ inch (6 mm) away from DC wiring, AC wiring, and the circuit board.

SERVICE HOTLINE: 1.800.742.2326
1.303.678.7500

H. Verify that all connections are secure and in the proper locations. Tighten all unused screws on the terminal blocks to secure them against vibration.
I. Ensure all wires are routed so the cover will not pinch them.

11. INTERNAL ADJUSTMENTS

WARNING:
MAKE SURE THE AC POWER TO THE CHARGER IS SHUT OFF WHILE MAKING THE FOLLOWING ADJUSTMENTS.

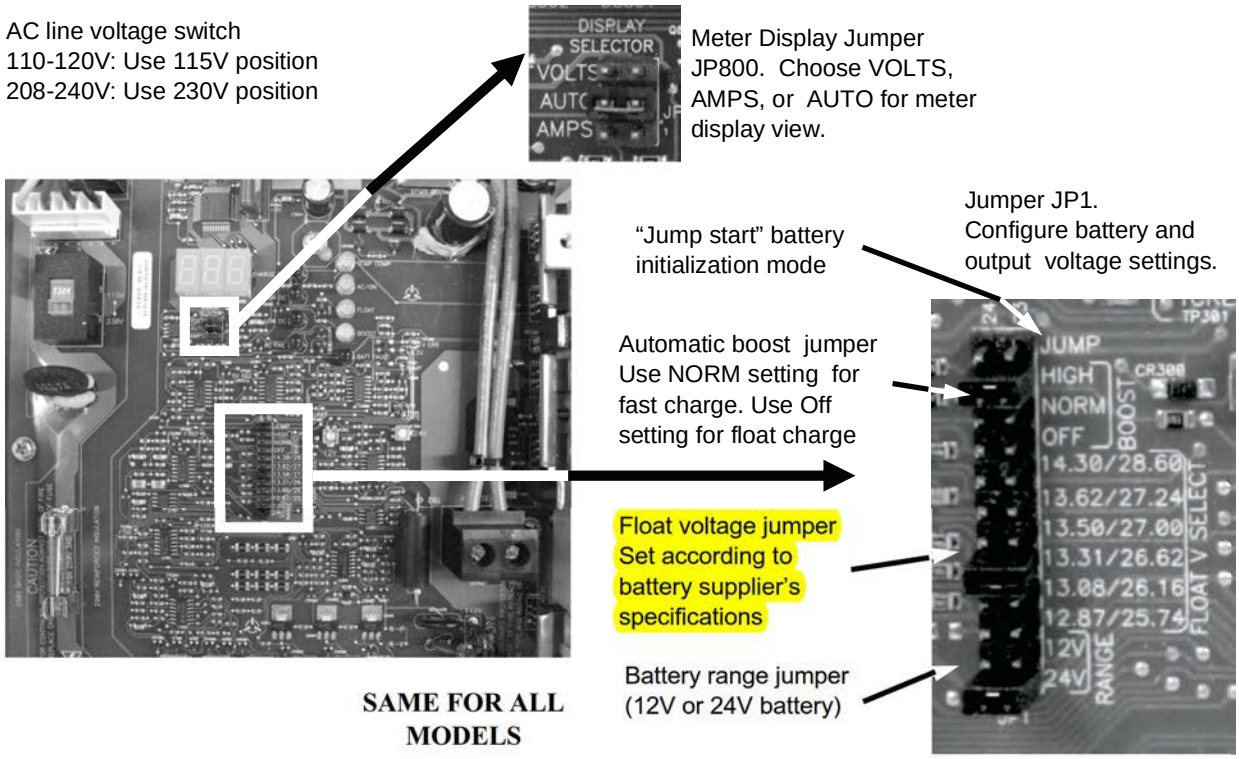

A. Set the AC voltage select switch (SW100) according to the line voltage. Use the 115V position for nominal mains voltages between 110V and 120V. Use the 230V position for nominal mains voltages between 208V and 240V.
B. Set the battery range jumper (JP1A) according to nominal battery voltage. Use the 12V position for 12V batteries. Use the 24V position for 24V batteries.
C. Set the boost mode jumper (JP1B) according to whether the battery should have automatic boost charging. If the battery manufacturer recommends boost charging (equalization) use the NORMAL position. If not, use the OFF position.
D. Set the float voltage select jumper (JP1C) according to the battery manufacturer's recommended 25ºC float voltage. The settings are:
- 14.30/28.60 for 10 or 20 cell Nickel Cadmium at 1.43V/cell
- 13.62/27.24 for 6 or 12 cell (VRLA) lead-acid at 2.27V/cell, and for 19 cell Nickel Cadmium at 1.43V/cell
- 13.50/27.00 for 6 or 12 cell (VRLA or high capacity) lead-acid at 2.25V/cell, and for 19 cell Nickel Cadmium at 1.42V/cell
- 13.31/26.62 for 6 or 12 cell (flooded) lead-acid at 2.22V/cell, and for 19 cell Nickel Cadmium at 1.40V/cell
- 13.08/26.16 for 6 or 12 cell lead-acid at 2.18V/cell
- 12.87/25.74 for 9 or 18 cell Nickel Cadmium at 1.43V/cell

SERVICE HOTLINE: 1.800.742.2326
1.303.678.7500

E. Set the Display Selector jumper to <u>one</u> of the 3 available positions on JP800 (see photograph previous page):
- VOLTS – Place the short jumper in the "upper" position next to the word "VOLTS". The 3-digit LED meter display will show DC Volts only
- AUTO – Place the short jumper in the center position next to the word "AUTO". The 3-digit LED meter display will automatically and continuously alternate between DC Amps and DC Volts. The display shows DC Amps for approximately 6 seconds and DC Volts for approximately 3 seconds.
- AMPS – Place the short jumper in the "lower" position next to the word "AMPS". The 3-digit LED meter display will show DC Amps only.

> **WARNING:**
> **USE <u>ONE</u> JUMPER ONLY ON THE DISPLAY SELECTOR JP800. USE ONLY THE "SHORT" JUMPER PROVIDED FOR JP800, TO AVOID INTERFERENCE WHEN REPLACING THE COVER ("TALL" JUMPERS ARE TO BE USED ONLY ON JP1).**

F. The JUMP position allows initial charging of Nickel Cadmium batteries, or new lead acid batteries supplied from the manufacturer dry and discharged, from a zero charge state. The JUMP feature can also be used when recharging excessively discharged batteries already in service. To initially charge/commission zero charge batteries, place a jumper (spare provided with charger) in the JUMP position on JP1. Operate the charger long enough to retain more than 1.5V/cell for lead acid and 1.0V/cell for nickel cadmium batteries or until the charger returns to FLOAT MODE (FLOAT MODE LED will be green). See SENS Application Note 10 to finish fully commissioning the batteries, as using the JUMP feature alone is not sufficient. Once the batteries are fully charged, the jumper may be removed or left in the JUMP position permanently. The jumper may remain in the JUMP position permanently to ensure that the charger is able to recharge very low or dead batteries. If battery voltage is below 9V (12V system) or 18V (24V system) when AC power is restored and the JUMP feature is not activated, the charger will go into Battery Fault (alarm state that disables charger). In this situation the charger will not charge the batteries. If the JUMP feature is enabled when AC power is restored, the charger will begin charging. Depending on the battery state of charge, the charger may go into Battery Fault and remain so for some period of time (generally 12 – 24 hours) while the batteries are slowly charged. The Battery Fault LED will cycle (approximately once every minute) during this time. Once Battery Fault stops cycling, the charger will return to FLOAT or BOOST MODE as normally demanded.

> **WARNING:**
> **USE THE JUMP FEATURE ONLY WITH LIQUID ELECTROLYTE NICKEL-CADMIUM BATTERIES, OR WITH RECENTLY FILLED NEW LEAD ACID BATTERIES SUPPLIED FROM THE MANUFACTURER DRY AND DISCHARGED. WHILE THE JUMP FEATURE MAY BE USED TO CHARGE EXCESSIVELY DISCHARGED LEAD ACID BATTERIES THAT HAVE ALREADY BEEN IN SERVICE, CONSULT THE BATTERY MANUFACTURER TO DETERMINE IF AND HOW THEY CAN SAFELY BE RESTORED TO SERVICE.**

> **WARNING:**
> **LEAVING A JUMPER IN THE JUMP POSITION DISABLES THE BATTERY VOLTAGE INTERLOCK, WHICH INCREASES THE RISK OF ACCIDENTALLY OVERCHARGING 12V BATTERIES WITH 24V SETTINGS. INCORRECT CHARGE VOLTAGE WILL ACCELERATE GENERATION OF EXPLOSIVE GASES, INCREASING THE RISK OF FIRE OR EXPLOSION.**

G. Replace the cover by sliding it straight onto the charger. Ensure the cover's locating tabs engage the slots in the chassis. Secure the cover with its four mounting screws.

12. CHECK OUT

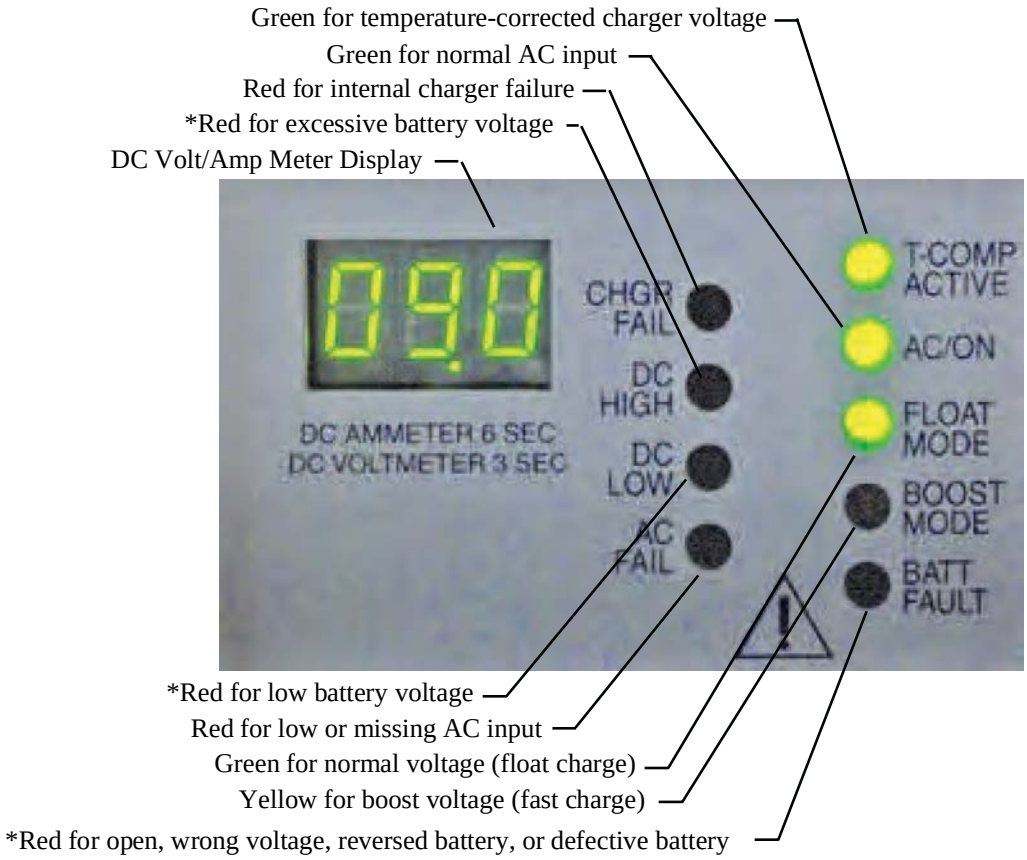

* Active only on five alarm models - see page 3 for model number breakdown

See OPERATOR INSTRUCTION section for LED indicator definitions:

A. Verify the status LEDs:
- **AC FAIL** should be **ON**. If not, the DC output may be open or reversed, or the battery may be extremely discharged.
- **BATT FAULT** should be **OFF**. If it lights, check for reversed polarity of the DC wiring.
- The **DC LOW** (Low Battery) LED may be either on or off, depending on the battery's state of charge.
- All other LEDs and the meter display should be off.
- If the **DC HIGH** LED is on, check battery voltage jumper setting.

B. Apply AC power by closing the branch circuit breaker and any other disconnect devices.

C. The meter display should light immediately after power on. The green **AC/ ON** LED should be lighted. If a temperature sensor is present, either internal or remote, the green **T-COMP** (Temperature Compensation) LED should be lighted.

D. If the **BATT FAULT** LED lights when AC is applied, this indicates that the battery voltage does not agree with the **Range** jumper setting. The charger is interlocked, and will not operate in this condition. Disconnect AC power, then correct the jumper setting or battery voltage before proceeding.

E. After a short delay (typically 10 seconds or less), the charger will produce output.

F. If the meter display jumper is selected to read Amps or automatic Volts/Amps:
- Current should be close to 10A if the battery requires recharging. If automatic boost is enabled, the **BOOST MODE** LED may light, in which case the battery will be charged until it reaches 106% of the float voltage. If boost is disabled, the green **FLOAT MODE** LED should be on and the battery will charge until it reaches the float voltage setting.
- Output current will be low if the battery is fully charged, possibly too low to read on the meter. This is normal, provided the correct charging voltage is present. The green **FLOAT MODE** LED should light when output current is below approximately 9 A (5A for single alarm).

SERVICE HOTLINE: 1.800.742.2326
1.303.678.7500

OPERATOR INSTRUCTIONS

WARNING:
NO OPERATOR SERVICEABLE PARTS INSIDE.
DO NOT OPEN. COVER MUST BE IN PLACE DURING USE.
USE THIS CHARGER FOR CHARGING LEAD-ACID OR NICKEL-CADMIUM BATTERIES ONLY.

A. ADVANCED DESIGN FEATURES

Battery Friendly:

- Float and boost voltage selectable at install per specific battery vendor recommendations.
- Remote temperature compensation for most accurate float and boost voltage control.
- Able to charge a dead battery.
- Float and Boost voltage electronically controlled with a 4-rate fast charge program. See chart below.

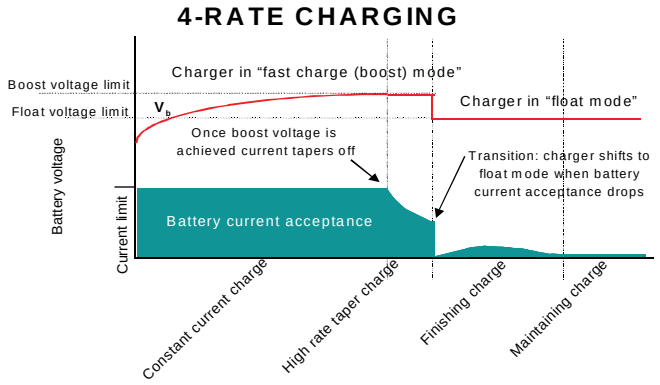

Temperature Compensation:

- The battery charger is temperature compensated to match the negative temperature coefficient of the battery. Thus, the output voltage will increase slightly as the temperature decreases and decrease as temperature increases.
- The output voltage is clamped at 0 and +40 Degrees C to protect against extremely high or low output voltage. See chart below.

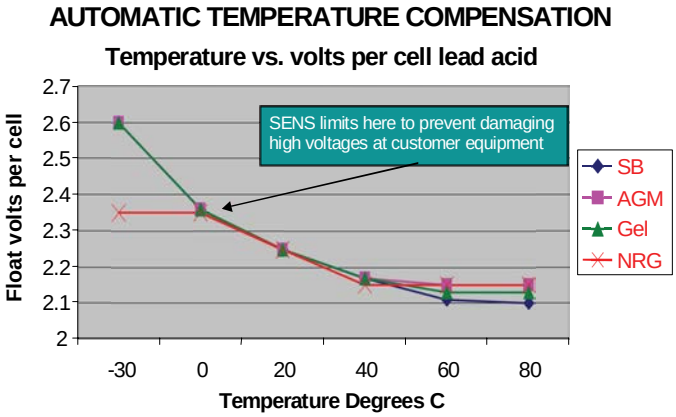

Fault Tolerant: The charger is protected from the following faults:

- Internal power component failures.
- Over heating (over temperature output power reduction).
- Protected against power line transients and surges.

Battery Fault Protection and Alarm:

- The battery charger automatically checks the battery voltage before power-on startup. If the battery volt-

SERVICE HOTLINE: 1.800.742.2326
1.303.678.7500

age is either too high or too low, the charger enters a "lockout" period for approximately 10 seconds before attempting an automatic restart.

- The "JUMP" feature (described in Section 11-F in this manual) may be used to allow the battery charger to override the lockout and start charging a low-voltage discharged battery.
- The battery charger will not start if the battery or battery cables have a short circuit, and will start automatically with a good battery if the short circuit is removed.
- In addition to detecting low battery voltage and short circuits, the battery charger also monitors the peak voltage at its DC output terminals and will enter lockout if the DC cable resistance is too high or if the battery's internal resistance is too high.
- If a battery is connected backwards, this reverse polarity condition will keep the battery charger in lockout and it will remain in lockout until the battery is disconnected. A reverse polarity condition will not blow a fuse; the battery charger will start and run normally when a good battery is connected with correct polarity.
- Whenever one of these fault conditions triggers the battery fault protection circuitry as described above, the "Batt Fault" relay and LED are both activated.
- If polarity is correct, DC cables OK, and the "JUMP" feature attempted, the battery fault alarm most likely indicates a defective battery. Replace with a new battery.

Robust Hardened Construction:

- Shock and Vibration tested to UL 991, 2G.
- Shock and Vibration tested to UL 991, 5G option available.
- Lightning transient immunity to ANSI/IEEE C62.41 Cat. B and EN 50082-2 heavy industrial.
- Wide operating temperature range: -20 to + 40 Degrees C. Charger will operate at reduced output current rating up to +60 Degrees C.
- Conformal coated printed wiring boards for erosion protection.

Worldwide Agency Approvals:

- UL listed, UL 1012, UL 1236.
- CUL listed to CSA C22.2 107.2- M89.
- CE marked for EMC directive (industrial environment) and EN 60335-2-29.
- Worldwide operating voltage and frequency ranges.

B. FRONT PANEL LED INDICATOR DEFINITIONS AND TROUBLE SHOOTING:

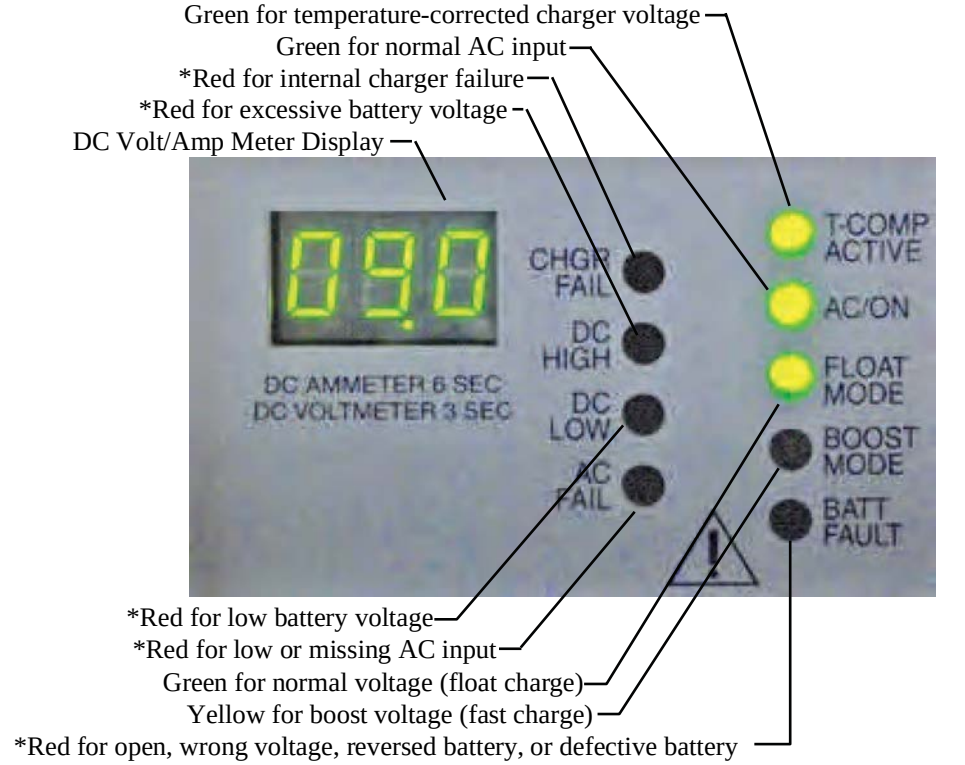

* Active only on five alarm models - see page 3 for model number breakdown

SERVICE
HOTLINE: 1.800.742.2326
1.303.678.7500

ITEM	TEXT	LED	Meaning	Troubleshooting
1	CHGR FAIL	RED	Charger Fail	Charger unable to provide charging current to battery. Replace unit. AC input voltage is too low to supply proper current when load is applied. Control board is damaged and should be re-
2	* DC HIGH	RED	Battery DC Voltage High	Check that the battery range voltage jumper setting agrees with battery used. High battery alarm voltage is 17v for 12v system
3	DC LOW	RED	Battery DC Voltage Low	Check that battery range voltage jumper setting agrees with battery used. Check for defective battery. Check DC load. Low battery alarm voltage is 12v for 12v system
4	AC FAIL	RED	Input AC Missing	Check AC input voltage to charger. Have qualified installer check AC line voltage switch setting. Setting must agree with AC voltage at site. Check AC fuse.
5	T-COMP	GREEN	On if Temperature Compensation Working, Off if Temperature Compensation Option not used.	Confirm if temperature compensation is intended to be used. Only one sensor (Local or remote) should be connected.
6	AC/ ON	GREEN	1 alarm model: Charger operating normally 5 alarm model: AC input good	Should be on in normal use. 1 alarm model: If LED is OFF, AC FAIL, CHGR FAIL or BATT FAULT LED should be ON. 5 alarm model: If LED is OFF, AC FAIL should be ON.
7	FLOAT MODE	GREEN	Charger Output in Float Mode	If the automatic boost jumper is in the OFF location, this LED will always be on. If the automatic boost jumper is in the "NORM" location, this LED will come on after the battery
8	BOOST MODE	AMBER	Charger Output in Boost Mode	This LED will not be on if the automatic boost jumper is in the OFF location, or if the automatic boost jumper is in the "NORM" location and the battery is nearly fully charged up.
9	BATT FAULT	RED	Battery Fault-Charger automatically disabled:	• Battery reversed. • High resistance in charger leads (leads too small, too long , poorly connected, open).See Section 5 for information on wire length and gauge. • Battery internal open circuit. • Battery voltage does not match charger voltage range • Defective Battery, replace with new battery

* Active only on five alarm models - see page 3 for model number breakdown

TROUBLESHOOTING GUIDE—REPEATED BLOWN AC FUSE

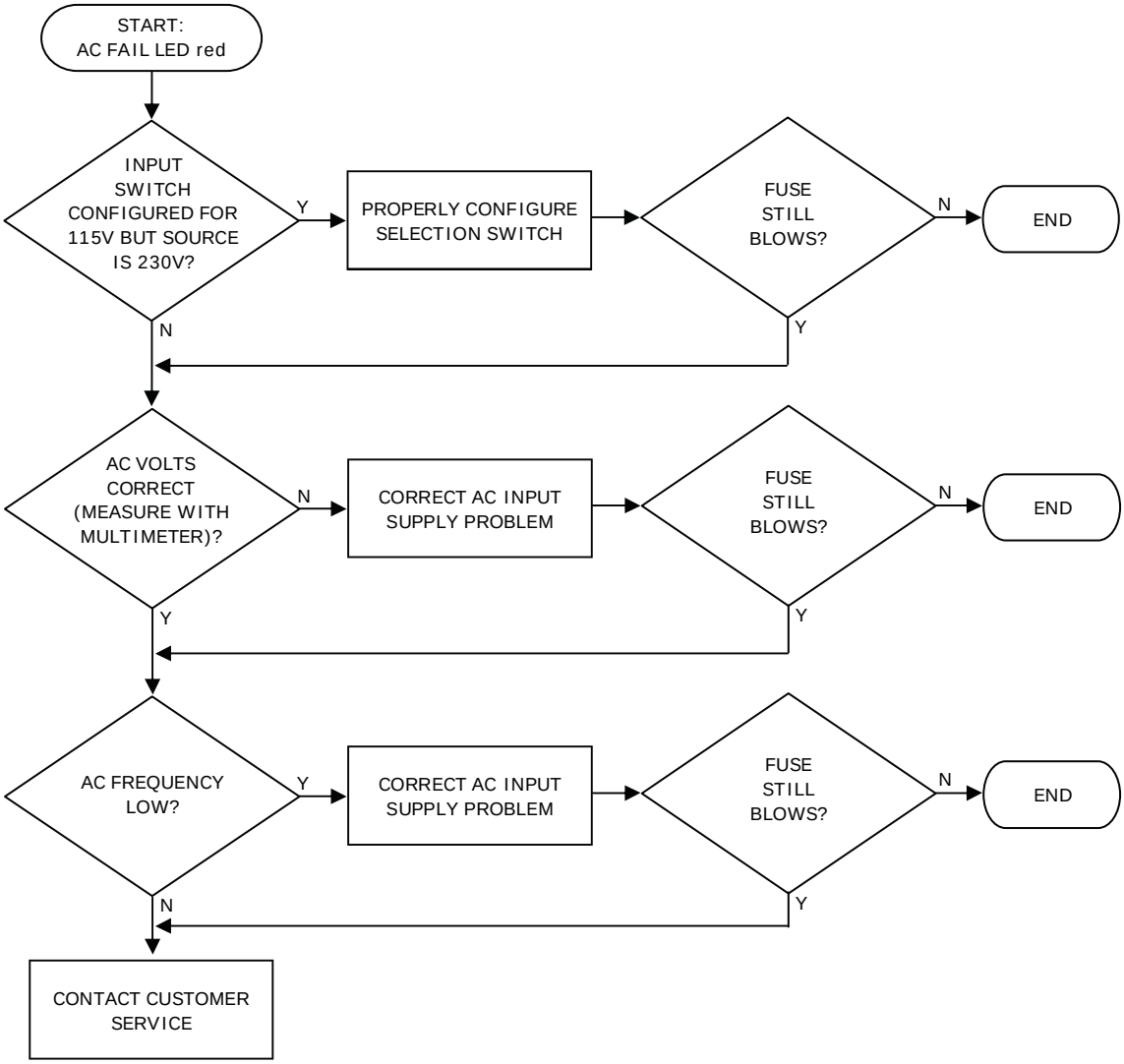

SERVICE HOTLINE: 1.800.742.2326
1.303.678.7500

TROUBLESHOOTING GUIDE—AC FAIL ALARM

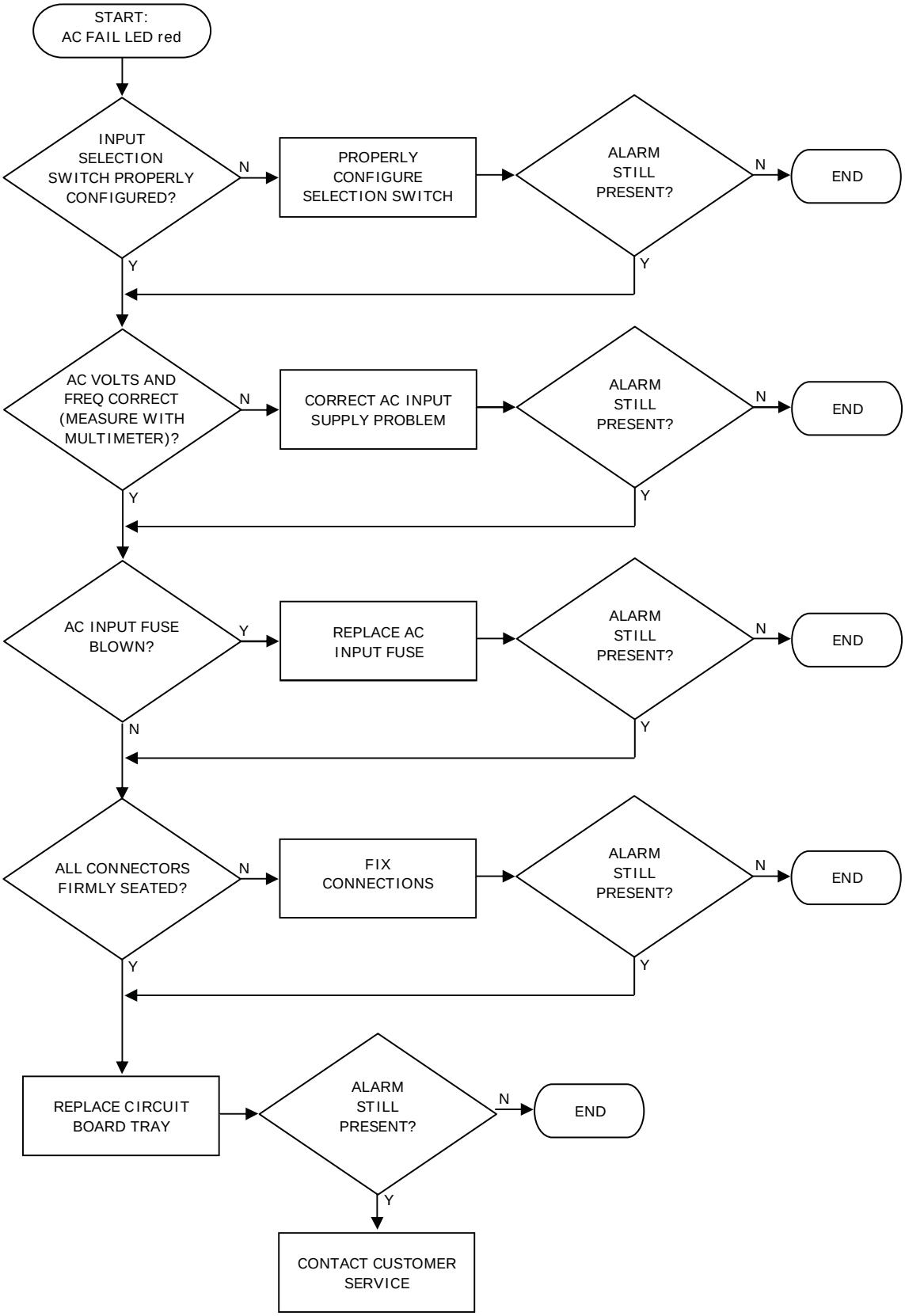

SERVICE HOTLINE: 1.800.742.2326
1.303.678.7500

TROUBLESHOOTING GUIDE—CHARGER FAIL ALARM

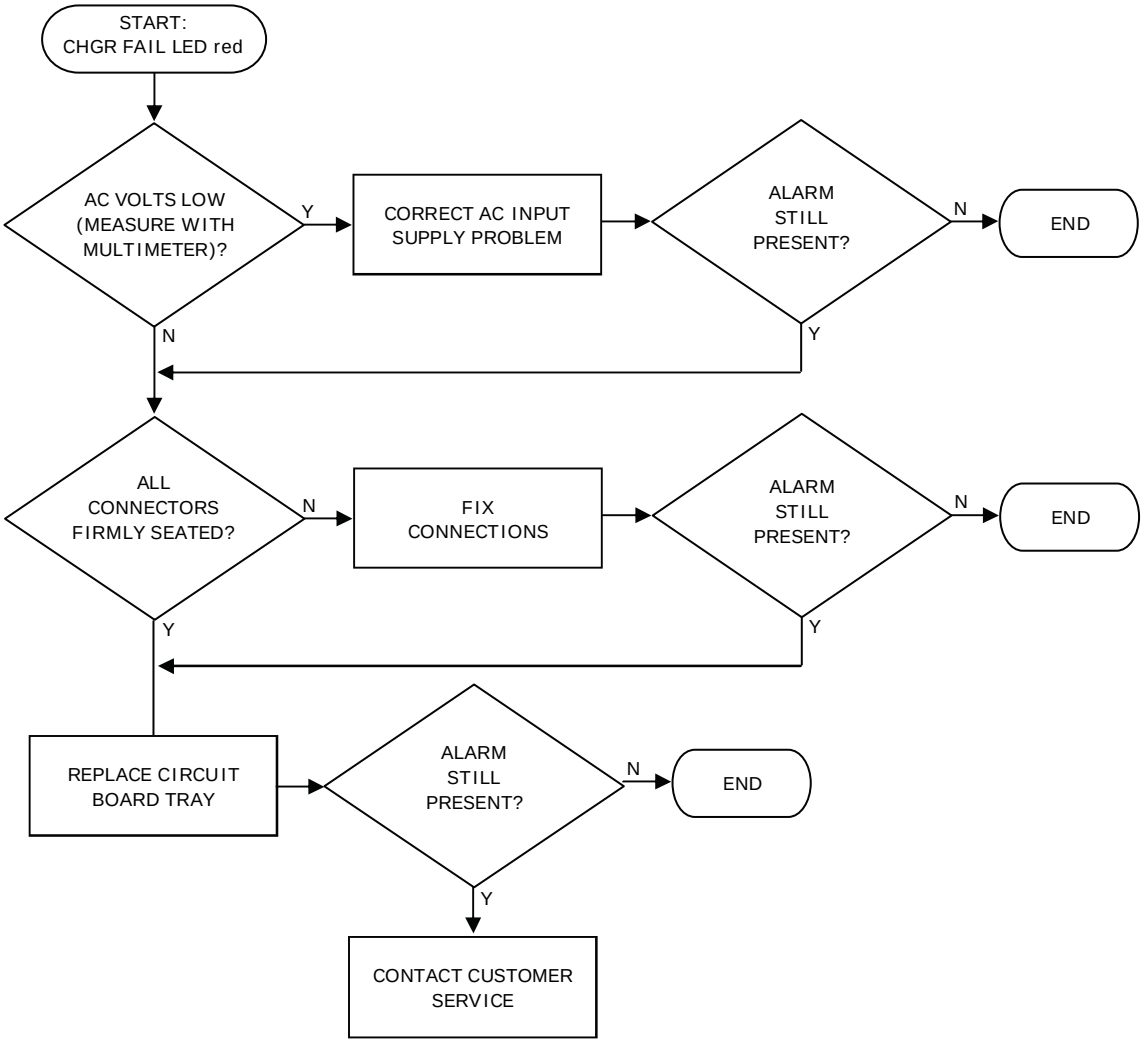

SERVICE HOTLINE: 1.800.742.2326
1.303.678.7500

TROUBLESHOOTING GUIDE—DC HIGH ALARM

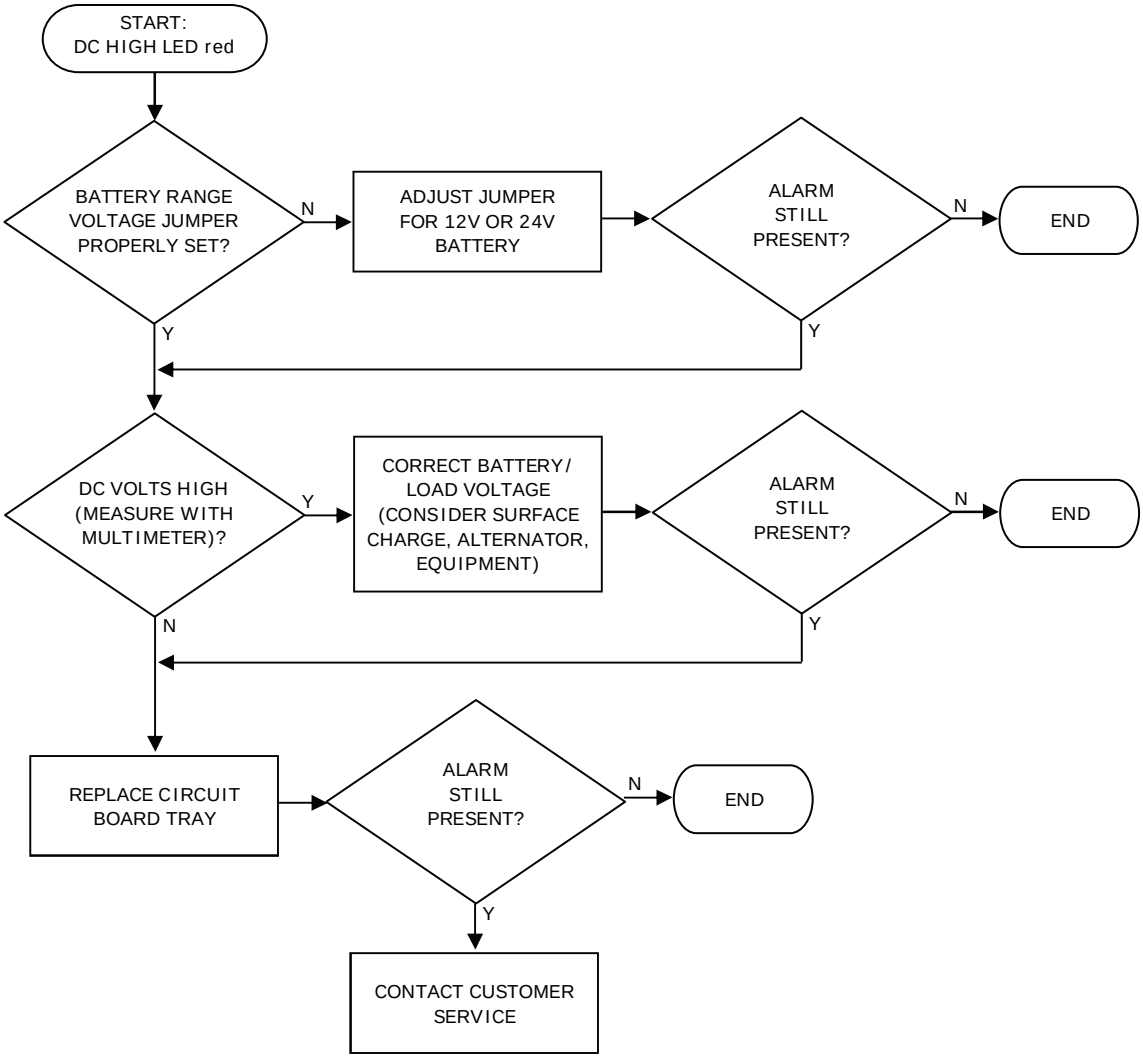

SERVICE HOTLINE: 1.800.742.2326
1.303.678.7500

TROUBLESHOOTING GUIDE—DC LOW ALARM

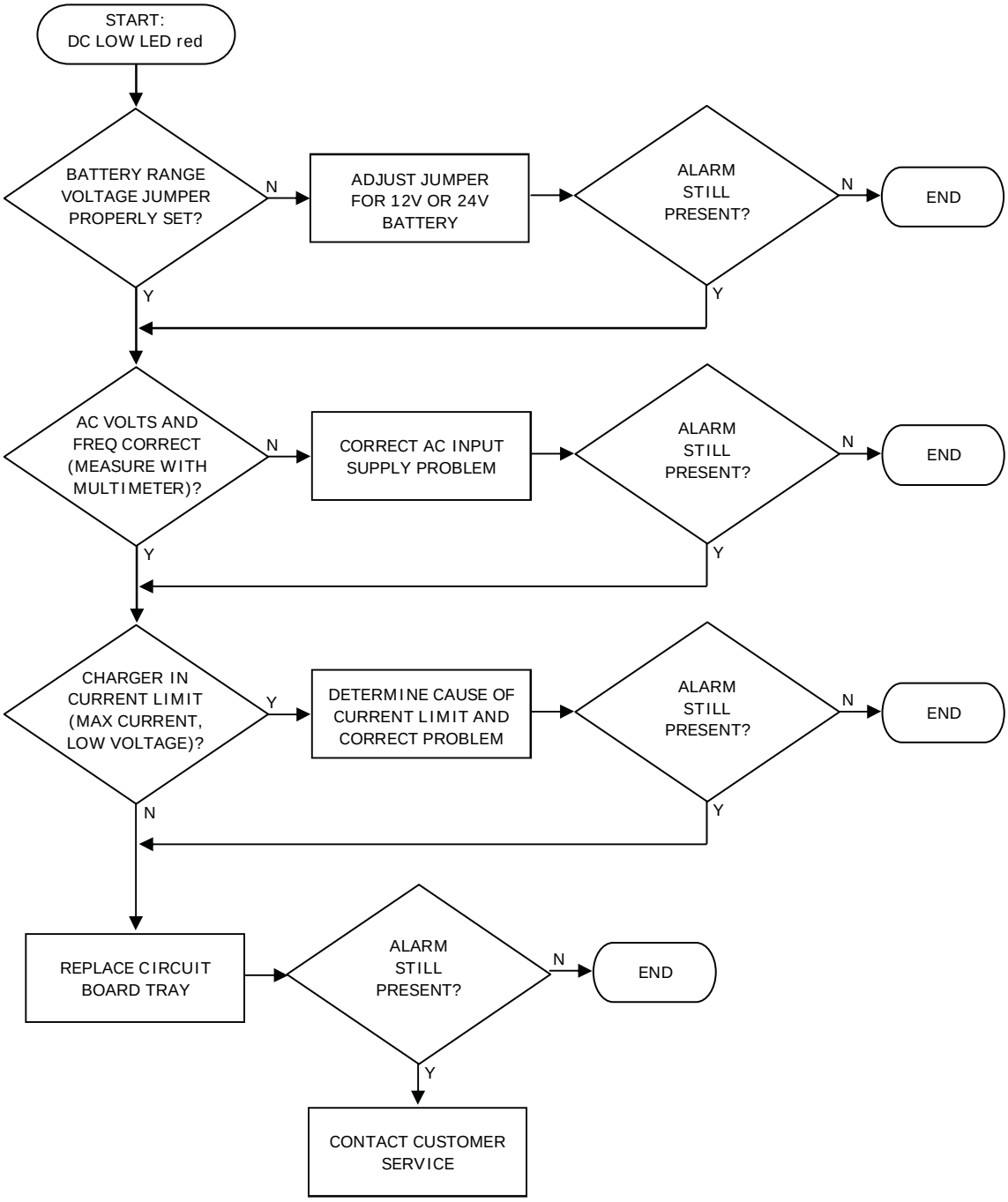

SERVICE HOTLINE: 1.800.742.2326
1.303.678.7500

TROUBLESHOOTING GUIDE—BATTERY FAULT ALARM

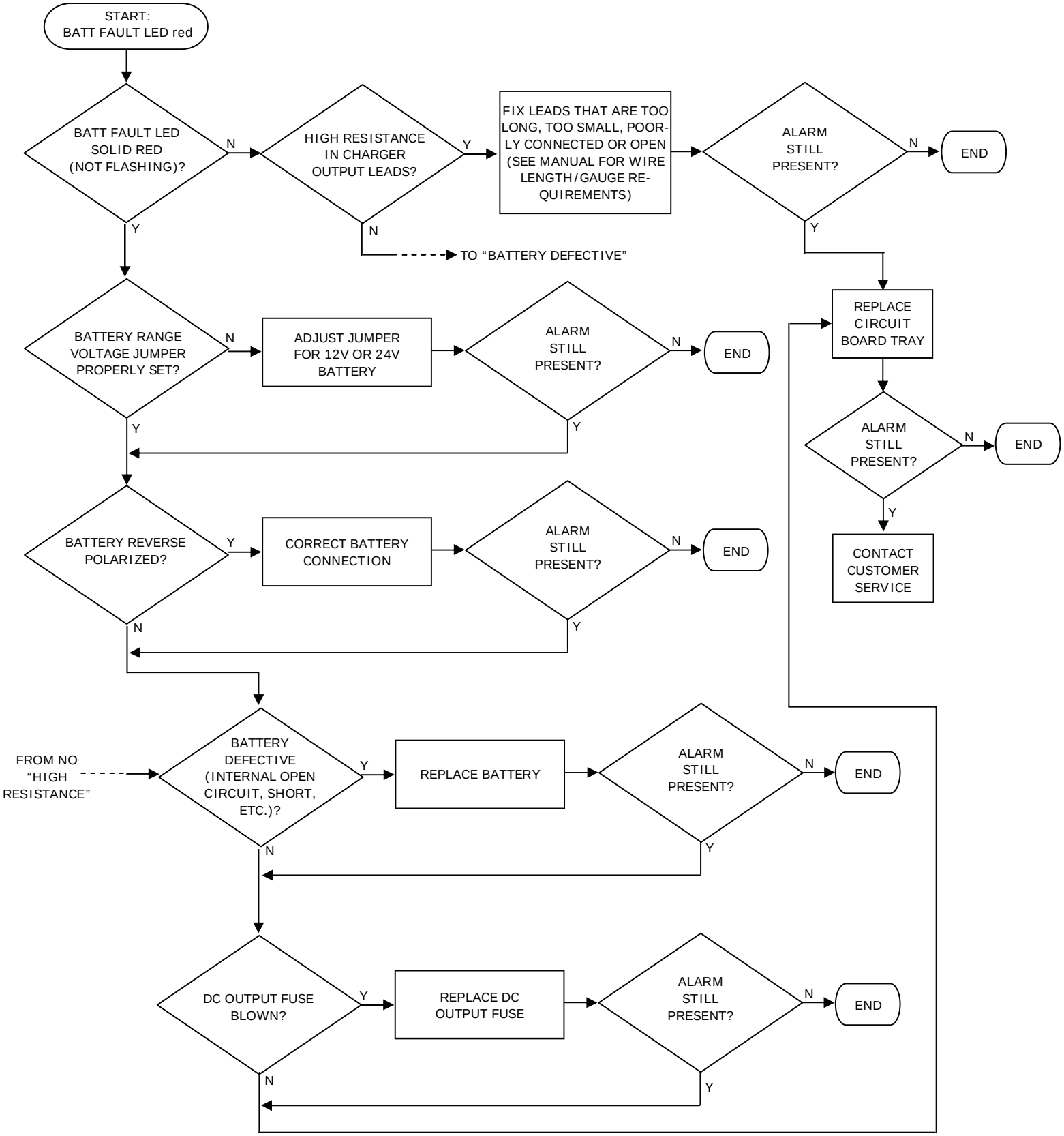

SERVICE HOTLINE: 1.800.742.2326
1.303.678.7500

NORMAL SET UP:

1. Apply AC power by closing the branch circuit breaker and any other disconnect devices.

2. The meter display should light immediately after power on. The green **AC/ ON** LED should be lighted. If a temperature sensor is present, either internal or remote, the green **T-COMP** (Temperature Compensation) LED should be lighted.

3. After a short delay (typically 10 seconds or less), the charger will produce output. If the meter display jumper is selected to read Volts or automatic Volts/Amps, the voltmeter reading should increase, indicating the battery is being charged.

4. If the meter display jumper is selected to read Amps or automatic Volts/Amps:
   - Current should be close to 10A if the battery requires recharging. If automatic boost is enabled, the **BOOST MODE** LED may light, in which case the battery will be charged until it reaches 106% of the float voltage. If boost is disabled, the green **FLOAT MODE** LED should be on and the battery will charge until it reaches the float voltage setting.
   - Output current will be low if the battery is fully charged, possibly too low to read on the meter. This is normal, provided the correct charging voltage is present. The green **FLOAT MODE** LED should light up when output current is below approximately 9.0 A (5A for single alarm).

C. ALARM DESCRIPTION, FIVE ALARM MODEL:

RELAY CONTACTS	BATTERY FAULT ALARM	AC FAIL ALARM	CHARGER FAIL ALARM	HIGH BATTERY ALARM (HI DC)	LOW BATTERY ALARM (LO DC)
COMMON	TB5-1 COM	TB5-4 COM	TB5-7 COM	TB5-10 COM	TB5-13 COM
OPEN ON ALARM	TB5-2 OK	TB5-5 OK	TB5-8 OK	TB5-11 OK	TB5-14 OK
CLOSE ON ALARM	TB5-3 FAIL Defaults to OK with no AC input	TB5-6 FAIL Defaults to Fail with no AC input	TB5-9 FAIL Defaults to OK with no AC input	TB5-12 FAIL Defaults to OK with no battery	TB5-15 FAIL Defaults to fail with no battery

D. ALARM DESCRIPTION, ONE ALARM MODEL:

RELAY CONTACTS	Not Used	* MASTER ALARM	Not Used	Not Used	Not Used
COMMON	TB5-1 No Connection	TB5-4 COM	TB5-7 No Connection	TB5-10 No Con-nection	TB5-13 No Con-nection
OPEN ON ALARM	TB5-2 No Connection	TB5-5 OK	TB5-8 No Connection	TB5-11 No Con-nection	TB5-14 No Con-nection
CLOSE ON ALARM	TB5-3 No Connection	TB5-6 FAIL Defaults to Fail with no AC input	TB5-9 No Connection	TB5-12 No Con-nection	TB5-15 No Con-nection

* The MASTER ALARM is a summary alarm. It will close on CHGR FAIL, AC FAIL or BATT FAULT.

SERVICE HOTLINE: 1.800.742.2326
1.303.678.7500

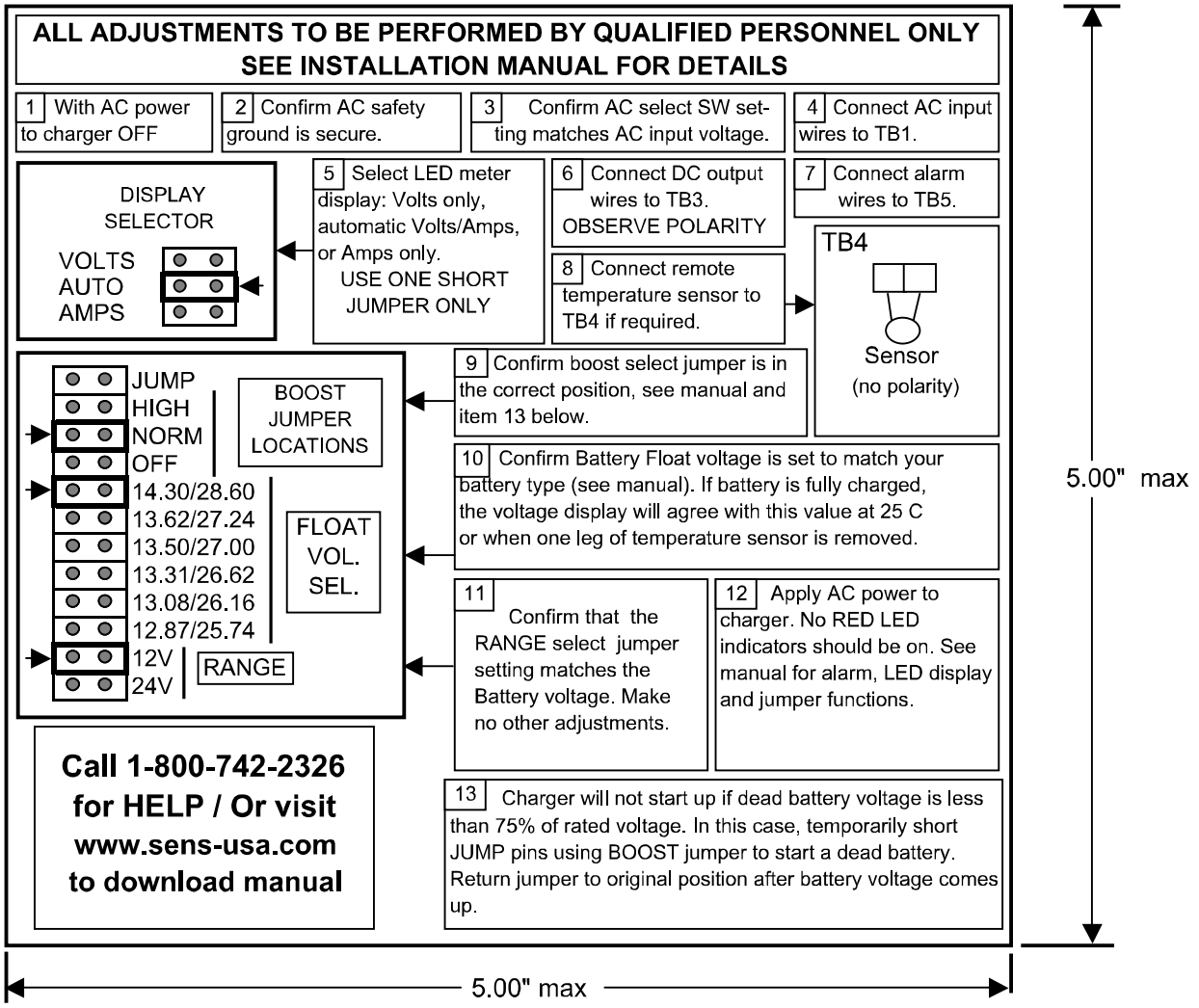

NOTES:

1. LETTERING TO BE BLACK INK ON SILVER FOIL LABEL, MATERIAL RATED PER R/C (PGDQ2). LABEL ADHESIVE PROVIDED MUST BE SUITABLE FOR USE ON ALUMINUM & RATED FOR 80 DEG C MINIMUM.
2. PSA MATERIAL IS TO BE PROVIDED WITH RELEASE LINER.
3. RADIUS CORNERS .125" MAXIMUM.
4. THIS DRAWING NOT TO SCALE.

SENS
Our energy means business

DCN No.	105963		
Drawn By:	HN	Date:	2/7/2011
Approved By:		Date:	
DWG Name:	LABEL, INSIDE COVER, NRG10/20		
PN: 808526	DWG REV.	E	

STOP!

Verify that all settings shown below are correct *before energizing charger*. CAUTION: Correct settings are essential to ensure proper battery performance and long battery life. *Before installation*, ensure adequate battery to charger wire gauge. Wire gauge that is too small may activate the open battery detector and the charger will shut down:

	Recommended Charger to Battery Distance (Ft.)			
AWG	12V/10A	24V/10A	12V/20A	24V/20A
10	10	19	N/A	N/A
8	15	30	7	15
6	24	48	12	24

For runs exceeding the above values, call SENS at 1-800-742-2326 or (303) 678-7500.

FACTORY SETTINGS

Charger is factory set for the following settings. Change the setting if needed for your battery or site conditions

Input:	**208-240 VAC**	
	120 VAC	
Jump:	**DISABLED**	
Fast charge:	**ENABLED / OFF**	
Float voltage:	**14.30**	**28.60**
	13.62	**27.24**
	13.50	**27.00**
	13.31	**26.62**
	13.08	**26.16**
	12.87	**25.74**
Voltage range:	**12-volt**	**24-volt**
	12/24 dual	

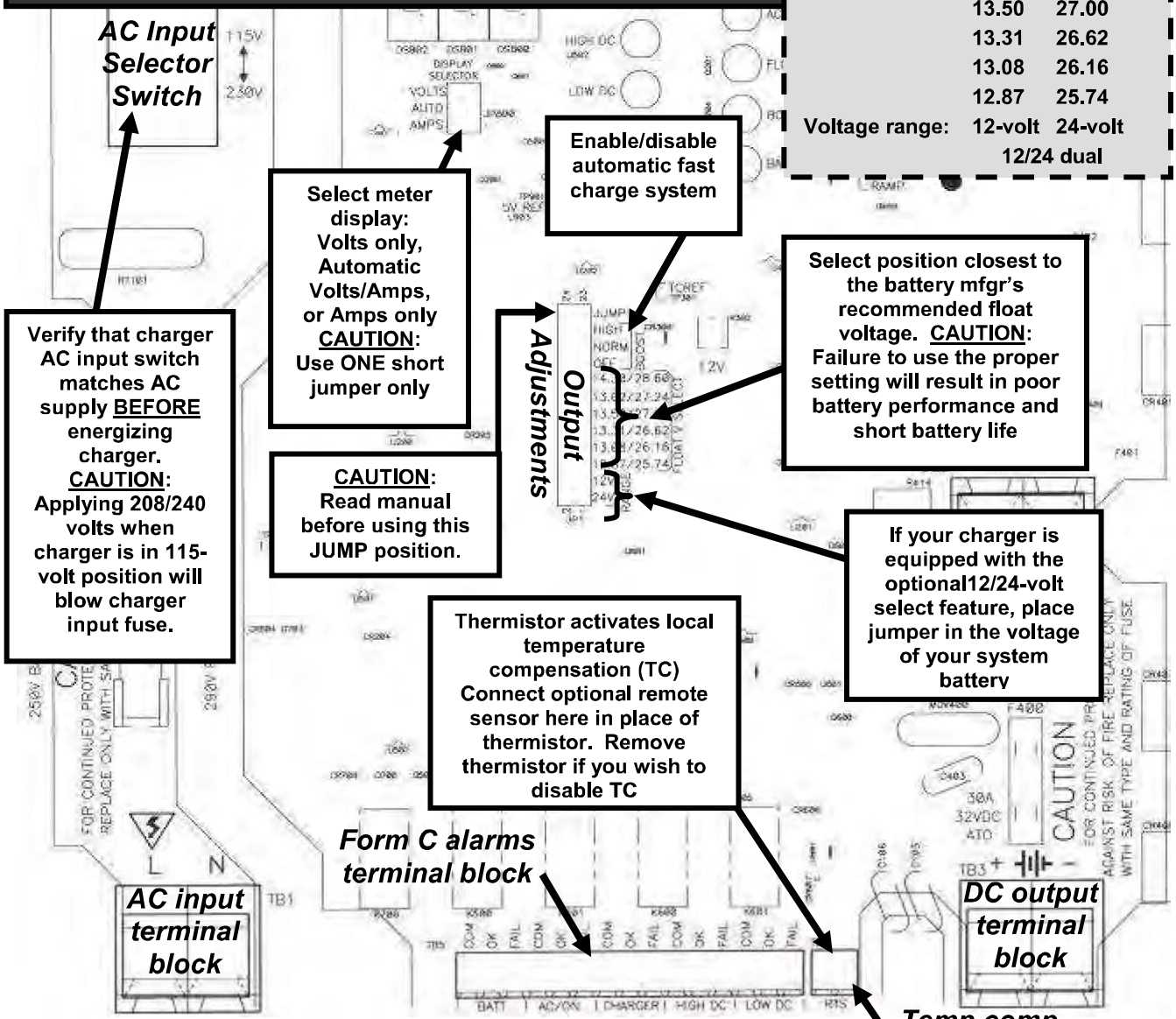

PN: 101294 REV: E Copyright © Stored Energy Systems LLC 2009

SENS Limited Warranty: NRG Series Battery Charger

What is covered?
This warranty covers any defect in material and workmanship on NRG model battery chargers manufactured by Stored Energy Systems, a Colorado Limited Liability Company (SENS).

What this warranty does not cover:
This warranty does not cover damages, defects or failures of your equipment resulting from shipping damage, accidents, installation errors, unauthorized adjustment or repair, unauthorized third-party service, failure to follow instructions, misuse, fire, flood, acts of persons not in our control, and acts of God.

For how long:
Three years from date of shipment, except magnetic parts and power semiconductors, which are covered for 10 years.

What we will do:
If your battery charger is defective within the warranty period, we will repair it or, at our option, replace it at no charge to you.

If we choose to replace your charger, we may replace it with a new or refurbished one of the same or similar design. The repair or replacement will be warranted for the remainder of the original warranty period. If we determine that your charger cannot be repaired or replaced, we will refund its purchase price to you.

What we ask you to do:
Contact SENS service department to obtain warranty service instructions. To obtain warranty service the product must be returned, freight prepaid, to the factory under a Return Material Authorization (RMA) number provided by SENS. If, in SENS' opinion, the problem can be rectified in the field, SENS may elect to ship replacement parts for customer installation instead of having the product returned to the factory.

Limitation:
This warranty is limited to defects in material or workmanship of the product. It does not cover loss of time, inconvenience, property damage or any consequential damages. Repair, replacement or refund of the purchase price of the equipment is your exclusive remedy.

Extended Warranty: NRG Series Battery Charger

Extended Warranty Period
At any time during the standard Limited Warranty period, customer may purchase extended warranty to lengthen the warranty period on the entire product to 5 or 10 years from date of original shipment. All other terms of SENS Limited Warranty (see above) apply.

Premium Warranty: NRG Series Battery Charger

Premium Warranty Coverage
At the time of original Product purchase, Customer may purchase premium warranty coverage for the standard warranty period or for extended periods of 5 or 10 years from date of original shipment. With premium warranty coverage, SENS will, if requested by Customer, pay reasonable and customary labor and mileage charges for the user to replace or repair the charger, limited to 100% of the Company's original net Product invoice amount, in the form of a credit toward future purchases of Product from the Company. All other terms of SENS Limited Warranty (see above) apply.

This Page Left Intentionally Blank

Drawings & Diagrams

This Page Left Intentionally Blank

REVISIONS				
ZONE	REV	DESCRIPTION	DATE	APPROVED

NOTES:

1. CUMMINS PCCNET NETWORK CABLE REQUIREMENTS: TWIN POWER CONDUCTORS, STRANDED TWISTED PAIR, SHIELDED NETWORK CABLE. CABLE SHIELD MUST BE GROUNDED AT ONE END. (BELDEN 9729, 24 AWG MINIMUM). TOTAL NETWORK LENGTH SHALL NOT EXCEED 4000 FEET. UP TO 20 NODES CAN BE CONNECTED TO THE NETWORK.
2. WIRE SIZES ARE INDICATIVE ONLY. CUSTOMER WIRE SIZE NEEDS TO BE DETERMINED BY OTHERS BASED ON CALCULATION AND VOLTAGE DROP. REFER TO TABLE 1 FOR SUGGESTED DC CONTROL WIRE SIZES AND CORRESPONDING RUN LENGTHS.
3. UNIVERSAL ANNUNCIATOR IS SUPPLIED LOOSE FOR INSTALLATION BY OTHERS.
4. INSTALL COMMUNICATION CABLE IN SEPARATE CONDUIT FOR PROPER OPERATION. NETWORK ERRORS WILL OCCUR IF NETWORK CABLE IS RUN IN THE SAME CONDUIT AS AC/DC POWER CABLE.
5. INSTALL AC CIRCUIT WIRE IN SEPARATE CONDUIT.
6. INSTALL DC CIRCUIT WIRE IN SEPARATE CONDUIT.
7. ALL CABLE CONDUCTORS AND WIRES MUST BE STRANDED PER NFPA 110, 2013 EDITION, CHAPTER 7, PARAGRAPH 7.12.4.1.

LEGEND:

FACTORY WIRING ———————

CUSTOMER / FIELD WIRING – – – – – – – – – – –

GENERATOR CONTROL

AUXILIARY ITEMS

GENERATOR/ATS ANNUNCIATOR

ATS ANNUNCIATOR

CONNECTION TERMINAL STRIP

TRANSFER SWITCH

TABLE 1
COMMON VDC WIRE RUNS

WIRE SIZE (AWG)	DISTANCE IN FEET ONE WAY
16	0 TO 1000
14	1600
12	2400
10	4000

UNLESS OTHERWISE SPECIFIED, ALL DIMS ARE IN INCHES

TOLERANCES:
FRACTIONAL: 1/4
.X: .06
.XX: .03
.XXX: .01
ANGLES: .5°

REFERENCES:
PCC 2.3
PCCNET ANNUNCIATOR
–

PREP. BY:	CHKD BY:	MODIFIED BY:
CR	DS	CR
02/18/14	02/18/14	01/05/15

FINISH: N/A

ENGINE FAMILY: –

Rocky Mountain
8211 E 96th AVE
HENDERSON, COLORADO 80640
PH: 303-287-0201
FAX: 303-287-4837

SITE NAME: –	CONTACT NAME: –	CUSTOMER PROJECT NO: –	TITLE: INTERCONNECT WIRING DIAGRAM
CONTRACTOR NAME: –	CONTACT NO: –	CRM PROJECT NO: –	SIZE B | DWG NO: S66511A-5 | REV: A
			SCALE: NONE | DO NOT SCALE | SHEET: 1 OF 2

THIS DRAWING CONTAINS INFORMATION THAT IS PROPRIETARY TO CRM, THIS INFORMATION IS TO BE HELD IN CONFIDENCE. NO DISCLOSURE OR OTHER USE OF THIS DRAWING IS TO BE MADE WITHOUT PRIOR WRITTEN CONSENT OF CRM.

REVISIONS				
ZONE	REV	DESCRIPTION	DATE	APPROVED

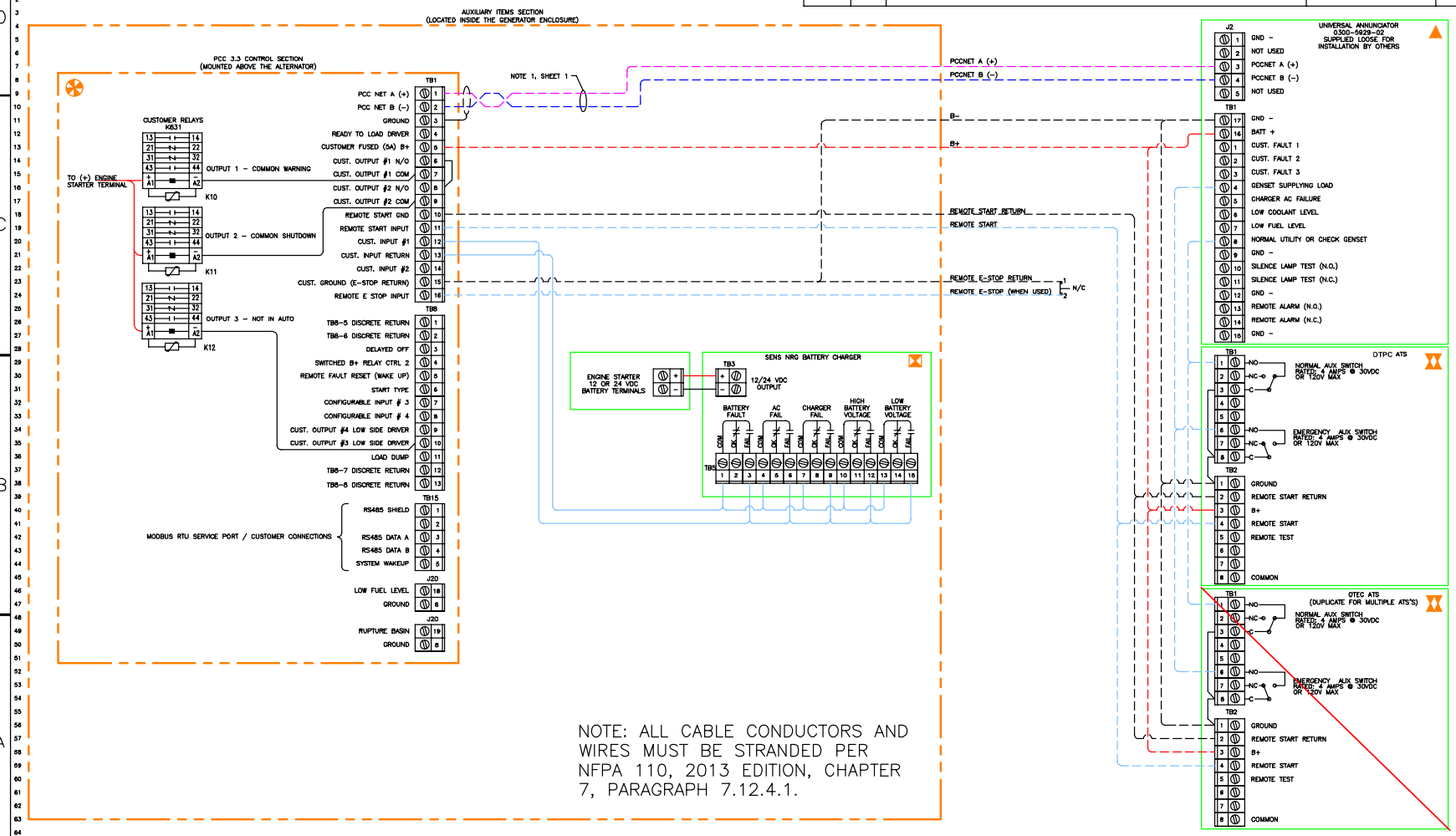

NOTE: ALL CABLE CONDUCTORS AND WIRES MUST BE STRANDED PER NFPA 110, 2013 EDITION, CHAPTER 7, PARAGRAPH 7.12.4.1.

UNLESS OTHERWISE SPECIFIED, ALL DIMS ARE IN INCHES

TOLERANCES:
FRACTIONAL: 1/4
.X: .06
.XX: .03
.XXX: .01
ANGLES: .5°

REFERENCES: –

FINISH: N/A

	PREP. BY:	CR	02/18/14
PCC 2.3	CHKD BY:	DS	02/18/14
PCCNET ANNUNCIATOR	MODIFIED BY:	CR	01/05/15
–			–

ENGINE FAMILY: –

Cummins Rocky Mountain
8211 E 96th AVE
HENDERSON, COLORADO 80640
PH: 303–287–0201
FAX: 303–287–4837

SITE NAME:	CONTACT NAME:	CUSTOMER PROJECT NO:	TITLE: INTERCONNECT WIRING DIAGRAM	
–	–	–		
CONTRACTOR NAME:	CONTACT NO:	CRM PROJECT NO:	SIZE: B	DWG NO: S66511A–5 REV: A
–	–	–	SCALE: NONE	DO NOT SCALE SHEET: 2 OF 2

THIS DRAWING CONTAINS INFORMATION THAT IS PROPRIETARY TO CRM, THIS INFORMATION IS TO BE HELD IN CONFIDENCE. NO DISCLOSURE OR OTHER USE OF THIS DRAWING IS TO BE MADE WITHOUT PRIOR WRITTEN CONSENT OF CRM.

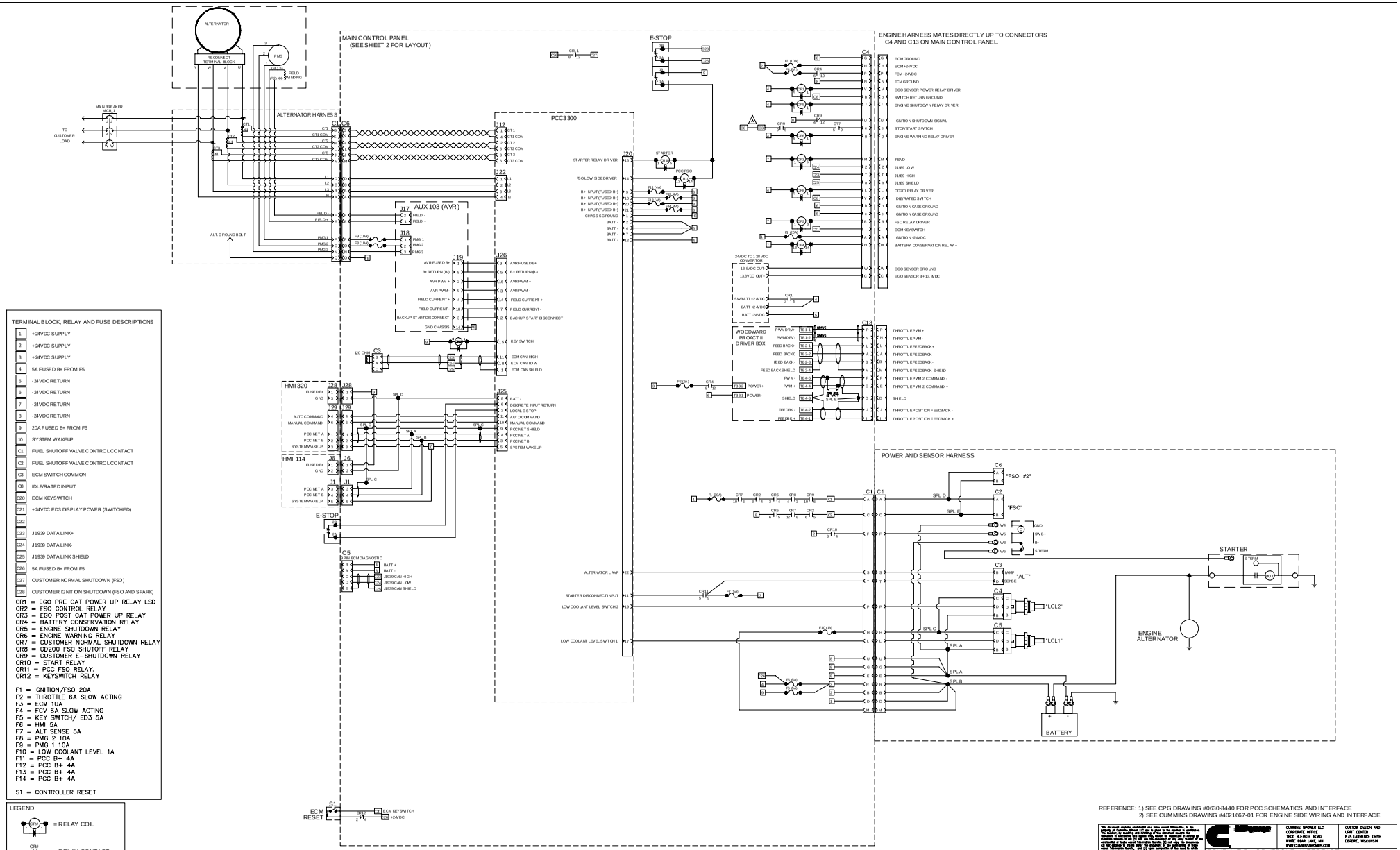

TERMINAL BLOCK, RELAY AND FUSE DESCRIPTIONS

1	+24VDC SUPPLY
2	+24VDC SUPPLY
3	+24VDC SUPPLY
4	5A FUSED B+ FROM F5
5	-24VDC RETURN
6	-24VDC RETURN
7	-24VDC RETURN
8	-24VDC RETURN
9	20A FUSED B+ FROM F6
10	SYSTEM WAKEUP
C1	FUEL SHUTOFF VALVE CONTROL CONTACT
C2	FUEL SHUTOFF VALVE CONTROL CONTACT
C3	ECM SWITCH COMMON
C8	IDLERATED INPUT
C20	ECM KEYSWITCH
C21	+24VDC ED3 DISPLAY POWER (SWITCHED)
C22	
C23	J1939 DATA LINK+
C24	J1939 DATA LINK-
C25	J1939 DATA LINK SHIELD
C26	5A FUSED B+ FROM F5
C27	CUSTOMER NORMAL SHUTDOWN (FSO)
C28	CUSTOMER IGNITION SHUTDOWN (FSO AND SPARK)

CR1 = EGO PRE CAT POWER UP RELAY LSD
CR2 = FSO CONTROL RELAY
CR3 = EGO POST CAT POWER UP RELAY
CR4 = BATTERY CONSERVATION RELAY
CR5 = ENGINE SHUTDOWN RELAY
CR6 = ENGINE WARNING RELAY
CR7 = CUSTOMER NORMAL SHUTDOWN RELAY
CR8 = CD200 FSO SHUTOFF RELAY
CR9 = CUSTOMER E-SHUTDOWN RELAY
CR10 = START RELAY
CR11 = PCC FSO RELAY.
CR12 = KEYSWITCH RELAY

F1 = IGNITION/FSO 20A
F2 = THROTTLE 6A SLOW ACTING
F3 = ECM 10A
F4 = FCV 6A SLOW ACTING
F5 = KEY SWITCH/ ED3 5A
F6 = HMI 5A
F7 = ALT SENSE 5A
F8 = PMG 2 10A
F9 = PMG 1 10A
F10 = LOW COOLANT LEVEL 1A
F11 = PCC B+ 4A
F12 = PCC B+ 4A
F13 = PCC B+ 4A
F14 = PCC B+ 4A

S1 = CONTROLLER RESET

LEGEND

= RELAY COIL

= RELAY CONTACT

= TERMINAL BLOCK

REFERENCE: 1) SEE CPG DRAWING #0630-3440 FOR PCC SCHEMATICS AND INTERFACE
2) SEE CUMMINS DRAWING #4021667-01 FOR ENGINE SIDE WIRING AND INTERFACE

REV	ECO	DESCRIPTION OF REVISION	BY	DATE
A	2013-721	REMOVED C7. ADDED SHEET 3, ADDED JUMPER BETWEEN TERMINALS C3 & C8.	KAK	25NOV2013

CUMMINS NPOWER LLC
CORPORATE OFFICE
1600 BLEDSOE ROAD
WHITE BEAR LAKE, MN
WWW.CUMMINSNPOWER.COM

CUSTOM DESIGN AND LIMIT CENTER
875 LAWRENCE DRIVE
DEPERE, WISCONSIN

SCHEMATIC, CONTROLS INTERFACE
KTA19SLB w/ PCC3300

UNLESS OTHERWISE SPECIFIED ALL DIMENSION TOLERANCES ARE:
ANGULAR DIMENSIONS ± 1°
THIRD ANGLE PROJECTION
IMPERIAL UNITS
METRIC UNITS

DWG UNITS: INCH/LB/S
DRAWN BY: KAK
DATE: 23 AUG 2011
AUTO CAD
INT ECO:
SCALE:
EST WEIGHT:
SHEET 1OF3
DRAWING NO: GFEB-PCC3.3-WIRING

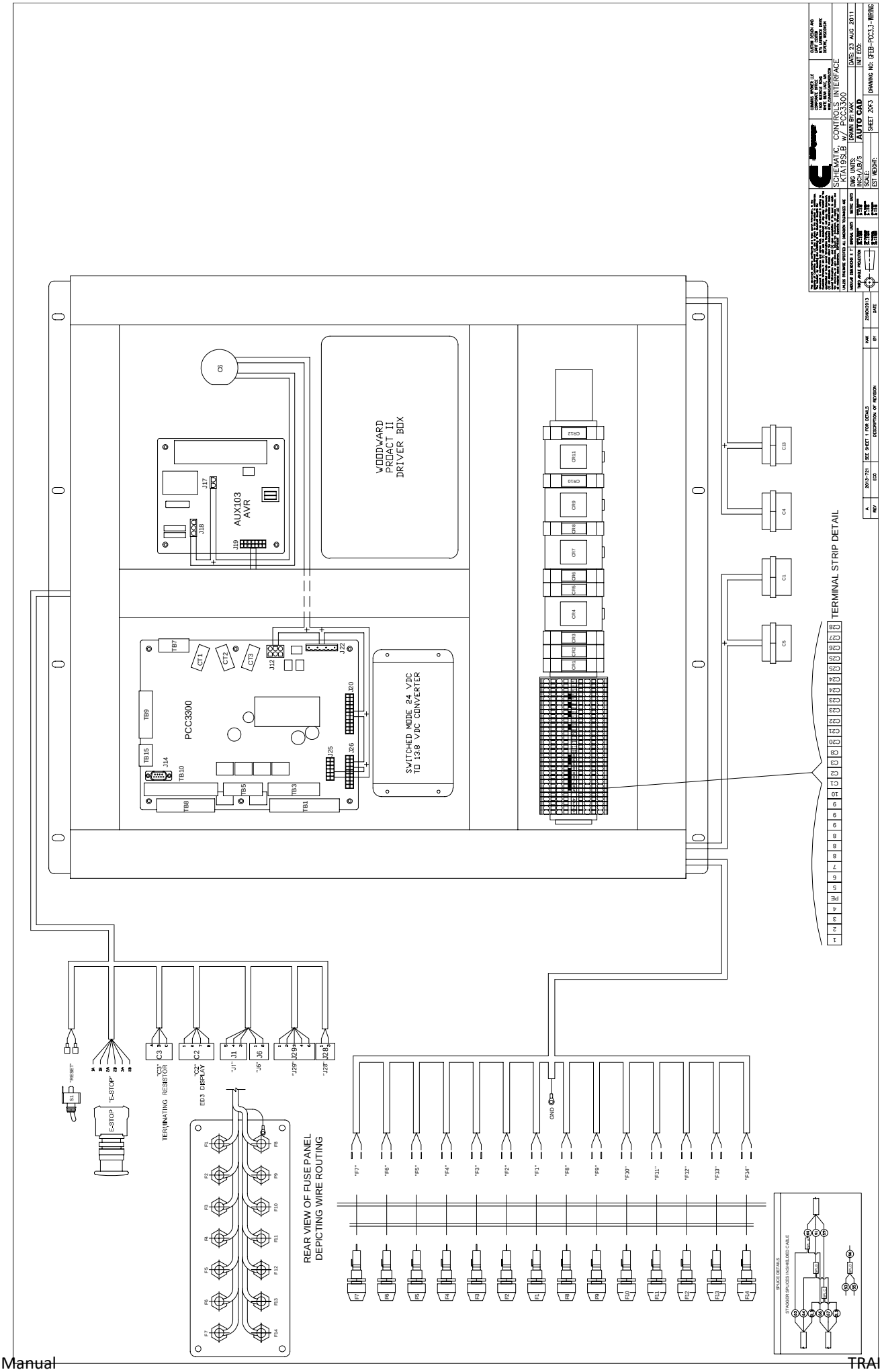
WOODWARD
PROACT II
DRIVER BOX
AUX103
AVR
PCC3300
SWITCHED MODE 24 VDC
TO 13.8 VDC CONVERTER
TERMINAL STRIP DETAIL
REAR VIEW OF FUSE PANEL
DEPICTING WIRE ROUTING
TERMINATING RESISTOR
ED3 DISPLAY
E-STOP
"RESET"
"E-STOP"
"C3"
"C2"
"J1"
"J6"
"J29"
"J28"
GND
SPLICE DETAILS
STAGGER SPLICES IN SHIELDED CABLE
SCHEMATIC, CONTROLS INTERFACE
KTA19SLB w/ PCC3300
DWG UNITS:
INCH/LB/S
DRAWN BY: KAK
AUTO CAD
SHEET 2 OF 3
DATE: 23 AUG 2011
INT ECO:
DRAWING NO: GFEB-PCC3.3-WIRING
Page 1576 of 1859

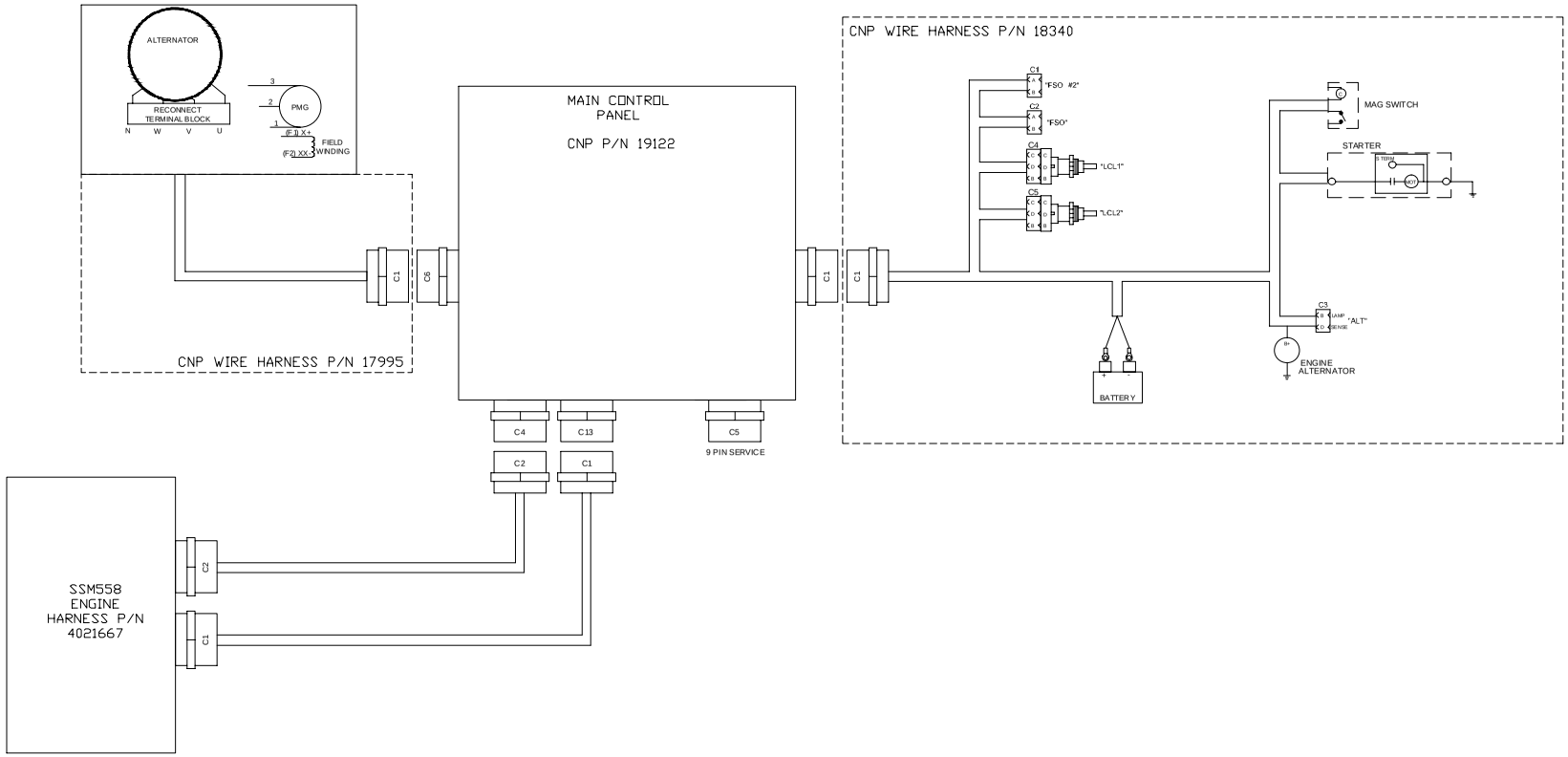

REV	ECO	DESCRIPTION OF REVISION	BY	DATE
A	2013-721	SEE SHEET 1 FOR DETAILS	KAK	25NOV2013

CUMMINS NPOWER LLC
CORPORATE OFFICE
1600 BUSINESS ROAD
WHITE BEAR LAKE, MN
WWW.CUMMINSNPOWER.COM

CUSTOM DESIGN AND LIMIT CENTER
875 LAWRENCE DRIVE
DE PERE, WISCONSIN

SCHEMATIC, CONTROLS INTERFACE
KTA19SLB W/ PCC3300

DWG UNITS: INCH/LB/S
SCALE:
EST WEIGHT:

DRAWN BY: KAK
DATE: 23 AUG 2011
AUTO CAD
INT ECO:
SHEET 30F3
DRAWING NO: QFEB-PCC3.3-WIRING

ALL DIMENSIONS IN INCHES

ZONE	REV	REVISIONS DESCRIPTION	DATE	APPROVED

THIS DOCUMENT IS THE PROPERTY OF DME INC. AND CAN NOT BE DISTRIBUTED WITHOUT DME'S AUTHORIZATION

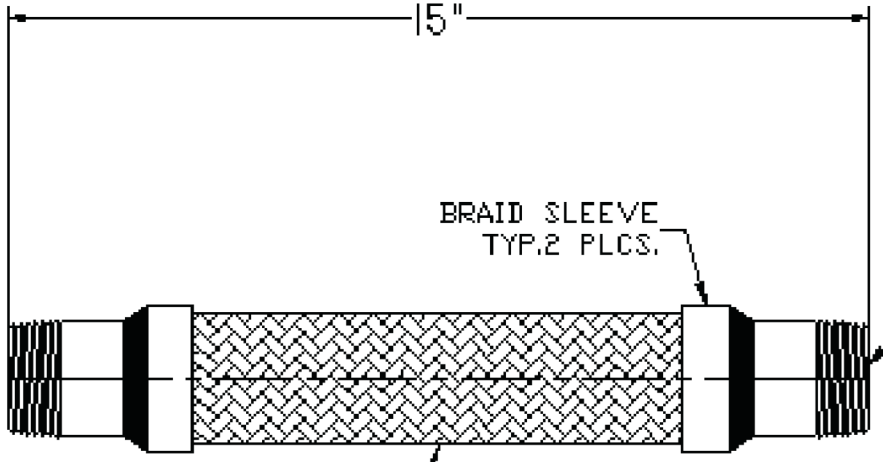

WORKING PRESSURE @ 70°F - 500 PSIG
BURST PRESSURE @ 70°F - 2000 PSIG

SUPPLIED LOOSE FOR INSTALLATION BY OTHERS. MISCELLENEOUS FITTINGS, PIPE, HOSE, PRESSURE REGULATORS, PRESSURE GAUGES, AND FILTERS FROM THE NATURAL GAS SOURCE TO THE GENERATOR SHALL BE SUPPLIED AND INSTALLED BY OTHERS.

ITEM	QTY	DESCRIPTION	MATERIAL

BILL OF MATERIAL

UNLESS OTHERWISE SPECIFIED TOLERANCES ARE :

.XXX ± .010"
.XX ± .030"
.X ± .060"
ANGLES ± 1/2"

FRACTIONS: ± 1/8"
EXPANSION JOINT OAL: ± 1/8"

CUST: CUMMINS GREAT LAKES
JOB#

DESIGN SM 10-9-01
APPROVED BY: SM 10-9-01
DWG: P.K. 10-9-01

DME INCORPORATED
[redacted] AVE, SANTA FE SPRINGS, CA 90670
TEL: (562) 921 - 0404
FAX: (562) 802 - 7439

MM SERIES BRAIDED HOSE ASSEMBLY

SIZE | DWG NO. MM | REV
SCALE NONE | DATE 10-9-01 | SHEET

149-0751

MICROFILMED

ER NO	LET	NO	REVISION	ENG	CKR	DATE
	SUP		SD'S 149P751 W/CHGS-OLD DWG DTD			2-10-59
	A		NOTE 3 WAS 30 OR 40 MESH	TJA	CP	10-24-73
	A		"W/LINER" REMOVED	TJA	WB	1-9-74
	A		WAS 40 MESH, 1/64 OPEN, .010 WIRE	TJA	WB	3-25-74
	A		ADDED NOTE 3-B	TJA	HP	10-31-77
73329	B	1	REVISED NOTES 3 & 3A	WS	BG	9-4-96

SUPPLIED LOOSE FOR INSTALLATION BY OTHERS.
2" NPT INLET/OUTLET

V.O. DRAWING

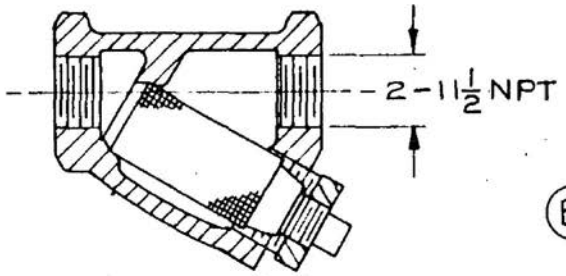

B1 A

NOTES:

1. 2" PIPE SIZE
2. MATL-CAST SEMI-STEEL BODY
3. 20 MONEL WIRE MESH
   A. 20 MESH: .033 OPENING
   B. ALTN MATL: STAINLESS STEEL WIRE MESH
4. SELF CLEANING
5. FOR USE WITH NATURAL GAS

		SEPIA FROM 149A558	ITEM	PART NO.				DWG SIZE	QTY	* BULK	DESCRIPTION OR MATERIAL		
NEXT ASSY	SIMILAR TO	DR JER		relay	price	tp	bur(2)	me	Onan		DIVISION OF STUDEBAKER CORPORATION Minneapolis, Minnesota		
TOLERANCES UNLESS OTHERWISE SPECIFIED		CKR CP		weld	sa	hsg	gd	qc					
FRACTIONS ±	DECIMALS	ENGR WW		src	punch	crank	ck	po			STRAINER		
ANGLES . . . ±	2 PLACE ±	SAMP REL	DATE 2-12-71				sc ~						
HOLES . . . + .006 − .002	3 PLACE ±	PROD REL WW 2-18-71	MODEL						DWG NO. 149-0751			DWG SIZE A	
The proprietary design information on this print is owned by the Onan Division of Studebaker Corporation and the use of this print is not extended to others.		PROD REL											

FORM RE023

ENGINE SERVICE CONNECTIONS

GAS INLET ----------2.00" NPT
ENGINE WATER IN ----------3.50" O.D.
ENGINE WATER OUT ---------3.00" O.D.
DE-AERATION ----------1/4" NPT
MAG PICK-UP ----------5/8-18 UNF
OIL DRAIN PLUG ---1_1/16-12 UN-2B ORING
EXHAUST STACK ----------5.00" 125#/150# ANSI FLANGE
AFTERCOOLER WATER IN ------1.25" O.D.
AFTERCOOLER WATER OUT -----1.25" O.D.
EXH TEMP COUPLING ---------1/4" NPT

FLUID CAPACITIES

ENGINE OIL ----------16 GAL △
ENGINE COOLANT ----------32 QTS
AFTERCOOLER COOLANT --------4 QTS
RAD JACKET WATER ----------12.20 GAL
RAD AFTERCOOLER ----------11.42 GAL

SERVICE NOTES

10.00 REQUIRED TO REMOVE OIL PAN
15.00 REQUIRED TO REMOVE OIL DIPSTICK
1.81 REQUIRED TO REMOVE OIL FILTER

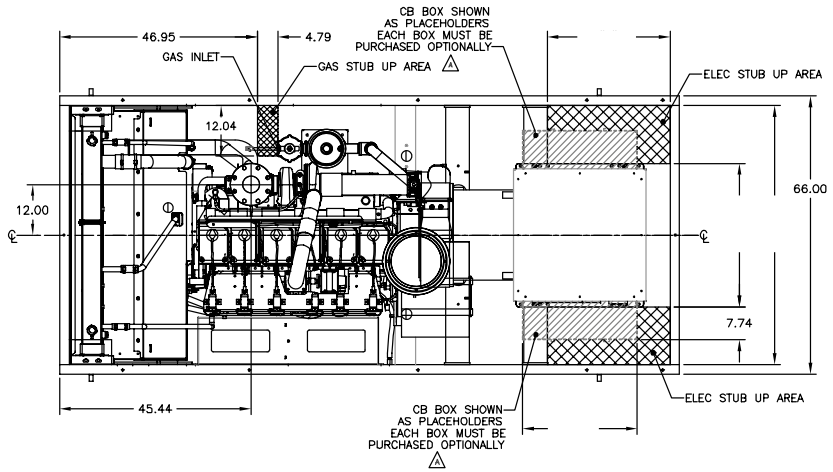

GENERATOR FRAME SIZE	DIM* "A"	DIM "B"	DIM "C"	DIM "D"	DIM "E"	TOTAL WEIGHT* (WET) LBS/KG
NEWAGE UCI274 K	62.21	29.00	132.34	63.26	32.75	8840/4010
NEWAGE HCI434 C	63.68	28.79	138.84	61.48	29.13	9127/4140
NEWAGE HCI434 D	64.59	28.67	138.84	61.48	29.13	9298/4218
NEWAGE HCI434 E	65.57	28.55	138.84	61.48	29.13	9482/4301
NEWAGE HCI434 F	66.97	28.37	138.84	61.48	29.13	9759/4427
NEWAGE HCI534 C	68.73	28.15	141.71	59.91	24.88	10140/4600
NEWAGE HCI534 D	68.73	28.15	141.71	59.91	24.89	10429/4730

*SEE NOTES 1 AND 2

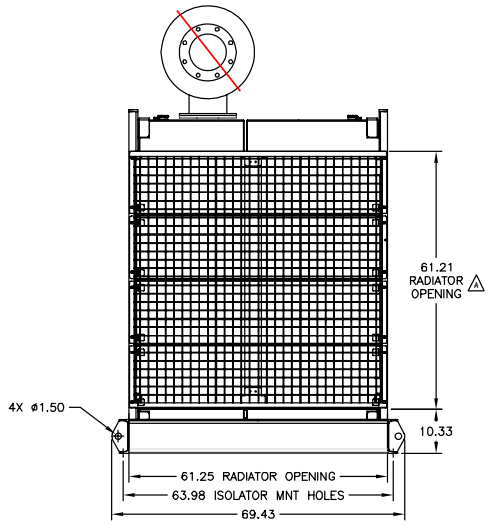

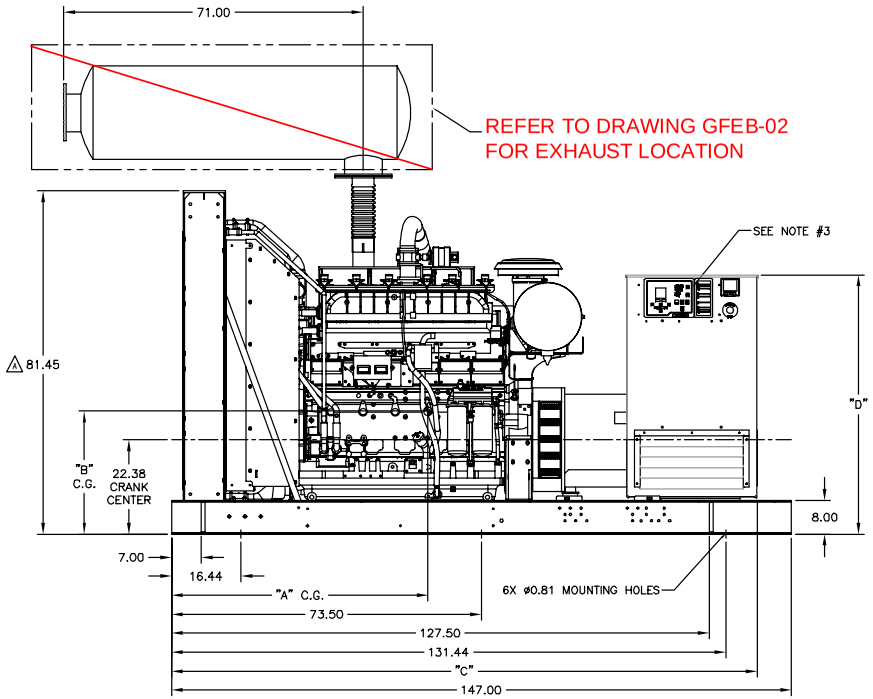

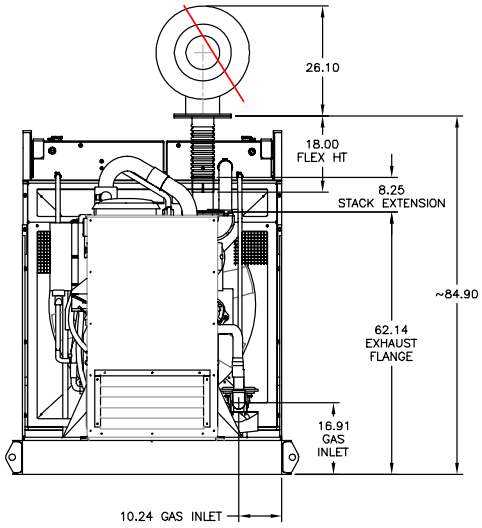

NOTES
1. ALL WEIGHTS AND DIMENSIONS ARE APPROXIMATE
2. WEIGHTS DO NOT INCLUDE SILENCER, BATTERIES OR OPTIONAL EQUIPMENT.
3. CONTROLLER CAN BE MOUNTED ON EITHER SIDE
4. REQUIRES USE OF SPREADER BAR WHEN LIFTING TO PREVENT DAMAGE TO UNIT.
5. GENSETS HAVE INTEGRAL ISOLATION

REV	ECO	DESCRIPTION OF REVISION	BY	DATE
A	2013-216	ADDED CB PNL ZONES & NOTES; OIL CAPACITY: 16 GALLONS WAS 26 81.45 WAS 79.38; 61.21 WAS 59.39	DJH	16APR2013

CUMMINS NPOWER LLC CORPORATE OFFICE 1600 INCENTIVE ROAD WHITE BEAR LAKE, MN WWW.CUMMINSNPOWER.COM
CUSTOM DESIGN AND UPFIT CENTER 875 LAWRENCE DRIVE DE PERE, WISCONSIN

UNLESS OTHERWISE SPECIFIED ALL DIMENSION TOLERANCES ARE: ANGULAR DIMENSIONS ± 1° | IMPERIAL UNITS | METRIC UNITS | THIRD ANGLE PROJECTION

ASSY,GENSET,OPEN,KTA19SLB
RADIATOR COOLED

DWG UNITS: INCH/LB/S | SCALED N/A | EST WEIGHT:N/A
DRAWN BY:GVD | AUTO CAD | SHEET 1OF1
DATE: 27MAY2010 | INIT ECD - | DRAWING NO GFEB-01

ENGINE SERVICE CONNECTIONS

GAS INLET ----------2.00" NPT
ENGINE WATER IN ----------3.50" O.D.
ENGINE WATER OUT ---------3.00" O.D.
DE-AERATION ----------1/4" NPT
MAG PICK-UP ----------5/8-18 UNF
OIL DRAIN PLUG ---1_1/16-12 UN-2B ORING
EXHAUST STACK ----------5.00" 125#/150# ANSI FLANGE
AFTERCOOLER WATER IN -------1.25" O.D.
AFTERCOOLER WATER OUT ------1.25" O.D.
EXH TEMP COUPLING ---------1/4" NPT

FLUID CAPACITIES

ENGINE OIL ----------16 GAL △
ENGINE COOLANT ----------32 QTS
AFTERCOOLER COOLANT --------4 QTS
RAD JACKET WATER ----------12.20 GAL
RAD AFTERCOOLER ----------11.42 GAL

SERVICE NOTES

10.00 REQUIRED TO REMOVE OIL PAN
15.00 REQUIRED TO REMOVE OIL DIPSTICK
1.81 REQUIRED TO REMOVE OIL FILTER

GENERATOR FRAME SIZE	DIM* "A"	DIM "B"	DIM "C"	DIM "D"	DIM "E"	TOTAL WEIGHT* (WET) LBS/KG
NEWAGE UCI274 K	62.21	29.00	132.34	63.26	32.75	10740/4872
NEWAGE HCI434 C	63.68	28.79	138.84	61.48	29.13	11027/5002
NEWAGE HCI434 D	64.59	28.67	138.84	61.48	29.13	11198/5080
NEWAGE HCI434 E	65.57	28.55	138.84	61.48	29.13	11382/5163
NEWAGE HCI434 F	66.97	28.37	138.84	61.48	29.13	11659/5289
NEWAGE HCI534 C	66.73	28.15	141.71	59.91	24.89	12040/5462
NEWAGE HCI534 D	68.73	28.15	141.71	59.91	24.89	12329/5592

*SEE NOTES 7, 8 AND 9

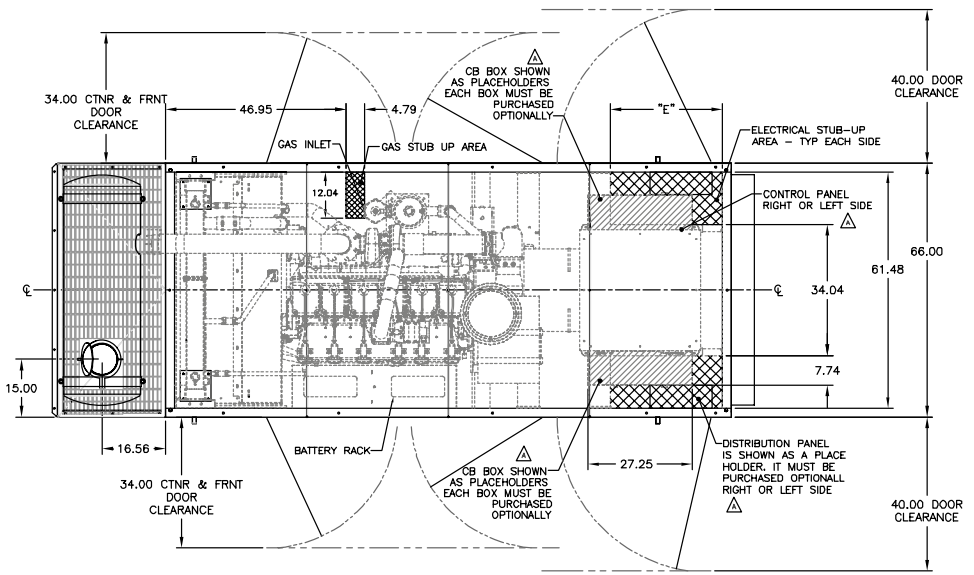

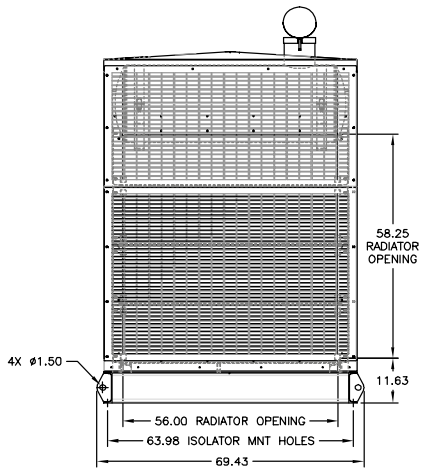

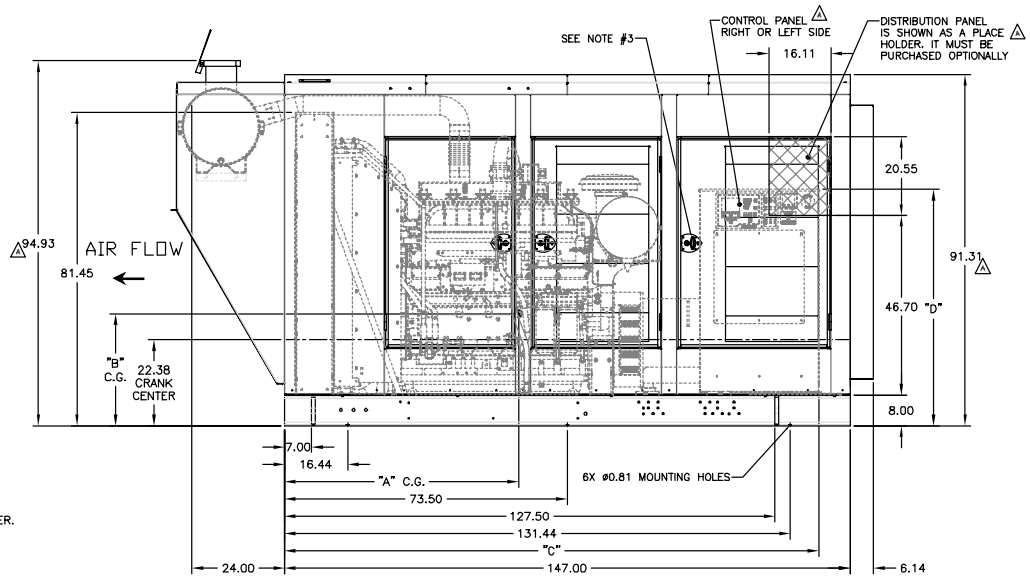

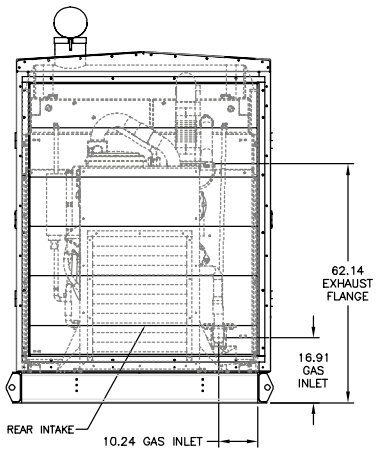

NOTES:
1. ENCLOSURE IS TO BE PAINTED ONAN GREEN UNLESS OTHERWISE NOTED ON ORDER.
2. ALL HARDWARE TO BE STAINLESS STEEL
3. ALL DOORS KEYED ALIKE.
4. STAINLESS STEEL LIFT-OFF DOOR HINGES
5. FOLDING T-HANDLE COMPOSITE DOOR LATCH
6. ENCLOSURE IS 14 GAUGE.
7. ALL WEIGHTS AND DIMENSIONS ARE APPROXIMATE
8. WEIGHTS DO NOT INCLUDE BATTERIES OR OPTIONAL EQUIPMENT.
9. WEIGHTS INCLUDE STANDARD CRITICAL GRADE EXHAUST. FOR HOSPITAL GRADE EXHAUST ADD 400 LBS/182 KG.
10. CONTROLLER CAN BE MOUNTED ON EITHER SIDE OF CABINET.
11. REQUIRES USE OF SPREADER BAR WHEN LIFTING TO PREVENT DAMAGE TO UNIT.
12. GENSET DOES NOT INCLUDE FLOOR. CONTACT FACTORY FOR PRICING.
13. GENSETS HAVE INTEGRAL ISOLATION

REV	ECO	DESCRIPTION OF REVISION	BY	DATE
A	2013-193	UPDATED ENCL HEIGHT & EXHAUST; ADDED CB/DIST PNL ZONES & NOTES; OIL CAPACITY: 16 GALLONS WAS 26	DJH	11APR2013

UNLESS OTHERWISE SPECIFIED ALL DIMENSION TOLERANCES ARE
ANGULAR DIMENSIONS ± 1° | IMPERIAL UNITS | METRIC UNITS
THIRD ANGLE PROJECTION

CUMMINS NPOWER LLC CORPORATE OFFICE 1600 INCENTIVE ROAD WHITE BEAR LAKE, MN WWW.CUMMINSNPOWER.COM

CUSTOM DESIGN AND UNIT CENTER 875 LAWRENCE DRIVE DE PERE, WISCONSIN

ASSY,GENSET,KTA19SLE
STD ENCL,INT SILENCER

DWG UNITS: INCH/LB/S | DRAWN BY:GVD | DATE: 09JUL2010
SCALE N/A | EST WEIGHT:N/A | SHEET 1OF1 | DRAWING NO GFEB-02

Page 1 of 1859
AUTO CAD

NOTES:
1. DIMENSIONS ARE IN INCHES.
2. CONCRETE PAD IS SHOWN FOR REPRESENTATION ONLY. DESIGN AND CONSTRUCTION SHALL BE PERFORMED BY OTHERS.
3. CONCRETE PAD MUST BE FLAT AND LEVEL IN ALL DIRECTIONS.
4. ENSURE CLEARANCE AROUND THE GENERATOR SET PER CODE. ENSURE CLEARANCE FOR DOOR SWINGS AND MAINTENANCE.
5. DO NOT OBSTRUCT AIRFLOW FOR COOLING AND EXHAUST
6. UNLESS OTHERWISE SPECIFIED, MOUNTING HOLE LOCATIONS ARE MIRRORED ACROSS THE CENTER LINE.
7. FUEL PIPE AND MISCELLANEOUS FITTINGS BETWEEN THE GENERATOR SET AND THE FUEL SUPPLY SHALL BE SUPPLIED AND INSTALLED BY OTHERS. INSTALL FLEXIBLE FUEL HOSE BETWEEN THE RIGID FUEL PIPE AND THE GENSET FUEL CONNECTION. CONSIDER GENERATOR VIBRATION WHEN INSTALLING RIGID PIPE.

REVISIONS				
ZONE	REV	DESCRIPTION	DATE	APPROVED

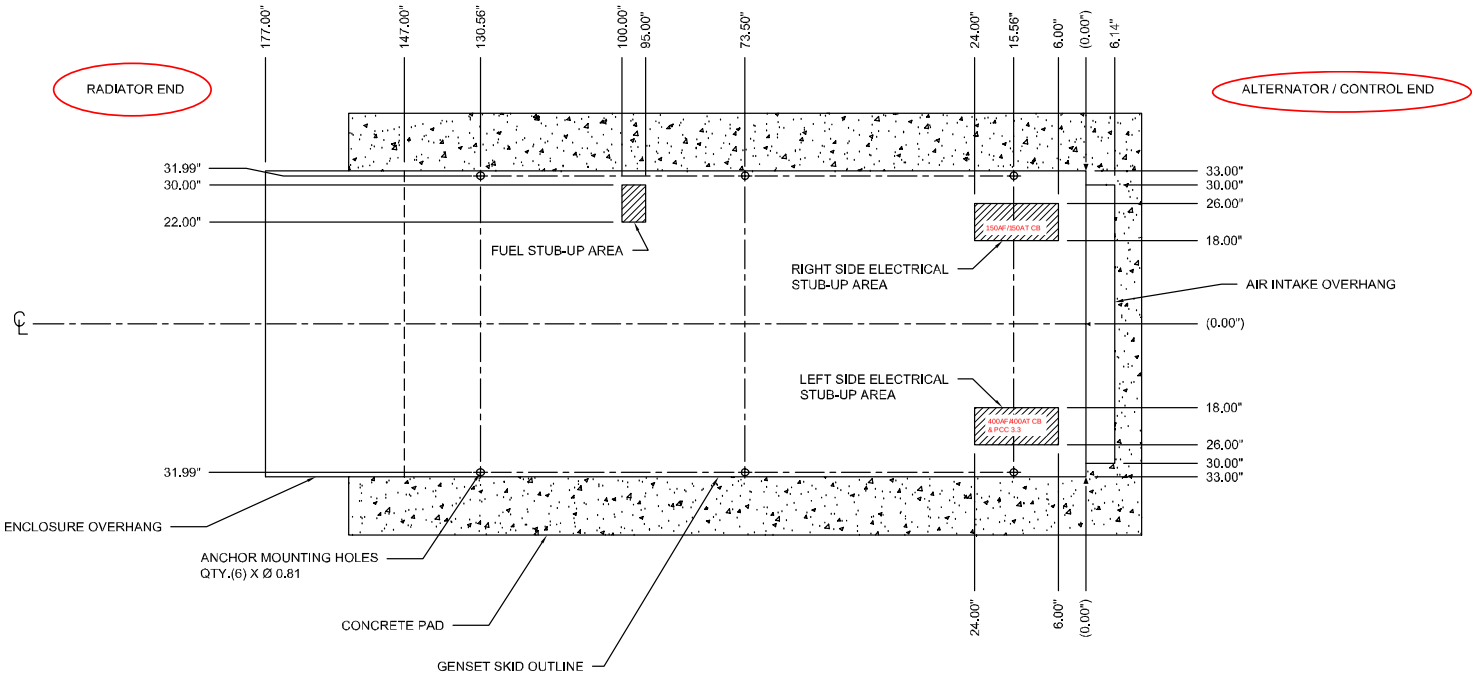

UNLESS OTHERWISE SPECIFIED, ALL DIMS ARE IN INCHES

TOLERANCES: FRACTIONAL: 1/4 .X: .06 .XX: .03 .XXX: .01 ANGLES: .5°

REFERENCES:	PREP. BY:	CHKD BY:	MODIFIED BY:	
GFEB-02	CR	GG	–	03/03/15
–				
–				

FINISH: N/A

ENGINE FAMILY: GFEB

Cummins Rocky Mountain
8211 E 96th AVE
HENDERSON, COLORADO 80640
PH: 303-287-0201
FAX: 303-287-4837

SITE NAME: –	CONTACT NAME: –	CUSTOMER PROJECT NO: –
CONTRACTOR NAME: –	CONTACT NO: –	CRM PROJECT NO: –

TITLE: ELECTRICAL STUB-UP & MOUNTING

SIZE: B | DWG NO: S66545A-7 | REV: A

SCALE: NONE | DO NOT SCALE | SHEET: 1 OF 1

THIS DRAWING CONTAINS INFORMATION THAT IS PROPRIETARY TO CRM, THIS INFORMATION IS TO BE HELD IN CONFIDENCE. NO DISCLOSURE OR OTHER USE OF THIS DRAWING IS TO BE MADE WITHOUT PRIOR WRITTEN CONSENT OF CRM.

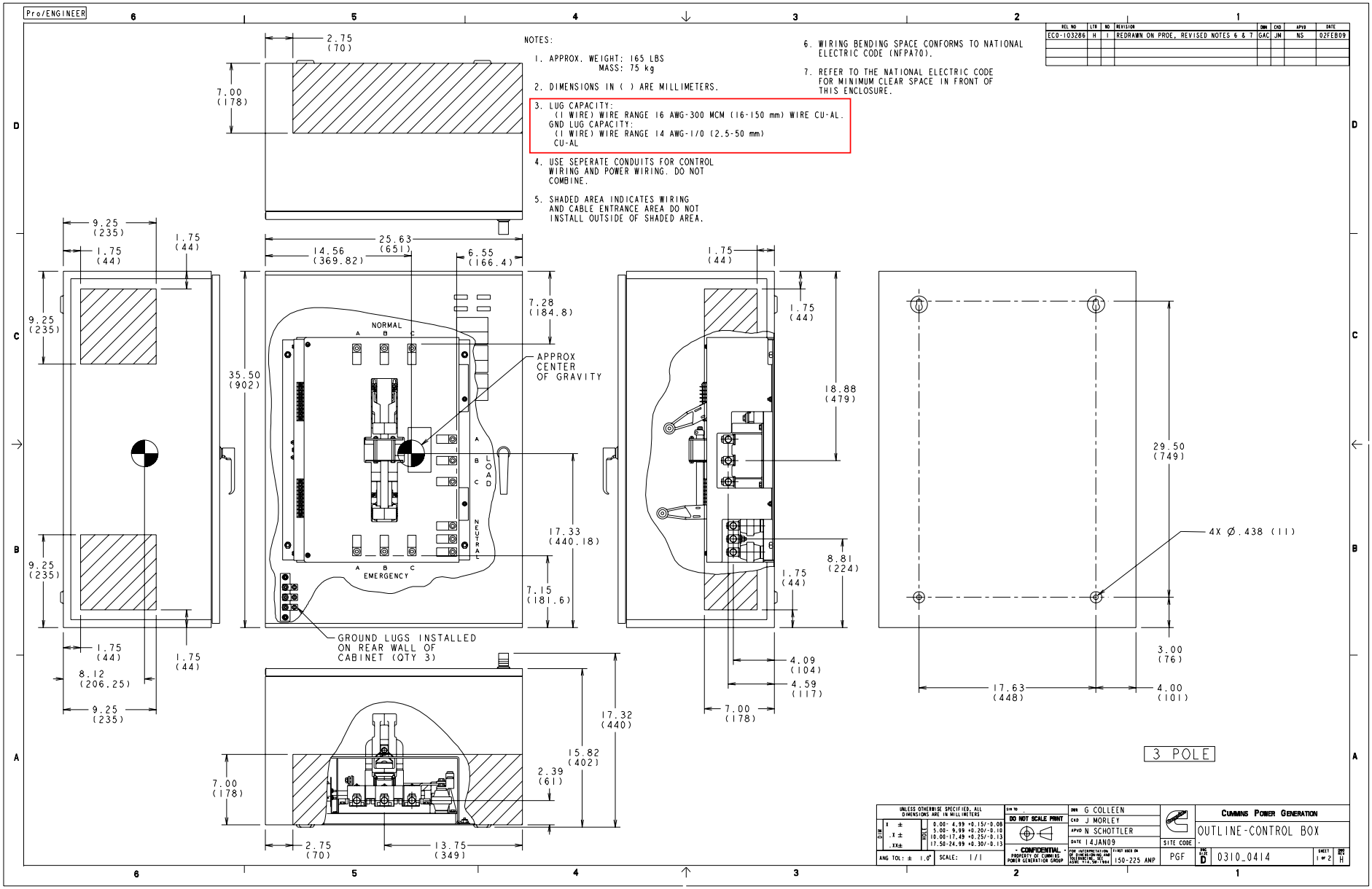
Pro/ENGINEER
NOTES:
1. APPROX. WEIGHT: 165 LBS
MASS: 75 kg
2. DIMENSIONS IN ( ) ARE MILLIMETERS.
3. LUG CAPACITY:
(1 WIRE) WIRE RANGE 16 AWG-300 MCM (16-150 mm) WIRE CU-AL.
GND LUG CAPACITY:
(1 WIRE) WIRE RANGE 14 AWG-1/0 (2.5-50 mm)
CU-AL
4. USE SEPERATE CONDUITS FOR CONTROL WIRING AND POWER WIRING. DO NOT COMBINE.
5. SHADED AREA INDICATES WIRING AND CABLE ENTRANCE AREA DO NOT INSTALL OUTSIDE OF SHADED AREA.
6. WIRING BENDING SPACE CONFORMS TO NATIONAL ELECTRIC CODE (NFPA70).
7. REFER TO THE NATIONAL ELECTRIC CODE FOR MINIMUM CLEAR SPACE IN FRONT OF THIS ENCLOSURE.
REL NO | LTR | NO | REVISION | DRN | CKD | APVD | DATE
ECO-103286 | H | 1 | REDRAWN ON PROE, REVISED NOTES 6 & 7 | GAC | JN | NS | 02FEB09
2.75 (70)
7.00 (178)
9.25 (235)
1.75 (44)
25.63 (651)
14.56 (369.82)
6.55 (166.4)
7.28 (184.8)
35.50 (902)
NORMAL
APPROX CENTER OF GRAVITY
LOAD
NEUTRAL
EMERGENCY
17.33 (440.18)
7.15 (181.6)
GROUND LUGS INSTALLED ON REAR WALL OF CABINET (QTY 3)
8.12 (206.25)
18.88 (479)
8.81 (224)
4.09 (104)
4.59 (117)
7.00 (178)
29.50 (749)
4X Ø.438 (11)
3.00 (76)
17.63 (448)
4.00 (101)
17.32 (440)
15.82 (402)
2.39 (61)
13.75 (349)
3 POLE
UNLESS OTHERWISE SPECIFIED, ALL DIMENSIONS ARE IN MILLIMETERS
DO NOT SCALE PRINT
DRN G COLLEEN
CKD J MORLEY
APVD N SCHOTTLER
DATE 14JAN09
CONFIDENTIAL - PROPERTY OF CUMMINS POWER GENERATION GROUP
SCALE: 1/1
150-225 ANP
PGF
CUMMINS POWER GENERATION
OUTLINE-CONTROL BOX
SITE CODE
SIZE D
0310_0414
SHEET 1 OF 2
REV H

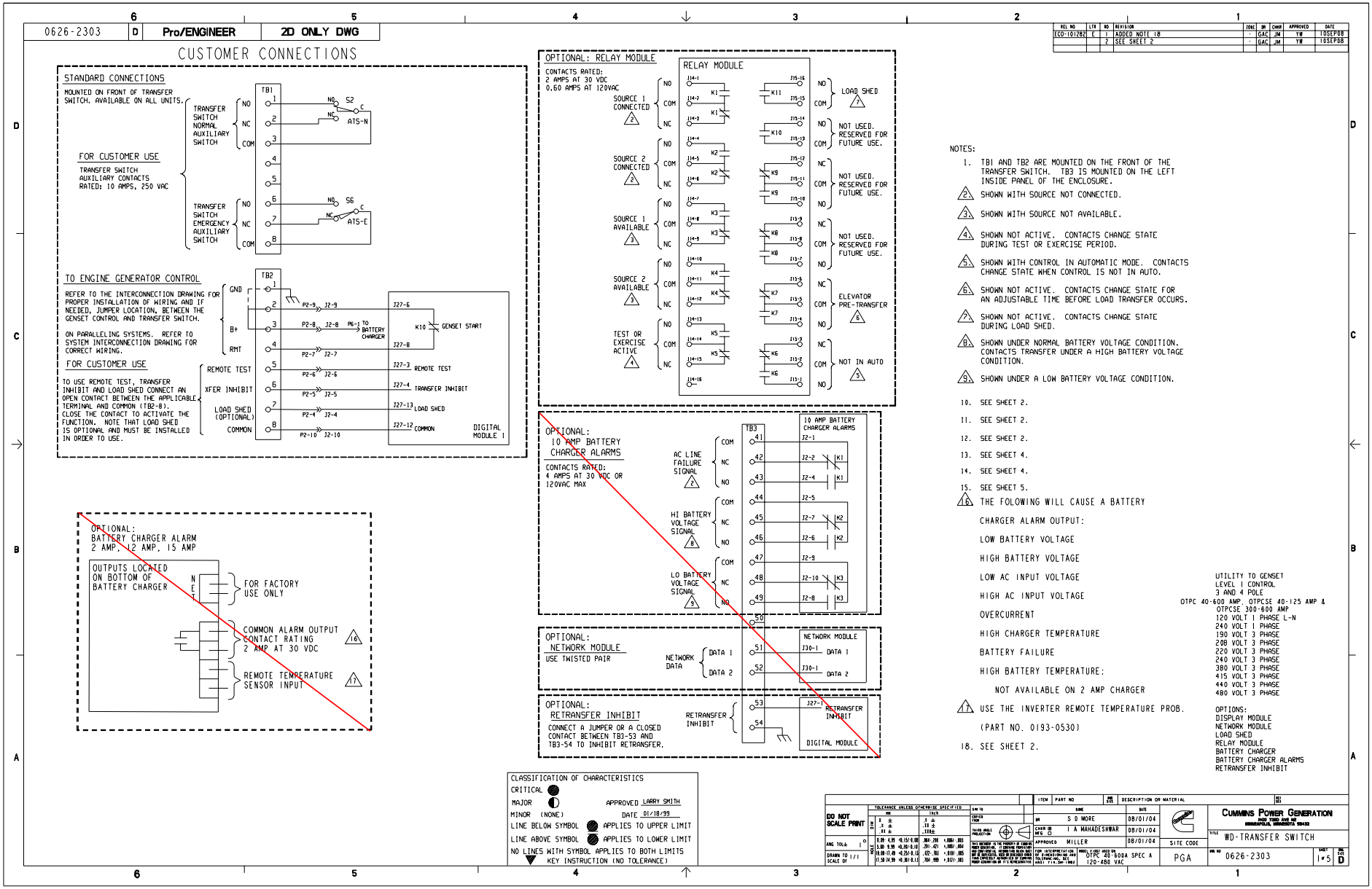
0626-2303
D
Pro/ENGINEER
2D ONLY DWG
CUSTOMER CONNECTIONS
STANDARD CONNECTIONS
MOUNTED ON FRONT OF TRANSFER SWITCH. AVAILABLE ON ALL UNITS.
TRANSFER SWITCH NORMAL AUXILIARY SWITCH
NO
NC
COM
TB1
S2
ATS-N
FOR CUSTOMER USE
TRANSFER SWITCH AUXILIARY CONTACTS RATED: 10 AMPS, 250 VAC
TRANSFER SWITCH EMERGENCY AUXILIARY SWITCH
S6
ATS-E
TO ENGINE GENERATOR CONTROL
REFER TO THE INTERCONNECTION DRAWING FOR PROPER INSTALLATION OF WIRING AND IF NEEDED, JUMPER LOCATION, BETWEEN THE GENSET CONTROL AND TRANSFER SWITCH.
ON PARALLELING SYSTEMS. REFER TO SYSTEM INTERCONNECTION DRAWING FOR CORRECT WIRING.
TB2
GND
B+
RMT
P2-9 J2-9
P2-8 J2-8
P6-3 TO BATTERY CHARGER
P2-7 J2-7
J27-6
K10
GENSET START
J27-8
FOR CUSTOMER USE
TO USE REMOTE TEST, TRANSFER INHIBIT AND LOAD SHED CONNECT AN OPEN CONTACT BETWEEN THE APPLICABLE TERMINAL AND COMMON (TB2-8). CLOSE THE CONTACT TO ACTIVATE THE FUNCTION. NOTE THAT LOAD SHED IS OPTIONAL AND MUST BE INSTALLED IN ORDER TO USE.
REMOTE TEST
XFER INHIBIT
LOAD SHED (OPTIONAL)
COMMON
P2-6 J2-6
P2-5 J2-5
P2-4 J2-4
P2-10 J2-10
J27-3 REMOTE TEST
J27-4 TRANSFER INHIBIT
J27-13 LOAD SHED
J27-12 COMMON
DIGITAL MODULE 1
OPTIONAL: RELAY MODULE
CONTACTS RATED: 2 AMPS AT 30 VDC 0.60 AMPS AT 120VAC
RELAY MODULE
SOURCE 1 CONNECTED
SOURCE 2 CONNECTED
SOURCE 1 AVAILABLE
SOURCE 2 AVAILABLE
TEST OR EXERCISE ACTIVE
J14-1
J14-2
J14-3
J14-4
J14-5
J14-6
J14-7
J14-8
J14-9
J14-10
J14-11
J14-12
J14-13
J14-14
J14-15
J14-16
K1
K2
K3
K4
K5
K6
K7
K8
K9
K10
K11
J15-16
J15-15
J15-14
J15-13
J15-12
J15-11
J15-10
J15-9
J15-8
J15-7
J15-6
J15-5
J15-4
J15-3
J15-2
J15-1
LOAD SHED
NOT USED. RESERVED FOR FUTURE USE.
NOT USED. RESERVED FOR FUTURE USE.
NOT USED. RESERVED FOR FUTURE USE.
ELEVATOR PRE-TRANSFER
NOT IN AUTO
OPTIONAL: 10 AMP BATTERY CHARGER ALARMS
CONTACTS RATED: 4 AMPS AT 30 VDC OR 120VAC MAX
AC LINE FAILURE SIGNAL
HI BATTERY VOLTAGE SIGNAL
LO BATTERY VOLTAGE SIGNAL
TB3
J2-1
J2-2
J2-4
J2-5
J2-7
J2-6
J2-9
J2-10
J2-8
10 AMP BATTERY CHARGER ALARMS
OPTIONAL: NETWORK MODULE
USE TWISTED PAIR
NETWORK DATA
DATA 1
DATA 2
J30-1
NETWORK MODULE
OPTIONAL: RETRANSFER INHIBIT
CONNECT A JUMPER OR A CLOSED CONTACT BETWEEN TB3-53 AND TB3-54 TO INHIBIT RETRANSFER.
RETRANSFER INHIBIT
J27-1
DIGITAL MODULE
OPTIONAL: BATTERY CHARGER ALARM 2 AMP, 12 AMP, 15 AMP
OUTPUTS LOCATED ON BOTTOM OF BATTERY CHARGER
N
E
T
FOR FACTORY USE ONLY
COMMON ALARM OUTPUT CONTACT RATING 2 AMP AT 30 VDC
REMOTE TEMPERATURE SENSOR INPUT
NOTES:
1. TB1 AND TB2 ARE MOUNTED ON THE FRONT OF THE TRANSFER SWITCH. TB3 IS MOUNTED ON THE LEFT INSIDE PANEL OF THE ENCLOSURE.
2. SHOWN WITH SOURCE NOT CONNECTED.
3. SHOWN WITH SOURCE NOT AVAILABLE.
4. SHOWN NOT ACTIVE. CONTACTS CHANGE STATE DURING TEST OR EXERCISE PERIOD.
5. SHOWN WITH CONTROL IN AUTOMATIC MODE. CONTACTS CHANGE STATE WHEN CONTROL IS NOT IN AUTO.
6. SHOWN NOT ACTIVE. CONTACTS CHANGE STATE FOR AN ADJUSTABLE TIME BEFORE LOAD TRANSFER OCCURS.
7. SHOWN NOT ACTIVE. CONTACTS CHANGE STATE DURING LOAD SHED.
8. SHOWN UNDER NORMAL BATTERY VOLTAGE CONDITION. CONTACTS TRANSFER UNDER A HIGH BATTERY VOLTAGE CONDITION.
9. SHOWN UNDER A LOW BATTERY VOLTAGE CONDITION.
10. SEE SHEET 2.
11. SEE SHEET 2.
12. SEE SHEET 2.
13. SEE SHEET 4.
14. SEE SHEET 4.
15. SEE SHEET 5.
16. THE FOLOWING WILL CAUSE A BATTERY CHARGER ALARM OUTPUT:
LOW BATTERY VOLTAGE
HIGH BATTERY VOLTAGE
LOW AC INPUT VOLTAGE
HIGH AC INPUT VOLTAGE
OVERCURRENT
HIGH CHARGER TEMPERATURE
BATTERY FAILURE
HIGH BATTERY TEMPERATURE:
NOT AVAILABLE ON 2 AMP CHARGER
17. USE THE INVERTER REMOTE TEMPERATURE PROB. (PART NO. 0193-0530)
18. SEE SHEET 2.
UTILITY TO GENSET
LEVEL 1 CONTROL
3 AND 4 POLE
OTPC 40-600 AMP, OTPCSE 40-125 AMP & OTPCSE 300-600 AMP
120 VOLT 1 PHASE L-N
240 VOLT 1 PHASE
190 VOLT 3 PHASE
208 VOLT 3 PHASE
220 VOLT 3 PHASE
240 VOLT 3 PHASE
380 VOLT 3 PHASE
415 VOLT 3 PHASE
440 VOLT 3 PHASE
480 VOLT 3 PHASE
OPTIONS:
DISPLAY MODULE
NETWORK MODULE
LOAD SHED
RELAY MODULE
BATTERY CHARGER
BATTERY CHARGER ALARMS
RETRANSFER INHIBIT
CLASSIFICATION OF CHARACTERISTICS
CRITICAL
MAJOR
MINOR (NONE)
LINE BELOW SYMBOL APPLIES TO UPPER LIMIT
LINE ABOVE SYMBOL APPLIES TO LOWER LIMIT
NO LINES WITH SYMBOL APPLIES TO BOTH LIMITS
KEY INSTRUCTION (NO TOLERANCE)
APPROVED LARRY SMITH
DATE 01/18/99
REL NO
LTR
NO
REVISION
ECO-101282
E
1
ADDED NOTE 18
2
SEE SHEET 2
DO NOT SCALE PRINT
S O MORE
I A MAHADESHWAR
MILLER
08/01/04
CUMMINS POWER GENERATION
MINNEAPOLIS, MINNESOTA 55432
WD-TRANSFER SWITCH
OTPC 40-600A SPEC A
120-480 VAC
PGA
0626-2303
SHEET 1 OF 1
REV D

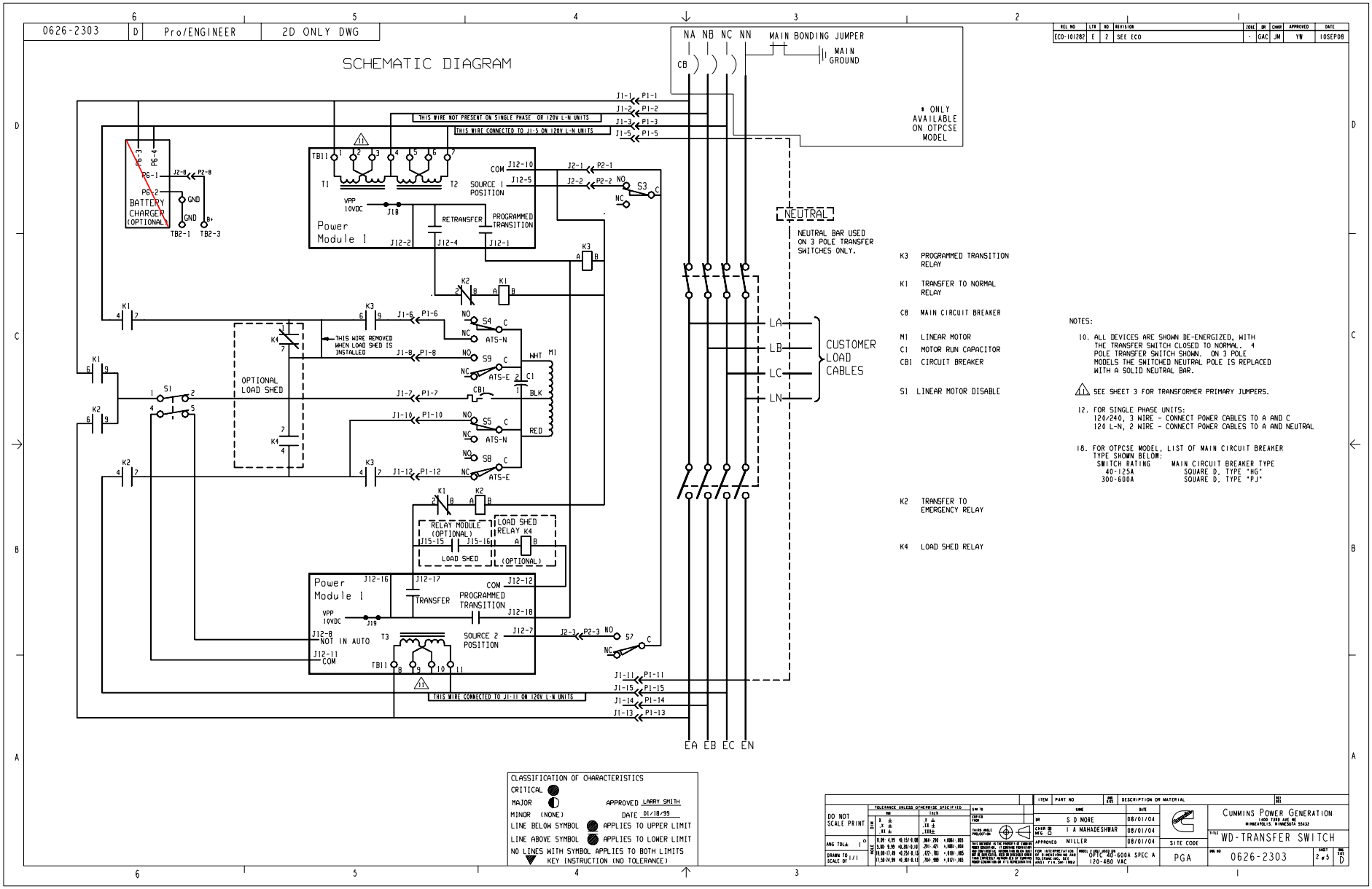
0626-2303
D
Pro/ENGINEER
2D ONLY DWG
SCHEMATIC DIAGRAM
NA NB NC NN
MAIN BONDING JUMPER
MAIN GROUND
CB
* ONLY AVAILABLE ON OTPCSE MODEL
THIS WIRE NOT PRESENT ON SINGLE PHASE OR 120V L-N UNITS
THIS WIRE CONNECTED TO J1-5 ON 120V L-N UNITS
BATTERY CHARGER (OPTIONAL)
Power Module 1
SOURCE 1 POSITION
RETRANSFER
PROGRAMMED TRANSITION
NEUTRAL
NEUTRAL BAR USED ON 3 POLE TRANSFER SWITCHES ONLY.
OPTIONAL LOAD SHED
THIS WIRE REMOVED WHEN LOAD SHED IS INSTALLED
CUSTOMER LOAD CABLES
LA
LB
LC
LN
RELAY MODULE (OPTIONAL)
LOAD SHED
LOAD SHED RELAY K4 (OPTIONAL)
TRANSFER
SOURCE 2 POSITION
NOT IN AUTO
THIS WIRE CONNECTED TO J1-11 ON 120V L-N UNITS
EA EB EC EN
K3 PROGRAMMED TRANSITION RELAY
K1 TRANSFER TO NORMAL RELAY
CB MAIN CIRCUIT BREAKER
M1 LINEAR MOTOR
C1 MOTOR RUN CAPACITOR
CB1 CIRCUIT BREAKER
S1 LINEAR MOTOR DISABLE
K2 TRANSFER TO EMERGENCY RELAY
K4 LOAD SHED RELAY
NOTES:
10. ALL DEVICES ARE SHOWN DE-ENERGIZED, WITH THE TRANSFER SWITCH CLOSED TO NORMAL. 4 POLE TRANSFER SWITCH SHOWN. ON 3 POLE MODELS THE SWITCHED NEUTRAL POLE IS REPLACED WITH A SOLID NEUTRAL BAR.
11. SEE SHEET 3 FOR TRANSFORMER PRIMARY JUMPERS.
12. FOR SINGLE PHASE UNITS:
120/240, 3 WIRE - CONNECT POWER CABLES TO A AND C
120 L-N, 2 WIRE - CONNECT POWER CABLES TO A AND NEUTRAL
18. FOR OTPCSE MODEL, LIST OF MAIN CIRCUIT BREAKER TYPE SHOWN BELOW:
SWITCH RATING MAIN CIRCUIT BREAKER TYPE
40-125A SQUARE D, TYPE "HG"
300-600A SQUARE D, TYPE "PJ"
CLASSIFICATION OF CHARACTERISTICS
CRITICAL
MAJOR
MINOR (NONE)
LINE BELOW SYMBOL APPLIES TO UPPER LIMIT
LINE ABOVE SYMBOL APPLIES TO LOWER LIMIT
NO LINES WITH SYMBOL APPLIES TO BOTH LIMITS
KEY INSTRUCTION (NO TOLERANCE)
APPROVED LARRY SMITH
DATE 01/18/99
ECO-101282 E 2 SEE ECO - GAC JM YW 10SEP08
DO NOT SCALE PRINT
S D MORE 08/01/04
I A MAHADESHWAR 08/01/04
NILLER 08/01/04
OPTC 40-600A SPEC A 120-480 VAC
CUMMINS POWER GENERATION
WD-TRANSFER SWITCH
SITE CODE PGA
0626-2303
2 of 5
D

Sheet 2 of 6

0626-2303	D	Pro/ENGINEER	2D ONLY DWG

REL NO	LTR	NO	REVISION	ZONE	DR	CHKR	APPROVED	DATE
ECO-101282	E	-	----	-	GAC	JM	YW	10SEP08

LINE TO LINE VOLTAGE	POWER MODULE 1 TRANSFORMER CONNECTIONS
120 VAC 1 PHASE 2 WIRE	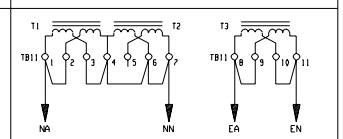
240 VAC 1 PHASE 3 WIRE	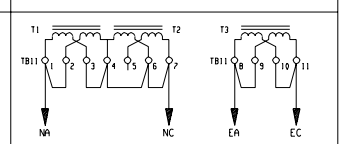
190-240 VAC 3 PHASE 4 WIRE	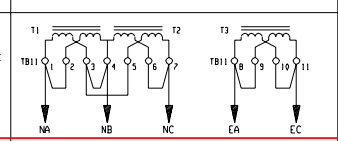
380-480 VAC 3 PHASE 4 WIRE	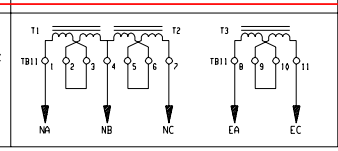

SEE 0626-2304 FOR 600 VOLT CONNECTIONS.

CLASSIFICATION OF CHARACTERISTICS
CRITICAL
MAJOR
MINOR (NONE)
LINE BELOW SYMBOL APPLIES TO UPPER LIMIT
LINE ABOVE SYMBOL APPLIES TO LOWER LIMIT
NO LINES WITH SYMBOL APPLIES TO BOTH LIMITS
KEY INSTRUCTION (NO TOLERANCE)

APPROVED LARRY SMITH
DATE 01/18/99

ITEM	PART NO	DESCRIPTION OR MATERIAL

DO NOT SCALE PRINT

TOLERANCE UNLESS OTHERWISE SPECIFIED

	MM		INCH	
DIM	X ± .X ± .XX ±		.X ± .XX ± .XXX±	
ANG TOL± 1°				
DRAWN TO SCALE OF 1/1	0.00-0.99	+0.15/-0.00	.004-.200	+.006/-.003
	5.00-9.99	+0.20/-0.10	.201-.421	+.008/-.004
	10.00-17.49	+0.25/-0.13	.422-.701	+.010/-.005
	17.50-24.99	+0.30/-0.13	.704-.999	+.012/-.003

SHIP TO
COPIED FROM
THIRD ANGLE PROJECTION

THIS DOCUMENT IS THE PROPERTY OF CUMMINS POWER GENERATION. IT CONTAINS PROPRIETARY AND CONFIDENTIAL INFORMATION BELOW THIS LINE. NOT TO BE REPRODUCED OR DISCLOSED IN WHOLE OR IN PART WITHOUT THE WRITTEN PERMISSION OF CUMMINS POWER GENERATION OR ITS REPRESENTATIVE

	NAME	DATE
DR	S D MORE	08/01/04
CHKR MFG	I A MAHADESHWAR	08/01/04
APPROVED	MILLER	08/01/04

FOR INTERPRETATION OF DIMENSIONS AND TOLERANCES, SEE ANSI Y14.5M-1982

MODEL: 1-SET USED ON OTPC 40-600A SPEC A 120-480 VAC

SITE CODE: PGA

CUMMINS POWER GENERATION
1400 73RD AVE NE
MINNEAPOLIS, MINNESOTA 55432

TITLE: WD-TRANSFER SWITCH

DWG NO: 0626-2303 SHEET 3 of 5 REV SIZE D

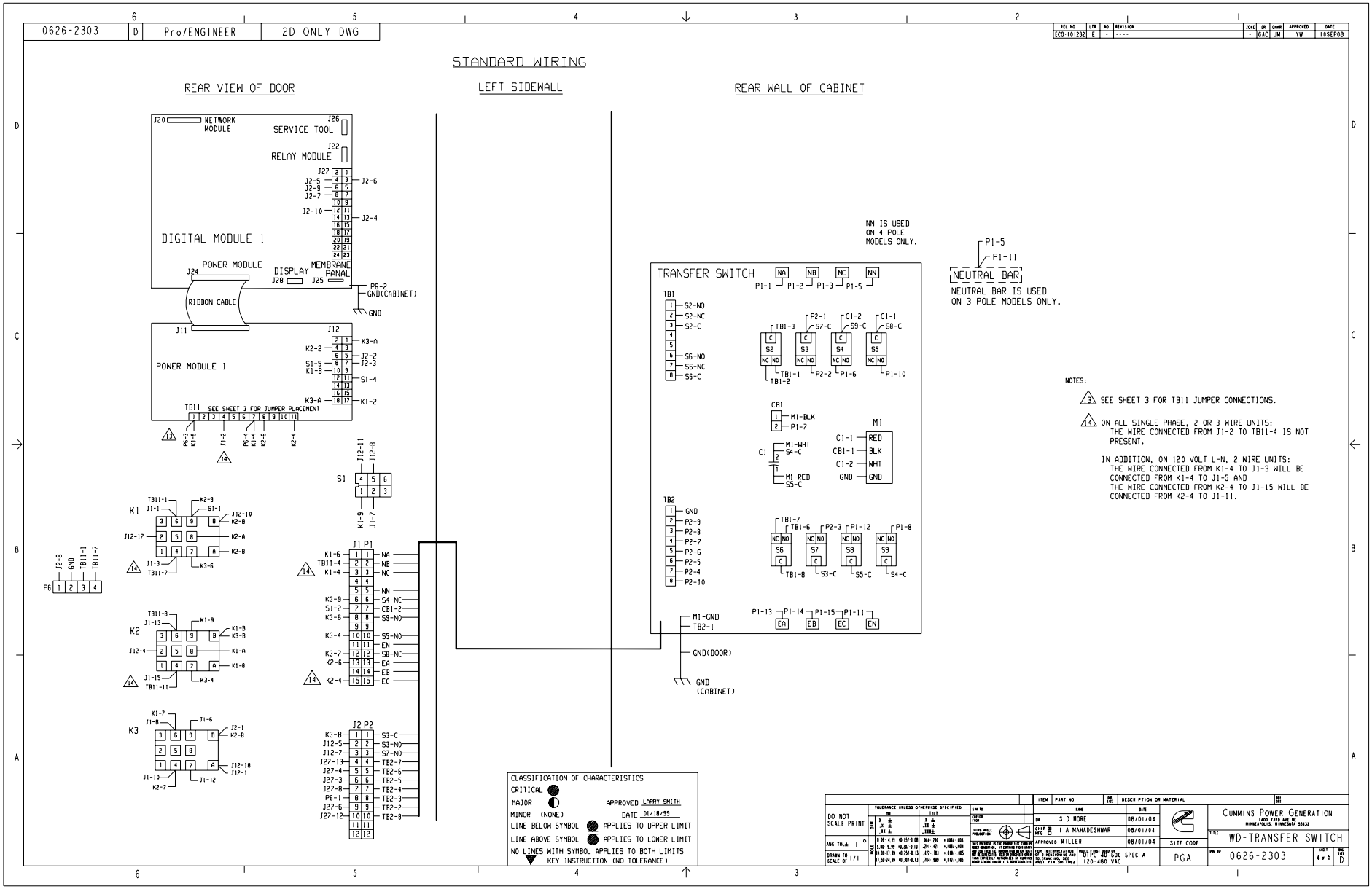
0626-2303
D
Pro/ENGINEER
2D ONLY DWG
STANDARD WIRING
REAR VIEW OF DOOR
LEFT SIDEWALL
REAR WALL OF CABINET
DIGITAL MODULE 1
POWER MODULE 1
NETWORK MODULE
SERVICE TOOL
RELAY MODULE
DISPLAY
MEMBRANE PANAL
RIBBON CABLE
TRANSFER SWITCH
NEUTRAL BAR
NEUTRAL BAR IS USED ON 3 POLE MODELS ONLY.
NN IS USED ON 4 POLE MODELS ONLY.
NOTES:
1. SEE SHEET 3 FOR TB11 JUMPER CONNECTIONS.
2. ON ALL SINGLE PHASE, 2 OR 3 WIRE UNITS: THE WIRE CONNECTED FROM J1-2 TO TB11-4 IS NOT PRESENT.
IN ADDITION, ON 120 VOLT L-N, 2 WIRE UNITS: THE WIRE CONNECTED FROM K1-4 TO J1-3 WILL BE CONNECTED FROM K1-4 TO J1-5 AND THE WIRE CONNECTED FROM K2-4 TO J1-15 WILL BE CONNECTED FROM K2-4 TO J1-11.
CLASSIFICATION OF CHARACTERISTICS
CRITICAL
MAJOR
MINOR (NONE)
LINE BELOW SYMBOL APPLIES TO UPPER LIMIT
LINE ABOVE SYMBOL APPLIES TO LOWER LIMIT
NO LINES WITH SYMBOL APPLIES TO BOTH LIMITS
KEY INSTRUCTION (NO TOLERANCE)
APPROVED LARRY SMITH
DATE 01/18/99
DO NOT SCALE PRINT
S D MORE 08/01/04
I A MAHADESHWAR 08/01/04
APPROVED MILLER 08/01/04
CUMMINS POWER GENERATION
1400 73RD AVE NE MINNEAPOLIS, MINNESOTA 55432
WD-TRANSFER SWITCH
SITE CODE
PGA
0626-2303
4 of 5
D

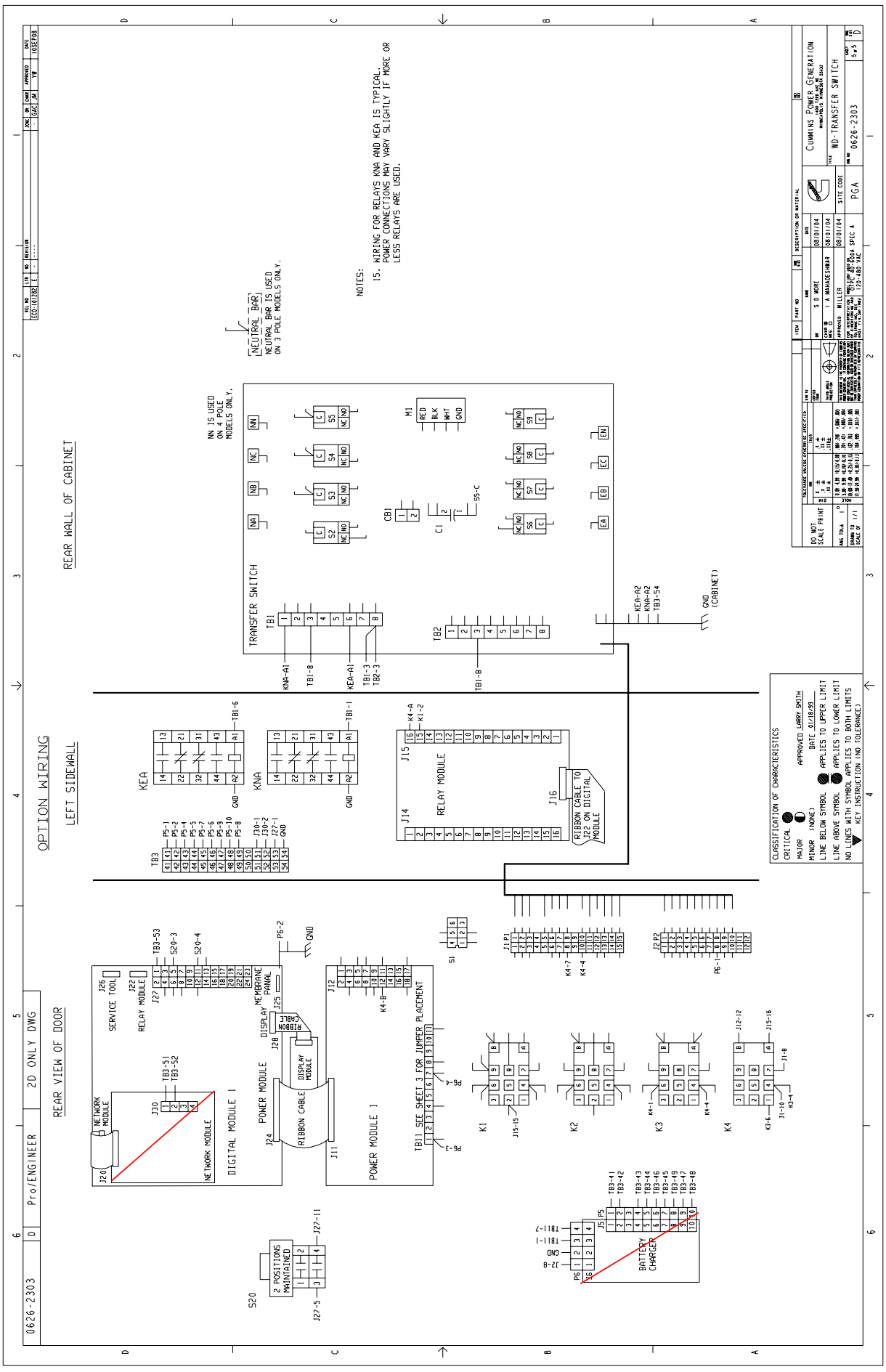
0626-2303
Pro/ENGINEER
2D ONLY DWG
OPTION WIRING
REAR VIEW OF DOOR
LEFT SIDEWALL
REAR WALL OF CABINET
NOTES:
1. WIRING FOR RELAYS KNA AND KEA IS TYPICAL. POWER CONNECTIONS MAY VARY SLIGHTLY IF MORE OR LESS RELAYS ARE USED.
NEUTRAL BAR
NEUTRAL BAR IS USED ON 3 POLE MODELS ONLY.
NN IS USED ON 4 POLE MODELS ONLY.
TRANSFER SWITCH
TB1
TB2
CB1
C1
S5-C
M1
RED
BLK
WHT
GND
KEA-A2
KNA-A2
TB3-54
GND (CABINET)
KEA
KNA
RELAY MODULE
J15
J14
J16
RIBBON CABLE TO J22 ON DIGITAL MODULE
TB3
DIGITAL MODULE 1
NETWORK MODULE
SERVICE TOOL
RELAY MODULE
POWER MODULE
DISPLAY MEMBRANE PANEL
RIBBON CABLE
DISPLAY MODULE
POWER MODULE 1
TB11 SEE SHEET 3 FOR JUMPER PLACEMENT
K1
K2
K3
K4
S1
S20
2 POSITIONS MAINTAINED
BATTERY CHARGER
CLASSIFICATION OF CHARACTERISTICS
CRITICAL
MAJOR
MINOR (NONE)
LINE BELOW SYMBOL APPLIES TO UPPER LIMIT
LINE ABOVE SYMBOL APPLIES TO LOWER LIMIT
NO LINES WITH SYMBOL APPLIES TO BOTH LIMITS
KEY INSTRUCTION (NO TOLERANCE)
APPROVED LARRY SMITH
DATE 07/18/99
DO NOT SCALE PRINT
CUMMINS POWER GENERATION
WD-TRANSFER SWITCH
SITE CODE
PGA
0626-2303
SHEET 1 OF 5
REV D

Sheet 5 of 6

PTC® Creo® Parametric

REL NO	LTR	NO	REVISION	DWN	CKD	APVD	DATE
ECO-146025	A	1	PRODUCTION_RELEASE	SGM	GRB	L.SMITH	22AUG14

73.2

130

SHORT-CIRCUIT WITHSTAND/CLOSING RATINGS

Specific Fuse Manufacturer and Type Listing

When protected by a fuse of the specific fuse class and up to the fuse amperes listed below, this transfer switch is suitable for use in a circuit capable of delivering up to the short circuit current and voltage listed below.

Short-Circuit Current RMS Symmetrical Amperes	Short Circuit AC Voltage	Fuse Class	Maximum Fuse Amperes
200000	600	J, RK1, RK5	600
200000	600	L, T	1200

Specific Circuit Breaker Manufacturer and Type Listing

When protected by a circuit breaker of a specific manufacturer and type, and up to the maximum breaker amperes listed below, this transfer switch is suitable for use in a circuit capable of delivering up to the short circuit current and voltage listed below, but not more than the rating of the specific circuit breaker.

Short-Circuit Current RMS Symmetrical Amperes	Short Circuit AC Voltage	Maximum Breaker Amperes
30000	600	400

GE

TEYD	TETH	TEYL	THJK	TJK	TJJ	

Siemens

BQCH	FD6	HFD6	HJD6[1]	JXD2	NFGA	QJ2
BQD	FD6A	HFGA	HJGA	JXD6[1]	NGB	QJ2-H
CC	FXD6	HFXD6	HJXD6[1]	LDGA	NGDA	QJH2
CQD	FXD6A	HHFD6	HLGA	LFGA	NGG	
ED2	HDGA	HHFXD6	HLGB	LJGA	NJGA	
ED4	HED4	HHJD6[1]	HQJ2	LLGA	NLGA	
ED6	HED6	HHJXD6[1]	JD6[1]	LLGB	NLGB	

1 - 240 Volt Maximum

Eaton

BAB	EGE[3]	GHBGFEP	JGE	QBHW	QHCX	
CHKD[2]	EGH[3]	GHBS	JGH	QC	QHPW	
CKD[2]	EGS[3]	GHC	JGS	QCF	QHPX	
DK	EHD	GHCGFEP	KD	QCGF	QPGF	
ED	FD	HFD	KDB	QCGFEP	QPGFEP	
EDB	FDB	HJD	QBGF	QCHGF	QPHGF	
EDC	FDE	HKD	QBGFEP	QCHGFEP	QPHGFEP	
EDH	GBHS	HQP	QBH	QCHW	QPHW	
EDS	GD	JD	QBHGF	QCR		
EGB[3]	GHB	JDB	QBHGFEP	QHCW		

2 - 310 trip unit only
3 - Limited to 70 amps maximum

A048E949.A

NOTES:

1. LABEL SHOWN ON PRINT IS NOT ARTWORK. VENDOR ARTWORK CREATED TO PRODUCE THIS LABEL MUST BE SIGNED OFF BY CUMMINS POWER GENERATION PURCHASING.
2. ALL TEXT TO BE HELVETICA SANS SERIF, OR EQUIVALENT.
3. BLACK TEXT AND WHITE BACKGROUND.
4. MATERIAL THICKNESS: 10 MIL.
5. SEE CUMMINS POWER GENERATION MATERIAL SPECIFICATIONS FOR APPLICATION INFORMATION.
6. IF CORNERS SHOWN SQUARE, RADIUS OPTIONAL.
7. IF CSA AGENCY APPROVAL REQUIRED LOCATE VENDOR CSA IDENTIFICATION MARK IN LOWER RIGHT HAND CORNER.
8. LOCATE LABEL PART NUMBER & REVISION LETTER WHERE SHOWN.

-THIS IS A CONTROLLED ITEM-

PER CPG PROCEDURE FRE-1002

TO MAINTAIN COMPLIANCE WITH REQUIREMENTS OF THE CODES, STANDARDS, OR AGENCIES LISTED BELOW

☒ CSA ☒ UL ☐ CE ☐ RVIA ☐ ABYC
☐ IBC ☐ OTHER _____ ☐ OTHER _____

CHANGES, DEVIATIONS, OR SUBSTITUTIONS OF MATERIAL, PROCESS, OR PERFORMANCE FOR THIS ITEM MUST BE APPROVED BY THE FOLLOWING CONTROLLED ITEM APPROVER

RESPONSIBLE CIA ROLE PE TRANSFER SWITCH CIA
RESPONSIBLE CIA ROLE _____
RESPONSIBLE CIA ROLE _____

UNLESS OTHERWISE SPECIFIED, ALL DIMENSIONS ARE IN MILLIMETERS

DIM		HOLE	
	X ± 1		0.00- 4.99 +0.15/-0.08
	.X ± 0.8		5.00- 9.99 +0.20/-0.10
	.XX± 0.38		10.00-17.49 +0.25/-0.13
			17.50-24.99 +0.30/-0.13

ANG TOL: ± 1.0° SCALE: 1/1

SIM TO 0098-6886
DO NOT SCALE PRINT

- CONFIDENTIAL -
PROPERTY OF CUMMINS POWER GENERATION GROUP

DWN S.MADARAKALL
CKD G.BAIRAGI
APVD L.SMITH
DATE 22AUG14

FOR INTERPRETATION OF DIMENSIONING AND TOLERANCING, SEE ASME Y14.5M-1994

FIRST USED ON OT 150-260A

SITE CODE PGF

CUMMINS POWER GENERATION

LABEL, INFORMATION
(WITHSTAND RATING)

DWG SIZE B | A048E949 | SHEET 1 OF 1 | DWG REV A

PTC® Creo® Parametric

REL NO	LTR	NO	REVISION	DRN	CKD	APVD	DATE
ECO-147537	A	1	PRODUCTION_RELEASE	SGM	GRB	L.SMITH	06NOV14

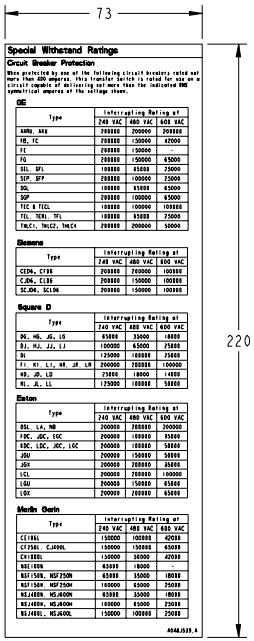

Special Withstand Ratings

Circuit Breaker Protection

When protected by one of the following circuit breakers rated not more than 600 amperes, this transfer switch is rated for use on a circuit capable of delivering not more than the indicated RMS symmetrical amperes at the voltage shown.

GE

Type	Interrupting Rating at 240 VAC	480 VAC	600 VAC
AKRH, AKR	200000	200000	200000
FB, FC	200000	150000	42000
FI	200000	150000	-
FG	200000	150000	65000
SFL, SFL	100000	85000	25000
SIP, SFP	200000	100000	25000
SGL	100000	85000	65000
SGP	200000	100000	65000
TEC & TECL	100000	100000	100000
TEL, TERL, TFL	100000	85000	25000
THLC1, THLC2, THLC4	200000	200000	35000

Siemens

Type	Interrupting Rating at 240 VAC	480 VAC	600 VAC
QJD4, CJD4	200000	200000	100000
CJD6, CJD6	200000	150000	100000
SCJD6, SCLD6	200000	150000	100000

Square D

Type	Interrupting Rating at 240 VAC	480 VAC	600 VAC
DG, HG, JG, LG	65000	35000	18000
DJ, HJ, JJ, LJ	100000	65000	25000
DK	125000	100000	25000
FI, KI, LI, MA, JA, LA	200000	200000	100000
HD, JD, LD	25000	18000	14000
HL, JL, LL	125000	100000	50000

Eaton

Type	Interrupting Rating at 240 VAC	480 VAC	600 VAC
DSL, LA, NB	200000	200000	200000
FDC, JDC, LDC	200000	100000	35000
KDC, LDC, JDC, LDC	200000	100000	50000
JDU	200000	150000	50000
JDH	200000	200000	35000
LCL	200000	200000	100000
LDU	200000	150000	65000
LDS	200000	200000	65000

Merlin Gerin

Type	Interrupting Rating at 240 VAC	480 VAC	600 VAC
CE184L	150000	100000	42000
CF258L CJ400L	150000	150000	65000
CH180BL	150000	36000	42000
NSE100N	65000	18000	-
NSF150N, NSF250N	65000	35000	18000
NSF150H, NSF250H	100000	65000	25000
NSJ400N, NSJ600N	65000	35000	18000
NSJ400H, NSJ600H	100000	65000	25000
NSJ400L, NSJ600L	150000	100000	25000

A048J539.1

-THIS IS A CONTROLLED ITEM-
PER POLICY-PROCEDURE PGG 1-01-01-116

TO MAINTAIN COMPLIANCE WITH REQUIREMENTS OF THE CODES, STANDARDS, OR AGENCIES LISTED BELOW

☑ CSA ☑ UL ☐ CE ☐ RVIA ☐ ABYC
☐ IBC ☐ OTHER _____ ☐ OTHER _____

CHANGES, DEVIATIONS, OR SUBSTITUTIONS OF MATERIAL, PROCESS, OR PERFORMANCE FOR THIS ITEM MUST BE APPROVED BY THE FOLLOWING CONTROLLED ITEM APPROVER

RESPONSIBLE C1A ROLE PE TRANSFER SWITCH C1A
RESPONSIBLE C1A ROLE _____
RESPONSIBLE C1A ROLE _____

NOTES:

1. LABEL SHOWN ON PRINT IS NOT ARTWORK. VENDOR ARTWORK CREATED TO PRODUCE THIS LABEL MUST BE SIGNED OFF BY CUMMINS POWER GENERATION PURCHASING.
2. ALL TEXT TO BE HELVETICA SANS SERIF, OR EQUIVALENT.
3. BLACK TEXT AND WHITE BACKGROUND.
4. MATERIAL THICKNESS: 10 MIL.
5. SEE CUMMINS POWER GENERATION MATERIAL SPECIFICATIONS FOR APPLICATION INFORMATION.
6. IF CORNERS SHOWN SQUARE, RADIUS OPTIONAL.
7. IF CSA AGENCY APPROVAL REQUIRED LOCATE VENDOR CSA IDENTIFICATION MARK IN LOWER RIGHT HAND CORNER.
8. LOCATE LABEL PART NUMBER & REVISION LETTER WHERE SHOWN.

UNLESS OTHERWISE SPECIFIED, ALL DIMENSIONS ARE IN MILLIMETERS

DIM		MOLD
X	± 1	0.00- 4.99 +0.15/-0.08
.X	± 0.8	5.00- 9.99 +0.20/-0.10
.XX	± 0.38	10.00-17.49 +0.25/-0.13
		17.50-24.99 +0.30/-0.13

ANG TOL: ± 1.0° SCALE: 1/1

SIM TO 0098-6919
DO NOT SCALE PRINT
- CONFIDENTIAL -
PROPERTY OF CUMMINS POWER GENERATION GROUP

DRN S.MADARAKALL
CKD G.BAIRAGI
APVD L.SMITH
DATE 06NOV14

FOR INTERPRETATION OF DIMENSIONING AND TOLERANCING, SEE ASME Y14.5M-1994

FIRST USED ON AT/OTPC/OTIC 150-260A

SITE CODE PGF

CUMMINS POWER GENERATION

LABEL, INFORMATION
(SPECIAL BREAKER)

DWG SIZE C | A048J539 | SHEET 1 OF 1 | DWG REV A

Drawing Name: A048J540 Revision: A
Part Name: A048J539 Revision: A
Sheet 1 of 2

Sturgeon ELECTRIC
12150 E 112TH AVE, HENDERSON, CO 80640

MYR GROUP

OPERATIONS MANUAL
PANEL BOARDS, TRANSFORMERS, SAFETY SWITCHES

PROJECT:
EISENHOWER/JOHNSON MEMORIAL TUNNEL
FIRE SUPPRESSION SYSTEM
PROJECT# C 0703-360

PREPARED BY: **JASON WILLIS**
CELL PHONE: **(303) 944-1190**
FAX: **(303) 227-6978**
OFFICE: **(303)-853-7651**
EMAIL: **JWillis@myrgroup.com**

** Respect * Integrity * Responsiveness **
** Creativity * Initiative * Team Work * Safety **

CDOT - EJMT

Operations Manual

General Order

SDN0598403

Volume 1 of 1

Equipment:

Panelboards
Dry Type Transformers
Safety Switches

CED/CONSOL ELECL DISTR DENVER CO PO# 1872-WP969455D

Date: 4/23/2015

©2015 Eaton Corporation, All Rights Reserved

Main Table of Contents

	Contact Page	3
1.0	Panelboards	4
	1.1 Drawings and Pictures	5
	1.2 Instruction Data	9
	1.3 Component Data	39
	1.4 Renewal Parts	57
2.0	Dry Type Transformers	102
	2.1 Drawings	103
	2.2 Instruction Data	106
3.0	Safety Switches	115
	3.1 Drawings	116
	3.2 Instruction Data	121
	3.3 Renewal Parts	151

Contact Information

Visit our Web Site http://www.eatonelectrical.com to view the on-line catalog, pricing, document support, distribution directory, news and events.

For warranty support	**877-ETNCARE**
For a general directory of Eaton Electrical products	**(800) 525-2000**
For on-site field service, commissioning & maintenance	**(800) 498-2678**

Panelboards

Drawings and Pictures

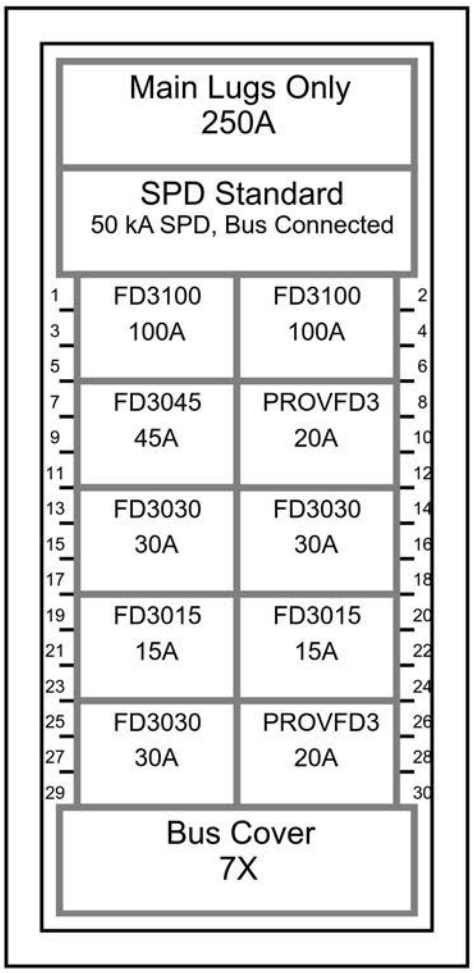

General Information **(Section 1 of 1)**

Service Voltage:	480V 3Ph 3W	**Enclosure:**	Type 1
Bus Rating & Type:	250A Aluminum	**Neutral Rating:**	None
Ground Bar:	Std. Bolted Aluminum, Al or Cu cable		
S.C. Rating:	18k A.I.C. Fully Rated		

Main Device Type:	Main Lugs Only - Top Cable Entry
Main Terminals:	Mechanical - (1) #6-350 kcmil (Cu/Al)
Neutral Terminals:	None
Box Catalog No.:	EZB2060R
Trim:	EZ Trim, Door in Door, Concealed Hardware (EZT2060S)
	Surface Mounted
Box Dimensions:	60.00" [1524.0mm]H x 20.00" [508.0mm]W x 5.75" [146.1mm]D
Min. Gutter Size:	Top = 5.5" [139.7mm] Bottom = 5.5" [139.7mm] Left = 4" [101.6mm] Right = 4" [101.6mm]

Panel ID Nameplate: **(1) EMWH1**
Type: Plastic, screw-on **(2) 480V 3Ph 3W**
Color: White with Black Letters **(3)**

UL

Trim Lock: Standard Lock & Key (Keyed WEM2)
Circuit Directory: Metal Frame with Plastic Cover
Box is Made in America.

Device Modifications:

Ref #	Description

Notes:

Branch Devices

Qty	Poles	Trip	Frame	Amps	kAIC
2	3	100	FD	225	18
2	3	15	FD	225	18
3	3	30	FD	225	18
1	3	45	FD	225	18
2	3		PROVFD3		

The information on this document is created by Eaton Corporation. It is disclosed in confidence and it is only to be used for the purpose in which it is supplied.

PREPARED BY: SUSAN HINTON	DATE: 4/23/2015	**Eaton**			
APPROVED BY:	DATE:	JOB NAME: CDOT - EJMT			
		DESIGNATION: EMWH1			
VERSION: 1.0.0.3		TYPE: PRL3a		DRAWING TYPE: Final	
NEG-ALT Number: DN800129X5K2-R000	REVISION: 0	DWG SIZE: A	G.O.: SDN0598403	ITEM: 001I	SHEET: 1 of 1

Sturgeon ELECTRIC
12150 E 112TH AVE, HENDERSON, CO 80640

Powering Business Worldwide

PANEL EMWH1

Service Voltage:	480V 3Ph 3W	**Enclosure:**	Type 1
Bus Rating & Type:	250A Aluminum	**Neutral Rating:**	None
Ground Bar:	Std. Bolted Aluminum, Al or Cu cable		
S.C. Rating:	18k A.I.C. Fully Rated		
Main Device Type:	Main Lugs Only - Top Cable Entry		
Main Terminals:	Mechanical - (1) #6-350 kcmil (Cu/Al)		
Neutral Terminals:	None		
Box Catalog No.:	EZB2060R		
Trim:	EZ Trim, Door in Door, Concealed Hardware (EZT2060S)		
	Surface Mounted		

Box Dimensions:	60.00" [1524.0mm]H x 20.00" [508.0mm]W x 5.75" [146.1mm]
Min. Gutter Size:	Top = 5.5" [139.7mm] Bottom = 5.5" [139.7mm] Left = 4" [101.6mm] Right = 4" [101.6mm]

Panel ID Nameplate: **(1) EMWH1**
Type: Plastic, screw-on **(2) 480V 3Ph 3W**
Color: White with Black Letters **(3)**

Sturgeon ELECTRIC
12150 E 112TH AVE, HENDERSON, CO 80640

EATON
Powering Business Worldwide

PANEL SCHEDULE FOR EMWH1

PANEL: **(N) PNL EMWH1**

FEED FROM: ATS-EMWH1
VOLTAGE: 480/277
PHASE: 3
WIRE: 4

NEUTRAL: 100%
GROUND: STANDARD
ENCLOSURE: NEMA 1
MOUNTING: SURFACE

MANUFACTURER: SEE SPECIFICATIONS
BUS AMPACITY: 225
MAIN: 225A MLO
AIC: 18,000

CKT NO	CKT DESCRIPTION	LOAD VA	LOAD TYPE	CKT BREAKER P	CKT BREAKER A	CKT BREAKER NOTE	CKT BREAKER NOTE	CKT BREAKER A	CKT BREAKER P	LOAD TYPE	LOAD VA	CKT DESCRIPTION	CKT NO
1	HEATING CIRC PUMP #1	14400	M	3	100			100	3	N	14400	HEATING CIRC PUMP #2	2
3	/	14400	M	/	/			/	/	N	14400	/	4
5	/	14400	M	/	/			/	/	N	14400	/	6
7	XFMR T-EMWL1			3	45			-	-			SPACE	8
9	/			/	/			-	-			/	10
11	/			/	/			-	-			/	12
13	EISENHOWER TUNNEL	1000	O	3	30			30	3	O	1000	JOHNSON TUNNEL	14
15	FIRE PROTECTION SYSTEM	1000	O	/	/			/	/	O	1000	FIRE PROTECTION SYSTEM	16
17	/	1000	O	/	/			/	/	O	1000	/	18
19	BOILER CIRC PUMP #3	1333	M	3	15			15	3	N	1333	BOILER CIRC PUMP #4	20
21	/	1333	M	/	/			/	/	N	1333	/	22
23	/	1333	M	/	/			/	/	N	1333	/	24
25	SPD			3	30			-	-			SPACE	26
27	/			/	/			-	-			/	28
29	/			/	/			-	-			/	30

SUBFED LOAD SUMMARY

LOAD	PHASE	KVA L	R	H	M	MLRG	CM	K	S	N	E
PANEL 'EMWL1'	A	-	-	-	1.5	0.9	-	-	-	-	6.5
	B	0.4	-	-	1.5	0.9	-	-	-	-	3.4
	C	-	-	-	1.5	0.9	-	-	-	-	6.6

LOAD TYPE	CONNECTED (KVA) A	B	C	TOTAL	DEMAND FACTOR	DEMAND (KVA) A	B	C	TOTAL
LIGHTING (L)	0.0	0.4	0.0	0.4	1.25	0.0	0.5	0.0	0.5
RECEPTACLE (R)	0.0	0.0	0.0	0.0	1.00	0.0	0.0	0.0	0.0
REC (>10000VA) (R)	0.0	0.0	0.0	0.0	0.50	0.0	0.0	0.0	0.0
HEATER (H)	0.0	0.0	0.0	0.0	1.00	0.0	0.0	0.0	0.0
LARGEST MOTOR (M)	14.4	14.4	14.4	43.2	1.25	18.0	18.0	18.0	54.0
REMAIN MOTOR (M)	2.8	2.8	2.8	8.5	1.00	2.8	2.8	2.8	8.5
CONTINUOUS LOAD (CL)	0.0	0.0	0.0	0.0	1.25	0.0	0.0	0.0	0.0
KITCHEN LOADS (K)	0.0	0.0	0.0	0.0	1.00	0.0	0.0	0.0	0.0
SPECIFIC LOADS (S)	0.0	0.0	0.0	0.0	1.00	0.0	0.0	0.0	0.0
NONCOINCIDENTAL (N)	15.7	15.7	15.7	47.2	0.00	0.0	0.0	0.0	0.0
OTHER LOAD (O)	8.5	5.4	8.6	22.5	1.00	8.5	5.4	8.6	22.5
TOTAL DEMAND (KVA)						29.3	26.7	29.4	85.5
SPARE (KVA)						33.0	35.6	32.9	101.6
TOTAL (A/PH)						**105.9**	**96.4**	**106.3**	**102.8**
SPARE (A/PH)						119.1	128.6	118.7	122.2

NOTES:
1. PROVIDE PANEL WITH INTERNALLY MOUNTED TYPE-2, 20kA SURGE PROTECTION DEVICE.
2. HEATING AND BOILER CIRC PUMPS DO NOT RUN SIMULTANEOUSLY.

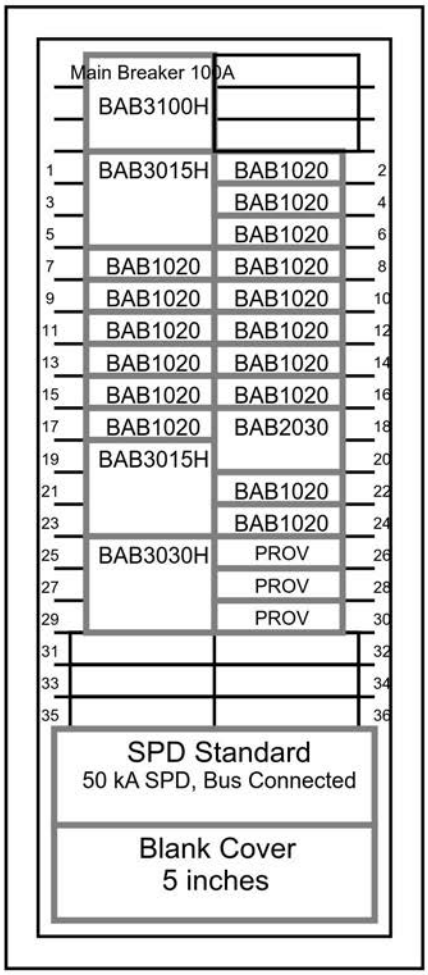

General Information **(Section 1 of 1)**

Service Voltage:	208Y/120V 3Ph 4W	**Enclosure:**	Type 1
Bus Rating & Type:	100A Aluminum	**Neutral Rating:**	100A
Ground Bar:	Std. Bolted Aluminum, Al or Cu cable		
S.C. Rating:	10k A.I.C. Fully Rated		

Main Device Type: Main Breaker - Top Cable Entry
Main Terminals: Mechanical - (1) #8-1/0 (Cu/Al)
Neutral Terminals: Mechanical - (1) #14-1/0 (Cu/Al)
Box Catalog No.: EZB2048R
Trim: EZ Trim, Door in Door, Concealed Hardware (EZT2048S)

Surface Mounted

Box Dimensions: 48.00" [1219.2mm]H x 20.00" [508.0mm]W x 5.75" [146.1mm]D
Min. Gutter Size: Top = 5.5" [139.7mm] Bottom = 5.5" [139.7mm]
Left = 6.0" [152.4mm] Right = 6.0" [152.4mm]

Panel ID Nameplate: **(1) EMWL1**
Type: Plastic, screw-on **(2) 208Y/120V 3Ph 4W**
Color: White with Black Letters **(3)**

NEC Lighting & Appliance, UL CTL *****Non-Interchangeable Main Device*****

Trim Lock: Standard Lock & Key (Keyed WEM2)
Circuit Directory: Metal Frame with Plastic Cover
Box is Made in America.
Main Circuit Breaker Trip Type: Thermal-Magnetic.

Device Modifications:

Ref #	Description

Notes:

Branch Devices

Qty	Poles	Trip	Frame	Amps	kAIC
1	3	30	BAB	100	10
2	3	15	BAB	100	10
1	2	30	BAB	100	10
16	1	20	BAB	100	10
3	1		PROV		

The information on this document is created by Eaton Corporation. It is disclosed in confidence and it is only to be used for the purpose in which it is supplied.

PREPARED BY: SUSAN HINTON	DATE: 4/23/2015	**Eaton**			
APPROVED BY:	DATE:	JOB NAME: CDOT - EJMT			
		DESIGNATION: EMWL1			
VERSION: 1.0.0.3		TYPE: PRL1a		DRAWING TYPE: Final	
NEG-ALT Number: DN800129X5K2-R000	REVISION: 0	DWG SIZE: A	G.O.: SDN0598403	ITEM: 002I	SHEET: 1 of 1

Sturgeon ELECTRIC
12150 E 112TH AVE, HENDERSON, CO 80640

EATON
Powering Business Worldwide

PANEL EMWL1

Service Voltage:	208Y/120V 3Ph 4W	**Enclosure:**	Type 1
Bus Rating & Type:	100A Aluminum	**Neutral Rating:**	100A
Ground Bar:	Std. Bolted Aluminum, Al or Cu cable		
S.C. Rating:	10k A.I.C. Fully Rated		
Main Device Type:	Main Breaker - Top Cable Entry		
Main Terminals:	Mechanical - (1) #8-1/0 (Cu/Al)		
Neutral Terminals:	Mechanical - (1) #14-1/0 (Cu/Al)		
Box Catalog No.:	EZB2048R		
Trim:	EZ Trim, Door in Door, Concealed Hardware (EZT2048S)		
	Surface Mounted		

Box Dimensions:	48.00" [1219.2mm]H x 20.00" [508.0mm]W x 5.75" [146.1mm]
Min. Gutter Size:	Top = 5.5" [139.7mm] Bottom = 5.5" [139.7mm]
	Left = 6.0" [152.4mm] Right = 6.0" [152.4mm]

Panel ID Nameplate:
Type: Plastic, screw-on
Color: White with Black Letters

(1) EMWL1
(2) 208Y/120V 3Ph 4W
(3)

NEC Lighting & Appliance, UL CTL

*****Non-Interchangeable Main Device*****

Sturgeon ELECTRIC
12150 E 112TH AVE, HENDERSON, CO 80640

EATON
Powering Business Worldwide

PANEL SCHEDULE FOR EMWL1

PANEL: **(N) PNL EMWL1**

FEED FROM:	30KVA XFMR	NEUTRAL:	100%	MANUFACTURER:	SEE SPECIFICATIONS
VOLTAGE:	208/120	GROUND:	STANDARD	BUS AMPACITY:	100
PHASE:	3	ENCLOSURE:	NEMA 1	MAIN:	100A MCB
WIRE:	4	MOUNTING:	SURFACE	AIC:	10,000

CKT NO	CKT DESCRIPTION	LOAD VA	LOAD TYPE	CKT BREAKER P	CKT BREAKER A	CKT BREAKER NOTE	CKT BREAKER NOTE	CKT BREAKER A	CKT BREAKER P	LOAD TYPE	LOAD VA	CKT DESCRIPTION	CKT NO
1	VF-1	933	M	3	15			20	1			SPARE	2
3	/	933	M	/	/			20	1	L	384	LTG - BOILER ROOM	4
5	/	933	M	/	/			20	1	O	1200	BOILER CTRL PANEL #1	6
7	CCTV WORKSTATION UPS	1800	O	1	20			20	1	O	1200	BOILER CTRL PANEL #2	8
9	FA FIREWORKS UPS	1800	O	1	20			20	1	O	200	GEN. ANN. PANEL	10
11	FACP - EST3	1800	O	1	20			20	1	O	900	HW SYS. CONTR. PANEL	12
13	CCTV RACKS	1800	O	1	20			20	1	O	200	FLOW METER	14
15	GEN. BATTERY CHARGER	1200	O	1	20			20	1	O	200	BOILER CONTROL VALVES	16
17	GEN. WARMING PAD	1200	O	1	20			30	2	O	1500	GEN. JACKET HEATER	18
19	VF-2	567	M	3	15			/	/	O	1500	/	20
21	/	567	M	/	/			20	1			SPARE	22
23	/	567	M	/	/			20	1			SPARE	24
25	SPD			3	30			-	-			SPACE	26
27	/			/	/			-	-			SPACE	28
29	/			/	/			-	-			SPACE	30

LOAD TYPE	CONNECTED (KVA) A	B	C	TOTAL	DEMAND FACTOR	DEMAND (KVA) A	B	C	TOTAL
LIGHTING (L)	0.0	0.4	0.0	0.4	1.25	0.0	0.5	0.0	0.5
RECEPTACLE (R)	0.0	0.0	0.0	0.0	1.00	0.0	0.0	0.0	0.0
REC (>10000VA) (R)	0.0	0.0	0.0	0.0	0.50	0.0	0.0	0.0	0.0
HEATER (H)	0.0	0.0	0.0	0.0	1.00	0.0	0.0	0.0	0.0
LARGEST MOTOR (M)	0.9	0.9	0.9	2.8	1.25	1.2	1.2	1.2	3.5
REMAIN MOTOR (M)	0.6	0.6	0.6	1.7	1.00	0.6	0.6	0.6	1.7
CONTINUOUS LOAD (CL)	0.0	0.0	0.0	0.0	1.25	0.0	0.0	0.0	0.0
KITCHEN LOADS (K)	0.0	0.0	0.0	0.0	1.00	0.0	0.0	0.0	0.0
SPECIFIC LOADS (S)	0.0	0.0	0.0	0.0	1.00	0.0	0.0	0.0	0.0
NONCOINCIDENTAL (N)	0.0	0.0	0.0	0.0	0.00	0.0	0.0	0.0	0.0
OTHER LOAD (O)	6.5	3.4	6.6	16.5	1.00	6.5	3.4	6.6	16.5
TOTAL DEMAND (KVA)						8.2	5.6	8.3	22.2
SPARE (KVA)						1.8	4.4	1.7	7.8
TOTAL (A/PH)						**68.6**	**46.8**	**69.4**	**61.6**
SPARE (A/PH)						14.7	36.5	13.8	21.7

NOTES:
1. PROVIDE PANEL WITH INTERNALLY MOUNTED TYPE-2, 20kA SURGE PROTECTION DEVICE.

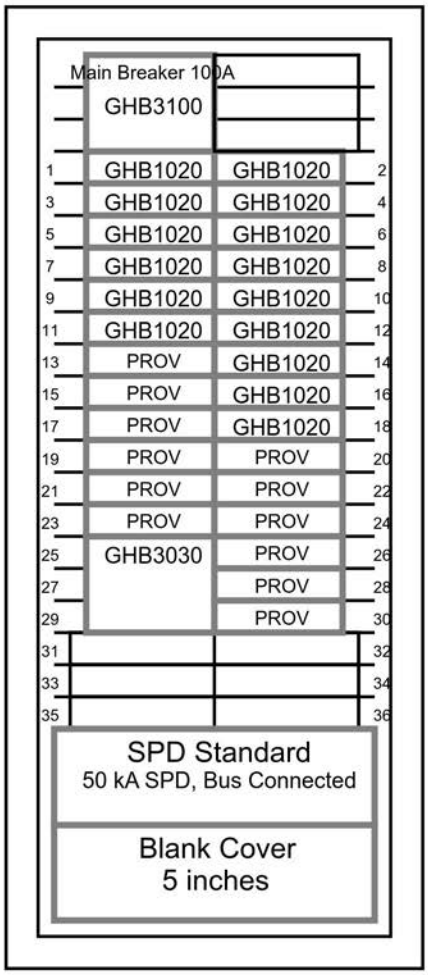

General Information **(Section 1 of 1)**

Service Voltage:	208Y/120V 3Ph 4W	**Enclosure:**	Type 1
Bus Rating & Type:	100A Aluminum	**Neutral Rating:**	100A
Ground Bar:	Std. Bolted Aluminum, Al or Cu cable		
S.C. Rating:	65k A.I.C. Fully Rated		

Main Device Type: Main Breaker - Top Cable Entry
Main Terminals: Mechanical - (1) #10-1/0 (Cu/Al)
Neutral Terminals: Mechanical - (1) #14-1/0 (Cu/Al)
Box Catalog No.: EZB2048R
Trim: EZ Trim, Door in Door, Concealed Hardware (EZT2048S)

Surface Mounted

Box Dimensions: 48.00" [1219.2mm]H x 20.00" [508.0mm]W x 5.75" [146.1mm]D
Min. Gutter Size: Top = 5.5" [139.7mm] Bottom = 5.5" [139.7mm]
Left = 5.75" [146.1mm] Right = 5.75" [146.1mm]

Panel ID Nameplate: **(1) EMEL1**
Type: Plastic, screw-on **(2) 208Y/120V 3Ph 4W**
Color: White with Black Letters **(3)**

NEC Lighting & Appliance, UL CTL *****Non-Interchangeable Main Device*****

Trim Lock: Standard Lock & Key (Keyed WEM2)
Circuit Directory: Metal Frame with Plastic Cover
Box is Made in America.
Main Circuit Breaker Trip Type: Thermal-Magnetic.

Device Modifications:

Ref #	Description

Notes:

Branch Devices

Qty	Poles	Trip	Frame	Amps	kAIC
1	3	30	GHB	100	65
15	1	20	GHB	100	65
12	1		PROV		

The information on this document is created by Eaton Corporation. It is disclosed in confidence and it is only to be used for the purpose in which it is supplied.

PREPARED BY: SUSAN HINTON	DATE: 4/23/2015	**Eaton**			
APPROVED BY:	DATE:	JOB NAME: CDOT - EJMT			
		DESIGNATION: EMEL1			
VERSION: 1.0.0.3		TYPE: PRL2a		DRAWING TYPE: Final	
NEG-ALT Number: DN800129X5K2-R000	REVISION: 0	DWG SIZE: A	G.O.: SDN0598403	ITEM: 003I	SHEET: 1 of 1

Sturgeon ELECTRIC
12150 E 112TH AVE, HENDERSON, CO 80640

EATON
Powering Business Worldwide

PANEL EMEL1

Service Voltage:	208Y/120V 3Ph 4W	**Enclosure:**	Type 1
Bus Rating & Type:	100A Aluminum	**Neutral Rating:**	100A
Ground Bar:	Std. Bolted Aluminum, Al or Cu cable		
S.C. Rating:	65k A.I.C. Fully Rated		
Main Device Type:	Main Breaker - Top Cable Entry		
Main Terminals:	Mechanical - (1) #10-1/0 (Cu/Al)		
Neutral Terminals:	Mechanical - (1) #14-1/0 (Cu/Al)		
Box Catalog No.:	EZB2048R		
Trim:	EZ Trim, Door in Door, Concealed Hardware (EZT2048S)		
	Surface Mounted		

Box Dimensions:	48.00" [1219.2mm]H x 20.00" [508.0mm]W x 5.75" [146.1mm][
Min. Gutter Size:	Top = 5.5" [139.7mm] Bottom = 5.5" [139.7mm]
	Left = 5.75" [146.1mm] Right = 5.75" [146.1mm]

Panel ID Nameplate: **(1) EMEL1**
Type: Plastic, screw-on **(2) 208Y/120V 3Ph 4W**
Color: White with Black Letters **(3)**

NEC Lighting & Appliance, UL CTL ***Non-Interchangeable Main Device***

PANEL SCHEDULE FOR EMEL1

PANEL: **(N) PNL EMEL1**

FEED FROM:	30KVA XFMR	NEUTRAL:	100%	MANUFACTURER:	SEE SPECIFICATIONS
VOLTAGE:	208/120	GROUND:	STANDARD	BUS AMPACITY:	100
PHASE:	3	ENCLOSURE:	NEMA 1	MAIN:	100A MCB
WIRE:	4	MOUNTING:	SURFACE	AIC:	65,000

CKT NO	CKT DESCRIPTION	LOAD VA	LOAD TYPE	CKT BREAKER P	CKT BREAKER A	CKT BREAKER NOTE	CKT BREAKER NOTE	CKT BREAKER A	CKT BREAKER P	LOAD TYPE	LOAD VA	CKT DESCRIPTION	CKT NO
1	FACP - EST3	1800	O	1	20			20	1	O	1800	FACP - EST3	2
3	CCTV RACKS	1800	O	1	20			20	1	O	200	CONTROL VALVES - LL EAS	4
5	CCTV WORKSTATION UPS	1800	O	1	20			20	1	O	1800	CCTV WORKSTATION UPS	6
7	FA WORKSTATION UPS	1800	O	1	20			20	1	O	1800	FA WORKSTATIION UPS	8
9	SPARE			1	20			20	1			SPARE	10
11	SPARE			1	20			20	1			SPARE	12
13	SPACE			-	-			20	1			SPARE	14
15	SPACE			-	-			20	1			SPARE	16
17	SPACE			-	-			20	1			SPARE	18
19	SPACE			-	-			-	-			SPACE	20
21	SPACE			-	-			-	-			SPACE	22
23	SPACE			-	-			-	-			SPACE	24
25	SPD			3	30			-	-			SPACE	26
27	/			/	/			-	-			SPACE	28
29	/			/	/			-	-			SPACE	30

LOAD TYPE	CONNECTED (KVA) A	B	C	TOTAL	DEMAND FACTOR	DEMAND (KVA) A	B	C	TOTAL
LIGHTING (L)	0.0	0.0	0.0	0.0	1.25	0.0	0.0	0.0	0.0
RECEPTACLE (R)	0.0	0.0	0.0	0.0	1.00	0.0	0.0	0.0	0.0
REC (>10000VA) (R)	0.0	0.0	0.0	0.0	0.50	0.0	0.0	0.0	0.0
HEATER (H)	0.0	0.0	0.0	0.0	1.00	0.0	0.0	0.0	0.0
LARGEST MOTOR (M)	0.0	0.0	0.0	0.0	1.25	0.0	0.0	0.0	0.0
REMAIN MOTOR (M)	0.0	0.0	0.0	0.0	1.00	0.0	0.0	0.0	0.0
CONTINUOUS LOAD (CL)	0.0	0.0	0.0	0.0	1.25	0.0	0.0	0.0	0.0
KITCHEN LOADS (K)	0.0	0.0	0.0	0.0	1.00	0.0	0.0	0.0	0.0
SPECIFIC LOADS (S)	0.0	0.0	0.0	0.0	1.00	0.0	0.0	0.0	0.0
NONCOINCIDENTAL (N)	0.0	0.0	0.0	0.0	0.00	0.0	0.0	0.0	0.0
OTHER LOAD (O)	7.2	2.0	3.6	12.8	1.00	7.2	2.0	3.6	12.8
TOTAL DEMAND (KVA)						7.2	2.0	3.6	12.8
SPARE (KVA)						2.8	8.0	6.4	17.2
TOTAL (A/PH)						**60.0**	**16.7**	**30.0**	**35.5**
SPARE (A/PH)						23.3	66.6	53.3	47.7

NOTES:
1. PROVIDE PANEL WITH INTERNALLY MOUNTED TYPE-2, 20kA SURGE PROTECTION DEVICE.

Instruction Data

ANSI/NEMA PB 1.1-2013

General Instructions for Proper Operation of Panelboards Rated 600 Volts or Less

Published by

National Electrical Manufacturers Association
1300 North 17th Street, Suite 900
Rosslyn, Virginia 22209

www.nema.org

Approved: September 11, 2013

© 2014 National Electrical Manufacturers Association. All rights, including translation into other languages, reserved under the Universal Copyright Convention, the Berne Convention for the Protection of Literary and Artistic Works, and the International and Pan American copyright conventions.

NOTICE AND DISCLAIMER
(ANSI Accredited Standards Committee)

The information in this publication was considered technically sound by the consensus of persons engaged in the development and approval of the document at the time it was developed. Consensus does not necessarily mean that there is unanimous agreement among every person participating in the development of this document.

ANSI standards, of which the document contained herein is one, are developed through a voluntary consensus standards development process. This process brings together volunteers and/or seeks out the views of persons who have an interest in the topic covered by this publication. As Secretary of the ANSI Accredited Standards Committee, NEMA administers the process in accordance with the procedures of the American National Standards Institute to promote fairness in the development of consensus. As a publisher of this document, NEMA does not write the document and it does not independently test, evaluate or verify the accuracy or completeness of any information or the soundness of any judgments contained in its standards and guideline publications.

NEMA disclaims liability for any personal injury, property or other damages of any nature whatsoever, whether special, indirect, consequential or compensatory, directly or indirectly resulting from the publication, use of, application, or reliance on this document. NEMA disclaims and makes no guaranty or warranty, express or implied, as to the accuracy or completeness of any information published herein, and disclaims and makes no warranty that the information in this document will fulfill any of your particular purposes or needs. NEMA does not undertake to guarantee the performance of any individual manufacturer's or seller's products or services by virtue of this standard or guide.

In publishing and making this document available, NEMA is not undertaking to render professional or other services for or on behalf of any person or entity. Nor is NEMA undertaking to perform any duty owed by any person or entity to someone else. Anyone using this document should rely on his or her own independent judgment or, as appropriate, seek the advice of a competent professional in determining the exercise of reasonable care in any given circumstances. Information and other standards on the topic covered by this publication may be available from other sources, which the user may wish to consult for additional views or information not covered by this publication.

NEMA has no power, nor does it undertake to police or enforce compliance with the contents of this document. NEMA does not certify, test or inspect products, designs or installations for safety or health purposes. Any certification or other statement of compliance with any health or safety–related information in this document shall not be attributable to NEMA and is solely the responsibility of the certifier or maker of the statement.

TABLE OF CONTENTS

Page

Foreword iv

SCOPE **1**

REFERENCES **2**

GENERAL **3**

SUCCESSFUL OPERATION OF PANELBOARDS 3
QUALIFIED PERSONNEL 3
DEFINITION OF QUALIFIED PERSONNEL 3
Requirements 3
Established Safety Practices 3
Protective Equipment 3
First Aid 3
SUITABLE RATINGS 4

STEPS TO BE TAKEN BEFORE ENERGIZING **5**

ACCESSIBLE ELECTRICAL CONNECTIONS 5
BLOCKS AND PACKING MATERIALS 5
SWITCHES, CIRCUIT BREAKERS, AND OTHER OPERATING MECHANISMS 5
SHORT CIRCUITS AND GROUND FAULTS 5
GROUND FAULT PROTECTION SYSTEM 5
ADJUSTABLE TIME CURRENT TRIP DEVICE SETTINGS 5
GROUNDING CONNECTIONS 5
FOREIGN MATERIAL 6

ENERGIZING EQUIPMENT **7**

QUALIFIED PERSONNEL 7
LOAD ON THE PANELBOARD 7
ENERGIZED IN SEQUENCE 7
LOADS SUCH AS LIGHTING CIRCUITS, CONTACTORS, HEATERS, AND MOTORS 7

MAINTENANCE **8**

MAINTENANCE PROGRAM 8
PANELBOARD WHICH HAS BEEN CARRYING ITS REGULAR LOAD FOR AT LEAST 3 HOURS 8
INSPECT PANELBOARD ONCE EACH YEAR 8
ACCUMULATION OF DUST AND DIRT 8
Visible Electrical Joints and Terminals 8
Conductors and Connections 8
Fuse Clip Contact Pressure and Contact Means 9
Plug Fuses 9
Conditions Which Caused Overheating 9
PROPER AMPERE, VOLTAGE, AND INTERRUPTING RATINGS 9
Mechanisms Free and in Proper Working Order 9

© 2014 National Electrical Manufacturers Association

OPERATION OF ALL MECHANICAL COMPONENTS 9
Switch Operating Mechanisms 9
Integrity of Electrical and Mechanical Interlocks 9
Missing or Broken Parts 9
Manufacturer's Instructions 9
Accessible Copper Electrical Contacts, Blades, and Jaws 10
DAMAGED INSULATING MATERIAL AND ASSEMBLIES 10
MOISTURE OR SIGNS OF PREVIOUS WETNESS OR DRIPPING 10
Conduits Which Have Dripped Condensate 10
Cracks or Openings 10
Insulating Material Which is Damp or Wet 10
Component Devices Which Show Evidence of Moisture Damage 10
BEFORE CLEANUP AND CORRECTIVE ACTION IS ATTEMPTED 10
SEVERE ELECTRICAL SHORT CIRCUIT 11
GROUND FAULT PROTECTION SYSTEM 11
INSULATION RESISTANCE 11
Panelboard Exposed to High Humidity 11
PERMISSIBLE LOADING OF PANELBOARDS 12
NATIONAL ELECTRICAL CODE® 12
HARMONICS IN ELECTRICAL SYSTEM 12

© 2014 National Electrical Manufacturers Association

Foreword

This publication is a guide of practical information containing instructions for the proper installation, operation, and maintenance of panelboards rated 600 volts or less.

These instructions do not purport to cover all details or variations in equipment, nor to provide for every possible contingency regarding installation, operation, or maintenance.

It is recommended that work described in this set of instructions be performed only by qualified personnel familiar with the construction and operation of panelboards and that such work be performed only after reading this complete set of instructions. For specific information not covered by these instructions, you are urged to contact the manufacturer of the panelboard directly.

In the preparation of this standards publication input of users and other interested parties has been sought and evaluated. Inquiries, comments, and proposed or recommended revisions should be submitted to the concerned NEMA product section by contacting the following: These recommendations will be reviewed periodically and updated as necessary.

Senior Technical Director, Operations
National Electrical Manufacturers Association
1300 North 17th Street, Suite 900
Rosslyn, Virginia 22209

Publication PB 1.1- 2013 revises and supersedes PB 1.1-2007.

This standards publication was developed by the Panelboard and Distribution Board Product Group of the LVDE Section. Product Group approval of the standard does not necessarily imply that all Product Group members voted for its approval or participated in its development. At the time it was approved, the Product Group was composed of the following members:

Eaton Corporation.—Pittsburgh, PA
GE Industrial Solutions—Plainville, CT
Hubbell, Inc.—Orange, CT
Milbank Manufacturing Company—Kansas City, MO
Penn Panel & Box Company—Collingdale, PA
Reliance Controls Corporation—Racine, WI
Siemens Industry, Inc.—Norcross, GA
Schneider Electric —Palatine, IL

© 2014 National Electrical Manufacturers Association

Section 1
SCOPE

This publication covers single panelboards or groups of panel units suitable for assembly in the form of single panelboards, including buses, and with or without switches or automatic overload protective devices (fuses or circuit breakers), or both. These units are used in the distribution of electricity at 600 volts and less with:

1600—ampere mains or less
1200—ampere branch circuits or less

Specifically excluded are live-front panelboards, panelboards employing cast enclosures for special service conditions, and panelboards designed primarily for residential and light commercial service equipment.

© 2014 National Electrical Manufacturers Association

Section 2
REFERENCES

National Fire Protection Association (NFPA)
Batterymarch Park
Quincy, MA 02269

NFPA 70	*National Electrical Code®*
NFPA 70E	*Standard for Electrical Safety in the Workplace*

National Electrical Manufacturers Association (NEMA)
1300 North 17th Street, Suite 900
Rosslyn, Virginia 22209

AB 4	*Guidelines for Inspection and Preventative Maintenance of Molded Case Circuit Breakers Used in Commercial and Industrial Applications*
PB 2.2	*Application Guide for Ground Fault Protective Devices for Equipment*
	Guidelines for Handling Water Damaged Electrical Products

© 2014 National Electrical Manufacturers Association

Section 3
GENERAL

WARNING—HAZARDOUS VOLTAGES IN ELECTRICAL EQUIPMENT CAN CAUSE SEVERE PERSONAL INJURY OR DEATH. UNLESS OTHERWISE SPECIFIED, INSPECTION AND MAINTENANCE SHOULD ONLY BE PERFORMED ON PANELBOARDS AND EQUIPMENT TO WHICH POWER HAS BEEN TURNED OFF, DISCONNECTED AND ELECTRICALLY ISOLATED SO THAT NO ACCIDENTAL CONTACT CAN BE MADE WITH ENERGIZED PARTS. FOLLOW ALL MANUFACTURER'S WARNINGS AND INSTRUCTIONS.

Safety-related work practices, as described in NFPA 70E, should be followed at all times.
All requirements of the *National Electrical Code*® NFPA 70 should be followed.

CAUTION—HYDROCARBON SPRAY PROPELLANTS AND HYDROCARBON BASED SPRAYS OR COMPOUNDS WILL CAUSE DEGRADATION OF CERTAIN PLASTICS. CONTACT THE PANELBOARD MANUFACTURER BEFORE USING THESE PRODUCTS TO CLEAN, DRY, OR LUBRICATE COMPONENTS DURING INSTALLATION OR MAINTENANCE.

3.1 SUCCESSFUL OPERATION OF PANELBOARDS

The successful operation of panelboards is dependent upon proper installation, operation, and maintenance. Neglecting fundamental installation and maintenance requirements may lead to personal injury, death, or damage to electrical equipment or other property.

3.2 QUALIFIED PERSONNEL

Installation, operation, and maintenance of panelboards should be conducted only by qualified personnel.

3.3 DEFINITION OF QUALIFIED PERSONNEL

For purposes of these guidelines, a qualified person is one who is familiar with the installation, construction, and operation of the equipment and the hazards involved. In addition, the person is:

3.3.1 Requirements

Knowledgeable of the requirements of the *National Electrical Code*® and of all other applicable codes, laws, and standards.

3.3.2 Established Safety Practices

Trained and authorized to test, energize, clear, ground, tag, and lockout circuits and equipment in accordance with established safety practices.

3.3.3 Protective Equipment

Trained in the proper care and use of protective equipment such as rubber gloves, hard hat, safety glasses or face shields, and flash resistant clothing in accordance with established safety practices.

3.3.4 First Aid

Trained in rendering first aid.

© 2014 National Electrical Manufacturers Association

3.4 SUITABLE RATINGS

Verify that all equipment being installed has ratings suitable for the installation.

© 2014 National Electrical Manufacturers Association

STEPS TO BE TAKEN BEFORE ENERGIZING

ACCESSIBLE ELECTRICAL CONNECTIONS

Tighten all accessible electrical connections to the manufacturer's torque specifications. If such information is not provided with the equipment, consult the manufacturer.

BLOCKS AND PACKING MATERIALS

Make certain that all blocks and packing materials used for shipment have been removed from all component devices and the panelboard.

SWITCHES, CIRCUIT BREAKERS, AND OTHER OPERATING MECHANISMS

Manually exercise all switches, circuit breakers, and other operating mechanisms to make certain they operate freely. If devices with self-test function are installed, perform test and verify proper operation per the manufacturer's instructions.

Check the integrity of all electrical and mechanical interlocks and padlocking mechanisms. For key interlocked systems, assure that only the required number of keys are accessible to the operator.

SHORT CIRCUITS AND GROUND FAULTS

To make sure that the system is free from short circuits and ground faults, conduct an insulation resistance test phase to ground and phase to phase with the switches or circuit breakers in both the open and closed positions. If the resistance reads less than 1 megohm while testing with the branch circuit devices in the open position, the system may be unsafe and should be investigated. If after investigation and possible correction, low readings are still observed, the manufacturer should be contacted. Some electronic equipment (metering, SPD, etc.) may be damaged by this testing. Refer to the manufacturers equipment markings for guidelines.

GROUND FAULT PROTECTION SYSTEM

Test the ground fault protection system (if furnished) in accordance with the manufacturer's instructions. See Section 230.95 of the *National Electrical Code®* and NEMA PB 2.2, *Application Guide for Ground Fault Protective Devices for Equipment.*

ADJUSTABLE TIME CURRENT TRIP DEVICE SETTINGS

Set any adjustable time current trip device settings to the proper values.

NOTE—Experience has indicated that damage from overcurrent can be reduced if the devices used for overload and short-circuit protection are set to operate instantaneously (that is, without intentional time delay) at 115 percent of the highest value of phase current which is likely to occur as the result of any anticipated motor starting or welding currents.

GROUNDING CONNECTIONS

Check to determine that all grounding connections are properly made. If the panelboard is used as service equipment, make certain that the neutral, if present, is properly bonded to the cabinet.

© 2014 National Electrical Manufacturers Association

FOREIGN MATERIAL

Remove all foreign material from the panelboard and cabinet before installing the cabinet front. Make certain that all deadfront shields are properly aligned and tightened.

© 2014 National Electrical Manufacturers Association

ENERGIZING EQUIPMENT

WARNING—HAZARDOUS VOLTAGES IN ELECTRICAL EQUIPMENT CAN CAUSE SEVERE PERSONAL INJURY OR DEATH. ENERGIZING A PANELBOARD FOR THE FIRST TIME AFTER INITIAL INSTALLATION OR MAINTENANCE IS POTENTIALLY DANGEROUS.

QUALIFIED PERSONNEL

Only qualified personnel should energize equipment for the first time. If short circuit conditions caused by damage or poor installation practices have not been detected in the procedures specified in Section 7, serious personal injury and damage can occur when the power is turned on.

LOAD ON THE PANELBOARD

There should be no load on the panelboard when it is energized. Turn off all of the downstream loads.

ENERGIZED IN SEQUENCE

The equipment should be energized in sequence by starting at the source end of the system and working towards the load end. In other words, energize the main devices, then the feeder devices, and then the branch-circuit devices. Turn the devices on with a firm positive motion.

LOADS SUCH AS LIGHTING CIRCUITS, CONTACTORS, HEATERS, AND MOTORS

After all main, feeder, and branch circuit devices have been closed, loads such as lighting circuits, contactors, heaters, and motors may be turned on.

© 2014 National Electrical Manufacturers Association

MAINTENANCE

MAINTENANCE PROGRAM

A maintenance program for panelboards should be conducted on a regularly scheduled basis in accordance with the following:

PANELBOARD WHICH HAS BEEN CARRYING ITS REGULAR LOAD FOR AT LEAST 3 HOURS

A panelboard which has been carrying its regular load for at least 3 hours just prior to inspection should be field tested by feeling the deadfront surfaces of circuit breakers, switches, interior trims, doors, and enclosure sides with the palm of the hand. If the temperature of these surfaces does not permit you to maintain contact for at least 3 seconds, this may be an indication of trouble and investigation is necessary. Thermographic (infrared) scanning has become a useful method of investigating thermal performance.

WARNING—HAZARDOUS VOLTAGES IN ELECTRICAL EQUIPMENT CAN CAUSE SEVERE PERSONAL INJURY OR DEATH. UNLESS OTHERWISE SPECIFIED, INSPECTION AND MAINTENANCE SHOULD ONLY BE PERFORMED ON PANELBOARDS TO WHICH POWER HAS BEEN TURNED OFF, DISCONNECTED AND ELECTRICALLY ISOLATED SO THAT NO ACCIDENTAL CONTACT CAN BE MADE WITH ENERGIZED PARTS. FOLLOW ALL MANUFACTURER'S WARNINGS AND INSTRUCTIONS.

Safety related work practices, as described in NFPA 70E, should be followed at all times.

CAUTION—HYDROCARBON SPRAY PROPELLANTS AND HYDROCARBON BASED SPRAYS OR COMPOUNDS WILL CAUSE DEGRADATION OF CERTAIN PLASTICS. CONTACT THE PANELBOARD MANUFACTURER BEFORE USING THESE PRODUCTS TO CLEAN, DRY, OR LUBRICATE PANELBOARD COMPONENTS DURING INSTALLATION OR MAINTENANCE.

INSPECT PANELBOARD ONCE EACH YEAR

Inspect the panelboard once each year or after any severe short circuit.

ACCUMULATION OF DUST AND DIRT

If there is an accumulation of dust and dirt, clean out the panelboard by using a brush, vacuum cleaner, or clean lint-free rags. Avoid blowing dust into circuit breakers or other components. Do not use a blower or compressed air.

Visible Electrical Joints and Terminals

Carefully inspect all visible electrical joints and terminals in the bus and wiring system.

Conductors and Connections

Visually check all conductors and connections to be certain that they are clean and secure. Loose and/or contaminated connections increase electrical resistance which can cause overheating. Such overheating is indicated by discoloration or flaking of insulation and/or metal parts. Pitting or melting of connecting surfaces is a sign of arcing due to a loose or otherwise poor connection. Parts which show evidence of overheating or looseness should be cleaned and re-torqued or replaced if damaged. Tighten bolts and nuts at bus joints to manufacturer's torque specifications.

© 2014 National Electrical Manufacturers Association

CAUTION—DO NOT REMOVE PLATING FROM ALUMINUM PARTS IN JOINTS OR TERMINATIONS. DAMAGE TO PLATING CAN RESULT IN OVERHEATING. REPLACE DAMAGED ALUMINUM PARTS.

Fuse Clip Contact Pressure and Contact Means

Examine fuse clip contact pressure and contact means. If there is any sign of overheating or looseness, follow the manufacturer's maintenance instructions or replace the fuse clips. Loose fuse clips can result in overheating.

Plug Fuses

Re-tighten plug fuses.

Conditions Which Caused Overheating

Be sure that all conditions which caused the overheating have been corrected.

PROPER AMPERE, VOLTAGE, AND INTERRUPTING RATINGS

Check circuit breakers, switches, and fuses to ensure they have the proper ampere, voltage, and interrupting ratings. Ensure that non-current-limiting devices are not used as replacements for current-limiting devices. Never attempt to defeat rejection mechanisms which are provided to prevent the installation of the incorrect class of fuse.

Mechanisms Free and in Proper Working Order

Operate each switch or circuit breaker several times to ensure that all mechanisms are free and in proper working order. Replace as required. See NEMA AB-4 for maintenance of molded case circuit breakers.

OPERATION OF ALL MECHANICAL COMPONENTS

Check the operation of all mechanical components. Replace as required.

Switch Operating Mechanisms

Exercise switch operating mechanisms and external operators for circuit breakers to determine that they operate freely to their full on and off positions.

Integrity of Electrical and Mechanical Interlocks

Check the integrity of all electrical and mechanical interlocks and padlocking mechanisms. For key interlocked systems, assure that only the required number of keys are accessible to the operator.

Missing or Broken Parts

Whenever practical, check all devices for missing or broken parts, proper spring tension, free movement, corrosion, dirt, and excessive wear.

Manufacturer's Instructions

Adjust, clean, and lubricate or replace parts according to the manufacturer's instructions.

Clean Nonmetallic Light Grease or Oil

Use *clean* nonmetallic light grease or oil as instructed.

Molded Case Circuit Breakers

Do *not* oil or grease parts of molded case circuit breakers.

© 2014 National Electrical Manufacturers Association

Clean, Light Grease

If no instructions are given on the devices, sliding copper contacts, operating mechanisms, and interlocks may be lubricated with clean, light grease.

Excess Lubrication

Wipe off excess lubrication to avoid contamination.

CAUTION—HYDROCARBON SPRAY PROPELLANTS AND HYDROCARBON BASED SPRAYS OR COMPOUNDS WILL CAUSE DEGRADATION OF CERTAIN PLASTICS. CONTACT THE PANELBOARD MANUFACTURER BEFORE USING THESE PRODUCTS TO CLEAN, DRY, OR LUBRICATE PANELBOARD COMPONENTS DURING INSTALLATION OR MAINTENANCE.

Accessible Copper Electrical Contacts, Blades, and Jaws

Clean and dress readily accessible copper electrical contacts, blades, and jaws according to the manufacturer's instructions when inspection indicates the need.

DAMAGED INSULATING MATERIAL AND ASSEMBLIES

Look for and replace damaged insulating material and assemblies where sealing compounds have deteriorated.

MOISTURE OR SIGNS OF PREVIOUS WETNESS OR DRIPPING

Look for any moisture or signs of previous wetness or dripping inside the cabinet.

NOTE—Condensation in conduits or dripping from outside sources is one known cause of panelboard malfunction.

Conduits Which Have Dripped Condensate

Seal off any conduits which have dripped condensate, and provide means for further condensate to drain away from the panelboard.

Cracks or Openings

Seal off any cracks or openings which have allowed moisture to enter the enclosure. Eliminate the source of any dripping on the enclosure and any other source of moisture.

Insulating Material Which is Damp or Wet

Replace or thoroughly dry and clean any insulating material, which is damp or wet or shows an accumulation of deposited material from previous wettings.

Component Devices Which Show Evidence of Moisture Damage

Inspect all component devices. Replace any component device which shows evidence of moisture damage or has been subjected to water damage or flooding. Additional information may be found in the NEMA document "Guidelines for Handling Water Damaged Electrical Products."

BEFORE CLEANUP AND CORRECTIVE ACTION IS ATTEMPTED

In the event of water damage, e.g., flooding or sprinkler discharge, the manufacturer should be consulted before clean up and corrective action is attempted.

© 2014 National Electrical Manufacturers Association

SEVERE ELECTRICAL SHORT CIRCUIT

If a severe electrical short circuit has occurred, the excessive currents may have resulted in structural component and/or bus and conductor damage due to mechanical distortion, thermal damage, metal deposits, or smoke. Examine all devices and bus supports for cracks or breakage. The manufacturer should be consulted before cleanup and correction is attempted.

GROUND FAULT PROTECTION SYSTEM

Test the ground fault protection system (if furnished) in accordance with the manufacturer's instructions. See Section 230.95 of the *National Electrical Code®* and NEMA PB 2.2 *Application Guide for Ground Fault Protective Devices for Equipment.*

INSULATION RESISTANCE

Check insulation resistance (see 7.4) under any of the following conditions:

Severe Short Circuit

If a severe short circuit has occurred (see 10.10);

Parts Replaced

If it has been necessary to replace parts or clean insulating surfaces;

Panelboard Exposed to High Humidity

If the panelboard has been exposed to high humidity, condensation, or dripping moisture.

© 2014 National Electrical Manufacturers Association

PERMISSIBLE LOADING OF PANELBOARDS

NATIONAL ELECTRICAL CODE®

In compliance with the *National Electrical Code®*, the normal continuous loads (3 hours or more) of panelboard circuits should be not more than 80 percent of the rating of the overcurrent protective device, unless the marking of the device indicates that it is suitable for continuous duty at 100 percent of its rating.

HARMONICS IN ELECTRICAL SYSTEM

Some types of electrical equipment cause harmonics in the electrical system, which may result in overheating. This condition should be considered when determining panelboard loading.

§

© 2014 National Electrical Manufacturers Association

Component Data

1 **Product Selection**

QUICKLAG Type BAB Single-Pole

QUICKLAG Type: BA 10,000A Interrupting Capacity Thermal-Magnetic Breakers

Continuous Ampere Rating at 40°C	Single-Pole 120/240 Vac Catalog Number	Two-Pole 120/240 Vac Catalog Number	Two-Pole 240 Vac Catalog Number	Three-Pole 240 Vac Catalog Number
10	BAB1010	BAB2010	BAB2010H ③	BAB3010H ③
15	BAB1015 ①②	BAB2015	BAB2015H	BAB3015H
20	BAB1020 ①②	BAB2020	BAB2020H	BAB3020H
25	BAB1025	BAB2025	BAB2025H	BAB3025H
30	BAB1030	BAB2030	BAB2030H	BAB3030H
35	BAB1035	BAB2035	BAB2035H	BAB3035H
40	BAB1040	BAB2040	BAB2040H	BAB3040H
45	BAB1045	BAB2045	BAB2045H	BAB3045H
50	BAB1050	BAB2050	BAB2050H	BAB3050H
55	BAB1055	BAB2055	BAB2055H	BAB3055H
60	BAB1060	BAB2060	BAB2060H	BAB3060H
70	BAB1070	BAB2070	BAB2070H	BAB3070H
80	—	BAB2080	BAB2080H	BAB3080H
90	—	BAB2090	BAB2090H	BAB3090H
100	BAB1100	BAB2100	BAB2100H	BAB3100H
110	—	BAB2110	—	—
125	—	BAB2125	—	—

QUICKLAG Type: BA Non-Automatic Switches

Continuous Ampere Rating at 40°C	Single-Pole 120/240 Vac Catalog Number	Two-Pole 120/240 Vac Catalog Number	Two-Pole 240 Vac Catalog Number	Three-Pole 240 Vac Catalog Number
50	BAB1050N	—	BAB2050N	BAB3050N
60	BAB1060N	—	BAB2060N	BAB3060N
100	BAB1100N	—	BAB2100N	BAB3100N

QUICKLAG Type: QBHW 22,000A Interrupting Capacity Thermal-Magnetic Breakers

Continuous Ampere Rating at 40°C	Single-Pole 120/240 Vac Catalog Number	Two-Pole 120/240 Vac Catalog Number	Two-Pole 240 Vac Catalog Number	Three-Pole 240 Vac Catalog Number
15	QBHW1015 ①	QBHW2015	QBHW2015H	QBHW3015H
20	QBHW1020 ①	QBHW2020	QBHW2020H	QBHW3020H
25	QBHW1025	QBHW2025	QBHW2025H	QBHW3025H
30	QBHW1030	QBHW2030	QBHW2030H	QBHW3030H
35	QBHW1035	QBHW2035	QBHW2035H	QBHW3035H
40	QBHW1040	QBHW2040	QBHW2040H	QBHW3040H
45	QBHW1045	QBHW2045	QBHW2045H	QBHW3045H
50	QBHW1050	QBHW2050	QBHW2050H	QBHW3050H
55	QBHW1055	QBHW2055	QBHW2055H	QBHW3055H
60	QBHW1060	QBHW2060	QBHW2060H	QBHW3060H
70	QBHW1070	QBHW2070	QBHW2070H	QBHW3070H
80	—	QBHW2080	QBHW2080H	QBHW3080H
90	—	QBHW2090	QBHW2090H	QBHW3090H
100	—	QBHW2100	QBHW2100H	QBHW3100H
110	—	QBHW2110	—	—
125	—	QBHW2125	—	—

Notes

① Switching duty rated for 120 Vac fluorescent light applications.
② For special low-magnetic breaker, order **BAB1015L1** or **BAB1020L1**.
③ Not UL listed.

QUICKLAG Type: HBAX 42,000A Interrupting Capacity Thermal-Magnetic Breakers

Continuous Ampere Rating at 40°C	Single-Pole 120/240 Vac Catalog Number	Two-Pole 120/240 Vac Catalog Number	Two-Pole 240 Vac Catalog Number	Three-Pole 240 Vac Catalog Number
15	HBAX1015 ①	HBAX2015	—	HBAX3015H
20	HBAX1020 ①	HBAX2020	—	HBAX3020H
25	HBAX1025	HBAX2025	—	HBAX3025H
30	HBAX1030	HBAX2030	—	HBAX3030H
35	HBAX1035	HBAX2035	—	HBAX3035H
40	HBAX1040	HBAX2040	—	HBAX3040H
45	HBAX1045	HBAX2045	—	HBAX3045H
50	HBAX1050	HBAX2050	—	HBAX3050H
55	HBAX1055	HBAX2055	—	HBAX3055H
60	HBAX1060	HBAX2060	—	HBAX3060H
70	HBAX1070	HBAX2070	—	HBAX3070H
80	—	HBAX2080	—	HBAX3080H
80	—	HBAX2080	—	HBAX3080H
90	—	HBAX2090	—	HBAX3090H
100	—	HBAX2100	—	HBAX3100H

QUICKLAG Type: HBAW 65,000A Interrupting Capacity Thermal-Magnetic Breakers

Continuous Ampere Rating at 40°C	Single-Pole 120/240 Vac Catalog Number	Two-Pole 120/240 Vac Catalog Number	Two-Pole 240 Vac Catalog Number	Three-Pole 240 Vac Catalog Number
15	HBAW1015 ①	HBAW2015	—	HBAW3015H
20	HBAW1020 ①	HBAW2020	—	HBAW3020H
25	HBAW1025	HBAW2025	—	—
30	HBAW1030	HBAW2030	—	—

Dimensions

Approximate Dimensions in Inches (mm)

Shipping Data

Number of Poles	Carton Quantity	Approximate Weight Lbs (kg)	Dimensions
1	24	9.00 (4.1)	12.50 x 7.50 x 5.00 (317.5 x 190.5 x 127.0)
2	12	9.00 (4.1)	12.50 x 7.50 x 5.00 (317.5 x 190.5 x 127.0)
3	8	9.00 (4.1)	12.50 x 7.50 x 5.00 (317.5 x 190.5 x 127.0)

Note

① Switching duty rated for 120 Vac fluorescent light applications.

Powering Business Worldwide

Instruction Manual IM01005019E - Rev. 5 Effective November 2013

Eaton SPD Series

Surge Protective Device

For Integrated Units

Powering Business Worldwide

Table of Contents

1.0 Introduction 1
1.1 Manual Organization 1
1.2 Product Overview 1
1.3 Safety Precautions 1
1.4 Catalog Numbering System 1
1.5 Equipment Testing 2

2.0 Installation 2
2.1 Preparation for Installation 2
2.2 Installation Locations 2
2.2.1 Direct Bus Mount Applications 2
2.2.2 Connected Through a Circuit Breaker Applications 2
2.3 Installation Procedures 2
2.3.1 Direct Bus Mount Applications 2
2.3.2 Connected Through a Circuit Breaker Applications 5

3.0 Operating Features 6
3.1 General 6
3.2 Displays and Indicators 6
3.2.1 Basic Feature Package 6
3.2.2 Standard Feature Package 7
3.2.3 Standard With Surge Counter Feature Package 7
3.2.4 SPD Display Rotation 8
3.3 Remote Display Panel (RDP) Option 8
3.4 IEC Approved Models 8

4.0 Troubleshooting 8

5.0 Specifications 10

6.0 Ordering Guidelines 11

7.0 Warranty 12

Eaton is a registered trademark of Eaton Corporation or its subsidiaries and affiliates. National Electric Code and NEC are registered trademarks of the National Fire Protection Association. Power Chain Management is a registered trademark of Eaton Corporation, UL is a federally registered trademark of Underwriters Laboratories, Inc. All other trademarks are property of their respective companies.

1.0 Introduction

1.1 Manual Organization

This Installation Manual describes the safe installation, testing and operation of the Eaton® SPD Series Surge Protective Device (SPD).

This manual is organized into seven sections, as follows:

1.0 Introduction

2.0 Installation

3.0 Operating Features

4.0 Troubleshooting

5.0 Specifications

6.0 Ordering Guidelines

7.0 Warranty

1.2 Product Overview

The Eaton SPD Series protects critical electrical and electronic equipment from damage by power surges. This is done by shunting high energy lightning surges (and other transient disturbances) away from the equipment being protected. It does this in nanoseconds by providing a low impedance surge path to ground while supporting power frequency voltage.

The Eaton SPD Series is designed to mount on Panelboards, Switchgear, Switchboards, Busway, and Motor Control Centers (MCCs). It is available with surge current capacity ratings from 50 to 400kA.

The Eaton SPD Series is available in three feature packages (Basic, Standard, and Standard with Surge Counter), as described in Section 3, "Operating Features." Each model is available in Delta, Wye, and Split Phase wiring configurations.

All Eaton SPD Series models have been tested and certified by Underwriter's Laboratory (UL®), to comply with UL Standard 1449, 3rd Edition.

Eaton's One-Port low-voltage Surge Protective Device Wye Models SPD120480Y2C, SPD160480Y2C, SPD200480Y2C and Delta Models SPD120480D2C, SPD160480D2C, SPD200480D2C, SPD200480D2C meet the requirements of IEC 61643-11 / EN 61643-11, Part 11: Test Class II, and are intended to be installed in indoor applications with a degree of protection rated IP 00.

1.3 Safety Precautions

A licensed/qualified electrician must complete all instructions in this manual in accordance with the National Electric Code (NEC®), state, and local codes, or other applicable country codes. All applicable local electrical codes supersede these instructions.

⚠WARNING

IMPROPER INSTALLATION COULD CAUSE DEATH, INJURY AND EQUIPMENT DAMAGE. FOLLOW ALL WARNINGS AND CAUTIONS. COMPLETELY READ AND UNDERSTAND THE INFORMATION IN THIS INSTRUCTION MANUAL BEFORE ATTEMPTING TO INSTALL OR OPERATE THIS EQUIPMENT.

IMPROPER WIRING COULD CAUSE DEATH, INJURY AND/OR EQUIPMENT DAMAGE. ONLY LICENSED/QUALIFIED ELECTRICIANS WHO ARE TRAINED IN THE INSTALLATION AND SERVICE OF ELECTRICAL SERVICES ARE TO INSTALL AND SERVICE THIS EQUIPMENT.

HAZARDOUS VOLTAGES ARE PRESENT INSIDE THE SPD DURING NORMAL OPERATION. FOLLOW ALL SAFE WORK PRACTICES TO AVOID ELECTRICAL SHOCK.

⚠WARNING

ARC FLASH DURING INSTALLATION COULD CAUSE INJURY. USE APPROPRIATE SAFETY PRECAUTIONS AND EQUIPMENT FOR ARC FLASH PROTECTION.

1.4 Catalog Numbering System

Each Eaton SPD Series unit has a name plate that identifies the parameters used for manufacture. These parameters are expressed in letters and numbers, to reflect the Series, kA Rating, Voltage Code, Feature Package, and Application.

Table 1. Catalog Numbering System

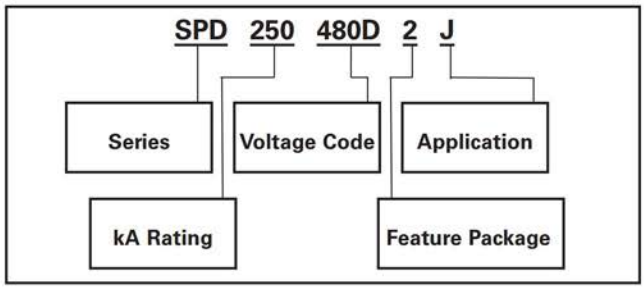

For example, a 480 volt Delta (3-wire plus Ground) for use in an MCC application requires an SPD model SPD 250480D2J, where:

SPD = SPD model,

250 = the kA rating (50 – 400 kA),

480D = the voltage,

2 = the feature package (Basic, Standard, Standard With Surge Counter), and,

J = the Application Suffix (such as Direct Bus Mounted in a panelboard or Connected Through a Circuit Breaker).

These numbers appear as part of the product label attached to the front left side of the SPD. See Figure 1.

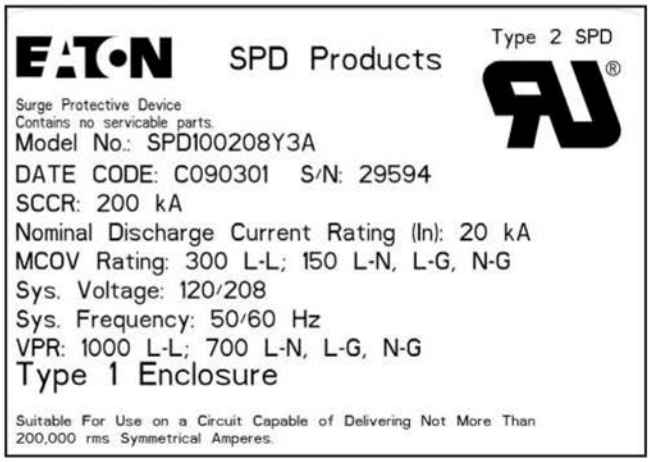

Figure 1. Product Label

1.5 Equipment Testing

⚠WARNING

CONDUCTING DIELECTRIC, MEGGER, OR HI-POTENTIAL TESTING WITH THE SPD INSTALLED WILL CAUSE INTERNAL DAMAGE TO THE SPD. THE SPD WILL ALSO CAUSE THE TEST TO FAIL.

Every Eaton SPD Series unit is tested at the factory for dielectric breakdown. No further SPD testing is required for installation.

If you desire to test distribution equipment by performing dielectric, megger, or hi-potential tests, any installed SPD **must** be disconnected from the power distribution system to prevent damage to the unit.

Follow this procedure to safely disconnect the SPD:

1. Remove bus connected SPDs completely from the installation prior to performing any form of hi-potential testing.
2. Isolate SPDs connected via conductors as follows:
   a. 3-wire delta SPDs: Turn off the circuit breaker to isolate the SPD, if connected through a circuit breaker.
   b. Wye connected SPDs: Turn off the circuit breaker **and** remove the Neutral connection.
3. Remove MCC units with SPDs from the MCC structure.

2.0 Installation

⚠WARNING

INSTALLING AN SPD THAT IS IMPROPERLY RATED FOR THE ELECTRICAL SYSTEM VOLTAGE COULD CREATE A POTENTIALLY HAZARDOUS CONDITION, RESULTING IN INJURY OR EQUIPMENT DAMAGE.

2.1 Preparation for Installation

⚠CAUTION

EATON SPD SERIES PRODUCTS MUST BE INSTALLED OR REPLACED BY A QUALIFIED ELECTRICIAN TO AVOID INJURY OR EQUIPMENT DAMAGE.

Before installing an Eaton SPD Series unit, do the following:

- Verify that the area is clear of any dirt, debris or clutter that may hamper the installation process.
- Verify that there is enough space in the cabinet or MCC to install the SPD. See Section 2.3, "Installation Procedures" for dimensions.
- Confirm that all tools and equipment needed for the installation are available.
- Confirm that the system voltage and wiring configuration is the same as the SPD you are installing. Check the voltage rating label on the front left side of the SPD. See Figure 1.

⚠WARNING

TURN OFF THE POWER SUPPLY BEFORE WORKING IN ANY ELECTRICAL CABINET OR ON ANY CIRCUIT BREAKER PANEL. FAILURE TO DO SO COULD RESULT IN INJURY OR DEATH FROM ELECTRICAL SHOCK.

NOTICE

A POOR GROUND, OR GROUNDING/BONDING VIOLATIONS, COULD PREVENT THE SPD FROM PERFORMING AS SPECIFIED.

DO NOT USE THE SPD TO CARRY OR PASS THROUGH GROUND TO OTHER DEVICES OR LEADS. DAMAGE TO THE EQUIPMENT MAY RESULT.

- Check the facility grounding system. All grounding, bonding, and earthing must meet the NEC and any other national, state and local electrical codes.

2.2 Installation Locations

Eaton's SPD Series can be installed directly to the bus for Panelboard applications.

The SPD can also be connected through a circuit breaker for installations in Panelboards, Switchboards, Switchgear, MCC's and Busway applications.

Follow these guidelines to determine the best location for mounting this product.

2.2.1 Direct Bus Mount Applications

- Install the SPD on the load side of the main breaker. Connect the SPD directly to the bus located as close as possible to the main breaker.

2.2.2 Connected Through a Circuit Breaker Applications

- Install the SPD next to the first breaker after the incoming main lugs or main breaker.

2.3 Installation Procedures

2.3.1 Direct Bus Mount Applications

1. Verify that the SPD you are about to install is rated for the application voltage and system. See Table 5 in Section 6, "Ordering Guidelines".
2. Follow all national, state and local electrical codes when connecting the SPD.
3. Before mounting the SPD, first determine the bus bar configuration. If the panelboard uses an offset B-Phase bus bar configuration, no action is required. If the panelboard uses a coplanar bus bar configuration, remove the bus bar extension bushing from the back of the SPD and discard. See Figure 2.
4. Mount the SPD to the support brackets (customer supplied) using #10 fasteners and tighten to 4.1 Nm (36 in-lbs). See Figures 4 and 5 for mounting details.
5. Install the bus mount fasteners and tighten to 4.1 Nm (36 in-lbs). See Figure 3.

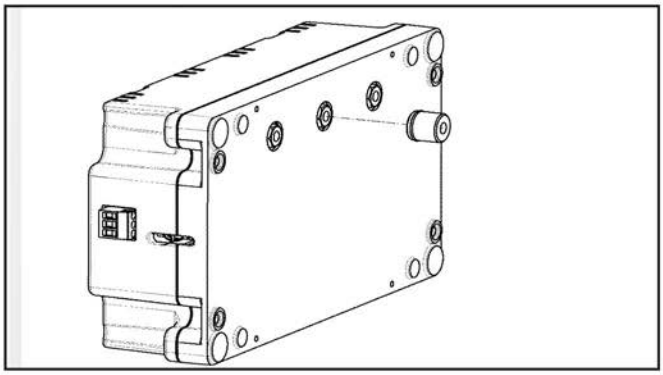

Figure 2. Bus Bar Extension Bushing

6. Select the correct wiring diagram for the SPD you are installing. You must refer to this diagram while wiring the SPD. See Figures 6, 7, 8, and 9, on page 4.

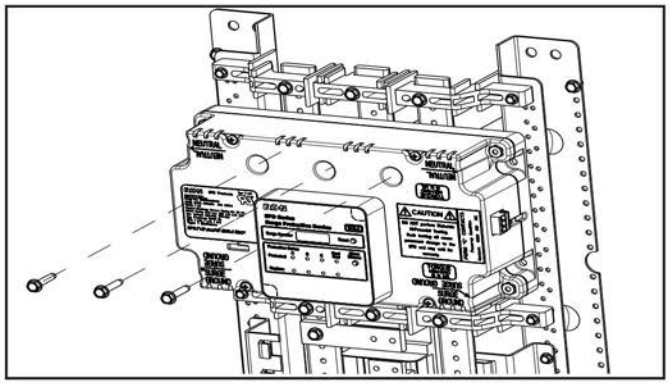

Figure 3. Bus Connection

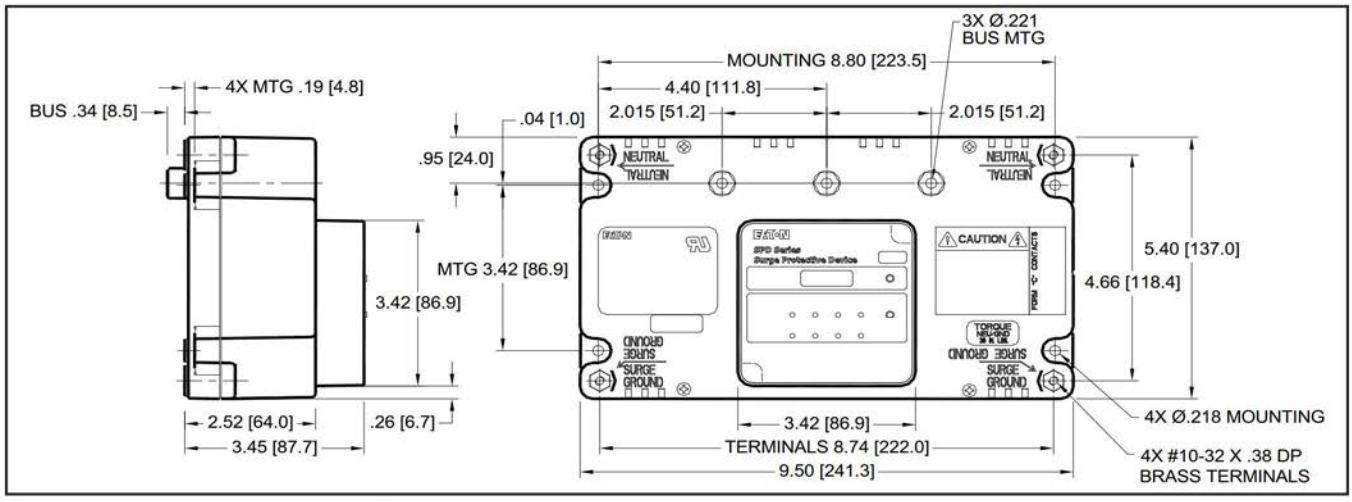

Figure 4. Dimensions for 50-200kA Units

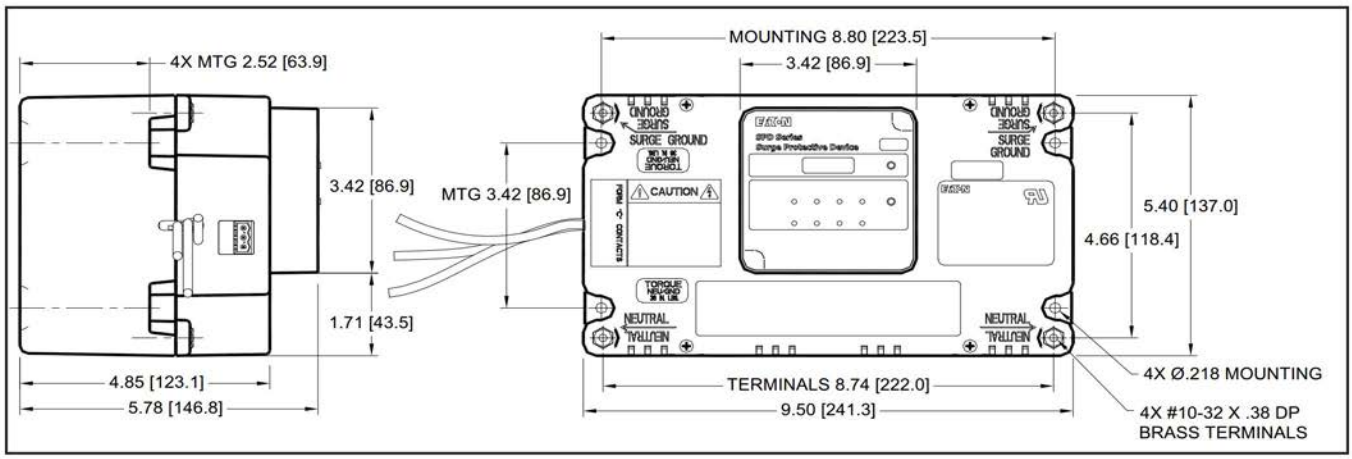

Figure 5. Dimensions for 250-400kA Units

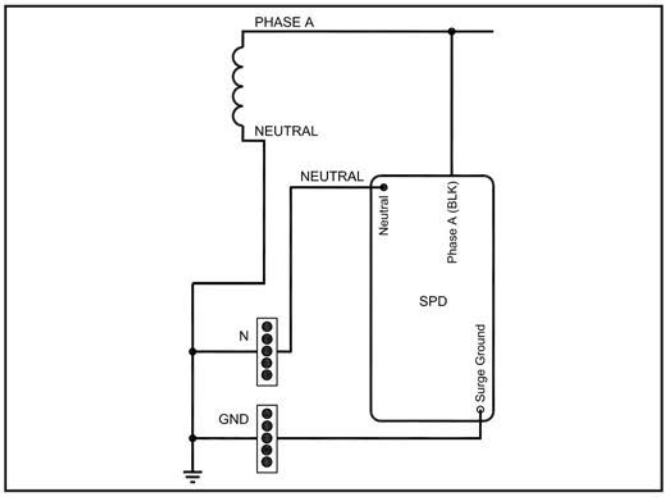

Figure 6. Wiring - Single Phase Units (230 L)

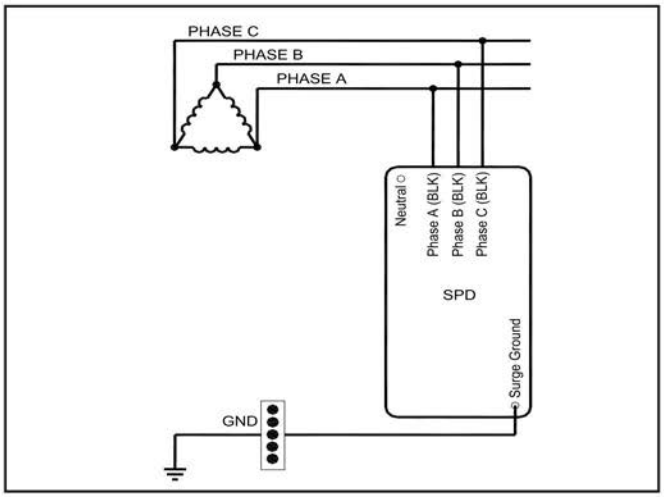

Figure 8. Wiring - 3-Phase Delta Units

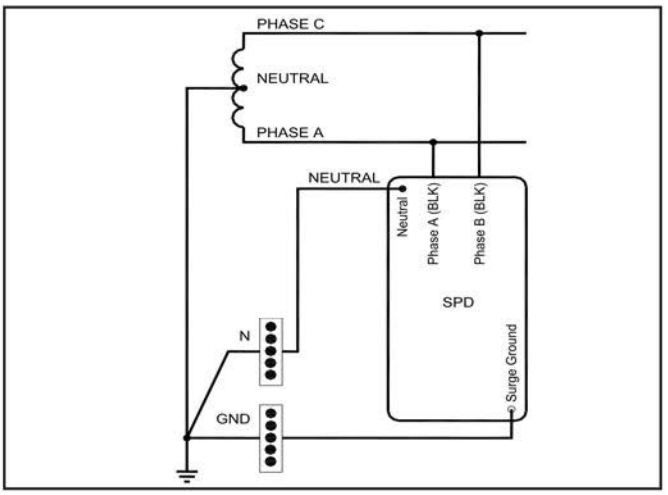

Figure 7. Wiring - Split Phase Units

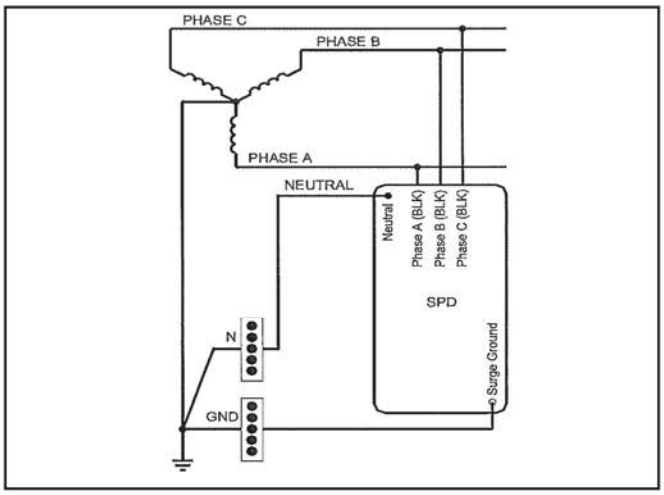

Figure 9. Wiring - 3-Phase Wye Units

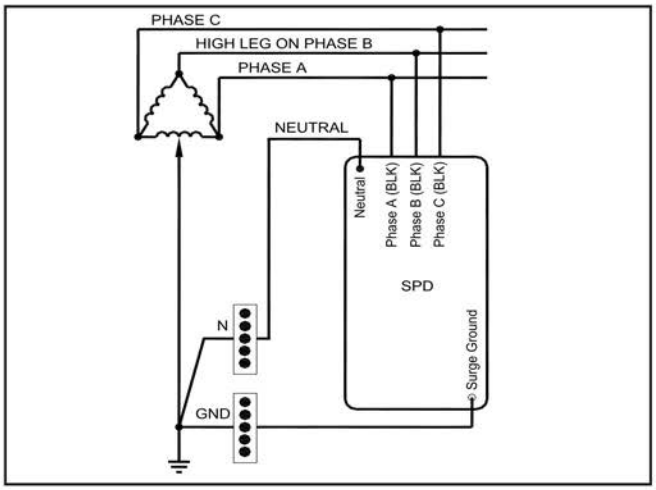

Figure 10. Wiring - High Leg Delta Units

Note: Please consult the factory for 240 delta high leg (4W+G) applications with high leg on the 'C' Phase.

7. Connect the System Ground wire (green) to the SPD's Surge Ground connection using a ring terminal suitable for use with a #10 fastener and a #10-32 x 3/8" fastener (customer supplied). Tighten the Surge Ground connection to 4.1 Nm (36 in-lbs). If the system uses an isolated ground, connect the isolated ground wire to Surge Ground. There are two Surge Ground connection points provided on the SPD. Connect **only one** of them. See Figure11.

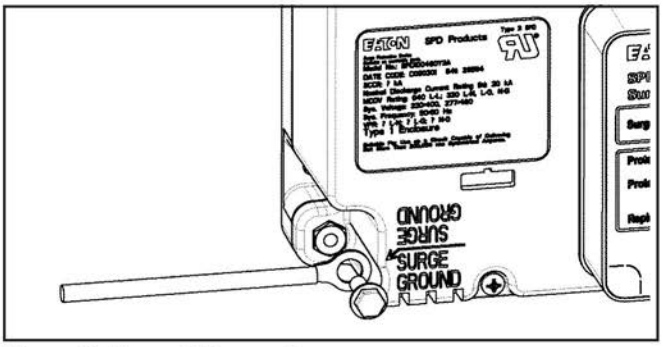

Figure 11. Ground Connection

8. If equipped, connect the System Neutral wire (grey or white) to the SPD. Connect the System Neutral wire to the SPD's Neutral connection using a ring terminal suitable for use with a #10 fastener and a #10-32 x 3/8" fastener (customer supplied). Tighten the Neutral connection to 4.1 Nm (36 in-lbs). There are two Neutral connection points provided on the SPD. Connect **only one** of them. See Figure 12.

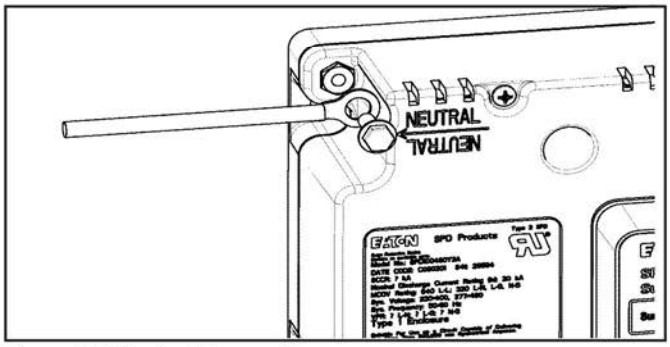

Figure 12. Neutral Connection

9. The SPD (Standard and Standard with Surge Counter models) also has an available connection for remote monitoring of the Form C relay contacts. See Figure13. This is a green connector located on the side of the SPD. To make the connection, remove the green connector and install the remote monitor leads (connector supports 12-24AWG wire). Fasten the remote monitoring wires to the N.O., N.C and COM connection points per the label on the front of the SPD. Contacts are rated: 150 Vac or 125 Vdc at 1A. Follow all national, state and local electrical codes. With wiring complete, plug the green connector into the SPD.

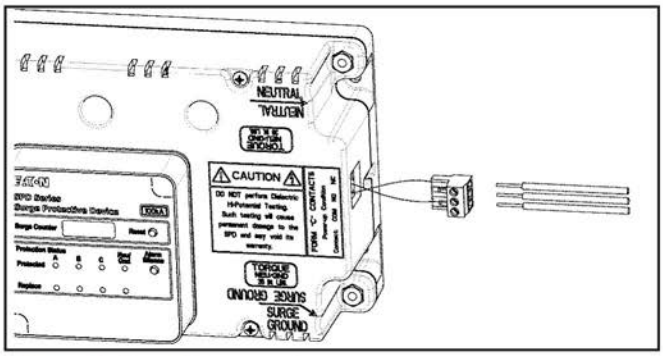

Figure 13. Form C Connection

10. Install the dead-front panel to complete the installation.

2.3.2 Connected Through a Circuit Breaker Applications

1. Verify that the SPD you are about to install is rated for the application voltage and system. See Table 5 in Section 6, "Ordering Gidelines".
2. Follow all national, state and local electrical codes when connecting the SPD.
3. Mount the SPD to the support brackets (customer supplied) using #10 x 2-3/4" fasteners and tighten to 4.1 Nm (36 in-lbs). For 50-200kA models, see Figure 4 for mounting dimensions. For 250-400kA models, see Figure 5 for mounting dimensions. **Note:** Mount the SPD as close as possible to the circuit breaker.
4. Determine the wire length required to connect to the breaker and cut Phase wires to the appropriate length. (To maximize SPD performance, wire length should be as short as possible). **Note:** For wire lengths longer than 4", Phase wires should be twisted once for each 4" of wire length to maximize SPD performance.
5. Connect Phase wire to circuit breaker. NEC requires that conductors to a surge device be protected by an overcurrent protection device. The cables on the SPD are #10 AWG, therefore would require a 30A 3-pole breaker. See Figure 14, and the wiring diagrams shown in Figures 6, 7, 8 and 9.

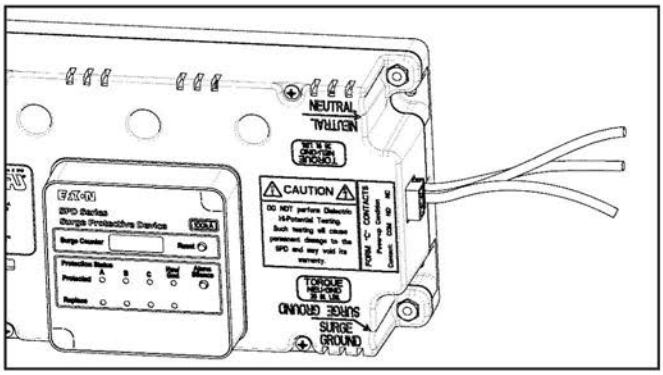

Figure 14. Phase Connections

6. Connect the System Ground wire (green) to the SPD's Surge Ground connection using a ring terminal suitable for use with a #10 fastener and #10-32 x 3/8" fastener (customer supplied). Tighten the Surge Ground connection to 4.1 Nm (36 in-lbs). If the system uses an isolated ground, connect the isolated ground wire to Surge Ground. There are two Surge Ground connection points provided on the SPD. Connect **only one** of them. See Figure 11.
7. If equipped, connect the System Neutral wire (grey or white) to the SPD. Connect the System Neutral wire to the SPD's Neutral connection using a ring terminal suit able for use with a #10 fastener and a #10-32 x 3/8" fastener (customer supplied). Tighten the Neutral connection to 4.1 Nm (36 in-lbs). There are two Neutral connection points provided on the SPD. Connect **only one** of them. See Figure 12.
8. The SPD (Standard and Standard with Surge Counter models) also has a connection available for remote monitoring of the Form C relay contacts. See Figure 14. This is a green connector located on the side of the SPD. To make the connection, remove the green connector and install the remote monitor leads (connector supports 12-24 AWG wire). Fasten the remote monitoring wires to the N.O., N.C. and COM connection points per the label on the front of the SPD. Contacts are rated: 150 Vac or 125 Vdc at 1A. Follow all national, state and local electrical codes. With wiring complete, plug the green connector into the SPD.
9. The final step of the SPD installation depends on the specific application. The various applications are listed below by catalog suffix.

   a. Suffix 'B': This is the Remote Display Panel (RDP) option. The RDP option requires the addition of a factory supplied RDP cable. See Section 3.3, "Remote Display Panel (RDP) Option" for Cable Catalog numbers.

      1. Install the RDP using cutout and mounting dimensions provided in Figure 15.

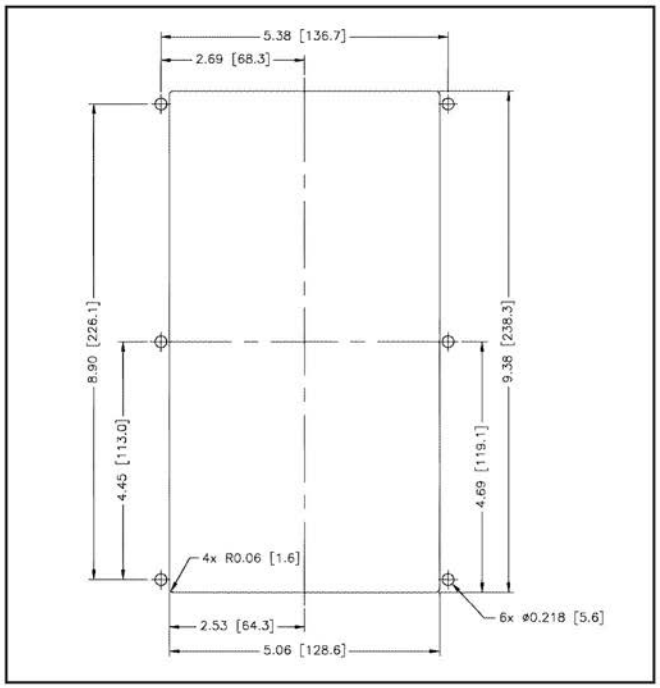

Figure 15. RDP Cutout and Mounting

      2. Connect the RDP cable to the SPD. Use tie wraps (already on the SPD) to secure the cable to the SPD. See Figure 16. Cable can be routed as a right or left dress.

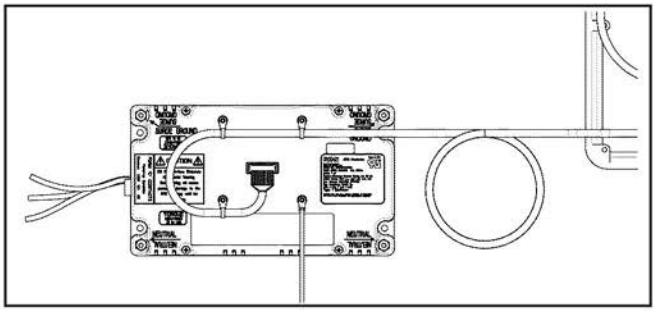

Figure 16. RDP to SPD Connection

      3. Connect the RDP cable to the display. Use tie wraps (already on the RDP) to secure the cable to the RDP. See Figure 17.

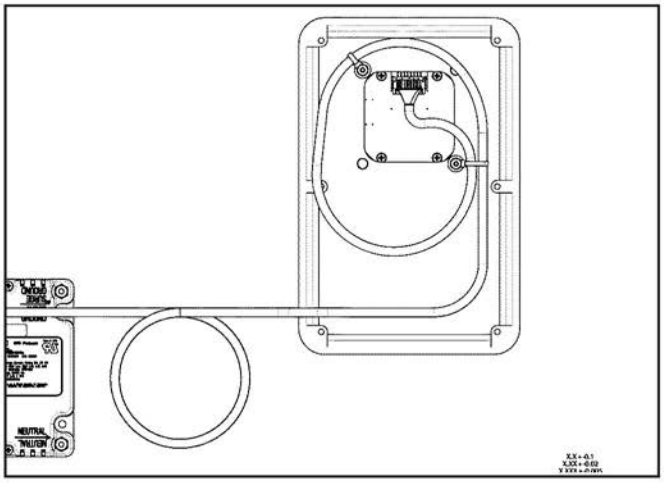

Figure 17. RDP Cable to Display Connection

   b. Suffix 'C': This unit is intended for use in Panelboard, Switchboard, and Busway applications.

      1. Ensure that the dead-front or door has the appropriate cut-out to accommodate the SPD Display. See Figure 4 or Figure 5.
      2. Install dead-front or door and secure.

   c. Suffix 'J': This unit is intended for MCC applications that require a NEMA 12 enclosure rating.

      1. Ensure that the MCC bucket door has the appropriate cut-out to accommodate the SPD Display. See Figure 4 or Figure 5.
      2. Place an appropriate NEMA 12 rated gasket around the Display opening on the inside of the door.
      3. Install the door and secure.

3.0 Operating Features

3.1 General

The Eaton SPD Series comes in three feature packages: Basic, Standard, and Standard with Surge Counter. The operating specifics of each feature package are described below.

The Eaton SPD Series requires no operator involvement, other than to monitor the display panel to determine status of the SPD.

After system power is applied, the SPD automatically begins protecting downstream electrical equipment from voltage transients.

Some SPD units have a Form C relay contact that allows for the remote indication of SPD status. Form C contact wires are connected via a three terminal connector. See Figure 13.

3.2 Displays and Indicators

All Eaton SPD Series units (Basic, Standard, and Standard With Surge Counter) use a display panel to indicate system status. The display panel is slightly different for each feature package.

Each display has both green and red light emitting diodes (LEDs) to indicate the status of the protection on each phase. Green indicates the phase is fully protected. Red indicates a loss of protection. Wye, Split Phase and High-Leg Delta units have an additional set of green/red LEDs to indicate status of Neutral/Ground protection.

When the LEDs turn red, an audible alarm will also sound on units equipped with an audible alarm.

Specific operating conditions displayed for each Eaton SPD Series Feature Package are described below.

3.2.1 Basic Feature Package

The Eaton SPD Basic Feature Package display is shown in Figure 18.

Figure 18. Basic Feature Package Display

The Basic Feature Package has the following features:

- Green LEDs: Illumination indicates the phase is fully protected, and operating normally, with all protection active and available. Green LEDs also indicate Neutral to Ground protection on units with a Neutral wire. Green LEDs do not indicate on/off status of power.
- Red LEDs: Illumination indicates a loss of protection, and that one or more protective devices are now inactive and unavailable for that Phase. Red LEDs also indicate Neutral to Ground protection on units with a Neutral wire. Red LEDs do not indicate on/off status of power.

3.2.2 Standard Feature Package

The Eaton SPD Series Standard Feature Package display is shown in Figure 19.

Figure 19. Standard Feature Package Display

The Standard Feature Package has the following features:

- All features of the Basic Feature Package.
- One Form C relay contact rated at 150Vac or 125Vdc @1A.
  - Normal operating conditions. N.O. = OPEN. N.C = CLOSED.
  - Loss of protection on any phase or loss of power. N.O. = CLOSED. N.C. = OPEN.
- Audible alarm with Reset push button.
- EMI/RFI filtering.

3.2.3 Standard With Surge Counter Feature Package

The Eaton SPD Series Standard With Surge Counter Feature Package display is shown in Figure 20.

Figure 20. Standard With Surge Counter Feature Package Display

The Standard With Surge Counter Feature Package has the following features:

- All features of the Standard Feature Package.
- LCD screen that displays surge count.
- Reset button to RESET the surge counter to zero.

3.2.4 SPD Display Rotation

The SPD display can be rotated on the SPD enclosure, up to 360 degrees. This allows you to position the display for the best visibility regardless of the position in which the SPD is installed.

Rotations are at 90, 180, and 270 degrees.

For a typical horizontal mounting see Figure 21. For a typical vertical mounting see Figure 22.

Reposition the SPD display as follows:

1. Remove power from the unit.
2. Remove and discard the perforated overlay material at the two opposite corners of the display.
3. Remove the two phillips head screws that hold the display.
4. Rotate the display to the desired position. Be careful not to overstress the display ribbon cable.
5. Place the display back onto the SPD enclosure. Again, be careful not to overstress or crimp the ribbon cable.
6. Replace the two phillips head screws. Tighten screws to 1.35 Nm (12 in-lbs).
7. Restore power to the unit.

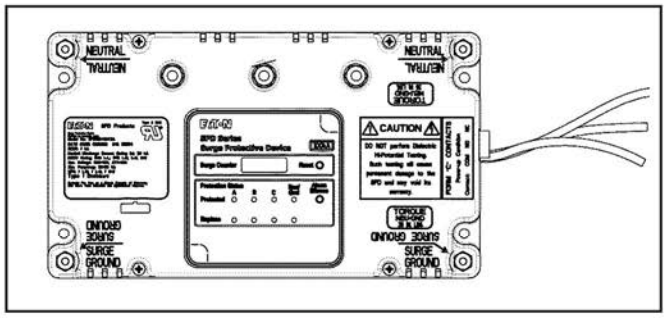

Figure 21. Typical Horizontal Display Mounting

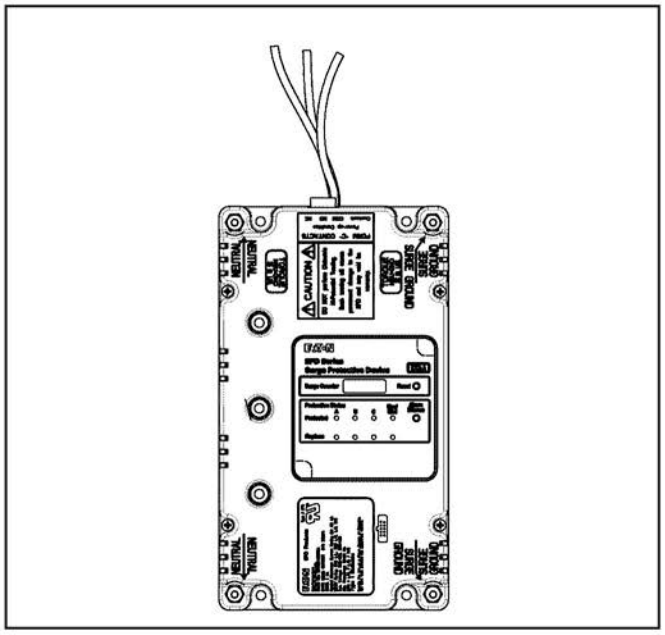

Figure 22. Typical Vertical Display Mounting

3.3 Remote Display Panel (RDP) Option

The Eaton Series SPD displays may be monitored on a remote display panel (RDP). This is indicated by the catalog style with a 'B' suffix (such as SPD250480D2B).

A separately purchased RDP cable is required to connect the SPD unit to the display.

Table 2 lists these cables and their part numbers.

Table 2. RDP Cable Options

Description	Catalog No.
4 ft. Cable for RDP	SPDRDCAB04
8 ft. Cable for RDP	SPDRDCAB08
12 ft. Cable for RDP	SPDRDCAB12

3.4 IEC Approved Models

Eaton's One-Port low-voltage Surge Protective Device Wye Models SPD120480Y2C, SPD160480Y2C, SPD200480Y2C and Delta Models SPD120480D2C, SPD160480D2C, SPD200480D2C meet the requirements of IEC 61643-11 / EN 61643-11, Part 11: Test Class II, and are intended to be installed in indoor applications with a degree of protection rated IP 00.

The SPD Delta and Wye Models are intended for use with a 3 Phase TN-S System with PE and Neutral Distribution, 5 conductor with a minimum 10 AWG or 6 mm^2. The Delta Models are also intended for use with a 3 Phase TN-C System with PEN Distribution, 4 conductor with a minimum 10 AWG or 6mm^2. Screws used for connection to ground shall be #10-32 x 3/8" and shall not be zinc or aluminum. This product is not serviceable and contains no replaceable parts.

Additional product information and ratings for IEC Applications:

- The SPD contains internal disconnects with a short circuit current rating I_{SCCR} of 200kA.
- Residual Current IPE for this product is 5 mA.
- Operating temperature is Normal -5°C to 40°C (23°F to 104°F.
- Humidity range is 5% through 95% non-condensing.
- The SPD may be mounted directly to earthed conductive surface, installed as per this manual.
- Temporary overvoltage rating UT = 402.6 V.
- Withstand or safe failure mode, for tT = 120 minutes, UT = 526 V.
- Modes of protection as marked on a Wye SPD = L-L, L-N, L-G(PE), N-G(PE).
- Modes of protection as marked on a Delta SPD = L-L, L-G(PE).

4.0 Troubleshooting

Many SPD failures result from improper installation. Once the SPD is installed properly, it is a highly reliable unit.

If the SPD does not function properly, first confirm that it is installed properly. See Section 2, "Installation."

If the SPD malfunctions after it has been operating routinely, refer to Table 3. This Troubleshooting Chart identifies possible causes and solutions to the malfunction. Further assistance may be obtained by calling Eaton's Applications Engineers, at 1-800-809-2772, option 4, sub-option 2, including being directed to the warranty process if applicable.

Table 3. Troubleshooting Chart

Condition	Probable Cause	Solution
Green LEDs ON (1 per phase) and one Green LED ON for Neu/Gnd Protection	Normal operation	N/A.
Audible Alarm OFF, Form C (N.C.) contact in the CLOSED state	Normal operation	N/A.
Phase Green LED is OFF, same Phase Red LED is ON, Audible Alarm is ON	Phase protection compromised or lost Extended Temporary Overvoltage (TOV) Significant surge event	Replace SPD Check electrical system for TOV sources, correct, replace SPD Replace SPD
Neu/Gnd Green LED is OFF, Neu/Gnd Red LED is ON, Audible Alarm is ON (for models with Neutral connections)	Neu/Gnd protection is compromised or lost Significant surge event	Replace SPD Replace SPD
All phase Green LEDs OFF, all phase RED LEDs ON, Audible Alarm is ON	All phase protection is compromised or lost SPD rated voltage is less than system voltage Extended Temporary Overvoltage (TOV) Significant surge event	Replace SPD Replace SPD with correct voltage model Check electrical system for TOV sources, correct, replace SPD Replace SPD
One of the display Red LEDs is ON. Audible Alarm is OFF	Audible Alarm Silence button has been depressed and Alarm is silenced	Normal operation If power is cycled and a fault condition still exists, the Audible Alarm will reactivate
All Green and Red LEDs are OFF, LCD display (on Surge Counter models) is OFF	SPD is not connected to a power source	Check system voltage at SPD connection Check SPD connections

5.0 Specifications

Table 4. Specifications

Description	Specification
Surge current capacity per phase	50, 80, 100, 120, 160, 200, 250, 300, 400 kA ratings available
Nominal discharge current (I_n)	20kA
Short circuit current rating (SCCR)	200kA
SPD Type	Basic feature package = Type 1 (can also be used in Type 2 applications) Standard and Standard with Surge Counter feature packages = Type 2
Standard split phase voltages available	120/240
Single phase	230
Three phase wye system voltages available	120/208, 127/220, 230/400, 277/480, 347/600
Three phase delta system voltages	240, 480, 600
Three phase high leg delta system voltages	120/240
Input Power Frequency	50/60 Hz
Power consumption (Basic units)	
208Y, 220Y, 230L, 240S, 240D, and 240H voltage codes	0.5W
400Y and 480Y and 480D voltage codes	1.1W
600Y and 600D voltage codes	1.3W
Power consumption (Standard and Standard with Surge Counter units)	
208Y, 220Y, 230L, 240S, 240D, and 240H voltage codes	0.6W
400Y, 480Y, and 480D Basic voltage codes	1.7W
600Y and 600D voltage codes	2.1W
Protection modes	Single split phase .....L-N, L-G, N-G, L-L Single phase .....L-N, L-G, N-G Three phase Wye..... L-N, L-G, N-G, L-L Three phase delta.....L-G, L-L Three phase high leg delta.....L-N, L-G, N-G, L-L
Maximum continuous operating voltage (MCOV)	
208Y, 220Y, 240S, 240D, and 240H voltage codes	150 L-N,150 L-G, 150 N-G, 300 L-L
230L, 400Y and 480Y voltage codes	320 L-N, 320 L-G, 320 N-G, 640 L-L
600Y voltage code	420 L-N, 420 L-G, 420 N-G, 840 L-L
240 D voltage code	320 L-G, 320 L-L
480 D voltage code	640L- L-G, 640 L-L
600D voltage code	840 L-G, 840 L-L
Ports	1
Operating temperature	-40 through 50° C (-40 through 122° F)
Operating humidity	5% through 95%, non-condensing
Operating altitude	Up to 16,000 ft (5000 m)
Seismic withstand capability	Meets or exceeds the requirements specified in the IBC® 2006, CBC 2007, and UBC® Zone 4
Weight	50-200kA - Approximately 1.6 kg (3.5 lbs) – 250 - 400kA - Approximately 3.2kg (7.0 lbs)
Form C relay contact ratings	150 Vac or 125 Vdc, 1A maximum
Form C relay contact loogic	Power on, normal state - NO contact = OPEN, NC contact = CLOSED Power off, fault state, - NO contact = CLOSED, NC contact = OPEN
EMI/RFI filtering attenuation (Standard and Standard With Surge Counter	Up to 50 dB from 10 kHz to 100 MHz
Agency certifications and approvals	UL1449 3rd Edition recognized component for the US and Canada, UL1283 (Type 2 SPDs only) IEC 61643-11/EN 61643-11, Part 11: Test Class II. See Section 6.0 Ordering Guidelines for specific models.
Warranty	10 Years, 15 Years if the product is properly registered with Eaton.

6.0 Ordering Guidelines

Table 5. Eaton SPD Series

SPD 250 480D 2 J

SPD

kA Rating

Options

50kA Per Phase
80kA Per Phase
100kA Per Phase
120kA Per Phase**
160kA Per Phase**
200kA Per Phase**
250kA Per Phase
300kA Per Phase
400kA Per Phase

Voltage Code

Options

Integrated Units

240S = 120/240 Split Phase
208Y = 120/208 Wye (4W + G)
220Y = 127/220 Wye (4W + G)
400Y = 230/400 Wye (4W + G)
480Y = 277/480 Wye (4W + G)**
600Y = 347/600 Wye (4W + G)
240D = 240 Delta (3W + G)
480D = 480 Delta (3W + G)**
600D = 600 Delta (3W + G)
240H = 240 Delta High Leg (4W + G) on 'B' Phase
230L = 230 Single Phase*
NOTE: Please consult the factory for 240 Delta HIgh Leg (4W+G) applications with high leg on 'C' Phase

* UL1449 3rd edition only

Feature Package

Options

1 = Basic.
Dual colored LED per Phase to indicate Protection status
Dual colored LED to indicate protection status of the N-G Mode on units with a Neutral Wire

2 = Standard.
Dual colored LED Per Phase to indicate Protection Status
Dual colored LED to indicate Protection Status of the N-G Mode on units with a Neutral Wire
Audible alarm with Silence button
Form 'C' Relay Contact. See Table 4 Specifications
EMI/RFI filtering Providing up to 50dB of Noise Attenuation from 10KHz to 100Mhz

3 = Standard With Surge Counter
Dual colored LED Per Phase to indicate Protection Status
Dual colored LED to indicate Protection Status of the N-G Mode on units with a Neutral Wire
Audible alarm with Silence button
Form 'C' Relay Contact
EMI/RFI filtering Providing up to 50dB of Noise Attenuation from 10kHz to 100Mhz
Surge Counter with Reset Button

Application Suffix

Options

Integrated Units

A = Panelboards, Direct Bus Mounted
B = Switchgear (Includes remote display panel & mounting hardware). Order cable separately
C = Panelboards, Switchboards, Busway
J = Motor Control Centers

NOTE: Units used in Panelboard applications are available in 50 – 200kA ratings only
NOTE: Use the 'C' option for Panelboard Applications when unit is connected through a Circuit Breaker

** Eaton's Wye Catalog Numbers SPD120480Y2C, SPD160480Y2C, and SPD200480Y2C and Eaton's Delta Catalog Numbers SPD120480D2C, SPD160480D2C, and SPD200480D2C meet the requirements of IEC 61643-11/EN 61643-11, Part 11: Test Class II, and intended to be installed in indoor applications with a degree of protection rated IP 00.

Example: SPD 250480D2J = SPD Series, 250kA Per Phase, 480D Voltage, Standard Feature Package, Motor Control Center Application.

7.0 Warranty

Eaton warrants these products for a period of 10 years from the date of delivery to the purchaser , 15 years if the product is properly registered with Eaton, to be free from defects in both workmanship and materials. Eaton assumes no risk or liability for results of the use of the products purchased from it, including but without limiting the generality of the foregoing: (1) The use in combination with any electrical or electronic components, circuits, systems, assemblies, or any other materials or substances; (2) Unsuitability of any product for use in any circuit or assembly.

Purchaser's rights under the warranty shall consist solely of requiring Eaton to repair, or at Eaton's sole discretion, replace, free of charge, F.O.B. factory, and defective items received at said factory within said term determined by Eaton to be defective. The giving of or failure to give any advice or recommendations by Eaton shall not constitute any warranty by or impose any liability upon Eaton. The foregoing constitutes the sole and exclusive liability of Eaton AND IS IN LIEU OF ANY AND ALL OTHER WARRANTIES EXPRESSED, IMPLIED OR STATUTORY AS TO THE MERCHANTABILITY, FITNESS FOR PURPOSE SOLD, DESCRIPTION, QUALITY, PRODUCTIVENESS OR ANY OTHER MATTER.

In no event shall Eaton be liable for special or consequential damages or for delay in performance of the warranty.

This warranty does not apply if the product has been misused, abused, altered, tampered with, or used in applications other than specified on the nameplate. At the end of the warranty period, Eaton shall be under no further warranty obligation expressed or implied.

The product covered by this warranty certificate can only be repaired or replaced by the factory. For help on troubleshooting the SPD, or for warranty information, call 1-800-809-2772, Option 4, sub-option 2. Repair or replacement units will be returned collect. If Eaton finds the return to be a manufacturer's defect, the product will be returned prepaid.

Copyright © 2013 by Eaton, Moon Township, PA, USA. All rights reserved. No part of this document may be reproduced in any way without the express written approval of Eaton.

Specifications contained herein are subject to change without notice.

EATON - CONFIDENTIAL AND PROPRIETARY NOTICE TO PERSONS RECEIVING THIS DOCUMENT AND/OR TECHNICAL INFORMATION IN THIS DOCUMENT, INCLUDING THE DRAWING AND INFORMATION CONTAINED THEREON, IS CONFIDENTIAL AND IS THE EXCLUSIVE PROPERTY OF EATON, AND IS MERELY ON LOAN AND SUBJECT TO RECALL BY EATON AT ANY TIME. BY TAKING POSSESSION OF THIS DOCUMENT, THE RECIPIENT ACKNOWLEDGES AND AGREES THAT THIS DOCUMENT CANNOT BE USED IN ANY MANNER ADVERSE TO THE INTERESTS OF EATON, AND THAT NO PORTION OF THIS DOCUMENT MAY BE COPIED OR OTHERWISE REPRODUCED WITHOUT THE PRIOR WRITTEN CONSENT OF EATON. IN THE CASE OF CONFLICTING CONTRACTUAL PROVISIONS, THIS NOTICE SHALL GOVERN THE STATUS OF THIS DOCUMENT.

DISCLAIMER OF WARRANTIES AND LIMITATION OF LIABILITY

The information, recommendations, descriptions and safety notations in this document are based on Eaton's ("Eaton") experience and judgment and may not cover all contingencies. If further information is required, an Eaton sales office should be consulted. Sale of the product shown in this literature is subject to the terms and conditions outlined in appropriate Eaton selling policies or other contractual agreement between Eaton and the purchaser. THERE ARE NO UNDERSTANDINGS, AGREEMENTS, WARRANTIES, EXPRESSED OR IMPLIED, INCLUDING WARRANTIES OF FITNESS FOR A PARTICULAR PURPOSE OR MERCHANTABILITY, OTHER THAN THOSE SPECIFICALLY SET OUT IN ANY EXISTING CONTRACT BETWEEN THE PARTIES. ANY SUCH CONTRACT STATES THE ENTIRE OBLIGATION OF EATON. THE CONTENTS OF THIS DOCUMENT SHALL NOT BECOME PART OF OR MODIFY ANY CONTRACT BETWEEN THE PARTIES.

In no event will Eaton be responsible to the purchaser or user in contract, in tort (including negligence), strict liability or otherwise for any special, indirect, incidental or consequential damage or loss whatsoever, including but not limited to damage or loss of use of equipment, plant or power system, cost of capital, loss of power, additional expenses in the use of existing power facilities, or claims against the purchaser or user by its customers resulting from the use of the information, recommendations and descriptions contained herein.

Eaton
Electrical Sector
1000 Eaton Boulevard
Cleveland OH 44122
United States
1-800-809-2772, option 4, sub-option 2
Eaton.com

© 2013 Eaton
All Rights Reserved
Printed in USA
Publication No. IM01005019E TBG000335
November 2013

Eaton is a registered trademark.

All other trademarks are property of their respective owners.

Powering Business Worldwide

Renewal Parts

EATON | Cutler-Hammer

Current Cutler-Hammer Panelboards

Renewal Parts

Supersedes RP.38F.01.T.E
pages 1 – 48 dated February 2000

Description	*Page*
Current Cutler-Hammer Panelboards	
PRL1a and PRL2a	5
Trim Locks	19
PRL3a	21
PRL4B/F	26
PRL5P	35
Branch Devices	37
PRL1a-LX and PRL2a-LX	41
Pow-R-Command™	42

Table of Contents *Page*

Procedure for Identifying Panelboard Type 3
Procedure for Identifying Renewal Parts 3
Distributor Ordering Instructions..... 3
Cutler-Hammer Satellite Plants .. 4

PRL1a, 2a Parts Section..... 5
Connector Kits, Vertical Breakers 5
Connector Kits, Main Lug 6
Connector Kits, Horizontally Mounted, PRL1a .. 9
Connector Kits, Horizontally Mounted, PRL2a .. 11
Neutral Assemblies 12
Ground Assemblies..... 16
Service Entrance Kits..... 16
Deadfront Covers..... 17
Trim Locks..... 19
Trim Clamps and Hardware Kits..... 20

PRL3a Parts Section..... 21
Connector Kits, Branch Breakers
QUICKLAG®..... 21
GB, GHB, GHBS..... 21
Twin Mounted F-Frame
150 Ampere Maximum 22
Single Mounted F-Frame
175 – 225 Ampere Maximum . 22
Ground Assemblies..... 23
Service Entrance Kits..... 23
Deadfront Covers..... 23

PRL4B/F Parts Section..... 26
Vented Cover Assemblies and Side Gutter Covers 26
Blank Covers..... 27
Breaker Connector Kits 28
Fusible FDPW Switch Connector Kit..... 29
Breaker Retrofit Kits..... 30
Fusible Retrofit Kits 30
Energy Sentinel 31
PRL1a, 2a, 3a and PRL4 Special Trims and Enclosures 32

PRL5P Parts Section 34
Ordering Procedure..... 34
Chassis Layout 35
Breaker Adapter Unit Catalog Numbers 36
Branch Breaker Information 37
Main or Through-Feed Lugs..... 38
Neutrals and Grounds..... 39
Boxes, Trims and Filler Plates.... 40

PRL1a, 2a-LX Column Panelboards..... 41
Pow-R-Command..... 42
Additional Services 42

Table 1. Product History Time Line

Product	1985	1990	1995	Present
Cutler-Hammer PRL1a, 2a			←	Oct. 1996 →
Cutler-Hammer PRL3a			←	Mar. 1994 →
Cutler-Hammer PRL4B/F	←			Oct. 1987 →
Cutler-Hammer PRL5P			←	Aug. 1995 →
Cutler-Hammer PRL1a, 2a-LX			←	Dec. 1997 →
Cutler-Hammer Pow-R-Command			←	Mar. 1996 →

Procedure for Identifying Panelboard Type

The current line of Pow-R-line C panelboards was introduced in 1993.

A panelboard is identified by data found on the nameplate. Pow-R-Line C panelboard nameplates are different in appearance, but all have the same critical information:

- Ampere rating of the main.
- Ampere rating of the neutral.
- Type of service (phase/wire).
- Manufacturing location.
- Type of panel.
- General order number.

In the event the nameplate is missing, it may still be possible to identify the panel type by location of the neutral bar. The illustrations to the right shows the position of the neutral in the panelboard.

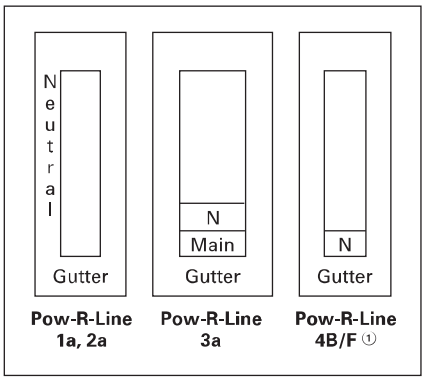

Figure 1. Position of the Neutral in the Panelboard

① PRL4F panels with vertical mounted main switch will have the neutral mounted at the opposite end the main.

Box width may also help identify the panelboard type. Standard width for PRL1a, PRL2a, and PRL3a is 20.00 inches (508.0 mm). PRL4 standard widths are 24.00, 36.00 and 44.00 inches (609.6, 914.4 and 1117.6 mm).

WARNING

HAZARDOUS VOLTAGE WILL CAUSE SEVERE INJURY OR DEATH. TURN OFF POWER SUPPLY TO EQUIPMENT BEFORE WORKING ON IT.

Procedure for Identifying Renewal Parts

1. Identify the type of panelboard, i.e. PRL1a, PRL2a, PRL3a, PRL4, PRL5P by reading the nameplate. Follow the procedure listed to the left.
2. Refer to the listing below and turn to the proper section in this brochure to identify standard parts.

Description	*Page*
PRL1a and PRL2a	5
PRL3a	21
PRL4B/F	26
PRL5P	35
PRL1a-LX (Column Width)	41
PRL2a-LX (Column Width)	41
Pow-R-Command	42
Trim Locks	19
Trim Clamps	20
Energy Sentinel	31
Special Trims and Enclosures	32

3. This book identifies those replacement parts most frequently ordered and which are readily available from stock. These parts can be ordered by style or catalog number to speed up processing and delivery.

Distributor Ordering Instructions

1. Specify part by style/part number.
2. Refer to PL01400001E for pricing information. Discount Symbol CE9 applies.
3. Turn to **Page 4** to locate nearest Satellite Plant.
4. Enter the order on the satellite plant via mail, fax or phone.
5. Selling policy 25-000 applies.

Cutler-Hammer Satellite Plants

Figure 2. Satellite Plants

Atlanta
7990-A 2nd Flag Drive
Austell, GA 30001
Phone 770-944-1022
FAX 770-944-2033

Baltimore
6671 Santa Barbara Court, Suite A
Elkridge, MD 21227
Phone 410-796-7777
FAX 410-796-7755

Chicago
959 AEC Drive
Wood Dale, IL 60191
Phone 630-860-3500
FAX 630-860-3569

Cleveland
4711 Hinkley Industrial Parkway
Cleveland, OH 44109
Phone 216-485-1940
FAX 216-485-1943

Dallas
1100 Avenue T
Grand Praire, TX 75050
Phone 972-988-3339
FAX 972-641-6435

Denver
14101 East 33rd Place, Suite F
Aurora, CO 80011
Phone: 303-371-7844
FAX 303-371-4175

Hartford
625 Day Hill Road
Windsor, CT 06095
Phone 860-688-7330
FAX 860-688-4982

Houston
10810 West Little York, Suite 100
Houston, TX 77041
Phone 713-688-8430
FAX 713-688-3764

Los Angeles
2021 Locust Court
Ontario, CA 91761
Phone 909-923-2040
FAX 909-923-2344

New Jersey
96 Stemmers Lane
Westampton, NJ 08060
Phone 609-835-4230
FAX 609-835-4777

Orlando
3827 St. Valentine Way
Orlando, FL 32811
Phone 407-843-3863
FAX 407-841-9135

Phoenix
7160 South Harl Avenue
Tempe, AZ 85283
Phone 480-777-3957
FAX 480-777-3958

Raleigh
2933 S. Miami Blvd., Suite 111
Durham, NC 27703
Phone 919-544-7074
FAX 919-572-9751

San Francisco
20919 Cabot Boulevard
Hayward, CA 94545
Phone 510-784-8981
FAX 510-784-8980

Seattle
18657 72nd Avenue South
Kent, WA 98032
Phone 425-251-9081
FAX 425-251-0079

St. Louis
12947 Gravois Road
St. Louis, MO 63127
Phone: 314-842-7797
FAX 314-842-2552

PRL1a, 2a Parts Section	Page
Connector Kits, Vertical Breakers	5
Connector Kits, Main Lug	6 – 8
Connector Kits, Horizontally Mounted, PRL1a	9 – 10
Connector Kits, Horizontally Mounted, PRL2a	11
Neutral Assemblies	12 – 15
Ground Assemblies	16
Service Entrance Kits	16
Deadfront Covers	17, 18
Trim Locks	19
Trim Clamps and Hardware Kits	20

PRL1a, 2a Connector Kits

Table 2. Vertical Breaker Assemblies

Device Type ①	Device Mounting	3-Phase		1-Phase	
		Tin-Plated Aluminum Connector	Silver-Plated Copper Connector	Tin-Plated Aluminum Connector	Silver-Plated Copper Connector
		Catalog Number			
F-Frame ② (100 Ampere Maximum)	Top Fed Bottom Fed	KB13AFT KB13AFB	KB13SFT KB13SFB	KB11AFT KB11AFB	KB11SFT KB11SFB
F-Frame ③ (225 Ampere Maximum)	Top Fed Bottom Fed	KB23AFT KB23AFB	KB23SFT KB23SFB	KB21AFT KB21AFB	KB21SFT KB21SFB
J-Frame	Top Fed Bottom Fed	KB43AJT KB43AJB	KB43SJT KB43SJB	KB41AJT KB41AJB	KB41SJT KB41SJB
K-Frame	Top Fed Bottom Fed	KB43AKT KB43AKB	KB43SKT KB43SKB	KB41AKT KB41AKB	KB41SKT KB41SKB

① Order main or sub-feed breaker separately when ordering above connector kits.
② EHD, FD, HFD, FDC.
③ FD, HFD, FDC, ED, EDH, EDC.

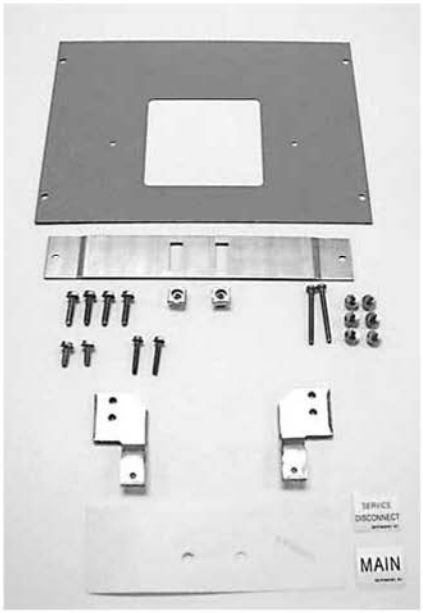

KB11AFT

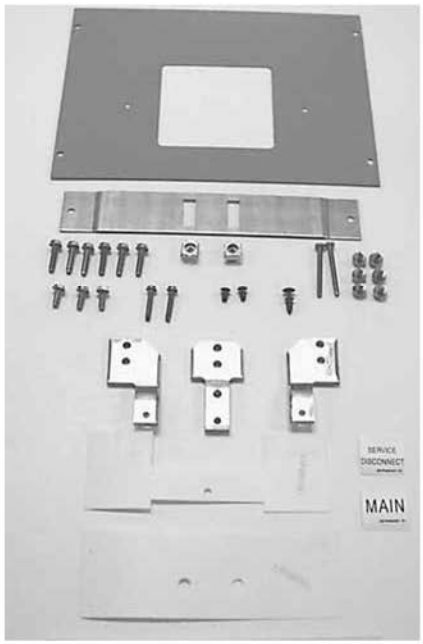

KB13AFT

PRL1a, 2a Connector Kits

Table 3. 100 Ampere Lug Assemblies

Lug Type	Panel Lug Options ①	Wire Size Range	Quantity Per Phase	3-Phase		1-Phase	
				Tin-Plated Aluminum Connector	Silver-Plated Copper Connector	Tin-Plated Aluminum Connector	Silver-Plated Copper Connector
				Catalog Number			
Aluminum/Copper Mechanical	STD	#14 – 1/0	1	KL13AMS	KL13SMS	KL11AMS	KL11SMS
	SFL	#14 – 1/0	2	KL13AMF	KL13SMF	KL11AMF	KL11SMF
	OVS	#6 – 300 kcmil	1	KL13AMO	KL13SMO	KL11AMO	KL11SMO
Crimp	STD	#8 – 1/0	1	KL13AVS	KL13SVS	KL11AVS	KL11SVS
	SFL	#8 – 1/0	2	KL13AVF	KL13SVF	KL11AVF	KL11SVF
	OVS	#4 – 300 kcmil	1	KL13AVO	KL13SVO	KL11AVO	KL11SVO
Copper Mechanical	STD	#14 – 1/0	1	—	KL13SCS	—	KL11SCS
	SFL	#14 – 1/0	2	—	KL13SCF	—	KL11SCF
	OVS	#6 – 250 kcmil	1	—	KL13SCO	—	KL11SCO

① STD = Standard lugs. Use for main or through-feed.
SFL = Sub-feed lugs.
OVS = Oversize lugs. Use for main or through-feed.

KL13AMS

KL11AVS

PRL1a, 2a Connector Kits

Table 4. 225 Ampere Lug Assemblies

Lug Type	Panel Lug Options ①	Wire Size Range	Quantity Per Phase	3-Phase		1-Phase	
				Tin-Plated Aluminum Connector	Silver-Plated Copper Connector	Tin-Plated Aluminum Connector	Silver-Plated Copper Connector
				Catalog Number			
Aluminum/Copper Mechanical	STD	#6 – 300 kcmil	1	KL23AMS	KL23SMS	KL21AMS	KL21SMS
	SFL	#6 – 300 kcmil	2	KL23AMF	KL23SMF	KL21AMF	KL21SMF
	OVS	4/0 – 500 kcmil	1	KL23AMO	KL23SMO	KL21AMO	KL21SMO
Crimp	STD	#4 – 300 kcmil	1	KL23AVS	KL23SVS	KL21AVS	KL21SVS
	SFL	#4 – 300 kcmil	2	KL23AVF	KL23SVF	KL21AVF	KL21SVF
	OVS	2/0 – 500 kcmil	1	KL23AVO	KL23SVO	KL21AVO	KL21SVO
Copper Mechanical	STD	#6 – 250 kcmil	1	—	KL23SCS	—	KL21SCS
	SFL	#6 – 250 kcmil	2	—	KL23SCF	—	KL21SCF
	OVS	1/0 – 600 kcmil	1	—	KL23SCO	—	KL21SCO

① STD = Standard lugs. Use for main or through-feed.
SFL = Sub-feed lugs.
OVS = Oversize lugs. Use for main or through-feed.

KL23AMS

KL21AVS

PRL1a, 2a Connector Kits

Table 5. 400 Ampere Lug Assemblies

Lug Type	Panel Lug Options ①	Wire Size Range	Quantity Per Phase	3-Phase		1-Phase	
				Tin-Plated Aluminum Connector	Silver-Plated Copper Connector	Tin-Plated Aluminum Connector	Silver-Plated Copper Connector
				Catalog Number			
Aluminum/Copper Mechanical	STD SFL OVS	4/0 – 500 kcmil N/A 3/0 – 750 kcmil	2 N/A 2	**KL43AMS** — **KL43AMO**	**KL43SMS** — **KL43SMO**	**KL41AMS** — **KL41AMO**	**KL41SMS** — **KL41SMO**
Crimp	STD SFL OVS	2/0 – 500 kcmil N/A 500 – 750 kcmil	2 N/A 2	**KL43AVS** — **KL43AVO**	**KL43SVS** — **KL43SVO**	**KL41AVS** — **KL41AVO**	**KL41SVS** — **KL41SVO**
Copper Mechanical	STD SFL OVS	1/0 – 600 kcmil N/A 1/0 – 600 kcmil	1 N/A 1	— — —	— — **KL43SCO**	— — —	— — **KL41SCO**

① STD = Standard lugs. Use for main or through-feed.
SFL = Sub-feed lugs.
OVS = Oversize lugs. Use for main or through-feed.

KL43AMS

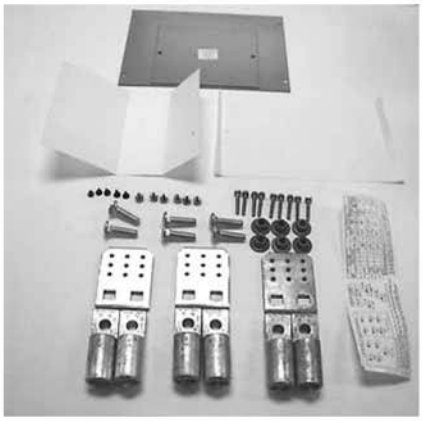

KL43AVS

PRL1a Horizontally Mounted Connector Kit Assemblies

Table 6. Bolt-on QUICKLAG Breaker Assemblies

Breaker Frame	Drawing Number ①	Branch Circuit Quantity	3-Phase		1-Phase	
			Tin-Plated Aluminum Connector	Silver-Plated Copper Connector	Tin-Plated Aluminum Connector	Silver-Plated Copper Connector
			Item Number			
BA, BAB, QBH, QBGF, QBHGF, QBGFEP, QBHGFEP	1C96608	12 18 30	G01 G09 G17	G03 G11 G19	G05 G13 G21	G07 G15 G23
		42 48 54	G25 G33 G41	G27 G35 G43	G29 G37 G45	G31 G39 G47
		72 96	G49 G57	G51 G59	G53 G61	G55 G63

① Order the basic drawing number, along with the equivalent G–number that's needed.

Note: When determining branch circuit quantity, remember:
1. QUICKLAG breakers with shunt trips require one additional circuit.
2. UL® listed lighting and appliance (CTL) panelboards **cannot** exceed 42 electrically connected circuits in a single enclosure.
3. When bare copper is specified, use the silver-plated groups.
4. **Order breakers separately with connector kit.**

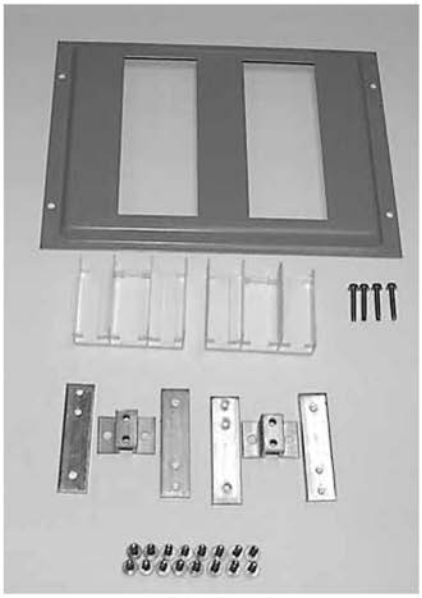

1C96608G01

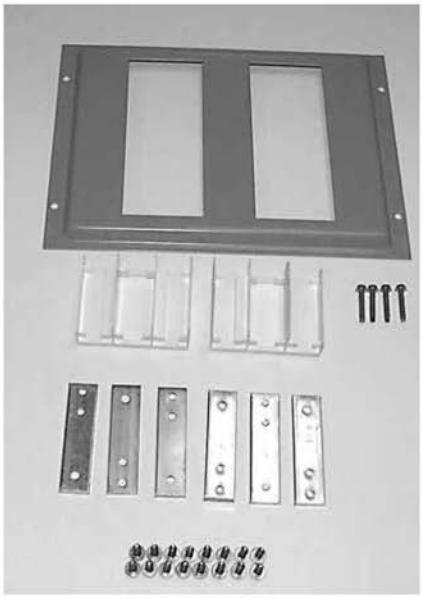

1C96608G05

PRL1a Horizontally Mounted Connector Kit Assemblies

Table 7. Plug-in QUICKLAG Breaker Assemblies

Breaker Frame	Drawing Number ①	Branch Circuit Quantity	3-Phase		1-Phase	
			Tin-Plated Aluminum Connector	Silver-Plated Copper Connector	Tin-Plated Aluminum Connector	Silver-Plated Copper Connector
			Item Number			
HQP, QPHW, QHPX, QPGF, QPHGF, QPGFEP, QPHGFEP	2C11642	12	—	G03	—	G07
		18	—	G11	—	G15
		30	—	G19	—	G23
		42	—	G27	—	G31
		48	—	G35	—	G39
		54	—	G43	—	G47
		72	—	G51	—	G55
		96	—	G59	—	G63

① Order the basic drawing number, along with the equivalent G–number that's needed.

Note: When determining branch circuit quantity, remember:
1. QUICKLAG breakers with shunt trips require one additional circuit.
2. UL listed lighting and appliance (CTL) panelboards **cannot** exceed 42 electrically connected circuits in a single enclosure.
3. When aluminum is specified, use the silver-plated groups.
4. The sum of the horizontally twin mounted breakers **shall not exceed 140 amperes.**
5. **Order breakers separately with connector kit.**

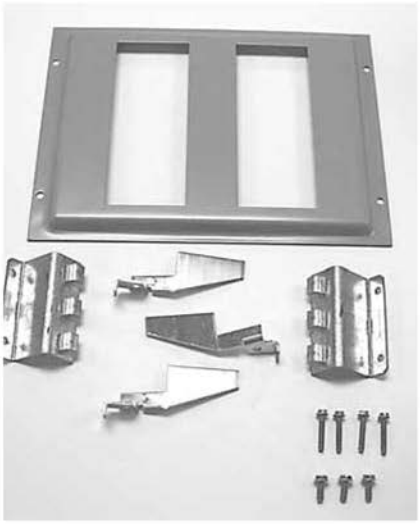

2C11642G03

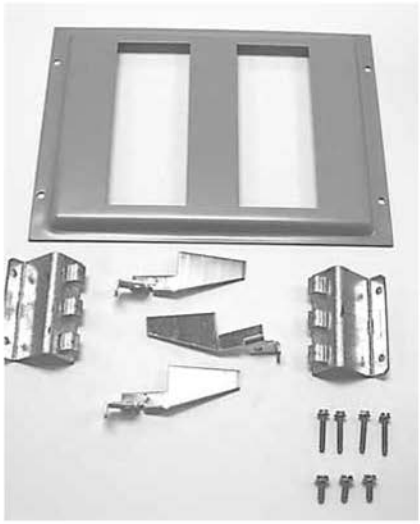

2C11642G07

PRL2a Horizontally Mounted Connector Kit Assemblies

Table 8. GB, GHB, GHQ, GHBS Breaker Assemblies

Breaker Frame	Drawing Number ①	Branch Circuit Quantity	3-Phase		1-Phase	
			Tin-Plated Aluminum Connector	Silver-Plated Copper Connector	Tin-Plated Aluminum Connector	Silver-Plated Copper Connector
			Item Number			
GB, GHB, GHQ GHBS	1C96609	12 18 30	G01 G09 G17	G03 G11 G19	G05 G13 G21	G07 G15 G23
		42 48 54	G25 G33 G41	G27 G35 G43	G29 G37 G45	G31 G39 G47
		72 96	G49 G57	G51 G59	G53 G61	G55 G63

① Order the basic drawing number, along with the equivalent G–number that's needed.

Note: When determining branch circuit quantity, remember:
1. QUICKLAG breakers with shunt trips require one additional circuit.
2. UL listed lighting and appliance (CTL) panelboards **cannot** exceed 42 electrically connected circuits in a single enclosure.
3. When bare copper is specified, use the silver-plated groups.
4. **Order breakers separately with connector kit.**

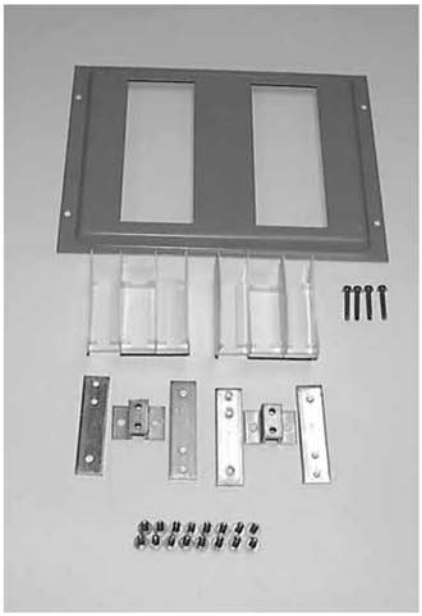

1C96609G01

PRL1a, 2a Neutral Assemblies

Table 9. 100 Ampere Neutral Assemblies ①

Panel Main Bus Ampere Rating	Neutral Rating	Lug Type	Drawing Number ②	Panel Lug Options ③	Wire Size Range	Quantity	Tin-Plated Aluminum Connector	Silver-Plated Copper Connector
							Item Number	
100	100%	Mechanical	1C96646	STD SFL/TFL OVS	#14 – 1/0 #14 – 1/0 #6 – 300 kcmil	1 2 1	G02 G05 G09	G03 G07 G11
		Crimp	1C96647	STD SFL/TFL OVS	#8 – 1/0 #8 – 1/0 #4 – 300 kcmil	1 2 1	G01 G05 G09	G03 G07 G11
		Copper	1C96648	STD SFL/TFL OVS	#14 – 1/0 #14 – 1/0 #6 – 250 kcmil	1 2 1	— — —	G03 G07 G11
	200%	Mechanical	1C96649	STD SFL/TFL OVS	#6 – 300 kcmil #6 – 300 kcmil 4/0 – 500 kcmil	1 2 1	G02 G06 G09	G03 G07 G11
		Crimp	1C96650	STD SFL/TFL OVS	#4 – 300 kcmil #4 – 300 kcmil 2/0 – 500 kcmil	1 2 1	G01 G05 G09	G03 G07 G11
		Copper	1C96651	STD SFL/TFL OVS	#6 – 250 kcmil #6 – 250 kcmil 1/0 – 600 kcmil	1 2 1	— — —	G03 G07 G11

① The assemblies shown on this page are for panelboards that mount in 30.00 – 90.00-inch (762.0 – 2286.0 mm) high enclosures only. Reference **Page 15** for assemblies for panelboards that mount in 21.00 – 27.00-inch (533.4 – 685.8 mm) high enclosures.
② Order the basic drawing number, along with the equivalent G–number that's needed.
③ STD = Standard lugs.
SFL/TFL = Sub-feed and through-feed lugs.
OVS = Oversize lugs.

1C96646G01

PRL1a, 2a Neutral Assemblies

Table 10. 225 Ampere Neutral Assemblies ①

Panel Main Bus Ampere Rating	Neutral Rating	Lug Type	Drawing Number ②	Panel Lug Options ③	Wire Size Range	Quantity	Tin-Plated Aluminum Connector	Silver-Plated Copper Connector
							Item Number	
225	100%	Mechanical	1C96649	STD SFL/TFL OVS	#6 – 300 kcmil #6 – 300 kcmil 4/0 – 500 kcmil	1 2 1	G02 G06 G09	G03 G07 G11
		Crimp	1C96650	STD SFL/TFL OVS	#4 – 300 kcmil #4 – 300 kcmil 2/0 – 500 kcmil	1 2 1	G01 G05 G09	G03 G07 G11
		Copper	1C96651	STD SFL/TFL OVS	#6 – 250 kcmil #6 – 250 kcmil 1/0 – 600 kcmil	1 2 1	— — —	G03 G07 G11
	200%	Mechanical	1C96652	STD SFL/TFL OVS	4/0 – 500 kcmil N/A 3/0 – 750 kcmil	2 N/A 2	G01 G05 G09	G03 G07 G11
		Crimp	1C96653	STD SFL/TFL OVS	2/0 – 500 kcmil N/A 500 – 750 kcmil	2 N/A 2	G01 G05 G09	G03 G07 G11
		Copper	1C96654	STD SFL/TFL OVS	1/0 – 600 kcmil N/A 1/0 – 600 kcmil	1 N/A 1	— — —	G03 G07 G11

① The assemblies shown on this page are for panelboards that mount in 30.00 – 90.00-inch (762.0 – 2286.0 mm) high enclosures.
② Order the basic drawing number, along with the equivalent G–number that's needed.
③ STD = Standard lugs.
SFL/TFL = Sub-feed and through-feed lugs.
OVS = Oversize lugs.

1C96649G01

PRL1a, 2a Neutral Assemblies

Table 11. 400 Ampere Neutral Assemblies ①

Panel Main Bus Ampere Rating	Neutral Rating	Lug Type	Drawing Number ②	Panel Lug Options ③	Wire Size Range	Quantity	Tin-Plated Aluminum Connector	Silver-Plated Copper Connector
							Item Number	
400	100%	Mechanical	1C96652	STD SFL/TFL OVS	4/0 – 500 kcmil N/A 3/0 – 750 kcmil	2 N/A 2	G01 G05 G09	G03 G07 G11
		Crimp	1C96653	STD SFL/TFL OVS	2/0 – 500 kcmil N/A 500 – 750 kcmil	2 N/A 2	G01 G05 G09	G03 G07 G11
		Copper	1C96654	STD SFL/TFL OVS	1/0 – 600 kcmil N/A 1/0 – 600 kcmil	1 N/A 1	— — —	G03 G07 G11

① The assemblies shown on this page are for panelboards that mount in 30.00 – 90.00-inch (762.0 – 2286.0 mm) high enclosures.
② Order the basic drawing number, along with the equivalent G–number that's needed.
③ STD = Standard lugs.
SFL/TFL = Sub-feed and through-feed lugs.
OVS = Oversize lugs.

1C96652G01

PRL1a, 2a Neutral Assemblies

Table 12. 100 Ampere Neutral Assemblies for 21.00 – 27.00-Inch (533.4 – 685.8 mm) High Enclosures Only ①

Panel Main Bus Ampere Rating	Neutral Rating	Lug Type	Drawing Number ②	Panel Lug Options ③	Wire Size Range	Quantity	Tin-Plated Aluminum Connector	Silver-Plated Copper Connector
							Item Number	
100	100%	Mechanical	1C96645	STD SFL/TFL OVS	#14 – 1/0 #14 – 1/0 N/A	1 2 N/A	G01 G05 —	G03 G07 —
		Crimp	N/A	STD SFL/TFL OVS	N/A N/A N/A	N/A N/A N/A	— — —	— — —
		Copper	N/A	STD SFL/TFL OVS	N/A N/A N/A	N/A N/A N/A	— — —	— — —
	200%	Mechanical	1C97022	STD SFL/TFL OVS	#6 – 300 kcmil #6 – 300 kcmil N/A	1 2 N/A	G01 G05 —	G03 G07 —
		Crimp	N/A	STD SFL/TFL OVS	N/A N/A N/A	N/A N/A N/A	— — —	— — —
		Copper	N/A	STD SFL/TFL OVS	N/A N/A N/A	N/A N/A N/A	— — —	— — —

① The assemblies shown on this page are for panelboards that mount in 21.00 – 27.00-inch (533.4 – 685.8 mm) high enclosures only. Reference **Page 12** for assemblies for panels that mount in 36.00, 48.00, 60.00, 72.00 and 90.00-inch (914.4, 1219.2, 1524.0, 1828.8 and 2286.0 mm) high enclosures.
② Order the basic drawing number, along with the equivalent G–number that's needed.
③ STD = Standard lugs.
SFL/TFL = Sub-feed and through-feed lugs.
OVS = Oversize lugs.

1C96645G01

PRL1a, 2a Ground Assemblies

Table 13. Standard Ground

Drawing Number ①	Enclosure Height in Inches (mm)	Bar Material	Item Number
5158C05	24.00 (609.6)	Aluminum/Copper	G01
		Copper	G03
	36.00 (914.4), 48.00 (1219.2), 60.00 (1524.0), 72.00 (1828.8), 90.00 (2286.0)	Aluminum/Copper	G02
		Copper	G04

① Order the basic drawing number, along with the equivalent G–number that's needed (example 5158C05G01).

5158C05G01

5158C05G02

Table 14. Isolated Ground

Drawing Number ②	Enclosure Height in Inches (mm)	Bar Material	Item Number
2C11296	24.00 (609.6)	Aluminum/Copper	G01
		Copper	G02
	36.00 (914.4), 48.00 (1219.2), 60.00 (1524.0), 72.00 (1828.8), 90.00 (2286.0)	Aluminum/Copper	G03
		Copper	G04

② Order the basic drawing number, along with the equivalent G–number that's needed (example 5158C05G01).

PRL1a, 2a Service Entrance Kits

Table 15. PRL1a, 2a Service Entrance Kits

Drawing Number ③	Panel Ampere Rating	Tin-Plated Aluminum	Bare Copper	Silver-Plated Copper	Tin-Plated Copper
		Item Number			
Mechanical Main Lugs or Main Breakers					
4180B62	100 – 225	G01	G02	G03	G04
4180B62	400	G05	G06	G07	G08
Compression (Crimp) Main Lugs					
4180B62	100 – 225	G09	G10	G11	G12
4180B62	400	G13	G14	G15	G16
Copper Main Lugs					
4180B62	100 – 225	—	G18	G19	G20
4180B62	400	—	G22	G23	G24

③ Order the basic drawing number, along with the equivalent G–number that's needed (example 5158C05G01).

4180B62G01

PRL1a, 2a Deadfront Covers

1C96638G01

Note: Does not apply to PRL4 sub-chassis.

Table 16. Assembly

Drawing Number ①	Standard Enclosure Height in Inches (mm)						
	24.00 (609.6)	36.00 (914.4)	42.00 (1066.8)	48.00 (1219.2)	60.00 (1524.0)	72.00 (1828.8)	90.00 (2286.0)
1C96638	G01	G02	G07	G03	G04	G05	G06

① Order the basic drawing number, along with the equivalent G–number that's needed (example 1C96638G01).

Table 17. Vertically Mounted Devices

Mounting Arrangement	Device/Frame	Drawing Number ②	Mounting Position	Item Number
Vertical	100 Ampere MLO, SFL, TFL or F-Frame (100 Ampere Maximum)	4180B03	Top Bottom	H01 H01
	225 Ampere MLO, SFL, TFL or F-Frame (225 Ampere Maximum)	4180B61	Top Bottom	H01 H01
	400 Ampere MLO, SFL, TFL or J-Frame	4180B04	Top Bottom	H01 H02
	400 Ampere MLO, TFL or K-Frame	4180B05	Top Bottom	H01 H02
Blank Covers in Inches (mm)	1.00 (25.4) 2.00 (50.8) 3.00 (76.2)	4180B08	N/A N/A N/A	H01 H02 H03
	4.00 (101.6) 5.00 (127.0) 6.00 (152.4)		N/A N/A N/A	H04 H05 H06
	7.00 (177.8) 8.00 (203.2) 9.00 (228.6)		N/A N/A N/A	H07 H08 H09
	10.00 (254.0) 11.00 (279.4) 12.00 (304.8)		N/A N/A N/A	H10 H11 H12
	13.00 (330.2) 14.00 (355.6) 15.00 (381.0) 16.00 (406.4)		N/A N/A N/A N/A	H13 H14 H15 H16

② Order the basic drawing number, along with the equivalent H–number that's needed (example 4180B03H01).

4180B08H03

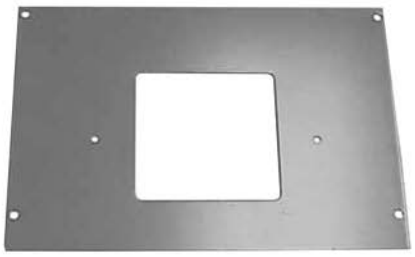

4180B03H01

PRL1a, 2a Deadfront Covers

Note: Does not apply to PRL4 sub-chassis.

Table 18. Horizontally Mounted Devices

Mounting Arrangement	Device/ Frame	Drawing Number ①	Branch Circuit Quantity	Item Number	Quantity Required
Horizontal	BA, BAB, QBH, QBGF, QBHGF, QBGFEP, QBHGFEP	1C96619	12 18 30	H01 H02 H04	1 1 1
			42 48 54	H06 H03 H03 and H04	1 2 1 Each
			72 96	H05 H07	2 2
	GB, GHB, GHQ, GHBS	1C96620	12 18 30	H01 H02 H04	1 1 1
			42 48 54	H06 H03 H03 and H04	1 2 1 Each
			72 96	H05 H07	2 2

① Order the basic drawing number, along with the equivalent H–number that's needed (example 1C96619H01).

Table 19. Filler Covers

Device/Frame	Drawing Number	Item Number
F, J, K ②	4180B52	H01
QUICKLAG, GB, GHB ③	5155C62	H01

② Filler covers are required in addition to deadfront cover whenever MLO, SFL or TFL are specified.

③ Filler covers are required in addition to deadfront cover whenever a branch provision is specified.

1C96619H01

1C96620H01

5155C62H01

4180B52H01

Panelboard Trim Locks

Panelboard trims use different trim locks, see pictures below for styles and part numbers. Contact your nearest Satellite for availability on the styles listed below. See **Page 4** for Satellite listings.

Table 20. Panelboard Trim Locks

Description	Catalog Number
For use on left-handed door. (Hinged on left side.)	K80522
For use on right-handed door. (Hinged on right side.)	K80133
T–Handle lock, at one time used on all trims over 48.00 inches (1219.2 mm) in height. Also used on outdoor NEMA 12/3R trims.	K80429
Used on PRL4 lighting and power panels as standard.	1A32258H03
Used on PRL1, 2, 3 and PRL1a, 2a, 3a lighting panels as standard. WEM 2 key.	5155C81G01

K80522

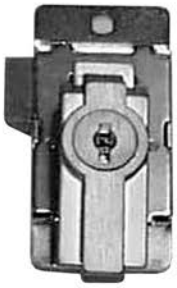

K80133

K80429

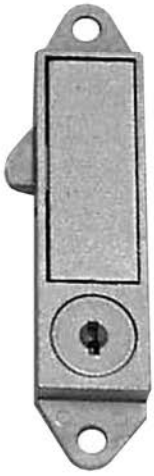

1A32258H03

5155C81G01

Panelboard Fastrim Clamps and Screw-on Hardware Kits

For panelboard trim clamps, contact your nearest Satellite for availability on the styles listed below. See **Page 4** for Satellite listings.

Table 21. Panelboard Fastrim Clamps and Screw-on Hardware Kits

Description	Style Number
Trim clamps — used on PRL1a, 2a, 3a fastrims. (6 per bag.)	**2C11641G02**
Trim screws — used on PRL1a, 2a, 3a, 4B standard trim. (10 per bag.)	**5157C83G06**
Chassis mounting hardware bag — PRL1a, 2a, 3a panels.	**7499A48G04**

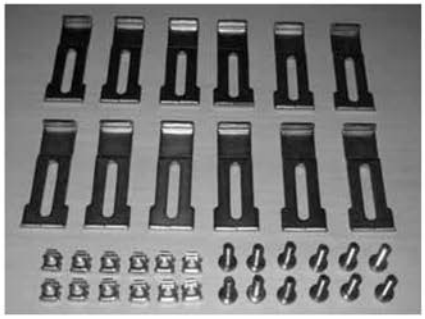

2C11641G02

5157C83G06

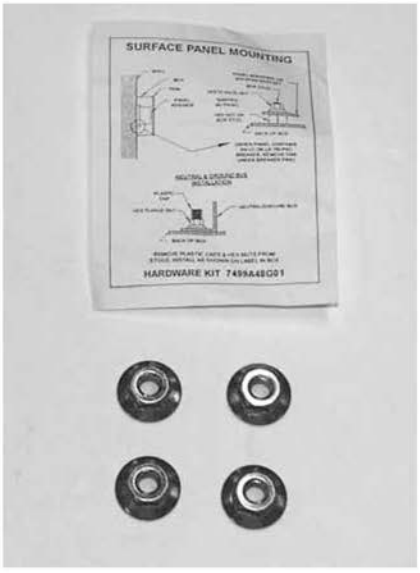

7499A48G04

PRL3a Parts Section	Page
Connector Kits, Branch Breakers	21
Quicklag	21
GB, GHB, GHBS	21
Twin Mounted F-Frame 150 Ampere Maximum	22
Single Mounted F-Frame 175 – 225 Ampere Maximum	22
Ground Assemblies	23
Service Entrance Kits	23
Deadfront Covers	23 – 25

PRL3a Horizontally Mounted Connector Kit Assemblies

Table 22. Connector Kit Assemblies

Devices	Circuits or Pole	3-Phase		1-Phase		Notes
		Catalog Number	Phase	Catalog Number	Phase	
BA, BAB, QBGF, QBH, QBHGF, QBGFEP, QBHGFEP	6	**KPRL3ABA06**	A/B/C	**KPRL3ABA06-1**	A/C	(2) 100 Ampere Devices Maximum
	12	**KPRL3ABA12**	A/B/C	**KPRL3ABA12-1**	A/C	
	18	**KPRL3ABA18**	A/B/C	**KPRL3ABA18-1**	A/C	
	24	**KPRL3ABA24**	A/B/C	**KPRL3ABA24-1**	A/C	
GB, GHB, GHQ, GHBS	6	**KPRL3AGB06**	A/B/C	**KPRL3AGB06-1**	A/C	
	12	**KPRL3AGB12**	A/B/C	**KPRL3AGB12-1**	A/C	
	18	**KPRL3AGB18**	A/B/C	**KPRL3AGB18-1**	A/C	
	24	**KPRL3AGB24**	A/B/C	**KPRL3AGB24-1**	A/C	

Three-phase kits contain A, B and C phase connectors. Single-phase kits contain A and C phase connectors, deadfront cover, hardware and instructions to twin mount breakers across from each other. **Maximum amperes connected to any one connector cannot exceed 200 amperes.**

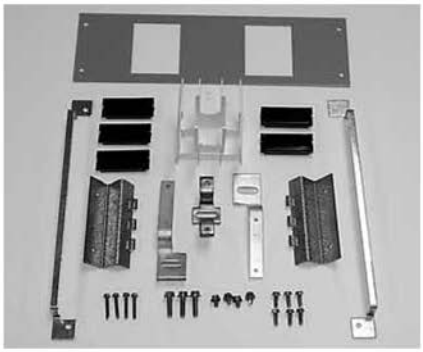

KPRL3ABA06

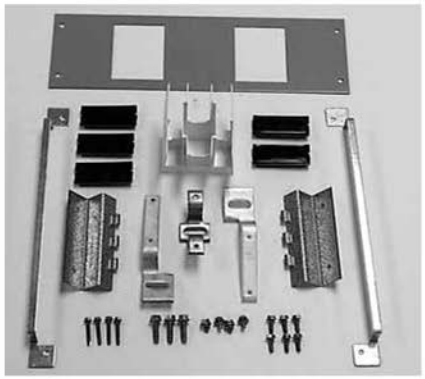

KPRL3AGB06

PRL3a F-Frame Horizontally Mounted Connector Kit Assemblies

Table 23. Connector Kit Assemblies

Devices	Circuits or Pole	3-Phase		1-Phase		Notes
		Catalog Number	Phase	Catalog Number	Phase	
EHD, FD, FDB, HFD, FDC (150 Ampere Maximum Twin Mount)	3-Pole Breaker 2-Pole Breaker 1-Pole Breaker	**KPRL3AFD3** **KPRL3AFD2** **KPRL3AFD1**	A/B/C A/C A/C	— **KPRL3AFD2** **KPRL3AFD1**	— A/C A/C	(2) 150 Ampere Devices Maximum
FD, HFD, FDC, ED, EDH, EDC (175 – 225 Ampere Single Mount) ①	3-Pole Breaker 2-Pole Breaker	**KPRL3AED3** **KPRL3AED2**	A/B/C A/C	— **KPRL3AED2**	— A/C	(1) 225 Ampere Maximum Single Mounted

① F-Frame devices rated above 150 amperes must be single mounted. No twin mounting acceptable.

Connector kits contain phase connectors, deadfront cover, hardware and instructions to mount breakers. Order breakers separately when ordering connector kit.

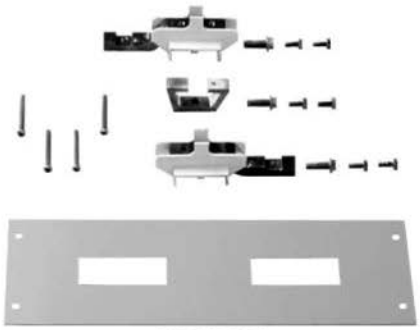

KPRL3AFD3

PRL3a Ground Assemblies

Table 24. PRL3a Ground Assemblies

Material	Standard	Isolated
	Catalog Number	
Aluminum/Copper Copper Only	5158C05G02 5158C05G04	2C11296G02 2C11296G04

5158C05G02

PRL3a Service Entrance Kits

Table 25. PRL3a Service Entrance Kits

Style Number ①	Panel Ampere Rating	Tin-Plated Aluminum	Bare Copper	Silver-Plated Copper	Tin-Plated Copper
		Item Number			
Mechanical Main Lugs or Main Breakers					
5078A98	100 250 – 600	G01 G13	G02 G14	G03 G15	G04 G16
Crimp Main Lugs					
5078A98	100 250 – 600	G05 G17	G06 G18	G07 G19	G08 G20
Copper Main Lugs					
5078A98	100 250 – 600	G09 G21	G10 G22	G11 G23	G12 G24

① When ordering, use complete style number (example 100 Ampere Tin-Plated Aluminum 5078A98G01).

5078A98G01

PRL3a Deadfront Covers

Table 26. Assembly ②

Style Number ③	Chassis Height/Item Number				
	14X	23X	31X	40X	53X
6559C59	G01	G02	G03	G04	G05

② Assembly groups include the frame only (two rails and two end covers). Reference **Pages 24** and **25** for specific device covers. All connector kits ship with a deadfront cover for that device.

③ When ordering, use complete style number (example 14X High Assembly 6559C59G01).

6559C59G01

PRL3a Vertical Devices Deadfront Covers

Table 27. Vertical Mounting Position

Device/Frame	Trip Unit Type	Style Number ①	"X" Space Required	Item Number	
				Without Lock-offs ①	With Lock-offs ①
EHD, FD, FDB, HFD, FDC, ED, EDH, EDC (Top) ②	N/A	**4176B68**	7X	H01	H03
EHD, FD, FDB, HFD, FDC, ED, EDH, EDC (Bottom) ②	N/A		7X	H04	H05
FD, HFD, FDC, ED, EDH (Top) ③	N/A	**4180B93**	10X	H01	H03
FD, HFD, FDC, ED, EDH (Bottom) ③				H04	H05
J-Frame (Bottom)	N/A	**4176B60**	14X	H01	H02
J-Frame (Top)			14X	H03	H04
K-Frame (Bottom)	Thermal-Mag.	**4176B61**	15X	H01	H02
K-Frame (Bottom)	Electronic		15X	H03	H04
K-Frame (Top)	Thermal-Mag.		15X	H05	H06
K-Frame (Top)	Electronic		15X	H07	H08
L-Frame (Bottom)	Thermal-Mag.	**4176B51**	17X	H01	H02
L-Frame (Bottom)	Electronic		17X	H03	H04
L-Frame (Top)	Thermal-Mag.		17X	H05	H06
L-Frame (Top)	Electronic		17X	H07	H08
FB-P (Top Only)	N/A	**4176B70**	9X	H02	H02
LA-P (Top Only)	N/A	**4176B57**	21X	H01	H01
FCL	N/A	**4176B70**	9X	H01	H01
LCL (Top)	N/A	**4176B56**	21X	H01	H02
LCL (Bottom)	N/A		21X	H03	H04
Neutral/Blank Cover	N/A	**4176B72**	1X	H01	—
			2X	H02	
			3X	H03	
			4X	H04	
			5X	H05	
			6X	H06	
			7X	H07	
			8X	H08	
			9X	H09	
			10X	H10	
			11X	H11	
			12X	H12	
J-Frame Sub-Feed Twin Bottom	N/A	**4176B79**	20X	H01	H02 (2 L/O) H03 (1 L/O RT) H04 (1 L/O LT)
J-Frame Sub-Feed Twin Top	N/A	**4176B79**	20X	H05	H05 (2 L/O) H07 (1 L/O RT) H08 (1 L/O LT)
PT363 (Top)	N/A	**4180B79**	7X	H01	—
PT363 (Bottom)	N/A		7X	H02	
PT364 (Top)	N/A		9X	H03	
PT364 (Bottom)	N/A		9X	H04	

① When ordering covers, order complete style and item numbers (example 4176B68H01).
② 4/0 Maximum acceptable terminal size.
③ 300 kcmil maximum acceptable terminal size.

J Main 4176B60H04

Neutral Blank Cover 4176B72H04

PRL3a Horizontal Devices Deadfront Covers

Table 28. Horizontal Mounting Position

Device/Frame	Device Poles	Style Number ①	Total Circuit Quantity	"X" Space Required	Item Number
EHD, FD, FDB, HFD, FDC (Twin Mounted)	1, 2 or 3	**4178B08**	6 12 18 24 30 36 42 48	3X 6X 9X 12X 15X 18X 21X 24X	H01 H02 H03 H04 H05 H06 H07 H08
EHD, FD, FDB, HFD, FDC (Twin Mounted)	1 or 2	**4179B39**	4 8 12 16 20 24 28 32	2X 4X 6X 8X 10X 12X 14X 16X	H01 H02 H03 H04 H05 H06 H07 H08
EHD, FD, FDB, HFD, FDC (Twin Mounted)	1	**4179B40**	2	1X	H01
FD, HFD, FDC, ED, EDH, EDC (Single Mounted)	3	**4179B41**	3	3X	H01
FD, HFD, FDC, ED, EDH, EDC (Single Mounted)	2	**4179B42**	2	2X	H01
CA, CAH, HCA	3	**4176B66**	3	3X	H01
CA, CAH, HCA	2	**4176B80**	2	2X	H01
BA, BAB, BABRP, BABRSP QBH, QBGF, QBGFEP, QBHGFEP	1, 2 or 3	**4176B67**	6 12 18 24	3X 5X 8X 10X	H01 H02 H03 H04
GB, GHB, GHBS, GHBGFEP, HGHB, GHQ	1, 2 or 3	**4176B69**	6 12 18 24	3X 5X 8X 10X	H01 H02 H03 H04
Pow-R-Command Controller	N/A	**4180B91**	N/A	5X	H01
Pow-R-Command Expansion	N/A	**4180B91**	N/A	7X 16X	H02 H03

① When ordering covers, order complete style and item number (example 4178B08H01).

PRL3a Deadfront Cover Blank Fillers

Table 29. PRL3a Deadfront Cover Blank Fillers

Device/Frame	Poles	Style Number
F-Frame C-Frame C-Frame	1, 2 or 3 2 3	**4178B06H01** **6555C40H01** **6555C41H01**
QUICKLAG, GB, GHB, GHBS	1, 2 or 3	**5155C62H01**

BAB Cover 4176B67H01

PRL4B/F Parts Section ***Page***

Vented Cover Assemblies and Side Gutter Covers **26**
PRL4 Blank Covers **27**
PRL4 Breaker Connector Kits . . **28**
PRL4 Fusible FDPW Switch Connector Kit **29**
PRL4 Breaker Retrofit Kits **30**
PRL4 Fusible Retrofit Kits. **30**
PRL4 Energy Sentinel. **31**
PRL1a, 2a, 3a and PRL4 Special Trims and Enclosures **32**

PRL4 Vented Cover Assemblies

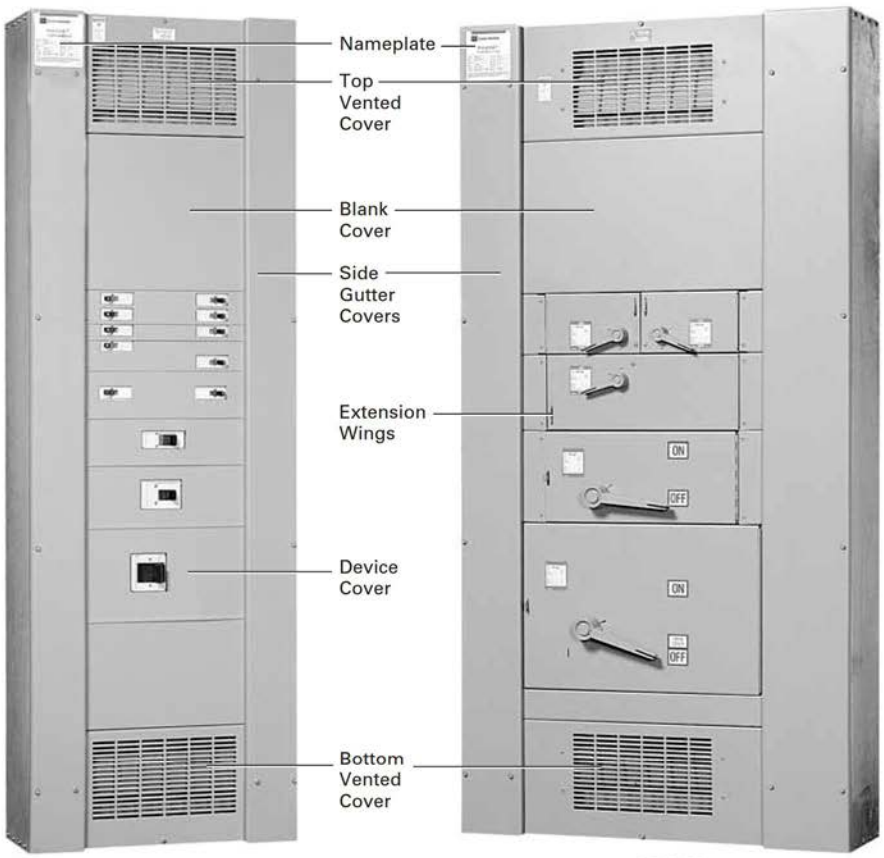

PRL4B *PRL4F*

Table 30. Vented Cover Assemblies and Side Gutter Covers — Dimensions in Inches (mm)

NEMA 1 Box				Vented Cover Assembly ② Style Number	Side Gutter Covers			
Dimensions			Catalog Number		Left		Right	
Height	Width	Depth ①			Size	Style Number	Size	Style Number
57.00 (1447.8) 73.00 (1854.2) 90.00 (2286.0)	24.00 (609.6) 24.00 (609.6) 24.00 (609.6)	10.40 (264.2)	**BX2457** **BX2473** **BX2490**	**6574C74G02** **6574C74G03** **6574C74G04**	5.00 (127.0) x 57.00 (1447.8) 5.00 (127.0) x 73.00 (1854.2) 5.00 (127.0) x 90.00 (2286.0)	**6555C20H01** **6555C21H01** **6555C25H01**	5.00 (127.0) x 57.00 (1447.8) 5.00 (127.0) x 73.00 (1854.2) 5.00 (127.0) x 90.00 (2286.0)	**6555C20H01** **6555C21H01** **6555C25H01**
73.00 (1854.2) 90.00 (2286.0)	36.00 (914.4) 36.00 (914.4)		**BX3673** **BX3690**	**6574C74G05** **6574C74G06**	6.00 (152.4) x 73.00 (1854.2) 6.00 (152.4) x 90.00 (2286.0)	**6555C22H01** **6555C26H01**	8.00 (203.2) x 73.00 (1854.2) 8.00 (203.2) x 90.00 (2286.0)	**6555C23H01** **6555C27H01**
73.00 (1854.2) 90.00 (2286.0)	44.00 (1117.6) 44.00 (1117.6)		**BX4473** **BX4490**	**6574C74G05** **6574C74G06**	8.00 (203.2) x 73.00 (1854.2) 8.00 (203.2) x 90.00 (2286.0)	**6555C23H01** **6555C27H01**	14.00 (355.6) x 73.00 (1854.2) 14.00 (355.6) x 90.00 (2286.0)	**6555C24H01** **6555C28H01**

① Covers add .90 inches (22.9 mm) to box depth for overall enclosure depth of 11.30 inches (287.0 mm).
② Cover assembly consists of 2 side rails, top and bottom vented covers.
Important: Order individual device covers and blanks separately.

PRL4 Blank Covers

Used to cover blank space on chassis. All PRL4 cover heights are measured in "X" units. 1X equals 1.38 inches (35.1 mm).

Table 31. PRL4 Blank Covers

Cover Size	Style Number	
	24.00-Inch (609.6 mm) Width Box	36.00, 44.00-Inch (914.4, 1117.6 mm) Width Box
1X	6554C01H01	6554C02H01
2X	6554C01H02	6554C02H02
3X	6554C01H03	6554C02H03
4X	6554C01H13	6554C02H13
5X	6554C01H14	6554C02H14
6X	6554C01H04	6554C02H04
7X	6554C01H05	6554C02H05
9X	6554C01H06	6554C02H06
10X	6554C01H07	6554C02H07
11X	6554C01H08	6554C02H08
12X	6554C01H09	6554C02H09
13X	6554C01H10	6554C02H10
15X	6554C01H11	6554C02H11
20X	6554C01H12	6554C02H12

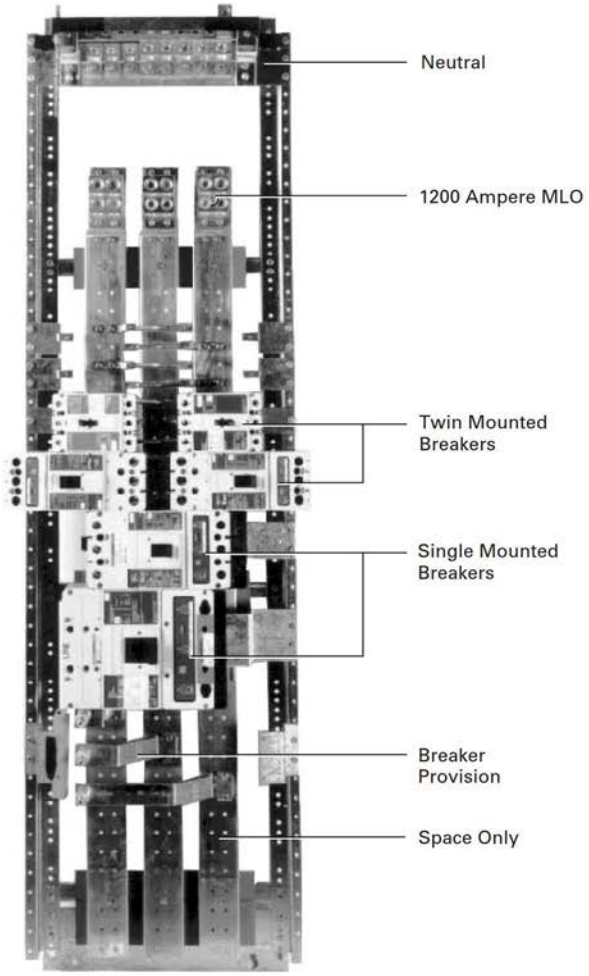

PRL4B Interior

PRL4 Breaker Connector Kits

Breaker Connector Kits

Each kit includes copper connectors, mounting brackets, covers, hardware and instructions for mounting breaker(s) in a PRL4. **Breakers are not included.** Contact your local Satellite plant for availability and application information (see **Page 4**).

Connector Kit

Each kit includes copper connectors mounting brackets, cover, hardware and instructions.

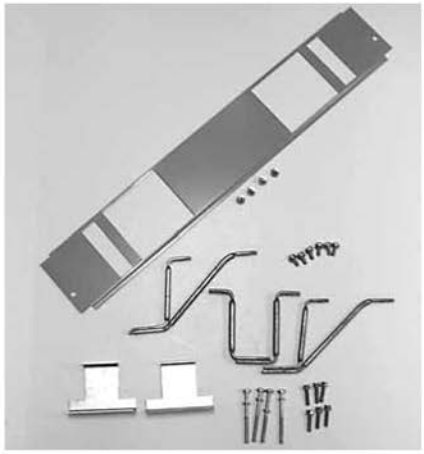

Connector Kit

Table 32. Breaker Connector Kits

Breaker Frame	Space Required		Poles	Mounting Type	Connector Kit Catalog Number
	Inches (mm)	"X"			
EHD, FD, HFD	2.75	2X	1 ①	Twin	**KPRL4FD1**
EHD, FD, FDB, HFD, FDC	(69.9)		2	Twin	**KPRL4FD2**
ED, EDH, EDC			2	Twin	**KPRL4ED2**
EHD, FD, FDB, HFD, FDC	4.13	3X	3	Twin	**KPRL4FD**
FCL, FB-P, FD/LFD	(104.9)		3	Twin	**KPRL4FBP**
ED, EDH, EDC			3	Twin	**KPRL4ED**
JD, JDB, HJD, JDC			2, 3	Single	**KPRL4JDS**
JD, JDB, HJD, JDC			2,3	Twin	**KPRL4JDT** ②
DK, KD, KDB, HKD, KDC	5.50	4X	2, 3	Single	**KPRL4KDS**
DK, KD, KDB, HKD, KDC	(139.7)		2,3	Twin	**KPRL4KDT** ③
CKD, CHKD			2,3	Single	**KPRL4CKD** ④
LCL	8.25	6X	2, 3	Single	**KPRL4LCL** ②
LA-P	(209.5)		2, 3	Single	**KPRL4LAP** ②
LD, LDB, HLD, LDC, CLD, LC			2, 3	Single	**KPRL4LD** ②
MDL, HMDL			2, 3	Single	**KPRL4MC** ②
NB-P			2, 3	Single	**KPRL4NBP** ③
CND, CHND			3	Single	**KPRL4CND** ③④
ND, HND			2, 3	Single	**KPRL4ND** ②

① Two sets of twin mounted 1-pole breakers.
② 36.00-inch (914.4 mm) minimum box width required.
③ 44.00-inch (1117.6 mm) box width required.
④ Requires density rated bus in existing panel chassis.

Hardware Kit

Each kit includes mounting bracket(s) and mounting hardware only. Use the appropriate Connector Kit catalog number and add an "H" to designate hardware only (example: KPRL4FD-H).

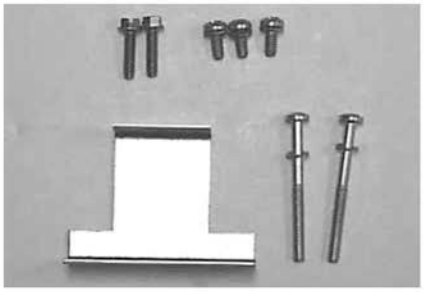

Hardware Kit

Standard Ground Bus

Copper bus with (3) 6 – 300 kcmil lugs plus a 24-circuit terminal bar with #14 – 1/0 wire range.

6572C746G01

PRL4 Fusible Connector Kits

Fusible Switch Connector Kits

Each kit includes copper connectors, extension wings (when required), hardware and instructions to mount a **fusible** switch. **Switches are not included.** Contact your local Satellite plant for availability and application information (see **Page 4**).

Table 33. Fusible Switch Connector Kits

Switch Height		Switch Ampere Rating	3-Pole Switch		Connector Kit
Inches (mm)	"X" Space Required		240 Volts	600 Volts	
			Catalog Number		
5.50 (139.7)	4X	30 – 30 60 – 60 100 – 100	**FDPWT3211R** **FDPWT3222R** **FDPWT3233R**	**FDPWT3611R** **FDPWT3622R** —	— **KPRL44X** ① —
6.88 (174.8)	5X	100 – 100	—	**FDPWT3633R**	**KPRL45X** ①
8.25 (209.6)	6X	200 200 – 200	**FDPBS324R** **FDPBT3244R**	**FDPBS364R** **FDPBT3644R**	**KPRL4B6XS** **KPRL4B6XT** ②
12.38 (314.5)	9X	400	**FDPW325R**	**FDPW365R**	**KPRL4W9X**
15.13 (384.3)	11X	600 800	**FDPW326R** **FDPW327**	**FDPW366R** **FDPW367**	**KPRL4W11X** **KPRL4W11X** ②
20.63 (524.0)	15X	1200	**FDPW328**	**FDPW368**	**KPRL4W15X** ②

① These connector kits will fit the FDP and FDPW switches.
② 44.00-inch (1117.6 mm) box width required for both R and J fuse applications.

PRL4 Breaker and Fusible Switch Retrofit Kits

Breaker Retrofit Kits

Each kit includes **one** breaker, copper connectors, covers, hardware and instructions to mount in a PRL4.

Table 34. Breaker Retrofit Kits

Breaker Frame	Frame Ampere Rating	Trip Range	Mounting Type
EHD	100	15 – 100	Twin
FDB		15 – 100	Twin
FD		15 – 100	Twin
HFD		15 – 100	Twin
FDC		15 – 100	Twin
FCL		15 – 100	Twin
FB-P		15 – 100	Twin
FDB	150	110 – 150	Twin
FD	225	110 – 225	Twin
HFD		110 – 225	Twin
FDC		110 – 225	Twin
ED		100 – 225	Twin
EDH		100 – 225	Twin
EDC		100 – 225	Twin
JD	250	70 – 250	Twin/Single
HJD		70 – 250	Twin/Single
JDC		70 – 250	Twin/Single
DK	400	100 – 400	Twin/Single
KD		100 – 400	Twin/Single
HKD		100 – 400	Twin/Single
KDC		100 – 400	Twin/Single
CKD		100 – 400	Single
LCL		125 – 400	Single
LA-P		70 – 400	Single
LD	600	300 – 600	Single
CLD		300 – 600	Single
HLD		300 – 600	Single
CHLD		300 – 600	Single
LDC		300 – 600	Single
CLDC		300 – 600	Single
MDL	800	300 – 800	Single
CMDL		300 – 800	Single
HMDL		300 – 800	Single
CHMDL		300 – 800	Single
ND	1200	600 – 1200	Single
CND		600 – 1200	Single
HND		600 – 1200	Single
CHND		600 – 1200	Single
NDC		600 – 1200	Single
CNDC		600 – 1200	Single

How to Order a Breaker Retrofit Kit by Catalog Number

Use "KPRL4" prefix and add catalog number of breaker as shown below. Use suffix "T" or "S" to denote twin or single mounting. Twin mounting indicates that one set of connectors is required to mount two breakers (of similar frames) opposite one another. RETROFIT KIT INCLUDES ONE BREAKER ONLY, FOR EITHER SINGLE OR TWIN MOUNTED APPLICATIONS.

Table 35. Catalog Numbering System — Breaker Retrofit Kit

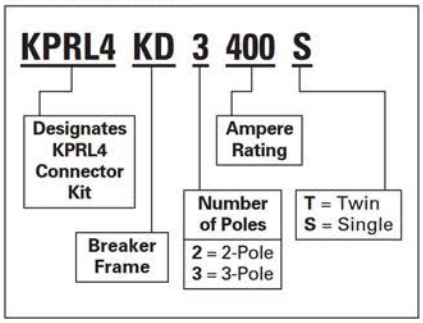

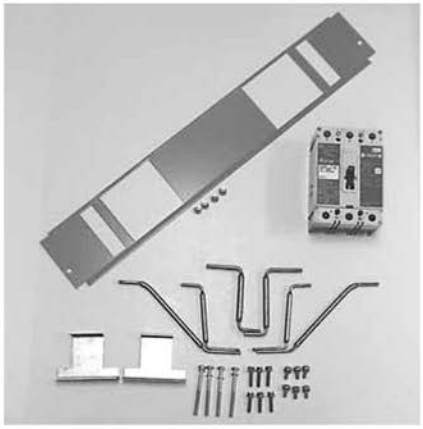

Breaker Retrofit Kit

Fusible Retrofit Kits

Each kit includes a 3-pole switch, copper connectors, extension wings (if required), hardware and instructions to horizontally mount in a PRL4.

Table 36. Fusible Retrofit Kits

Switch Ampere Rating	Switch Type	Mounting Type
30 – 30	FDPW	Twin
60 – 60	FDPW	Twin
100 – 100	FDPW	Twin
100	FDPW	Single
200	FDPB	Single
200 – 200	FDPB	Twin
400	FDPW	Single
600	FDPW	Single
800	FDPW	Single
1200	FDPW	Single

How to Order a Fusible Retrofit Kit by Catalog Number

Use "KPRL4" prefix and add catalog number of appropriate switch (refer to **Page 29** for 3-pole switch catalog number).

Example: The Retrofit Kit catalog number for a 600 volt, 100 ampere twin FDPW switch is:

Table 37. Catalog Numbering System — Fusible Retrofit Kit

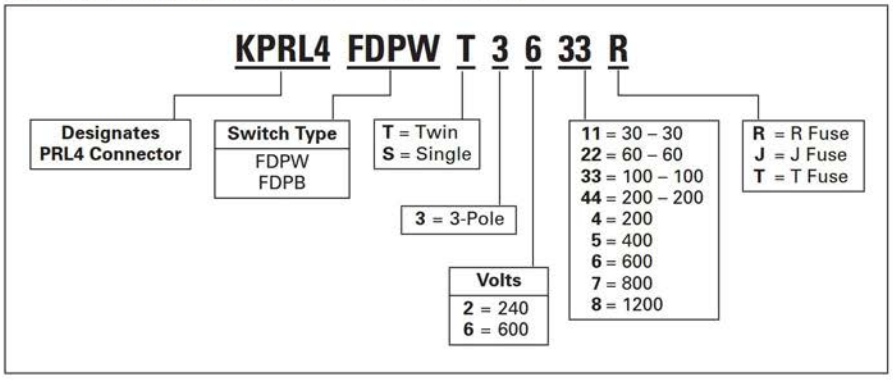

PRL4 Energy Sentinel

Energy Sentinel

The IQ Energy Sentinel is a submetering device that mounts directly on a circuit breaker and monitors both power and energy with an overall accuracy of 99%.

This high system accuracy is achieved by use of the Cutler-Hammer SURE Plus Chip, which is a sophisticated microprocessor.

All that is necessary to complete an IQ Energy Sentinel installation is to insert it into the load side of a breaker, feed the load conductors through it, and run the shielded twisted pair wire for communications. The IQ Energy Sentinel has a nonvolatile memory, is powered by the circuit breaker, and can be applied on 3-phase, 4-wire or single-phase, 3-wire systems.

The space-saving design characteristics of the IQ Energy Sentinel mean they can be quickly and easily retrofitted onto Series C® circuit breakers in existing equipment...with no additional space required. Additionally, IQ Energy Sentinel can be installed when upgrading to Series C from older breakers that are physically interchangeable...with no additional space required.

Power and energy information from IQ Energy Sentinels can be communicated to a PC, a panel mounted Central Energy Display (CED), or even existing building management or distribution control systems.

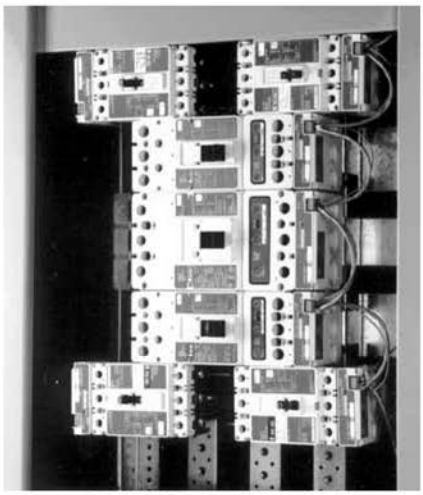

Energy Sentinels Installed

IQ Central Energy Display

IQ Central Energy Display

The IQ Central Energy Display may be panel mounted or located remotely (up to 7500 feet [2286 m] away). It displays power, peak demand, and energy readings of up to 50 IQ Energy Sentinels and eight IQ Data Plus meters.

Additional capabilities include: peak demand alarming, demand and energy totals for groups of IQ Energy Sentinels and IQ Data Plus 11 digital meters.

Refer to your local Satellite for retrofit and upgrade options available for existing equipment.

Table 38. Energy Sentinel

Series C Breaker Frame	Voltage ac	Maximum Amperes	Catalog Number
F	120/208, 120/240	150	**IQESF208**
F	277/480	150	**IQESF480**
J	120/208, 120/240	250	**IQESJ208**
J	277/480	250	**IQESJ480**
K	120/208, 120/240	350	**IQESK208**
K	277/480	350	**IQESK480**

PRL1a, 2a, 3a Special Trims and Enclosures

Ventilated Trim

Required on PRL1a, 2a, 3a, 600 ampere and above panels only. Order by adding the letter "V" to the standard trim catalog number. **Add 10% to standard trim list price.**

Example: LT2072S becomes **LTV2072S.**

Ventilated Trim

Fastrim

Used when concealed trim mounting hardware is required for PRL1a, 2a and PRL3a. Trim clamps are included and shipped with the trim. Order by adding the letter "F" to the standard trim catalog number. **Add 20% to standard trim list price.**

Example: LT2072S becomes **LTF2072S.**

For trim clamps only, refer to **Page 20.**

Fastrim

Door-In-Door

Piano hinge on the right side of the trim provides access to the wiring gutters without requiring removal of the trim. Order by adding the letters "DD" to the standard trim catalog number. **Add 20% to standard trim list price.**

Example: LT2072S becomes **LTDD2072S.**

Door-in-Door

Type 12/3R Enclosures

The complete enclosure consists of a box and trim. The enclosure meets code requirements for both Type 12 (dust-tight) and Type 3R (rainproof) standards. Features include a laser cut trim with rounded corners, concealed hinges and a T-handle lock. Gasketing is provided around the trim door. The box is gasketed and made from code gauge steel with dripshield and is painted ANSI-61.

Table 39. Type 12/3R Enclosures for PRL1a, 2a, 3a

Box Dimensions in Inches (mm)			Catalog Number	
Height	Width	Depth	Box	Trim
24.00 (609.6) 36.00 (914.4) 48.00 (1219.2)	20.00 (508.0)	6.00 (152.4)	**VWPB2024** **VWPB2036** **VWPB2048**	**LWPT2024** **LWPT2036** **LWPT2048**
60.00 (1524.0) 72.00 (1828.8) 90.00 (2286.0)			**VWPB2060** **VWPB2072** **VWPB2090**	**LWPT2060** **LWPT2072** **LWPT2090**

Type 12/3R Enclosures

PRL4 Special Trims and Enclosures

Door-In-Door Trim

Door-In-Door Trim

A piano hinge on the right side of the trim provides access to the wiring gutter without requiring the removal of the trim. When used with a standard PRL4 box, a special mounting channel must be used to add extra depth to the enclosure.

An extra depth box, not requiring a mounting channel, is another available option. Contact your local Satellite for ordering information.

Table 40. Special Trims and Enclosures

Standard Box Catalog Number	Mounting Channel Style Number	Door-In-Door Trim Catalog Number	
		Surface	Flush
BX2457 BX2473 BX2490	8708C82G02 8708C82G03 8708C82G04	LDD2457STW LDD2473STW LDD2490STW	LDD2457FTW LDD2473FTW LDD2490FTW
BX3673 BX3690 BX4473 BX4490	8708C82G05 8708C82G06 8708C82G07 8708C82G08	LDD3673STW LDD3690STW LDD4473STW LDD4490STW	LDD3673FTW LDD3690FTW LDD4473FTW LDD4490FTW

Type 12/3R Enclosures

Type 12, 24.00 Inches (609.6 mm) Wide

Type 3R, 36.00 Inches (914.4 mm) Wide

PRL4 enclosures are available in both Type 12 (dust-tight) and Type 3R (rainproof) designs. The 24.00-inch (609.6 mm) wide enclosure includes a single hinged door while the 36.00-inch (914.4 mm) wide is provided with double hinged doors. The side gutter covers are an integral part of the box in all styles. Sizes and catalog numbers are shown in the table below.

Table 41. Type 12/3R Enclosures

Enclosure Dimensions in Inches (mm)			Catalog Number	
Height	Width	Depth	Type 3R	Type 12
57.00 (1447.8) 73.00 (1854.2) 90.00 (2286.0)	24.00 (609.6) 24.00 (609.6) 24.00 (609.6)	13.90 (353.1)	RPC2457 RPC2473 RPC2490	DPC2457 DPC2473 DPC2490
73.00 (1854.2) 90.00 (2286.0)	36.00 (914.4) 36.00 (914.4)		RPC3673 RPC3690	DPC3673 DPC3690

PRL5P Parts Section	*Page*
PRL5P Chassis Layout	**35**
PRL5P Breaker Adapter Unit Catalog Numbers	**36**
PRL5P Branch Breaker Information	**37**
PRL5P Main or Through-Feed Lugs	**38**
PRL5P Neutrals and Grounds	**39**
PRL5P Boxes, Trims and Filler Plates	**40**

Ordering Procedure

Step 1 Select the correct part or Branch Device. When selecting, you need to know the following:

- Panelboard type.
- Amperage.
- System voltage.
- Available short circuit rating.
- Number of poles available.
- Size and number of wires per phase.
- "X" space required.

Step 2 Refer to the 5P panelboard layout on **Page 35** to verify the amount of "X" space available.

Step 3 Create a 5P breaker unit catalog number, by following the instructions on **Page 36**, or order the catalog number for parts on **Pages 38** through **40**.

Step 4 Determine if extra filler covers are required. Additional filler covers may be necessary to fill the unused space. Refer to **Page 40** for filler plate information.

PRL5P Chassis Layout

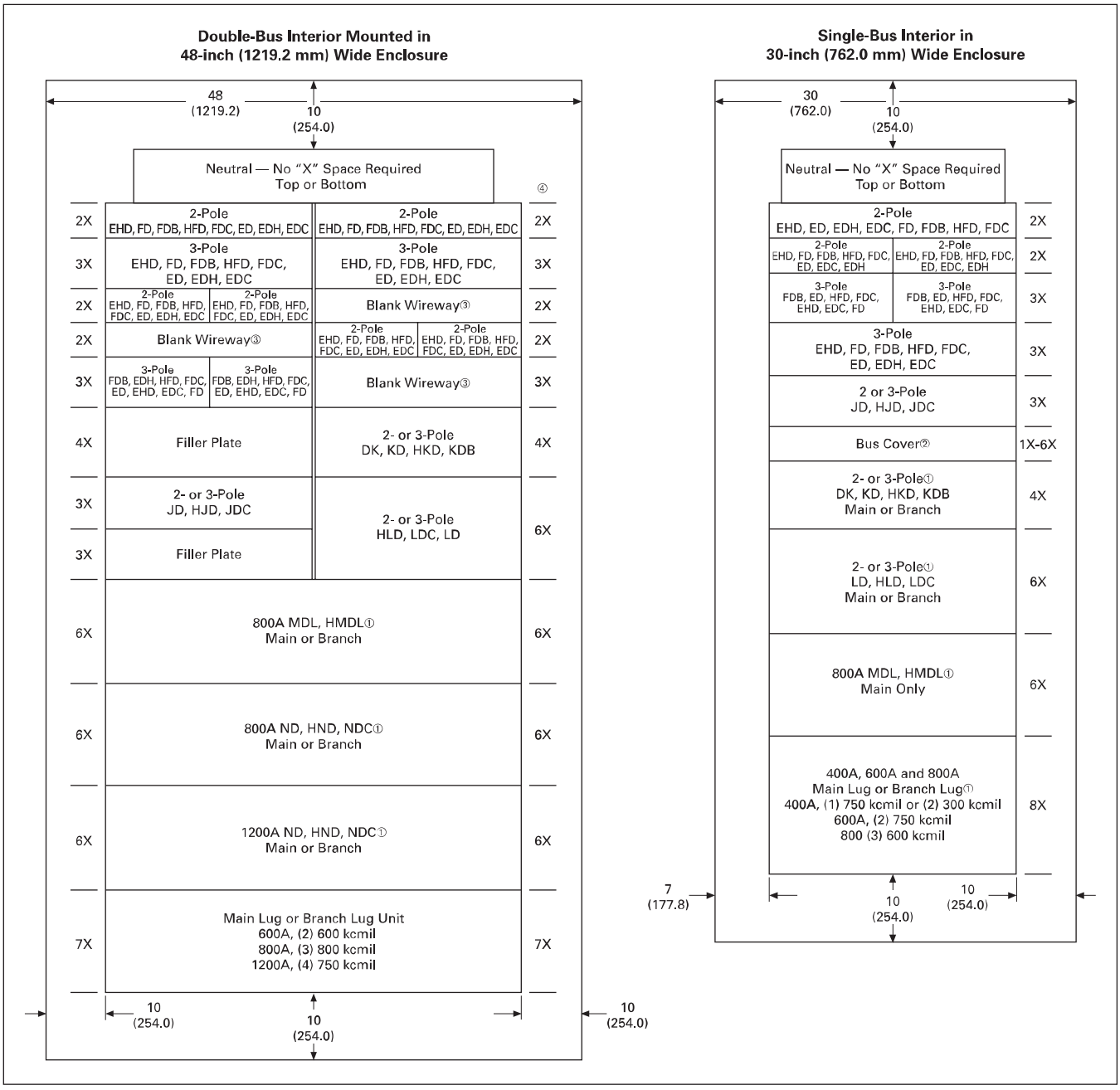

Figure 3. PRL5P Chassis Layout — Dimensions in Inches (mm)

① If used as a main device, must be mounted at the neutral end of panel.
② Fixed bus covers are required for unused spaces if NEC® six circuit disconnect rule is to be met.
③ Blank wireway fillers are required opposite any dual breaker unit.
④ One "X" = 1.38 inches (35.1 mm).

PRL5P Breaker Assemblies Catalog Numbers

Table 42. Catalog Numbering System — 5P Single or Twin Breakers with Adapters

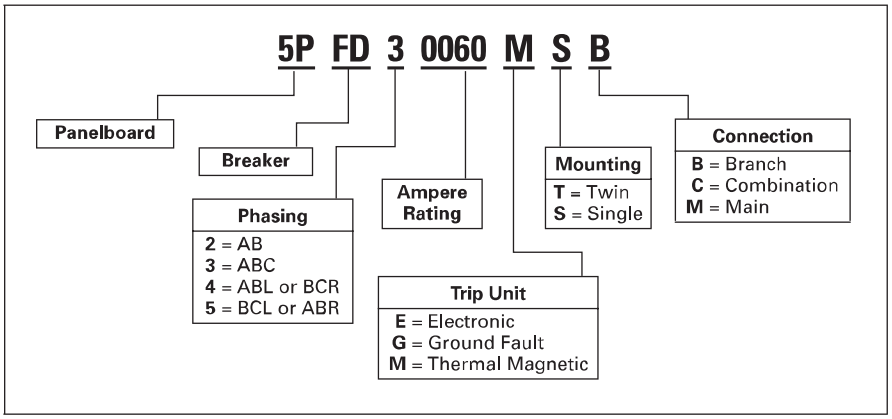

A plug-on unit is a complete assembly with a circuit breaker and mounting adapter to mount on a 5P panelboard.

Single indicates units that may be mounted in a single or double bus panel, and twin indicates double bus panels only. See **Tables 44** and **45** on **Page 37**.

Table 43. Catalog Numbering System — 5P Dual Breakers with Adapters

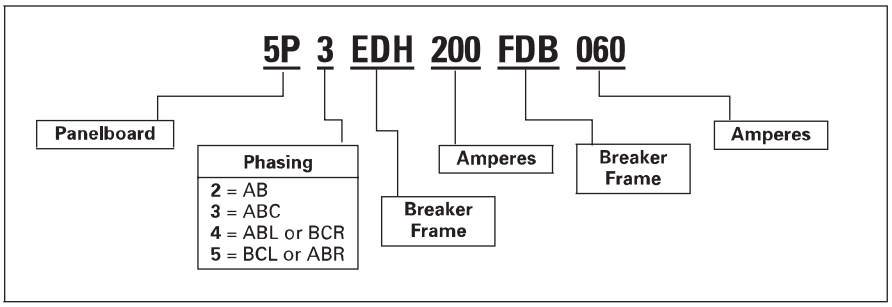

Any two F-Frame breakers listed may be mounted on the same 2X or 3X dual breaker adapter.

Dual breaker adapters may be used in single or double bus panels. Dual breaker adapters can **NOT** be mounted across from another adapter in a double bus panel. See **Table 46** on **Page 37**.

Branch Devices

Single-pole breakers in single adapter units. Include two or three single-pole 15 – 60 ampere assembled on one unit. (One X = 1.38 inches [35.1 mm])

Table 44. Single-Pole Breakers in Single Adapter Units

Breaker Type	Ampere Rating	Interrupting Rating (kA Sym.)				"X" Space Required
		120 Vac	240 Vac	277 Vac	125 Vdc	
EHD	15 – 60	—	—	14	10	2X
FD	15 – 60	—	—	25	10	2X
HFD	15 – 60	—	—	65	10	2X
EHD	15 – 60	—	—	14	10	3X
FD	15 – 60	—	—	25	10	3X
HFD	15 – 60	—	—	65	10	3X

Table 45. 2- and 3-Pole Breakers in Single Adapter Units

Breaker Type	Ampere Rating	Interrupting Rating (kA Sym.)				"X" Space Required
		240 Vac	480 Vac	600 Vac	250 Vdc	
ED	100 – 225	65	—	—	—	3X
EDH	100 – 225	100	—	—	—	3X
EDC	100 – 225	200	—	—	—	3X
EHD	15 – 60	18	14	—	10	3X
EHD	70 – 100	18	14	—	10	3X
FD	15 – 60	65	25	18	10	3X
FD	70 – 100	65	25	18	10	3X
FD	110 – 225	65	25	18	10	3X
HFD	15 – 60	100	65	25	22	3X
HFD	70 – 100	100	65	25	22	3X
HFD	110 – 225	100	65	25	22	3X
FDC	15 – 60	200	100	35	22	3X
FDC	70 – 100	200	100	35	22	3X
FDC	110 – 225	200	100	35	22	3X
JD, JDB	70 – 225	65	35	18	10	3X
JD, JDB	250	65	35	18	10	3X
HJD	70 – 225	100	65	25	22	3X
HJD	250	100	65	25	22	3X
JDC	70 – 225	200	100	35	22	3X
JDC	250	200	100	35	22	3X
DK	100 – 400	65	—	—	—	4X
KD, KDB	250 – 400	65	35	25	10	4X
HKD	250 – 400	100	65	35	22	4X
KDC	250 – 400	200	100	50	22	4X
LD, LDB	300 – 600	65	35	25	22	6X
HLD ①②	300 – 600	100	65	35	25	6X
LDC	300 – 600	200	100	50	25	6X
MDL ①②	400 – 800	65	50	25	22	6X
HMDL ①②	400 – 800	100	65	35	25	6X
ND	400 – 1200	65	50	25	—	6X
HND ①②	400 – 1200	100	65	35	—	6X
NDC	400 – 1200	200	100	50	—	6X

① For use only in double bus chassis panelboards.
② 100% rated breakers are **NOT** available in 5P panelboards.

Dual breaker adapters — Any two breakers listed in **Table 46** may be mounted on the same 2X or 3X dual breaker adapter.

Dual breaker adapters may be used in single or double bus chassis. Dual breaker adapters can **NOT** be mounted across from another in a double bus chassis. (One X = 1.38 inches [35.1 mm])

Table 46. Dual Breaker Adapters

Breaker Type	Ampere Rating	Interrupting Rating (kA Sym.)				"X" Space Required
		240 Vac	480 Vac	600 Vac	250 Vdc	
ED	100 – 225	65	—	—	—	3X
EDH	100 – 225	100	—	—	—	3X
EDC	100 – 225	200	—	—	—	3X
EHD	15 – 60	18	14	—	10	3X
EHD	70 – 100	18	14	—	10	3X
FD	15 – 60	65	25	18	10	3X
FD	70 – 100	65	25	18	10	3X
FD	110 – 225	65	25	18	10	3X
HFD	15 – 60	100	65	25	22	3X
HFD	70 – 100	100	65	25	22	3X
HFD	110 – 225	100	65	25	22	3X
FDC	15 – 60	200	100	35	22	3X
FDC	70 – 100	200	100	35	22	3X
FDC	110 – 225	200	100	35	22	3X

5PFD30060MSB

5P3EDH200FDB060

PRL5P Main or Through-Feed Lugs

Table 47. PRL5P Main or Through-Feed Lugs

Description	Ampere Rating	Wire Size Range	"X" Space Required	Catalog Number
Single Bus Chassis Mounting				
Ampere Lug Unit	400	(1) 1/0 – 500 or (2) 1/0 – 250 kcmil	8X	**5PLUG3400SC**
Ampere Lug Unit	600	(2) 1/0 – 500 kcmil	8X	**5PLUG3600SC**
Ampere Lug Unit	800	(2) #2 – 500 or (3) #2 – 400 kcmil	8X	**5PLUG3800SC**
Double Bus Chassis Mounting				
1200 Ampere Lug Unit	600 – 1200	(4) #4 – 750 kcmil	7X	**5PLUG31200TC**

5PLUG3800SC

5PLUG31200TC

PRL5P Neutrals and Grounds

Neutral Assembly

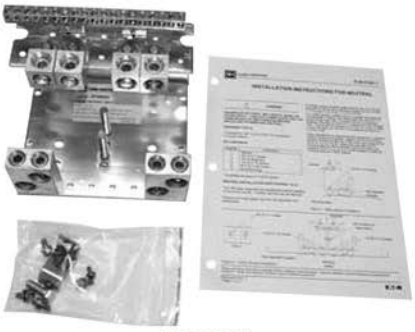

5PN800A

Table 48. Neutral Assemblies with Lugs

Incoming Number of Cables and Wire Size	Catalog Number
(4) 250 – 500 kcmil 800 Amperes Aluminum/Copper	5PN800A
(4) 250 – 500 kcmil 800 Amperes Copper	5PN800C
(4) 250 – 500 kcmil 1200 Amperes Aluminum/Copper	5PN1200A
(4) 250 – 500 kcmil 1200 Amperes Copper	5PN1200C

Table 49. Additional Lugs for Neutral Assemblies

Description	Catalog Number
(1) 1/0 – 750 kcmil or (2) 1/0 – 300 kcmil Aluminum/Copper	5PNL400
(2) 250 – 500 kcmil Aluminum/Copper	5PNL600
(3) 3/0 – 750 kcmil Aluminum/Copper	5PNL800
(4) 3/0 – 750 kcmil Aluminum/Copper	5PNL1200
Ground Bar Type	
1200 Amperes Aluminum/Copper	5PG1200A
1200 Amperes Copper	5PG1200C

Ground Bar Assemblies

5PG1200A

Table 50. Grounded "B" Phase Adapter Kits

Ampere Rating	Main Device	Catalog Number
Single Bus Chassis		
400	Main Lugs	5PCGBLUG400S
600	Main Lugs	5PCGBLUG600S
600	LD Breaker	5PCGBLD600S
800	Main Lugs	5PCGBLUG800S
Double Bus Chassis		
800	MD Breaker	5PCGBMD800T
1200	Main Lugs	5PCGBLUG1200T
1200	ND Breaker	5PCGBND1200T

PRL5P Box, Trim and Deadfront Filler Plates

Table 51. PRL5P Box, Trim and Deadfront Filler Plates

Chassis "X" Factor	Catalog Number		
	Back Box	Trim	Trim Door Kit
Single Bus Chassis — 30.00-Inch (762.0 mm) Wide Box			
24X	5PB2430G	5PT2430S	5PD24S
32X	5PB3230G	5PT3230S	5PD32S
40X	5PB4030G	5PT4030S	5PD40S
Double Bus Chassis — 48.00-Inch (1219.2 mm) Wide Box			
24X	5PB2448G	5PT2448S	5PD24T
32X	5PB3248G	5PT3248S	5PD32T
40X	5PB4048G	5PT4048S	5PD40T

Table 52. Deadfront Filler Plates

Vertical "X" Increment	Catalog Number	
	Single Bus Chassis ①	Double Bus Chassis
1X	5PFP1S	5PFP1T
2X	5PFP2S	5PFP2T
3X	5PFP3S	5PFP3T
4X	5PFP4S	5PFP4T
5X	5PFP5S	5PFP5T
6X	5PFP6S	5PFP6T

① These fillers are also used across from a breaker unit in a double bus chassis.

5PT2430S

5PD24S

5PFP3S

5PFP3T

PRL1a, 2a-LX

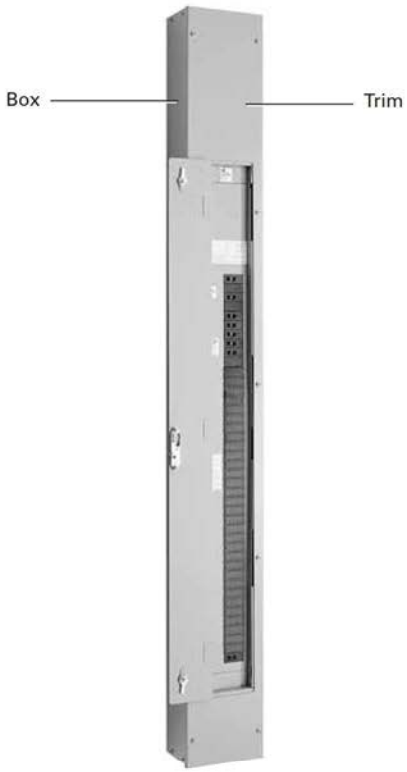

Table 53. Type 1 Box and Trims

Box Height in Inches (mm)	Catalog Number		
	Box	Surface Trim Standard	Surface Trim Door-In-Door
Incoming Location Top Fed			
69.00 (1752.6)	YSC969	LTC969S	LTCD969S
78.00 (1981.2)	YSC978	LTC978S	LTCD978S
81.00 (2057.4)	YSC981	LTC981S	LTCD981S
90.00 (2286.0)	YSC990	LTC990S	LTCD990S
Incoming Location Bottom Fed			
69.00 (1752.6)	YSC969	LTC969SB	LTCD969SB
78.00 (1981.2)	YSC978	LTC978SB	LTCD978SB
81.00 (2057.4)	YSC981	LTC981SB	LTCD981SB
90.00 (2286.0)	YSC990	LTC990SB	LTCD990SB

Pow-R-Command

For replacement parts, see PRL3a Section, **Page 21**. Parts available are the following:

- Connector kits.
- Ground assemblies.
- Service entrance kits.
- Deadfront covers.
- Trim locks.

Pow-R-Command

Additional Services

Since virtually all panelboards are supplied to meet specific customer requirements, other parts not listed in this publication might occasionally be needed. Price and availability for parts not shown here may be obtained by contacting your local Satellite plant and providing a complete description of the part along with the data on the panelboard nameplate.

Should you experience difficulty in determining what replacement parts are needed, contact your local Satellite Plant Manager who can provide help to:

- Identify and recommend replacement parts.
- Remove damaged parts and instruct you in how to install replacement parts.
- Verify the correct connector kits which should be ordered for each circuit breaker or fusible switch.
- Retrofit existing panelboard boxes with new Pow-R-Line interiors.
- Provide a recommended spare parts list.

National Electrical Code and NEC are registered trademarks of the National Fire Protection Association, Quincy, Mass. NEMA is the registered trademark and service mark of the National Electrical Manufacturers Association. UL is a federally registered trademark of Underwriters Laboratories Inc.

This page intentionally left blank.

Eaton Electrical
1000 Cherrington Parkway
Moon Township, PA 15108-4312
USA
tel: 1-800-525-2000
www.eatonelectrical.com

© 2009 Eaton Corporation
All Rights Reserved
Printed in USA
Publication No. RP01400001E/Z8339
February 2009

Dry Type Transformers

Drawings and Pictures

Dry-Type Transformers General Information

Custom Transformers must be approved by TRC - Avery Creek

This is a custom-manufactured product. Once it is released for manufacturing, it cannot be cancelled. This product cannot be returned for credit.

- Custom Transformer Style Number: V48M28T30EETRUS
- Transformer Type: General Purpose Vented
- Phase: 3
- kVA: 30
- Primary Volts: 480
- Secondary Volts: 208Y/120
- Temperature Rise: 150C with 220C Insulation System
- Winding Material: Aluminum
- Enclosure Type: NEMA 2 (N3R w/opt'l weathershield)
- Frequency (Hz): 60
- Easy Install: N
- Made In America: Y

Standard Values

- K-Factor: 1
- TAPS: 2@+2.5%, 4@-2.5%
- Sound Reduction (dB): 0
- NEMA ST20 Sound Level (dB): 45
- DOE 10 CFR Part 431 (2007) Efficient (NEMA TP-1): Y
- Infrared Viewing Window: None

Field-Installed Accessories Included

- Lug Kit: LKS1

Customized Values

- CUSTOM: Certified Test Report Y
- CUSTOM: Made In America Y
-
- CUSTOM: OSHPD Compliant (verify mounting method in OSP) N
-

The information on this document is created by Eaton. It is disclosed in confidence and it is only to be used for the purpose in which it is supplied.	PREPARED BY: SUSAN HINTON	DATE: 4/23/2015	**Eaton**		
	APPROVED BY	DATE	JOB NAME: CDOT - EJMT		
			DESIGNATION: DT-3, DT-3		
	VERSION: 1.0.0.1		TYPE: Dry-Type Transformer	DRAWING TYPE: Final	
NEG-ALT Number: DN800129X5K2-R000	REVISION: 0	DWG SIZE: A	G.O.: SDN0598403	ITEM: 004	SHEET: 1 of 1

Instruction Data

Instructions for Installation, Operation, and Maintenance of Dry-Type Distribution Transformers

Instrucciones para la instalación, operación y mantenimiento de los Transformadores de Distribución Tipo Seco

CONTENTS

Description

Section 1: Introduction 2
Section 2: Receiving 2
Section 3: Lifting and Handling 2
Section 4: Storage Prior to Energization 4
Section 5: Location and Mounting 4
Section 6: How to Reduce Sound Transmission 4
Section 7: Connecting Cables to Transformer Terminations 5
Section 8: Energization and Operation Guidelines 5
Section 9: Maintenance and Repair 6
Section 10: Safety 7
Section 11: Disclaimer of Warranties and Limitation of Liabilty 7

Figures

1. Typical Ventilated Transformer 3
2. Typical Encapsulated Transformer 3

Tables

1. NEMA Average Sound Level 4

CONTENIDO

Descripción

Sección 1: Introducción 2
Sección 2: Arrivo 2
Sección 3: Izado y manejo 2
Sección 4: Almacenaje previo a conexión 4
Sección 5: Localización y montaje 4
Sección 6: Como reducir la tranmisión de sonido 4
Sección 7: Conexión de cables a las terminales del transformador 5
Sección 8: Guía de energizado y operación 5
Sección 9: Mantenimiento y reparación 6
Sección 10: Seguridad 7
Sección 11: Límites en responsabilidad y garantía 7

Figuras

1. Transformador típico ventilado 3
2. Transformador típico encapsulado 3

Tablas

1. Nivel de sonido promedio de N.E.M.A 4

⚠ WARNING

ALWAYS TURN OFF THE POWER SUPPLYING THIS EQUIPMENT BEFORE WORKING INSIDE. FAILURE TO DO SO COULD RESULT IN SERIOUS PERSONAL INJURY, DEATH, OR PROPERTY DAMAGE.

1. INTRODUCTION

Transformers should be installed and serviced only by competent personnel familiar with good safety practices. These instructions are written for such personnel and are not intended as a substitute for adequate training and experience in the use of transformers. Refer to NEMA Standard ST-20 for more information on general application requirements.

2. RECEIVING

All dry-type distribution transformers are completely assembled and carefully tested at the factory before being shipped.

Upon receipt of the transformer:

- Inspect it for possible shipping damage.
- Check the bill of lading for possible shortages.

If shipping damage occurs, a claim should immediately be filed with the carrier. Notify the local sales office with the carrier's name and the extent of the damage.

3. LIFTING AND HANDLING

⚠ WARNING

FAILURE TO PROPERLY LIFT THE TRANSFORMER MAY CAUSE DAMAGE TO THE PRODUCT, OTHER PROPERTY, OR RESULT IN PERSONAL INJURY.

ALWAYS MOVE A VENTILATED DESIGN TRANSFORMER IN AN UPRIGHT POSITION ONLY. FAILURE TO DO SO COULD RESULT IN TRANSFORMER DAMAGE.

Ventilated design transformers:

- Use spreaders with lifting chains or slings connected to the holes located on both sides panels or remove the top cover to access the lifting holes on each end of the top of the core-coil assembly.

OR

- Lift the unit with a fork lift when a pallet is provided.
- For further information see Figure 1 on Page 3.

Encapsulated design transformers (above 2 kVA):

- Lift the transformer by its lifting brackets.

OR

- Lift the unit with a fork lift when a pallet is provided.
- For further information see Figure 2 on Page 3.

⚠ ADVERTENCIA

SIEMPRE DESENERGICE ESTE EQUIPO ANTES DE TRABAJAR EN ÉL. EL NO HACERLO PUEDE CAUSAR LESIONES PERSONALES SERIAS, MUERTE O DAÑOS A LA PROPIEDAD.

1. INTRODUCCION

Los transformadores deben ser instalados y mantenidos por personal calificado y conocedor de prácticas de seguridad. Estas instrucciones van dirigidas a ellos sin intención de sustituir la adecuada capacitación y experiencia en transformadores. Consulte el estándar N.E.M.A. (National Electrical Manufacturers Association E.U.A.) ST-20 para requisitos de aplicaciones generales.

2. ARRIVO

Todos los transformadores de distribución tipo seco son completamente ensamblados y cuidadosamente probados en la fábrica antes de ser enviados.

Al recibir el transformador:

- Inspeccione si se ocasionaron daños debido al transporte.
- Verifique las partes para posibles faltantes.

En caso de ocurrir daño por transporte, levante un reporte con el transportista. Avise a la oficina local de ventas, provea el nombre del transportista y el alcance del daño.

3. IZADO Y MANEJO

⚠ ADVERTENCIA

LEVANTAR Y/O MOVER EL TRANSFORMADOR INCORRECTAMENTE PUEDE AFECTARLO, CAUSAR DAÑOS A LA PROPIEDAD O LESIONES PERSONALES.

TRASLADE LAS UNIDADES VENTILADAS SIEMPRE EN POSICIÓN VERTICAL. EL NO HACERLO DAÑARÁ EL TRANSFORMADOR.

Transformadores de Diseño Ventilado:

- Para izar use travesaño con cadena por los orificios redondos ubicados en los páneles laterales o por dentro de la unidad en la parte superior del ensamble del núcleo (remueva la tapa superior).

o

- Use montacargas si el transformador está sobre una tarima.
- Para referencia vea la Figura 1 en la página 3.

Transformadores de Diseño Encapsulado (mayores de 2 kVA):

- Levante la unidad por las ménsulas.

o

- Levante la unidad con montacargas cuando se provea tarima.
- Para referencia, vea la Figura 2 en la página 3.

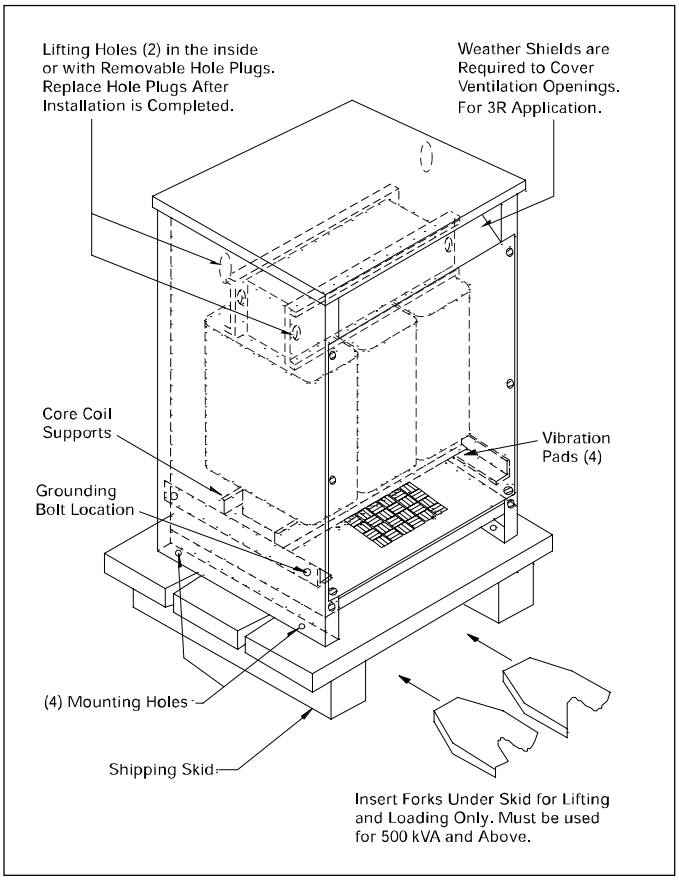

Figure 1 Typical Ventilated Transformer.

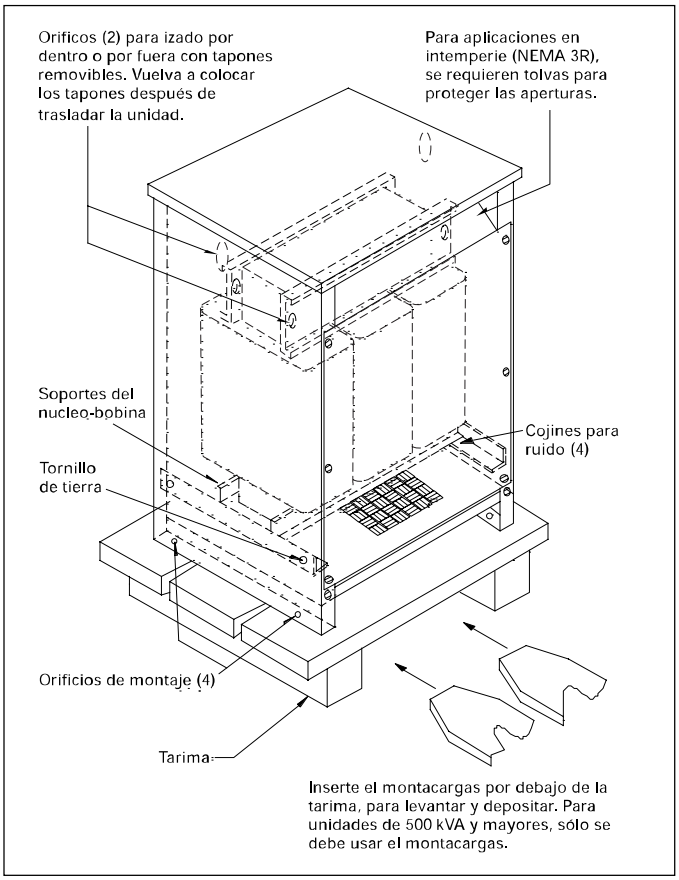

Figura 1 Transformador típico ventilado.

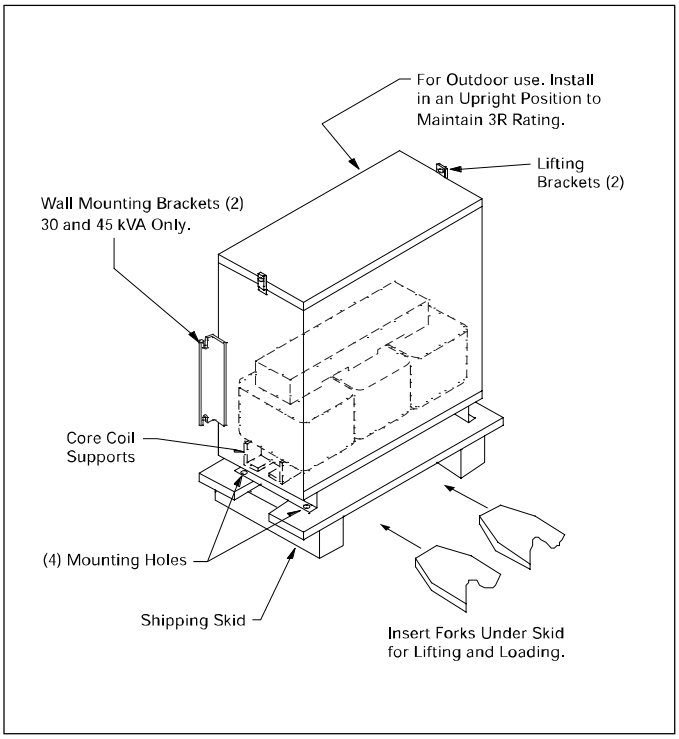

Figure 2 Typical Encapsulated Transformer.

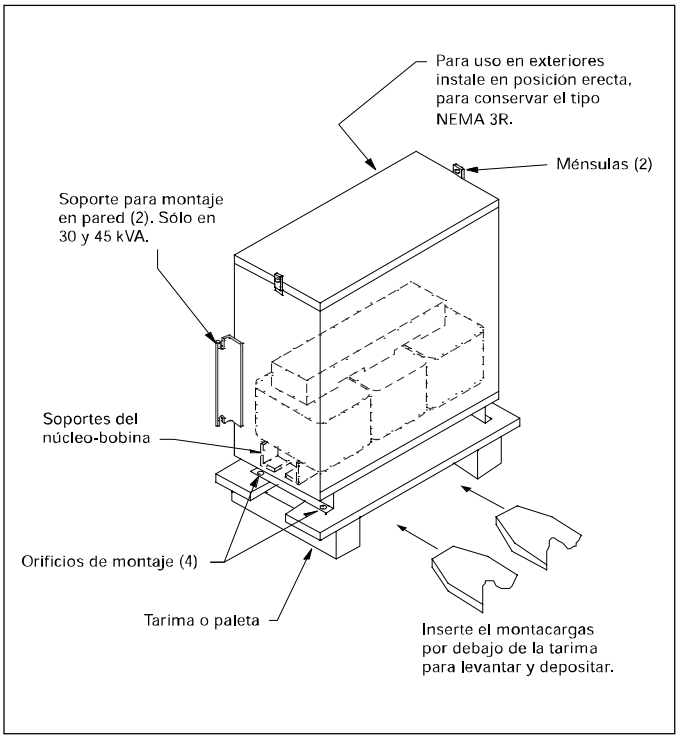

Figura 2 Transformador típico encapsulado.

4. STORAGE PRIOR TO ENERGIZATION

Store dry-type transformers in their original shipping cartons indoors in a clean, dry, temperature stable environment.

5. LOCATION AND MOUNTING

All dry-type transformers:

- Locate the transformer in an area where the transformer is easily accessible and serviceable.
- Install the unit in accordance with the requirements of Article 450 of the National Electrical Code and other appropriate local codes.
- Install the unit in a protected electrical circuit. Do not subject the transformer to voltage surges unless it is properly protected.
- Transformers are not tamper proof and should be installed in secured locations away from all unauthorized personnel.
- Locate unit in a well ventilated area free from excessive moisture, dust, dirt, or explosive/corrosive gases or vapors.
- Locate ventilated units at least 6 inches from front and rear structure to assure proper air circulation. Avoid any obstruction to the bottom and top panel ventilation openings.
- Install transformer on a surface strong enough to support the weight of the unit.
- Install ventilated transformers in an upright position only.
- Encapsulated transformers for indoor use may be mounted in any position. For outdoor application encapsulated transformers must be installed in an upright position to maintain a 3R rating.

6. HOW TO REDUCE SOUND TRANSMISSION

All transformers make some sound mainly due to the vibration generated in its core by alternating flux. NEMA ST-20 defines the sound levels for dry-type distribution transformers as shown in Table 1.

Table 1

kVA	*NEMA Average Sound Level (dB)①*	
	1.2 kV Class	*Above 1.2 kV*
0-9	40	45
10-50	45	50
51-150	50	55
151-300	55	58
301-500	60	60
501-700	62	62
701-1000	64	64
1001-1500	65	65

① Applies to general purpose transformers only.

4. ALMACENAJE PREVIO A CONEXION

Mantenga los transformadores en su empaque original, en interiores secos, limpios y a temperatura estable.

5. LOCALIZACION Y MONTAJE

Transformadores de Diseño Ventilado y Encapsulado:

- Coloque el transformador donde pueda ser inspeccionado y tener acceso a él en cualquier momento.
- Instale la unidad de acuerdo a lo provisto en el artículo 450 del N.E.C. (Código Nacional Eléctrico E.U.A.) y/o los códigos o normas locales aplicables.
- Instale la unidad en un circuito eléctrico protegido. No exponga el transformador a sobrevoltajes a menos que esté adecuadamente protegido.
- Los transformadores son fácilmente accesados y por ello deben ser instalados en lugares seguros, lejos de toda persona no autorizada.
- Ubique las unidades en un área ventilada, libre de humedad excesiva, polvo, suciedad o vapores o gases explosivos o corrosivos.
- Ubique el transformador ventilado retirado un mínimo de 15 cm. de estructuras frontal y posterior para asegurar la apropiada circulación de aire. Evite cualquier obstrucción a las aperturas de ventilación de los páneles superior e inferior.
- Instale el transformador sobre una superficie suficientemente rígida para soportar el peso de la unidad.
- Instale los transformadores ventilados en posición vertical sólamente.
- Los transformadores encapsulados para uso en interiores pueden ser montados en cualquier posición. Para uso en exteriores deben ser instalados sólo en posición vertical para mantener la nominación N.E.M.A. 3R.

6. COMO REDUCIR LA TRANSMISION DE SONIDO

Todos los transformadores generan sonido principalmente por la vibración generada en el núcleo por el flujo magnético alternante. NEMA ST-20 define los máximos niveles promedio de sonido para transformadores de distribución tipo seco como se muestra en la Tabla 1.

Tabla 1

kVA	*Nivel de sonido promedio de N.E.M.A. (dB)①*	
	Clase 1.2 kV	*Mayores de Clase 1.2 kV*
0-9	40	45
10-50	45	50
51-150	50	55
151-300	55	58
301-500	60	60
501-700	62	62
701-1000	64	64
1001-1500	65	65

① Aplica a transformadores de uso general solamente.

All general purpose dry-type distribution transformers are designed to meet NEMA ST-20 established sound levels. However, to minimize the potential for sound transmission to surrounding structures and sound reflection, follow these instructions:

1. Mount the transformer away from corners, walls or ceilings. For installation which must be near a corner, use sound absorbing materials on the walls and ceiling.
2. Use flexible conduit to make the connections to the transformers.
3. Locate the transformers as far away as possible from areas where sound is objectionable.

7. CONNECTING CABLES TO TRANSFORMER TERMINATIONS

Any standard cable of the conductor size specified in N.E.C. Section 310 can be used. Recommended external cable should be rated 90°C (sized at 75% ampacity) for encapsulated designs and 75°C for ventilated designs. Connectors should be selected on the basis of the type cable and cable size used to wire the specific transformer.

- Remove access panels to wiring compartment.
- Install conduit and wiring through sides and/or bottom of transformer case into wiring compartment.
- Top entry of cable should be avoided.
- Clean all electrical joints.
- Connect primary wiring first to correct terminal as shown on the transformer nameplate.
- Insulate any unused tap leads and verify tap connections are tight.
- Energize unit and measure secondary voltage to verify correct voltage.
- De-energize primary circuit and connect secondary wiring to terminations in accordance with nameplate wiring diagram.
- Make sure all connections are tight.
- Re-install access panels.

Grounding

As required by the National Electrical Code, connect a ground cable to the transformer enclosure. The transformer core is grounded to enclosure.

8. ENERGIZATION AND OPERATION GUIDELINES

For ventilated designs only, if moisture is evident, the unit should be dried out by placing it in an oven or by blowing heated air over it. The temperature should not exceed 110° C (230°F) to prevent damage to wiring insulation.

When the tests and connections are complete, the transformer may be energized.

Todos los transformadores de distribución tipo seco son diseñados para cumplir con los niveles de sonido establecidos por NEMA, norma ST-20. Aún así para minimizar la transmisión potencial de sonido y su reflexión, siga estas instrucciones:

1. Monte el transformador alejado de esquinas, paredes y techos. En caso contrario, use materiales absorbentes de sonido en las paredes
2. Use tubo conduit flexible para hacer las conexiones al transformador.
3. Coloque la unidad lo más retirada posible de áreas en las que el nivel de ruido sea un factor limitante.

7. CONEXION DE CABLES A LAS TERMINALES DEL TRANSFORMADOR

Puede usar cualquier cable conductor aislado, del calibre especificado por N.E.C. o los códigos aplicables. El cable de uso exterior recomendado debe ser para 90°C (calculado al 75% de ampacidad) en diseños encapsulados, y para 75°C en diseños ventilados. Los conectores deberán seleccionarse de acuerdo al tipo y al calibre del cable conductor utilizado en la conexión al transformador específico.

- Remueva los páneles o tapas de acceso al compartimiento de alambrado.
- Instale tubo conduit y el cableado por el fondo o los lados del gabinete del transformador hacia el compartimiento de terminales.
- Evite el acceso de cable por la parte superior del gabinete de diseños ventilados.
- Limpie todas las uniones eléctricas.
- Conecte primero la sección primaria a la terminal correcta, según se muestre en la placa de datos.
- Aisle todo tap (derivación) sin usar y revise que los taps conectados estén apretados.
- Energice la conexión primaria y mida el voltaje en la sección secundaria, verificando que sea el voltaje correcto.
- Desenergice y prepare la conexión en la sección secundaria de acuerdo al diagrama de la placa de datos.
- Asegúrese que todas las conexiones han sido apretadas.
- Reinstale los páneles o tapas de acceso al compartimiento de conductores.

Conexión a tierra (potencial cero)

Conecte el cable de tierra física al gabinete del transformador, así como lo requiere el N.E.C.. El núcleo del transformador ya ha sido aterrizado al gabinete.

8. GUIA DE ENERGIZADO Y OPERACION

Para diseños ventilados solamente: si existe humedad evidente, seque la unidad ya sea dentro de un horno o soplando aire caliente por ella. La temperatura no debe exceder 110°C (230°F) para prevenir daños al alambrado.

Una vez probado el transformador y terminadas las conexiones, el transformador puede ser energizado.

Do not make any connections other than those shown on the nameplate or diagram. Do not change connections or taps while the unit is energized.

This dry-type transformer was built and tested in accordance with applicable standards of American National Standards Institute and National Electrical Manufacturers's Association.

The following operations guides are excerpts from these standards.

⚠ WARNING

IT IS IMPORTANT TO FOLLOW THE GUIDELINES SET FORTH BELOW. FAILURE TO DO SO COULD RESULT IN SEVERE PERSONAL INJURY, DEATH, PROPERTY DAMAGE, OR REDUCED TRANSFORMER LIFE.

The maximum allowed overvoltage is 5% above rated secondary voltage at rated kVA load with load power factor at least 80%. If the transformer is energized while the secondary is not connected to a load, then the voltage applied to the primary must not result in a voltage exceeding 110% of the rated secondary voltage.

Continuous overload capability is not deliberately designed into general purpose transformers. For short term overload capability, See ANSI C57.96-01.250 for guidelines and limitations.

Transformers depend entirely on the surrounding air for adequate ventilation. The ambient should not exceed 40°C (104°F) and the average temperature of the air for any 24 hour period should not exceed 30°C (86°F). For operation at higher ambients, transformer loading should be reduced 0.6% of rated KVA for each degree above 30°C average ambient to a maximum of 50°C (122°F).

The transformer may be connected in parallel with other transformers if the phase angle shift is the same; phase rotation is the same; transformers' turn ratios and voltage ratings are within a 0.5% range; and the percent impedance on the same kVA base is within a ±7.5% range.

Transformers are normally designed for operation at altitudes below 1000 meters (3300 feet). To operate a transformer above 1000 meters, it is necessary to reduce the kVA load and to increase the electrical insulation clearances between energized terminals. Refer to NEMA ST-20 for detailed guidelines.

9. MAINTENANCE AND REPAIR

⚠ WARNING

BEFORE ATTEMPTING REPAIRS, FOLLOW THE INSTRUCTIONS SET FORTH BELOW. DE-ENERGIZE THE TRANSFORMER BEFORE MAKING REPAIRS. FAILURE TO DO SO COULD RESULT IN SEVERE PERSONAL INJURY, DEATH, OR PROPERTY DAMAGE.

It is the responsibility of the owner to inspect, maintain and keep the transformer in good repair.

Report all failures during the warranty period to your local sales office prior to repairs. All warranty repairs must be made or approved by the manufacturer.

No intente realizar conexiones no mostradas en la placa de datos. No intente modificaciones o cambio de derivaciones (taps) con el transformador energizado.

Este transformador tipo seco fué construído y probado de acuerdo a normas aplicables A.N.S.I. (American National Standards Institute, E.U.A.)

Las siguientes instrucciones de operación son extractos de esas normas.

⚠ ADVERTENCIA

ES IMPORTANTE SEGUIR LAS RECOMENDACIONES QUE SE MENCIONAN. EL NO ACATARLAS PUEDE RESULTAR EN LESIONES PERSONALES SEVERAS, MUERTE, DAÑO EN PROPIEDAD O REDUCCIÓN DE LA VIDA ÚTIL DEL TRANSFORMADOR.

El máximo sobrevoltaje permitido es 5% sobre el voltaje nominal secundario, a carga (kVA) nominal, con un factor de potencia de al menos 80%. Si el transformador se energiza sin que el secundario esté conectado a una carga, entonces el voltaje aplicado al primario no debe provocar un voltaje secundario mayor al 110% del nominal.

Los transformadores de uso general no están intencionalmente diseñados para soportar sobrecargas contínuas. Para información y orientación sobre la operación de sobrecarga en periodos cortos de tiempo, consulte A.N.S.I. C57.96-01.250.

Los transformadores ventilados dependen completamente del aire circundante para su adecuada ventilación. El ambiente no debe exceder los 40°C (104°F) y el promedio de temperatura del aire, en un periodo de 24 horas, no debe exceder los 30°C (86°F). Para operación a mayores temperaturas, la carga del transformador se reduce un 0.6% de la potencia nominal en KVA por cada grado sobre 30°C (86°F) de ambiente promedio, hasta un máximo de 50°C (122°F).

El transformador puede conectarse en paralelo con otros transformadores si: el ángulo de fase es el mismo, la rotación de fase es igual, la relación de vueltas y los voltajes nominales están dentro de un 0.5% del rango, y el porcentaje de impedancia, basado en mismos KVA, está dentro del rango de ± 7.5%.

Los transformadores normalmente se diseñan para operar a altitudes por debajo de 1000 metros (3300 Ft.). Operando sobre 1000m es necesario reducir la carga en KVA e incrementar los claros entre terminales energizadas. Consulte N.E.M.A. ST-20 para más detalles.

9. MANTENIMIENTO Y REPARACION

⚠ ADVERTENCIA

ANTES DE INTENTAR DAR SERVICIO, SIGA LAS INSTRUCCIONES QUE SE DARÁN. DESENERGICE ESTE EQUIPO ANTES DE TRABAJAR EN ÉL. EL NO HACERLO PUEDE CAUSAR LESIONES PERSONALES SEVERAS, MUERTE O DAÑOS EN PROPIEDAD.

Es responsabilidad del propietario la inspección, mantenimiento y reparación del transformador.

Durante la vigencia de la garantía notifique toda falla a su oficina de ventas antes de reparar. Toda reparación bajo garantía debe ser hecha o aprobada por el fabricante.

Practically no maintenance is required on a dry-type transformer but inspect it periodically as indicated below:

- De-energize transformer.
- Check for any accumulation of dust or dirt on the terminations or vents. If necessary, remove by vacuuming, brushing, or blowing dry air. Special care should be taken when blowing with dry air to prevent further damage to the product or injury to maintenance personnel from flying particles.
- Inspect insulators, terminals, terminal boards, for tracking (discharge), breaks, cracks, or burns. Clean or repair if necessary.
- Check terminal quality and connections, including taps, for tightness. Replace or tighten as necessary.
- Inspect ground connections and ground contact surfaces. Tighten or repair if needed.
- For ventilated designs only, if moisture is evident, the unit should be dried out by placing it in an oven or by blowing heated air over it. The temperature should not exceed 110°C (230°F) to prevent damage to installation wiring.
- Inspect the paint finish for scratches or wear. Repair the finish if necessary.

10. SAFETY

The installation, operation and maintenance of a transformer presents numerous potential unsafe conditions, including, but not limited to the following:

- Improper tap changing operation
- Lethal voltages
- Moving machinery
- Heavy components

All applicable safety procedures as OSHA requirements, regional and local safety requirements, safe working practices, and good judgement must be used by personnel when installing, operating, and/or maintaining such equipment.

Unless otherwise stated, failure to adhere to the following could result in severe bodily damage, injury, death, or property damage. Refer to appropriate areas of this instruction book for further instructions.

1. When the transformer is energized, the electrical terminations are at high voltages. Close exposure to these parts could result in death by electrocution.
2. Do not remove case panels and/or doors when the transformer is energized. Do not energize transformer for operation until the panels are properly installed.
3. Improper or inadequate maintenance could result in reduced transformer life, cause personal injury, death, or property damage.

11. DISCLAIMER OF WARRANTIES AND LIMITATION OF LIABILITY

There are no understandings, agreements, representations or warranties, express or implied, including warranties of merchantability

El transformador tipo seco prácticamente no necesita mantenimiento; aún así, acostumbre revisarlo de la manera siguiente:

- Desenergice el transformador.
- Busque polvo y suciedad acumulados en terminales y respiraderos. De ser necesario, remueva con aspiradora, cepillando o soplando aire seco. Se debe tener cuidado especial al soplar aire seco para prevenir posibles daños al producto o al personal con las partículas sueltas.
- Revise quebraduras, quemaduras y fisuras en aislantes, terminales y soportes de terminales. Limpie o repare si es necesario.
- Revise la calidad y firmeza de terminales y contactos, incluyendo los taps. Apriete o reemplace si es necesario.
- Revise conexiones y superficies de contacto a tierra (potencial cero). Limpie, apriete o repare si es necesario.
- Para diseños ventilados solamente, en caso de humedad evidente, la unidad debe ser secada ya sea dentro de un horno o soplando aire caliente. La temperatura no debe exceder 110°C (230° F) para prevenir daño al alambrado.
- Inspeccione raspaduras o deterioro en el acabado de la pintura exterior del gabinete. Retoque de ser necesario.

10. SEGURIDAD

La instalación, operación y mantenimiento de un transformador presenta numerosas condiciones inseguras, incluyendo entre otras:

- Modificar arreglo de derivaciones (taps) inapropiadamente
- Voltajes mortales
- Equipo en movimiento
- Partes y componentes pesados

Todos los procedimientos de seguridad como los requeridos por O.S.H.A. (Occupational Safety & Health Administration, E.U.A.), instituciones como C.F.E., I.M.S.S. y S.T.P.S. (MEX) u otros aplicables, requerimientos locales y regionales deben ser usados por el personal para instalar y/o dar mantenimiento al equipo, así como también seguir prácticas de seguridad y buen juicio.

A menos que se especifique lo contrario, el no apegarse a lo siguiente puede causar daños y lesiones personales, muerte y daños en propiedad. Vea las secciones apropiadas de este manual para más información.

1. Cuando el transformador está energizado las terminales eléctricas mantienen un alto potencial (voltaje). El exponerse a estas partes puede causar muerte por electrocución.
2. No remueva los páneles o tapas cuando el transformador esté energizado. No energice el transformador sin haber reinstalado dichos elementos.
3. El mantenimiento pobre o inapropiado reduce la vida útil de la unidad, puede causar lesiones personales, muerte o daño a la propiedad.

11. LIMITES EN RESPONSABILIDAD Y GARANTIA

No hay entendimientos, acuerdos, representaciones o garantías, expresas o implícitas, incluyendo garantías de mercadeo o

or fitness for a particular purpose, other than those specifically set out by any existing contract between the parties. Any such contract states the entire obligation of seller, the contents of this document shall not become part of or modify any prior or existing agreement, commitment or relationship.

The information, recommendations, descriptions and safety notations in this document are based on industry experience and judgement with respect to transformers. This information should not be considered to be all inclusive or covering all contingencies. If further information is required the local sales office should be consulted. No warranties express or implied, including warranties of fitness for a particular purpose or merchantability, or warranties arising from course of dealing or usage of trade, are made regarding the information, recommendations, descriptions, and safety notations contained herein. In no event will the manufacturer be responsible to the user in contract, in tort (including negligence), strict liability or otherwise for any special, indirect, incidental or consequential damage or loss whatsoever, including but not limited to damage or loss of use of equipment, plant or power system, cost of capital, loss of profits, or revenues, cost of replacement power, additional expenses in the use of existing power facilities, or claims against the user by its customers resulting from the use of the information, recommendations, descriptions and safety notations contained herein.

adecuación a un propósito particular, mas que aquellas estipuladas en un contrato existente entre las partes. Tal contrato establece toda la obligación del vendedor. El contenido de este instructivo no será parte ni modificará cualquier acuerdo, compromiso o relación previa o existente.

La información, recomendaciones, descripciones y notas de seguridad se basan en la experiencia y el juicio del fabricante en la industria de transformadores. Este instructivo no cubre ni incluye todas las contingencias posibles. Si requiere más información consulte la oficina local de ventas. Ninguna garantía, expresa o implícita, incluyendo garantías de adecuación a un propósito particular o mercadeo, o garantías surgidas de negociaciones o tratos comerciales, se hace concerniente a la información, recomendaciones descripciones y notas de seguridad contenidas aquí. En ningún caso el fabricante será responsable ante el usuario en contrato, por agravio, responsabilidad a terceros o de otra forma, por ningún daño o pérdida especial, indirecta, incidental o consecuente, incluyendo pero no limitado a daño o pérdida en el uso de equipo, sistemas de planta o potencia, costo de capital, pérdida de utilidades o ingresos, costo de reemplazo de potencia, gastos adicionales en el uso de instalaciones de potencia existentes, o reclamos contra el usuario de parte de sus clientes por el uso de la información, recomendaciones, descripciones y notas de seguridad contenidas aquí.

Publication No. I.L. P24836G-591H
November 1999
Printed in Mexico / Z99100

Publicación No. I.L. P24836G-591H
Noviembre 1999
Impreso en México / Z99100

Safety Switches

Drawings and Pictures

Safety Switch General Information

Global Specifications

System Voltage	600 VAC
Switch Type	Single Throw - Heavy Duty
Poles/Blades	3-Pole
Amperage	200
Protection	Fusible with No Neutral
Enclosure Type	NEMA 1
Fuse Clips	Standard
Switch Lugs	Standard
Fungus Proof Treatment	N
Lock-On Provision	N
Fuse Pullers	N
Control Pole	N
Ground Lugs	N
316 Stainless	N
Stainless Mechanism	N
Mill Duty	N

Nameplate

Field Installed Kits

QUANTITY	DESCRIPTION
1	"R" Fuse Adapter Kit : DS46FK (Field Installed)

Safety Switch Catalog No.

DH364FGK

The information on this document is created by Eaton Corporation. It is disclosed in confidence and it is only to be used for the purpose in which it is supplied.	PREPARED BY: SUSAN HINTON	DATE: 4/23/2015	Eaton		
	APPROVED BY:	DATE:	JOB NAME: CDOT - EJMT DESIGNATION: 200A/3P/F/N1		
	VERSION: 1.0.0.1		TYPE: Safety Switch General Information	DRAWING TYPE: Final	
NEG-ALT Number: DN800129X5K2-R000	REVISION: 0	DWG SIZE: A	G.O.: SDN0598403	ITEM: 006	SHEET: 1 of 1

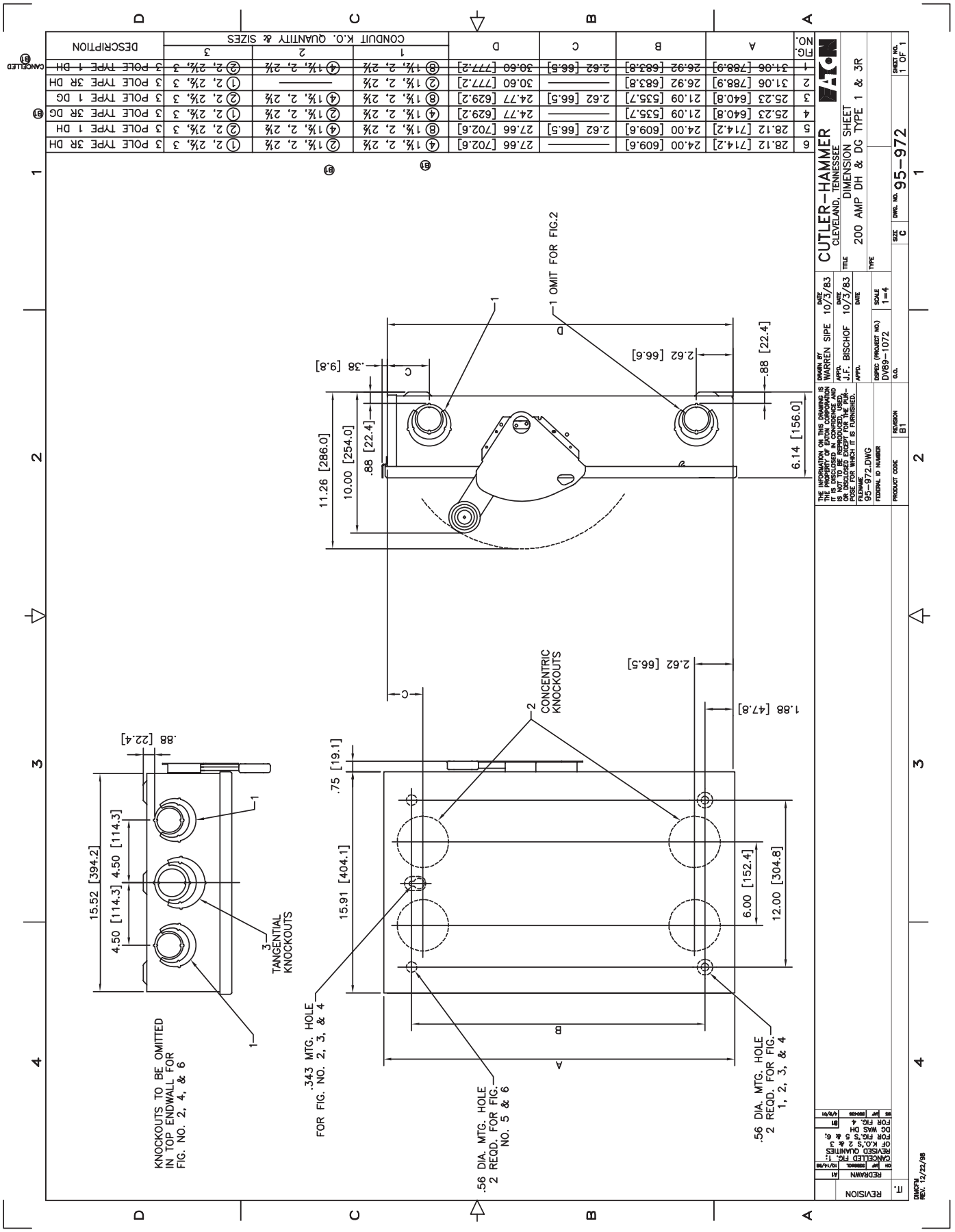

NO.	A	B	C	D	CONDUIT K.O. QUANTITY & SIZES 1	2	3	DESCRIPTION
1	31.06 [788.9]	26.92 [683.8]	2.62 [66.5]	30.60 [777.2]	⑧ 1¼, 2, 2½	④ 1¼, 2, 2½	② 2, 2½, 3	3 POLE TYPE 1 DH
2	31.06 [788.9]	26.92 [683.8]	———	30.60 [777.2]	② 1¼, 2, 2½	———	① 2, 2½, 3	3 POLE TYPE 3R DH
3	25.23 [640.8]	21.09 [535.7]	2.62 [66.5]	24.77 [629.2]	⑧ 1¼, 2, 2½	④ 1¼, 2, 2½	② 2, 2½, 3	3 POLE TYPE 1 DG
4	25.23 [640.8]	21.09 [535.7]	———	24.77 [629.2]	④ 1¼, 2, 2½	② 1¼, 2, 2½	① 2, 2½, 3	3 POLE TYPE 3R DG
5	28.12 [714.2]	24.00 [609.6]	2.62 [66.5]	27.66 [702.6]	⑧ 1¼, 2, 2½	④ 1¼, 2, 2½	② 2, 2½, 3	3 POLE TYPE 1 DH
6	28.12 [714.2]	24.00 [609.6]	———	27.66 [702.6]	④ 1¼, 2, 2½	② 1¼, 2, 2½	① 2, 2½, 3	3 POLE TYPE 3R DH

GO/NEG-Alt-Date: SDN0598403-R000-4/23/2015	Job Name: CDOT - EJMT
Item Number: 006 / Catalog Number: DH364FGK	Designation: 200A/3P/F/N1

Safety Switch General Information

Global Specifications

System Voltage	600 VAC
Switch Type	Single Throw - Heavy Duty
Poles/Blades	3-Pole
Amperage	30
Protection	Fusible with No Neutral
Enclosure Type	NEMA 1
Fuse Clips	Standard
Switch Lugs	Standard
Fungus Proof Treatment	N
Lock-On Provision	N
Fuse Pullers	N
Control Pole	N
Ground Lugs	N
316 Stainless	N
Stainless Mechanism	N
Mill Duty	N

Nameplate

Field Installed Kits

QUANTITY	DESCRIPTION
1	"R" Fuse Adapter Kit : DS16FK (Field Installed)

Safety Switch Catalog No.

DH361FGK

The information on this document is created by Eaton Corporation. It is disclosed in confidence and it is only to be used for the purpose in which it is supplied.	PREPARED BY: SUSAN HINTON	DATE: 4/23/2015	Eaton		
	APPROVED BY:	DATE:	JOB NAME: CDOT - EJMT		
			DESIGNATION: 30A/3P/F/N1		
	VERSION: 1.0.0.1		TYPE: Safety Switch General Information	DRAWING TYPE: Final	
NEG-ALT Number: DN800129X5K2-R000	REVISION: 0	DWG SIZE: A	G.O.: SDN0598403	ITEM: 008	SHEET: 1 of 1

GO/NEG-Alt-Date:	Job Name:
SDN0598403-R000-4/23/2015	CDOT - EJMT
Item Number: 008	**Catalog Number:** DH361FGK
	Designation: 30A/3P/F/N1

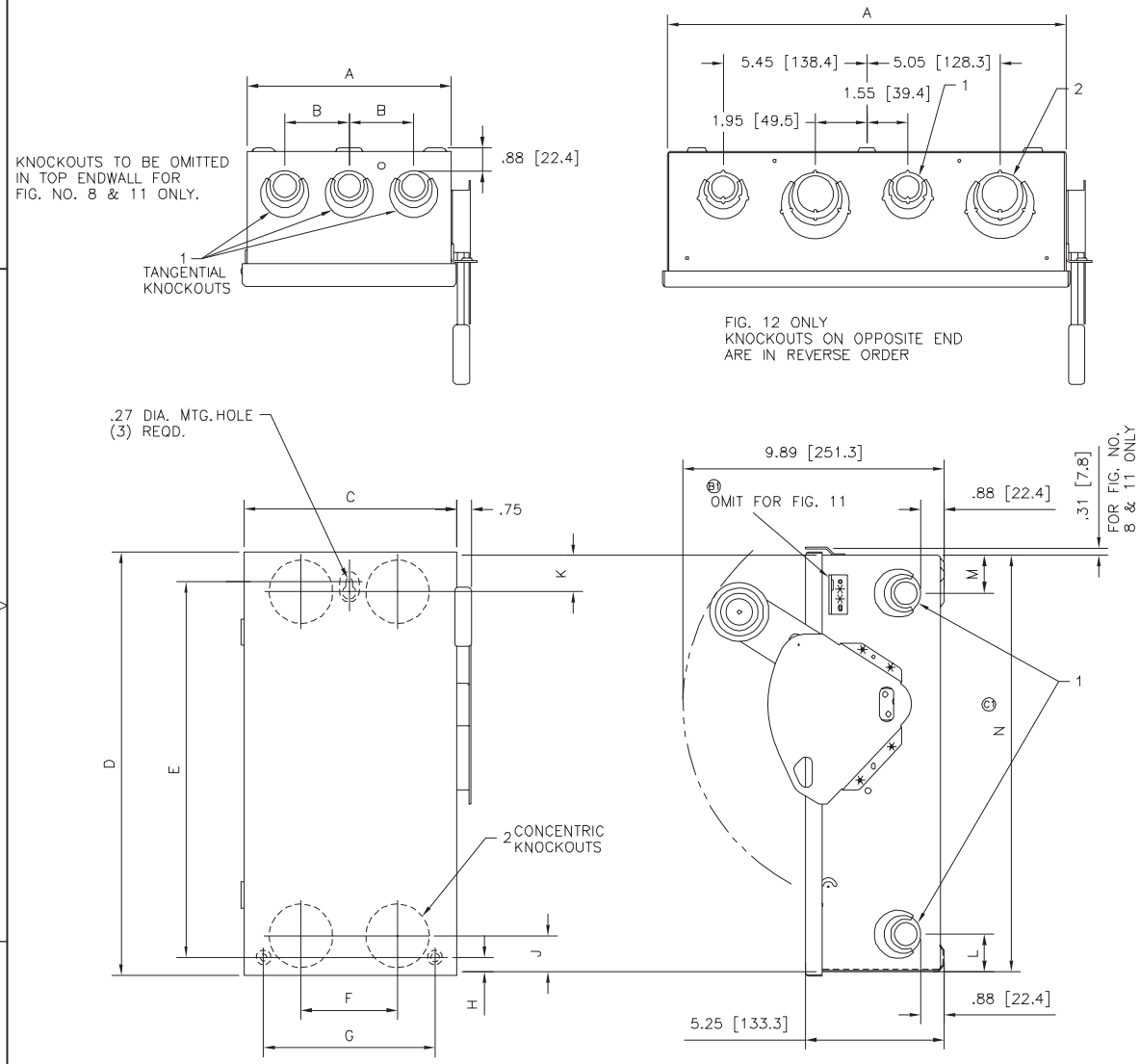

FIG. NO.	A	B	C	D	E	F	G	H	J	K	L	M	N	1 CONDUIT K.O. QTY. & SIZES	2 CONDUIT K.O. QTY. & SIZES	DESCRIPTION
12	15.12 [384.0]	—	15.43 [391.9]	21.99 [558.5]	20.00 [508]	—	12.75 [323.9]	.74 [18.8]	—	—	—	—	21.68 [550.7]	④ 3/4-1-1 1/4	④ 1/2-3/4-1-1 1/4	100 AMP 4 POLE TYPE 1
11	7.75 [196.9]	2.44 [62.0]	8.12 [206.2]	16.27 [413.3]	14.25 [362.0]	3.66 [93.0]	6.50 [165.1]	.56 [14.2]	1.38 [35.1]	—	1.44 [36.6]	—	15.81 [401.6]	⑤ 3/4-1-1 1/4	② 1/2-3/4-1-1 1/4	30 & 60 AMP 3 POLE TYPE 3R
10	7.75 [196.9]	2.44 [62.0]	8.06 [204.7]	16.00 [406.4]	14.25 [362.0]	3.66 [93.0]	6.50 [165.1]	.56 [14.2]	1.38 [35.1]	1.38 [35.1]	1.44 [36.6]	1.44 [36.6]	15.81 [401.6]	⑩ 3/4-1-1 1/4	④ 1/2-3/4-1-1 1/4	30 & 60 AMP 3 POLE TYPE 1
8	10.78 [273.8]	3.50 [88.9]	11.09 [281.7]	21.99 [558.5]	20.00 [508]	4.50 [114.3]	9.50 [241.3]	.74 [18.8]	1.88 [47.8]	—	1.88 [47.8]	—	21.68 [550.7]	⑤ 1 1/4-1 1/2-2	② 1 1/4-1 1/2-2	100 AMP 3 POLE TYPE 3R
7	10.78 [273.8]	3.50 [88.9]	11.09 [281.7]	21.99 [558.5]	20.00 [508]	4.50 [114.3]	9.50 [241.3]	.74 [18.8]	1.88 [47.8]	1.88 [47.8]	1.88 [47.8]	1.88 [47.8]	21.68 [550.7]	⑩ 1 1/4-1 1/2-2	④ 1 1/4-1 1/2-2	100 AMP 3 POLE TYPE 1
3	11.87 [310.5]	2.38 [60.5]	12.18 [309.4]	16.00 [406.4]	13.75 [349.3]	—	10.00 254	1.06 [26.9]	—	—	—	—	15.81 [401.6]	② 1/2-3/4-1	—	30 & 60 AMP 4 POLE TYPE 1

IT.	REVISION	1
	REDRAWN	A1
	CH JAT 15466MO.	10/13/98
	ADDED "OMIT FOR FIG. 11"	B1
	WS RP DS9589	5/17/02
	CORRECTED "N" DIMENSION LOCATION	C1
	WS RP DS1314	6/12/08

THE INFORMATION ON THIS DRAWING IS THE PROPERTY OF EATON CORPORATION IT IS DISCLOSED IN CONFIDENCE AND IS NOT TO BE REPRODUCED, USED, OR DISCLOSED EXCEPT FOR THE PURPOSE FOR WHICH IT IS FURNISHED.

FILENAME: 95-955.DWG
FEDERAL ID NUMBER
PRODUCT CODE: BD90 | REVISION: C1

DFTR. EDDIE CARSON DATE 10/5/82
APPD. J. BISCHOF DATE 10/5/82
APPD. DATE
DSPEC (PROJECT NO.) DV89-1069 | SCALE 1=3
G.O.

CUTLER-HAMMER
CLEVELAND, TENNESSEE
EATON
TITLE DIMENSION SHEET 30, 60, &100 AMP TYPE 1 & 3 3P & 4P
TYPE
SIZE C | DWG. NO. 95-955 | SHEET NO. 1 OF 1

DIMCFM REV. 5/15/98

Instruction Data

NEMA KS 3

GUIDELINES FOR INSPECTION AND PREVENTIVE MAINTENANCE OF SWITCHES USED IN COMMERCIAL AND INDUSTRIAL APPLICATIONS

NEMA Standards Publication KS 3-2010

Guidelines for Inspection and Preventive Maintenance of Switches Used in Commercial and Industrial Applications

Published by:

National Electrical Manufacturers Association
1300 North 17th Street, Suite 1752
Rosslyn, Virginia 22209

www.nema.org

© Copyright 2010 by the National Electrical Manufacturers Association. All rights including translation into other languages, reserved under the Universal Copyright Convention, the Berne Convention for the Protection of Literary and Artistic Works, and the International and Pan American Copyright Conventions.

NOTICE AND DISCLAIMER

The information in this publication was considered technically sound by the consensus of persons engaged in the development and approval of the document at the time it was developed. Consensus does not necessarily mean that there is unanimous agreement among every person participating in the development of this document.

The National Electrical Manufacturers Association (NEMA) standards and guideline publications, of which the document contained herein is one, are developed through a voluntary consensus standards development process. This process brings together volunteers and/or seeks out the views of persons who have an interest in the topic covered by this publication. While NEMA administers the process and establishes rules to promote fairness in the development of consensus, it does not write the document and it does not independently test, evaluate, or verify the accuracy or completeness of any information or the soundness of any judgments contained in its standards and guideline publications.

NEMA disclaims liability for any personal injury, property, or other damages of any nature whatsoever, whether special, indirect, consequential, or compensatory, directly or indirectly resulting from the publication, use of, application, or reliance on this document. NEMA disclaims and makes no guaranty or warranty, expressed or implied, as to the accuracy or completeness of any information published herein, and disclaims and makes no warranty that the information in this document will fulfill any of your particular purposes or needs. NEMA does not undertake to guarantee the performance of any individual manufacturer or seller's products or services by virtue of this standard or guide.

In publishing and making this document available, NEMA is not undertaking to render professional or other services for or on behalf of any person or entity, nor is NEMA undertaking to perform any duty owed by any person or entity to someone else. Anyone using this document should rely on his or her own independent judgment or, as appropriate, seek the advice of a competent professional in determining the exercise of reasonable care in any given circumstances. Information and other standards on the topic covered by this publication may be available from other sources, which the user may wish to consult for additional views or information not covered by this publication.

NEMA has no power, nor does it undertake to police or enforce compliance with the contents of this document. NEMA does not certify, test, or inspect products, designs, or installations for safety or health purposes. Any certification or other statement of compliance with any health or safety–related information in this document shall not be attributable to NEMA and is solely the responsibility of the certifier or maker of the statement.

CONTENTS

Foreword ii
Introduction iii

SECTION 1 GENERAL 1

1.1 Scope 1
1.2 Referenced Standards 1

SECTION 2 SAFETY PROCEDURES 3

2.1 Warning 3
2.2 Safety Procedure 3
2.3 Reinstallation Safety Procedure 3

SECTION 3 GUIDELINES 5

3.1 To Avoid Damaged or Otherwise Inoperable Switches Being Inadvertently Returned to Service 5
3.2 Guidance Regarding Inspection and Preventive Maintenance Procedures 5
3.3 For Information Regarding Switch Performance and Application 5
3.4 Water-Damaged Switches 5
3.5 Switch Inspection Once Each Year 5

SECTION 4 INSPECTION PROCEDURES 6

4.1 General 6
4.2 Exposed Surfaces Temperature Check 6
4.3 Inspection of Enclosure Interior 6

SECTION 5 PREVENTIVE MAINTENANCE 9

5.1 General 9
5.2 Environmental Evaluation 9
5.3 Fuse Provisions 10
5.4 Wire Connectors 10
5.5 Reinstallation Procedure 10

SECTION 6 TEST PROCEDURES 11

6.1 General 11
6.2 Mechanical Operation Test 11
6.3 Insulation Resistance Test 12
6.4 Individual Pole Resistance Test (Millivolt Drop) 13

SECTION 7 ACCESSORY DEVICE TEST PROCEDURES 17

7.1 General 17
7.2 Shunt Trip Release Tests 17
7.3 Electrical Operator Tests 18
7.4 Auxiliary Switch Tests 20

Figure 1 Pitting 7
Figure 2 Heat Damage 7
Figure 3 Typical Insulation Resistance Test Set-Up 12
Figure 4 Individual Pole Resistance Test Set-Up 14
Figure 5 Fused Switch Individual Pole Resistance Test Set-Up 14
Figure 6 Non-Fused Switch Individual Pole Resistance Test Set-Up 15
Figure 7 Sample Shunt Trip Release 17
Figure 8 Sample Electrical Operator / Switch Assembly 18
Figure 9 Sample Auxiliary Switch 20

© Copyright 2010 by the National Electrical Manufacturers Association.

Foreword

This is the first edition of NEMA Standards Publication KS 3. To ensure that a meaningful publication was developed, draft copies were sent to a number of individuals and organizations in the public sector having an interest in or responsibility for the purchase, testing, application, use, and preventive maintenance of these products. Their resulting comments and suggestions provided a vital user and general interest input prior to final NEMA approval and resulted in a number of substantive changes to this publication. This publication will be periodically reviewed by the Switches Voting Classification of NEMA for any revisions necessary to keep it up to date with advancing technology. Proposed or recommended revisions should be submitted to:

Vice President, Technical Services
National Electrical Manufacturers Association
1300 North 17th Street
Rosslyn, Virginia 22209

This Standards Publication was developed by the Switches Voting Classification of the National Electrical Manufacturers Association. Approval of this standard does not necessarily imply that all voting classification members voted for its approval or participated in its development. At the time it was approved, the Switches Voting Classification had the following members:

ABB Control, Inc.—Wichita Falls, TX
Boltswitch, Inc.—Crystal Lake, IL
Cooper Bussmann—St. Louis, MO
Eaton Corporation—Pittsburgh, PA
GE Industrial Solutions—Plainville, CT
Hubbell Inc.—Bridgeport, CT
Mersen USA—Newburyport, MA
Siemens Industry, Inc.—Alpharetta, GA
Schneider Electric—Palatine, IL

© Copyright 2010 by the National Electrical Manufacturers Association.

Introduction

NEMA KS 3 deals with guidelines for inspection and preventive maintenance of switches used in commercial and industrial applications. These guidelines are to be used to identify switches requiring maintenance or replacement. Good practice includes periodic switch maintenance during plant shutdown or during a regular maintenance period as specified, for example, in NFPA 70B. When a switch operates automatically, good practice dictates that the source of the overcurrent should be located, and if it is suspected that the operation was at or near the interrupting rating, the switch condition should be checked prior to circuit re-energization.

When appropriately maintained, switches provide reliable protection for many years. The exact lifetime of the switch, however, is determined by the switch's operational duty and by its environment.

With respect to operational duty, for some circuits there will be occasional overload conditions or low-current fault conditions. Here the operating life will be tens of years. In other circuits, there may be high short-circuit-current faults but it should be noted that bolted faults at the switch interrupting rating are rarely encountered. Short circuit events can significantly reduce the operating life of the switch and may necessitate replacement of the switch. Switches in this Guideline are evaluated to three different UL Standards: UL 98 *Enclosed and Dead-Front Switches*, UL 977 *Fused Power-Circuit Devices*, and UL 1429 *Pullout Switches*. They are subjected to thousands of endurance test operations; overload test operations; and two interrupting tests at maximum short-circuit-current rating. Thus switches have an extensive but finite interrupting capability, and switches that experience multiple high short-circuit-current faults should receive a thorough inspection and be replaced if necessary.

With respect to environmental effects, switches are sometimes exposed to high ambient temperatures, high humidity, and other ambient conditions that are hostile to long term performance. For example, industries may have corrosive environments or could be associated with dusty environments that could affect operating parts.

It is not intended that switches be disassembled for inspection. Rather, NEMA KS 3 should be referenced during periodic maintenance or during specific inspection following a high short-circuit-current fault. This document is intended to ensure that switches are well maintained, and provides guidelines for switch replacement.

This document is divided into separate sections as follows:

Section 1 presents the scope and referenced standards.

Section 2 details the safety procedures to be followed.

Section 3 deals with general guidance.

Section 4 deals with inspection procedures and describes thermal checks (4.2) and visual checks (4.3) of the enclosure and switch condition. Overheating of the switch would necessitate further investigation, and cracks in the insulation systems would certainly necessitate switch replacement.

Section 5 deals with preventive maintenance and ensures that the switch's life is not compromised by external conditions. The objectives are that the switch operates in a clean environment and that the terminals are in good condition (5.2), that fuses (if required) are connected properly (5.3), and that wire connectors are in good condition and are correctly torqued (5.4).

Section 6 deals with non-destructive test procedures that can be used to verify specific operating characteristics of switches. These include the Mechanical Operation Test (6.2), the Insulation Resistance Test (6.3), and the Individual Pole Resistance Test (millivolt drop test) (6.4). Non-compliance to one or more of these tests could necessitate switch replacement.

© Copyright 2010 by the National Electrical Manufacturers Association.

Section 7 deals with the operation of accessory devices. Failure of an accessory would lead to replacement of that accessory, or switch replacement if accessories are not removable.

In summary, following an automatic overcurrent interruption at or near its interrupting rating, the condition of any protective device should be checked prior to circuit re-energization. Switches that have experienced multiple high short-circuit-current faults, as evidenced by conditions at the source of the faults, should receive a thorough inspection per the guidelines of NEMA KS 3. This document should also be used for recommended, periodic, preventive maintenance.

© Copyright 2010 by the National Electrical Manufacturers Association.

Section 1
GENERAL

1.1 Scope

NEMA Standards Publication KS 3 sets forth, for use by qualified personnel[1], a number of basic procedures that may be used for the inspection and preventive maintenance of switches used in industrial and commercial applications rated up to and including 600 V 50/60 Hz ac or ac/dc.

NOTE—Consult the manufacturer for other manufacturer-specific ratings.

The *National Electrical Code*® defines several switch types: General Use Switch, Isolating Switch, Motor-Circuit Switch, and Double-Throw Switch. In most cases, a switch is capable of interrupting/disconnecting its rated current at its rated voltage. An Isolating Switch does not have an interrupting rating and is actuated after the circuit has been opened by some other means. A Motor-Circuit Switch is rated in horsepower and is capable of interrupting the maximum overload current of a motor with the same horsepower rating.

The methods outlined may be used to verify specific characteristics of a switch that was originally built and tested in compliance with the requirements of NEMA Standards Publication KS 1. These methods are intended for field application and are, therefore, non-destructive in nature. Accordingly, these methods cannot be used to verify all performance capabilities of a switch since verification of some capabilities requires tests of a destructive nature.

Many tests, including those of a destructive nature, as defined in KS 1, are performed on representative samples of switches by the manufacturer, as part of a routine program of factory inspection.

The KS 3 Standards Publication is not intended, nor is it adequate, to verify proper electrical performance of a switch that has been disassembled, modified, rebuilt, refurbished, or handled in any manner not intended or authorized by the original manufacturer. Such switches should be removed from service.

1.2 Referenced Standards

In this publication, reference is made to the latest edition of the standards listed below. Copies are available from the indicated sources.

National Fire Protection Association
1 Batterymarch Park
Quincy, MA 02169

NFPA 70 *National Electrical Code*®
NFPA 70B *Recommended Practice for Electrical Equipment Maintenance*
NFPA 70E *Standard for Electrical Safety in the Workplace*

---

[1] For purposes of these guidelines, a qualified person is one who has skills and knowledge related to the construction and operation of the electrical equipment and installation and has received training to recognize and avoid the hazards involved. In addition, the person is trained:
—and authorized to test, energize, clear, ground, tag, and lockout circuits and equipment in accordance with established safety practices.
—in the proper care and use of protective equipment such as rubber gloves, hard hat, safety glasses or face shields, and flash resistant clothing, in accordance with established safety practices.
—in first aid.

© Copyright 2010 by the National Electrical Manufacturers Association.

National Electrical Manufacturers Association
1300 North 17th Street
Suite 1752
Rosslyn, Virginia 22209

Evaluating Water-Damaged Electrical Equipment
NEMA KS 1 *Enclosed and Miscellaneous Distribution Equipment Switches (600 Volts Maximum)*
NEMA KS 2 *Distribution Equipment Switch Application and Maintenance Guide, A User's Reference*
NEMA 250 *Enclosures for Electrical Equipment (1000 Volts Maximum)*

Underwriters Laboratories, Inc.
333 Pfingsten Road
Northbrook, IL 60062

UL 98 *Enclosed and Dead-Front Switches*
UL 977 *Fused Power-Circuit Devices*
UL 1429 *Pullout Switches*

© Copyright 2010 by the National Electrical Manufacturers Association.

Section 2
SAFETY PROCEDURES

The inspection and preventive maintenance of switches in service require the user to take all necessary precautions to avoid being injured.

2.1 Warning

2.1.1 Switch Testing

WARNING—Hazardous voltages in electrical equipment can cause death or severe personal injury. Turn off and lock out the power supplying this equipment before performing any of the following operations.

Unless otherwise specified in this publication, inspection, preventive maintenance, and testing must always be performed on equipment that is de-energized (note that certain tests require control power to conduct the test). Verify that there is no voltage present on incoming line and load terminals (and on control power terminals, if present) and between these terminals and ground to positively ascertain that the equipment is totally de-energized. The disconnecting or isolating means on the line side of the devices being checked and/or tested must be locked in the OFF position to ensure that the equipment will remain de-energized during these procedures.

Safety related work practices described in NFPA 70E must be followed at all times.

2.1.2 Test Equipment

WARNING—High voltages involved with some test equipment can cause death or serious injury. Do not touch or permit anyone else to touch the switch or the test leads when voltage is applied. Strict adherence to the safety procedures recommended by the manufacturers of the test equipment is required.

2.2 Safety Procedure

In all the following clauses, where removal of the enclosure cover is necessary, the following safety steps must be taken in the sequence shown.

2.2.1 Operate the switch to the OFF position. Turn OFF all power supplying the switch to electrically isolate it from all other circuits.

2.2.2 Open the enclosure and verify that there is no voltage on the incoming and load conductors (including control power conductors, if present) and between these conductors and ground to positively ascertain that the equipment is de-energized.

2.2.3 If disconnection of power and accessory leads, cables, or bus bars is required, be sure to properly identify all connections to ensure safe and accurate reconnection.

2.2.4 Before any functional tests are performed, be sure to connect the test switch with properly rated cable torqued to the recommended values marked on the rating label of the switch.

2.3 Reinstallation Safety Procedure

2.3.1 Do not re-energize equipment until all connections (power and control) are thoroughly checked for accuracy and tightness (torqued to value listed on the rating label), internal areas of enclosure are cleaned of any conductive loose parts or debris, all switches are turned off, and all enclosure covers are reinstalled.

© Copyright 2010 by the National Electrical Manufacturers Association.

2.3.2 If it is necessary to replace the switch, make sure the new switch is properly rated for the application.

© Copyright 2010 by the National Electrical Manufacturers Association.

Section 3
GUIDELINES

3.1 To Avoid Damaged or Otherwise Inoperable Switches Being Inadvertently Returned to Service

To avoid damaged or otherwise inoperable switches being inadvertently returned to service, it is suggested that such switches be destroyed.

3.2 Guidance Regarding Inspection and Preventive Maintenance Procedures

Industrial users have requested guidance regarding inspection and preventive maintenance procedures that could be carried out on a regularly scheduled basis. Sections 4 through 7 of this publication set forth guidelines for inspection, preventive maintenance, and testing. These clauses may be applied independently or in combination to establish such a program. For additional assistance, consult the manufacturer's published instructions or NFPA 70B.

3.3 For Information Regarding Switch Performance and Application

For information regarding switch performance and application refer to NEMA Standards Publications KS 1 and KS 2, respectively.

3.4 Water-Damaged Switches

Switches that are known to have been subjected to water damage should be replaced. For additional information, refer to the NEMA document *Evaluating Water-Damaged Electrical Equipment.*

3.5 Switch Inspection Once Each Year

It is recommended to inspect switches once each year or after any short circuit event.

© Copyright 2010 by the National Electrical Manufacturers Association.

Section 4
INSPECTION PROCEDURES

4.1 General

The following inspection practices are recommended.

4.2 Exposed Surfaces Temperature Check

4.2.1 Purpose

To determine if there is excessive temperature on the external cover of a switch.

CAUTION—Severe burns can result from high temperatures. Do not hold hand or fingers in contact with surfaces if excessive heat is felt.

4.2.2 Procedure

A switch that has been carrying its regular load for at least 3 hours just prior to inspection should be tested by feeling the external deadfront surfaces with the palm of the hand.

4.2.3 Results

If the temperature of these surfaces does not permit you to maintain contact for at least 3 seconds, this may be an indication of trouble and investigation is necessary. Thermographic (infrared) scanning has become a useful method of investigating thermal performance. Further investigation may be necessary. Proceed to 4.3.

4.3 Inspection of Enclosure Interior

4.3.1 Purpose

To evaluate the operating environment, the apparent condition of the switch, that proper conductors have been used, and if there is any visual indication that overheating has occurred.

4.3.2 Procedure

WARNING—Follow all safety procedures described in Section 2.

4.3.2.1 After being properly isolated, verify that the switch has been properly applied within its marked ratings. If the switch has not been applied within its ratings, it should be replaced with a switch suitable for the application.

4.3.2.2 Examine the switch surfaces for the presence of dust, dirt, soot, grease, or moisture. If such contamination is found, the surfaces should be cleaned. Refer to 5.2.2.1 for cleaning and precautionary instructions.

4.3.2.3 Examine the switch bases for cracks. The integrity of the base is important in withstanding the stresses imposed during operation. Switches should be replaced if cracks are found.

4.3.2.4 Verify that the conductors are of the correct size and type for the application. Visually check all electrical connections to the switch to be certain that such connections are clean and secure. Loose or contaminated connections increase electrical resistance, which can damage insulation and conductors and interfere with proper switch operation. Increased electrical resistance causes overheating of a connection. Such overheating is indicated by discoloration or cracks of the switch bases, discoloration or flaking of external metal parts, or melting or blistering of adjacent wire insulation. Pitting or melting of connection surfaces is a sign of arcing due to a loose or otherwise poor connection. (See Figures 1 and 2.)

© Copyright 2010 by the National Electrical Manufacturers Association.

a. If there is no evidence of looseness, e.g., overheating, do not disturb or tighten the connections.

b. If there is evidence of overheating (as noted in 4.2) or arcing, an investigation of the cause should be made and corrective steps taken. (See Section 5.)

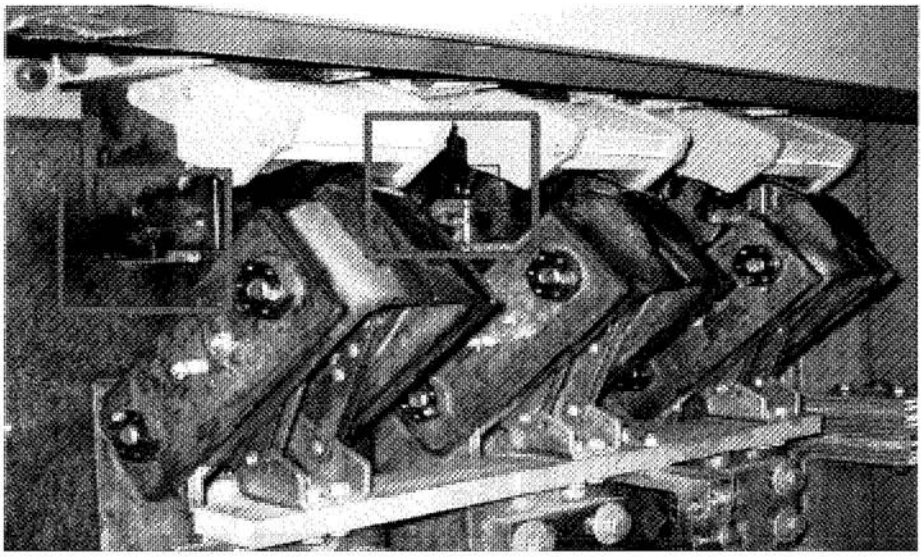

Figure 1
Pitting

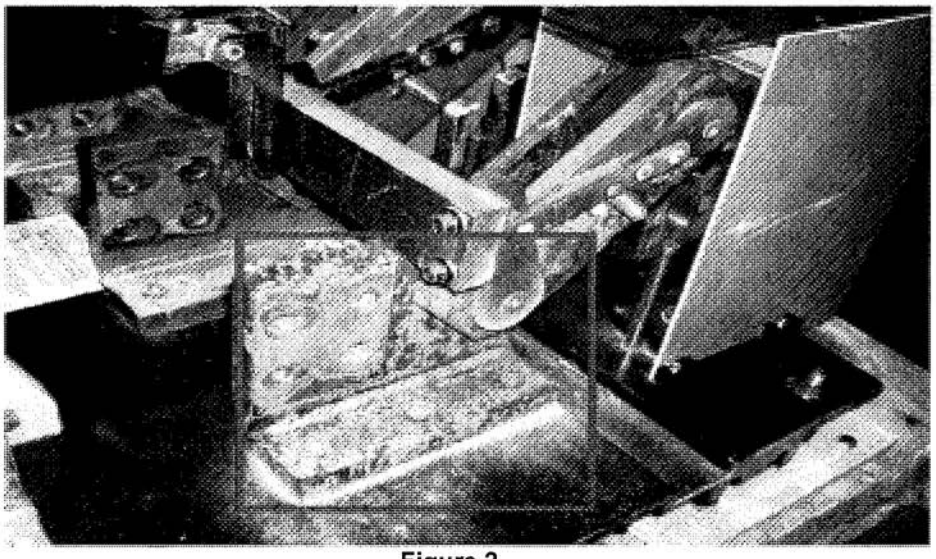

Figure 2
Heat Damage

4.3.2.5 Examine the switch for evidence of a high short circuit closing operation. Any of the following observations will warrant performing the Section 6 Test Procedures or the replacement of the switch. In some cases, switch interior renewal parts can be obtained from the manufacturer to bring the assembly back to a serviceable condition.

© Copyright 2010 by the National Electrical Manufacturers Association.

Evidence of excessive high current switch closing operation includes:

- Bright metal or metallic deposits on insulating surfaces or the enclosure interior
- An excessive number of small, bright metal balls resting on the enclosure bottom end wall
- Excessive black film on insulating surfaces or the enclosure interior adjacent to the contact air gap or arc chute exhaust
- Enclosure shape distortion caused by excessive internal pressure
- Contacts not fully engaging or closing
- Rough mechanism operation

4.3.2.6 Reinstallation Procedure

For reinstallation or replacement of the switch and/or accessories, follow the installation safety procedures given in 2.3 in conjunction with any installation instructions provided by the manufacturer.

© Copyright 2010 by the National Electrical Manufacturers Association.

Section 5
PREVENTIVE MAINTENANCE

5.1 General

Under normal conditions, properly applied switches require maintenance only for verification of environmental conditions and that the correct enclosure type for those conditions is being used. However, when inspections determine an abnormal condition and indicate the possibility of damage, it may be necessary to perform certain maintenance steps. This clause is intended to assist the user in performing these steps.

These steps cover the only maintenance that should be performed on switches unless specifically authorized by the switch manufacturer.

5.2 Environmental Evaluation

5.2.1 Purpose

To examine the operating environment and the switch's physical condition. Preventive maintenance and corrective actions are included as appropriate.

5.2.2 Procedure

WARNING—Follow all safety procedures described in Section 2.

The switch enclosure must be opened to perform the following steps and, in some cases, it will be necessary to remove the switch from the enclosure.

5.2.2.1 After being properly isolated, examine the switch surfaces for dust, dirt, soot, or moisture. If evidence of contaminates or moisture is found, or more than a thin film of dust, dirt, or soot is seen, the switch should be cleaned as suggested below.

The insulating surfaces of the switch should be cleaned using a lint free dry cloth, brush, or vacuum cleaner. Avoid blowing material into the switch or into surrounding equipment.

CAUTION—Commercial cleaners and lubricants may attack and damage the plastic insulating materials of the switch. Therefore, such cleaners should not be used. Only the methods described in 5.2.2.1 should be used. Follow manufacturer's recommendations for the use of grease.

Steps should be taken to eliminate the source of the contamination or to provide an appropriate enclosure that will protect against the future entry of contaminants. With respect to the prevention of moisture, the switch should be housed in an enclosure appropriate for the environment.

5.2.2.2 Examine the switch and terminations for signs of overheating as described in 4.3.2.4. If such evidence is found, the following maintenance steps should be performed.

5.2.2.2.1 Copper switch terminals and connecting straps (wire connectors and bus bars) can normally be cleaned. They should be carefully disassembled, cleaned, and dressed, following the manufacturer's instructions. All metal and abrasive particles should be removed before reassembling. Care should be taken to ensure that the switch terminals and connecting straps are properly torqued during re-installation.

CAUTION—When performing this procedure, extreme care should be exercised to prevent any damage to plated connections or mechanical disturbance to the switch and to prevent any particles from entering the switch mechanism, contacts, or arc suppression areas.

© Copyright 2010 by the National Electrical Manufacturers Association.

If the damage is extensive, or cannot be corrected by dressing the surfaces, the damaged parts should be replaced if they are intended by the manufacturer to be replaceable. If the damaged parts are not intended to be replaceable, the complete switch and/or bus connections should be replaced.

5.2.2.2.2 Aluminum wire connectors and bus bars cannot be cleaned or repaired; therefore, they must be replaced.

5.2.2.2.3 If wire conductors are damaged, the damaged lengths of the conductors should be cut off before reinstalling the conductors. (See 5.4.)

5.3 Fuse Provisions

5.3.1 If the switch has fuses and a fuse base, visually check the fuse connections to the switch for evidence of looseness, overheating, or arcing on the fuse clips or mounting arrangements for the fuse. (See 4.3.2.4.)

5.3.2 If the connecting surfaces show evidence of overheating, the switch and fuses should be replaced.

5.3.3 If there is no evidence of overheating or looseness, do not disturb or tighten the connections.

5.4 Wire Connectors

5.4.1 If conductors are removed from the wiring connectors, the following steps should be performed.

5.4.1.1 Examine wire connectors. If the wire connectors appear to be in good condition, they may be reused. If the connectors, screws, or their plating appear worn or damaged, or there is evidence of cross threading or binding, the connector assembly should be replaced.

5.4.1.2 If the wire conductors are damaged, the damaged wires should be repaired or replaced.

5.4.1.3 When required, an oxide inhibiting compound should be applied.

5.4.1.4 All wire connectors should be torqued in accordance with the nameplate marking or the switch manufacturer's instructions.

5.5 Reinstallation Procedure

If the switch needs to be reinstalled or replaced, follow the safety installation procedures given in 2.3.

© Copyright 2010 by the National Electrical Manufacturers Association.

Section 6
TEST PROCEDURES

6.1 General

The KS 3 Standards Publication is not intended, nor is it adequate, to verify proper electrical performance of a switch that has been disassembled, modified, rebuilt, refurbished, or handled in any manner not intended or authorized by the original switch manufacturer. The following non-destructive tests may be used to verify specific operational characteristics of switches: mechanical operation test, insulation resistance test, and individual pole resistance test (millivolt drop test).

6.2 Mechanical Operation Test

6.2.1 Purpose

To verify that the switch mechanism is operating freely.

6.2.2 Equipment

Appropriately rated continuity indicating device.

6.2.3 Procedure

WARNING—Follow all safety procedures described in Section 2.

6.2.3.1 After disconnecting and locking out all power, operate the switch ON and OFF 2 or 3 times. The switch handle should operate smoothly without binding.

6.2.3.2 Using an ohmmeter or other indicating device, verify that all switch contacts are open when the handle is in the OFF position and closed when the handle is in the ON position.

6.2.3.3 For switches that are provided with mechanical trip provisions (generally indicated by a test button), operate the tripping means according to the manufacturer's instructions. With the switch in the tripped position, verify that the contacts are open using an ohmmeter (or other indicating device). Reset the switch according to the manufacturer's instructions and operate the switch to the ON and OFF positions. Use an ohmmeter (or other indicating device) to verify that all the contacts are closing and opening respectively.

6.2.4 Results

The switch must be repaired or replaced if:

a. The contacts are not open with the switch in the OFF position

b. The contacts are not closed with the switch in the ON position

c. The switch does not reset

d. The mechanical trip provisions (if provided) do not trip the switch

6.2.5 Reinstallation Procedure

For reinstallation or replacement of the switch and/or accessories, follow the safety installation procedures given in 2.3.

© Copyright 2010 by the National Electrical Manufacturers Association.

6.3 Insulation Resistance Test

CAUTION—If applied incorrectly, the voltages utilized in the insulation resistance tests may damage electronic or other accessory components. Refer to the manufacturer's instructions for guidelines.

NOTE—Where the switch can be safely isolated as installed, the test may be performed with the switch in its equipment.

See Figure 3 for typical test set-up.

6.3.1 Purpose

To determine the adequacy of the insulation between line and load terminals, between poles, and between each pole and ground.

6.3.2 Equipment

Perform dielectric tests in accordance with the manufacturer's instructions.

This test requires an insulation resistance tester capable of applying a voltage of at least 500 volts. It should also be noted that more in-depth information can be obtained when 1000 volt testers are used since they are more likely to detect deteriorated insulation systems. (See Figure 3.)

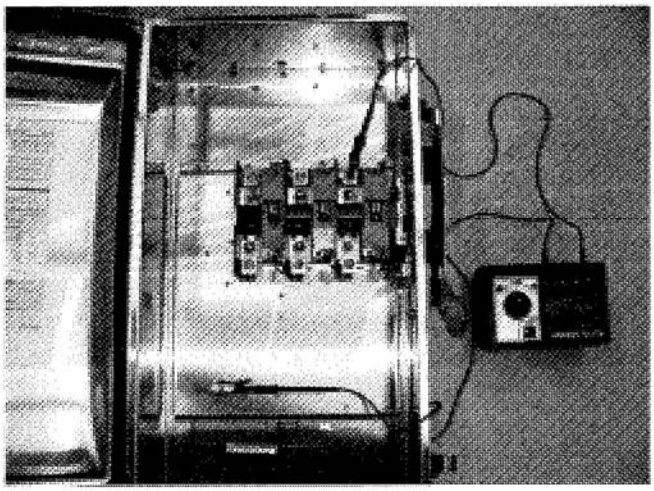

Figure 3
Typical Insulation Resistance Test Set-Up

6.3.3 Procedure

WARNING—Follow all safety procedures described in Section 2.

CAUTION—If applied incorrectly, the voltages utilized in the insulation resistance test may damage electronic or other accessory components. To avoid such damage, the following procedure should be adhered to closely. Do not apply test voltages to accessory terminals.

6.3.3.1 After disconnecting and locking out all power supplying the device to be tested, remove the switch from the electrical system. In cases where the switch can be safely isolated/disconnected from line and load connections as installed, the test may be performed with the switch in its equipment.

© Copyright 2010 by the National Electrical Manufacturers Association.

6.3.4 Test

6.3.4.1 All exposed metal parts except line, load, and accessory terminals should be electrically connected together.

6.3.4.2 Using an insulation resistance tester, apply a voltage of at least 500 volts to determine the resistance. Voltage is to be applied as follows.

WARNING—High Voltage—Do not touch switch or leads. See 2.1.2 for proper safety procedure.

6.3.4.2.1 Between line and load terminals of each individual pole with the switch in the OFF position and tripped position if possible.

6.3.4.2.2 Between terminals of adjacent poles with the switch in the ON position.

6.3.4.2.3 From line terminals to the metal enclosure with the switch in the ON position.

6.3.5 Results

All resistance readings should be one megohm or greater for each measurement. If any reading is less than one megohm, the switch should be replaced or the manufacturer should be consulted before restoring the switch to service. Any reading less than one megohm may indicate contaminated, unsound, or cracked insulating material.

6.3.6 Reinstall Switch

If applicable, reinstall the switch following the manufacturer's instructions. Also refer to 5.4 for information on reinstalling wire connectors and/or conductors.

6.3.7 Reinstallation Procedure

For reinstallation or replacement of the switch and/or accessories, follow the safety installation procedures given in 2.3.

6.4 Individual Pole Resistance Test (Millivolt Drop)

See Figure 4, Figure 5, and Figure 6 for typical test set up.

NOTE—The switch should be removed from the equipment for this test. In cases where the switch can be safely isolated as installed, the test may be performed with the switch in its equipment.

© Copyright 2010 by the National Electrical Manufacturers Association.

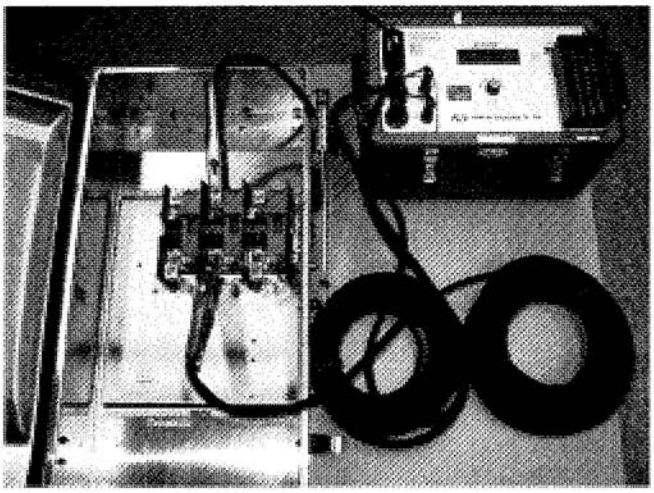

Figure 4
Individual Pole Resistance Test Set-Up

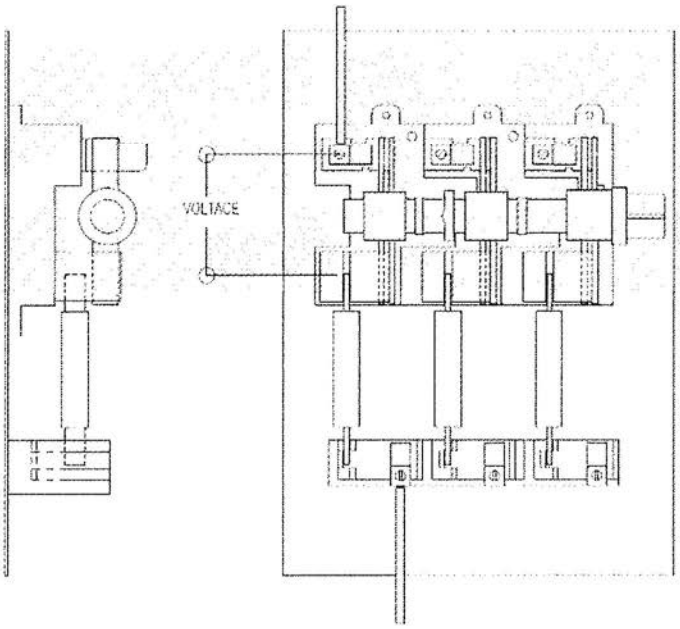

Figure 5
Fused Switch Individual Pole Resistance Test Set-Up

© Copyright 2010 by the National Electrical Manufacturers Association.

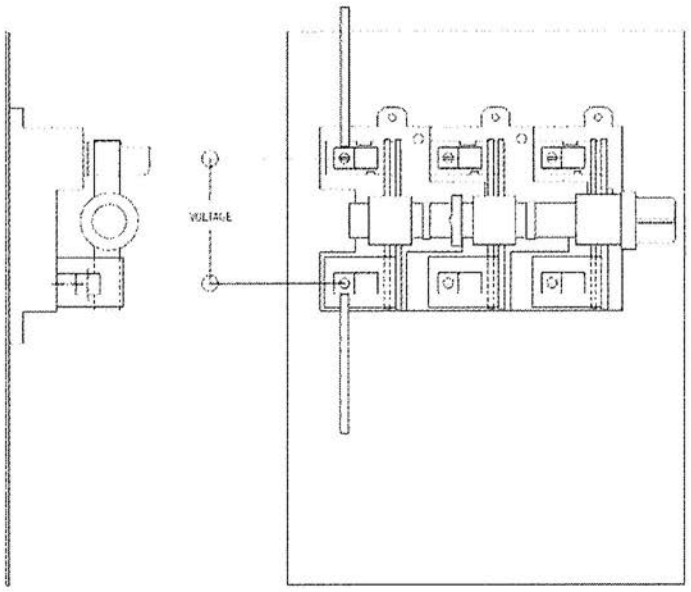

Figure 6
Non-Fused Switch Individual Pole Resistance Test Set-Up

6.4.1 Purpose

To assess the electrical integrity of internal connections and contacts in a switch. This can be done by conducting a millivolt drop test across the line and load terminals of each pole with the switch contacts closed.

The millivolt drop (resistance) of a switch pole can vary significantly because of inherent variability in the extremely low resistance of the electrical contacts and connectors. Such variations do not necessarily predict unacceptable performance and should not be used as the sole criteria for determination of acceptability.

6.4.2 Equipment

6.4.2.1 This test should be conducted using a 24 volt, or less, direct current power supply capable of supplying the rated current of the switch. For switch rated higher than 500 amperes, the power supply should be capable of delivering no less than 500 amperes.

6.4.2.2 If the above equipment is not available for field tests, a Digital Low Resistance Ohmmeter (DLRO), or 4-point tester, capable of 10 to 100 amperes (dc) may be used.

NOTE—Use of a multimeter or low current ohmmeter in place of the power supply will not provide an accurate or reliable measurement of millivolt drop and should not be used.

CAUTION—Do not exceed the current rating of the fuse where the fuse cannot be isolated from the test circuit.

6.4.3 Procedure

WARNING—Follow all safety procedures described in Section 2.

6.4.3.1 After being properly isolated, remove the switch from the enclosure. In cases where the switch can be safely isolated/disconnected as installed, the test may be performed with the switch in its equipment.

© Copyright 2010 by the National Electrical Manufacturers Association.

6.4.4 Test

NOTE—If the switch is equipped with an under-voltage trip release, energize the trip release to allow proper operation of the switch.

6.4.4.1 The test is performed as follows.

6.4.4.1.1 Apply test current across a pole equal to the switch rating (or 500 Amperes minimum for switch rated in excess of 500 Amperes). Record the millivolt drop and the test current. Do not maintain current for more than 1 minute. If this equipment is not available, use the following test.

6.4.4.1.2 Apply test current across a pole of 10 Amperes, or the Ampere rating of the switch, for switch rated less than 100 Amperes. For switch rated more than 100 Amperes, apply a test current across a pole of 100 Amperes. Record the millivolt drop and the test current, or resistance. Do not maintain current for more than 1 minute.

6.4.4.1.3 De-energize the test circuit. Manually operate the switch to the OFF and then ON positions.

6.4.4.1.4 Repeat steps 6.4.4.1.1 and 6.4.4.1.2 for a total of three readings on the pole being tested.

6.4.4.1.5 Repeat steps 6.4.4.1.1 through 6.4.4.1.3 for each of the remaining poles of the switch.

6.4.5 Results

Test results will vary according to the switch ampere rating and manufacturer. The manufacturer should be consulted to determine the maximum allowable voltage drop. If the average test values of any pole of the switch exceed the maximum allowable drop, the switch may have reached the end of life and additional tests may have to be conducted.

NOTE—Inconsistent readings could be the result of oxide films or foreign material on the contact surfaces, depending on the service history of the switch. If high millivolt or high resistance readings are detected, refer to the manufacturer's recommendations, and if necessary, clean and/or lubricate the contact surfaces, then repeat tests in this section. If results are still out of acceptable range, the switch should not be returned to service.

6.4.6 Reinstall Switch

If applicable, reinstall the switch following manufacturer's instructions. Also refer to 5.4 for information on reinstalling wire connectors and/or conductors.

6.4.7 Reinstallation Procedure

For reinstallation or replacement of the switch and/or accessories, follow the safety installation procedures given in 2.3.

© Copyright 2010 by the National Electrical Manufacturers Association.

Section 7
ACCESSORY DEVICE TEST PROCEDURES

7.1 General

If testing instructions for the specific accessory being tested are available from the manufacturer, those instructions should be followed to verify the operation of the accessory. If the manufacturer's instructions are not available, the tests described below may be used to verify the basic operation of the accessory.

7.2 Shunt Trip Release Tests

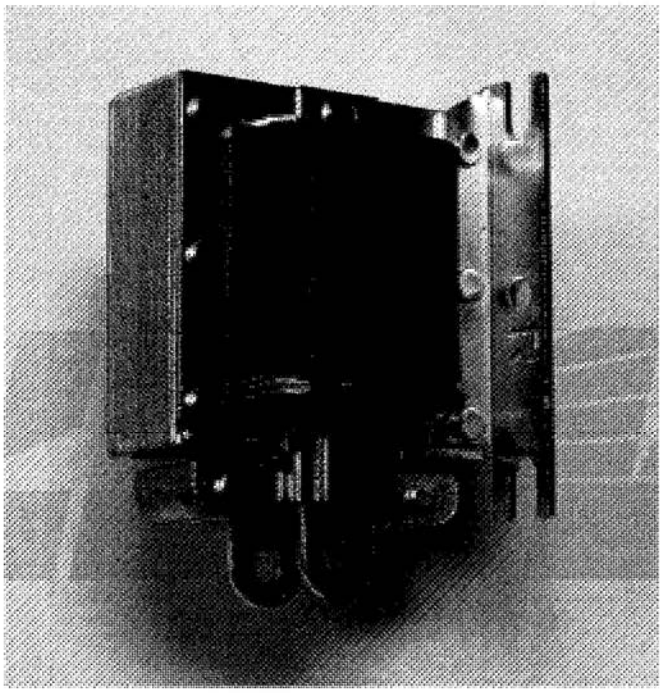

Figure 7
Sample Shunt Trip Release

7.2.1 Purpose

To verify that the shunt trip release device (Figure 7) will trip the switch when energized.

7.2.2 Equipment

This test requires a power supply capable of maintaining the rated voltage.

7.2.3 Procedure

WARNING—Follow all safety procedures described in Section 2.

CAUTION—Switches and accessory devices can be damaged if power is applied to the wrong terminals. The specific lead wires or terminals for each accessory must be properly identified before conducting any of the following tests.

7.2.3.1 After disconnecting and locking out all power, isolate the shunt trip solenoid leads from the control circuit for testing.

© Copyright 2010 by the National Electrical Manufacturers Association.

7.2.3.2 Connect a test power supply to the terminals (or leads) of the shunt trip release device.

WARNING—High Voltage. Do not touch switch or test leads while voltage is applied.

7.2.3.3 Operate the switch to the ON position.

7.2.3.4 Set the power supply voltage to 75% of the rated voltage of the shunt trip and energize. The switch should open. If the switch with shunt trip release is used in a ground fault relay system, use 55% of the rated voltage instead of 75% of the rated voltage.

CAUTION—If the switch does not open within 1 to 2 seconds, turn off the test power supply to prevent possible damage to the shunt trip release coil.

7.2.3.5 When the test is completed, turn off the test power supply, disconnect it from the shunt trip release device terminals (or leads), and reconnect the control circuit wires to the shunt trip release device terminals (or leads). If an under-voltage trip release device was connected during the test, turn off the test power supply, disconnect the test power supply wires, and reconnect the control circuit wires to the under-voltage release device.

7.2.4 Results

The switch should open when the power supply to the shunt trip release is turned on. If the switch does not open, check the connections and repeat the test. If the switch still does not open, replace the shunt trip release, if replaceable. If it is not possible to replace the shunt trip release, the switch should be replaced.

7.2.5 Reinstallation Procedure

If the switch needs to be reinstalled or replaced, follow the safety installation procedures given in 2.3 and the manufacturer's instructions.

7.3 Electrical Operator Tests

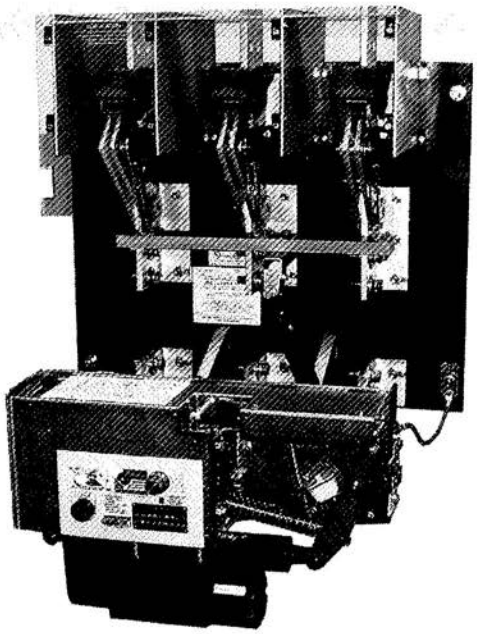

Figure 8
Sample Electrical Operator / Switch Assembly

© Copyright 2010 by the National Electrical Manufacturers Association.

7.3.1 Purpose

To verify that the electrical operator (Figure 8) will operate the switch to the ON and OFF positions.

7.3.2 Equipment

This test requires a power supply capable of maintaining the rated voltage.

7.3.3 Procedure

WARNING—Follow all safety procedures described in Section 2.

CAUTION—Switches and accessory devices can be damaged if power is applied to the wrong terminals. The specific lead wires or terminals for each accessory must be properly identified before conducting any of the following tests.

7.3.3.1 After disconnecting and locking out all power, remove the control circuit wires from the terminals of the electrical operator.

7.3.3.2 Set test power supply to the rated voltage of the electrical operator and connect to the terminals of the electrical operator marked "common" and "close" or "on."

7.3.3.3 With the switch in the OFF position, turn on the test power supply. The switch contacts should close.

WARNING—High Voltage. Do not touch switch or test leads while voltage is applied.

7.3.3.4 Turn the test power supply off. Disconnect its leads to the electrical operator.

7.3.3.5 Connect the test power supply leads to the terminals of the electrical operator marked "common" and "open" or "off."

7.3.3.6 With the switch in the ON position, turn on the test power supply. The switch contacts should open.

7.3.3.7 When the test is completed, turn off the test power supply, disconnect it from the electrical operator terminals, and reconnect the control circuit wires to the electrical operator terminals.

NOTE—It may also be possible to test the operation of the electrical operator by leaving the control circuit wiring in place and energized and pushing the "open" and "close" buttons on the operator. Follow step 7.3.3 to ensure that the main power to the switch is disconnected, but the power to the control circuits would be left in place.

7.3.4 Results

The switch should operate to the ON and OFF positions when the above steps are followed. If the switch does not operate properly, check the connections and ensure that there is no obvious obstruction of the operating mechanism and repeat the test. If the electrical operator still does not operate properly, it should be replaced.

7.3.5 Reinstallation Procedure

For reinstallation or replacement of the switch and/or accessories, follow the safety installation procedures given in 2.3.

© Copyright 2010 by the National Electrical Manufacturers Association.

7.4 Auxiliary Switch Tests

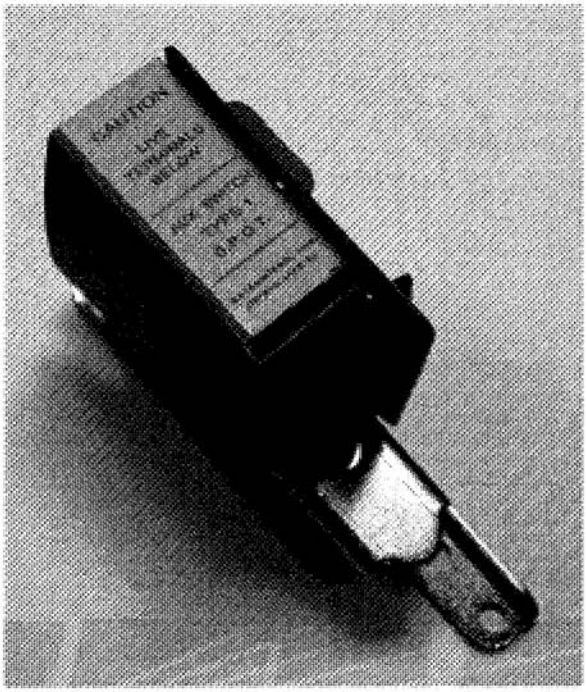

Figure 9
Sample Auxiliary Switch

7.4.1 Purpose

To verify that the contacts of the auxiliary switch(es) (see Figure 9) change status when the main switch contacts are opened and closed.

7.4.2 Equipment

This test requires an ohmmeter or low voltage continuity tester.

7.4.3 Procedure

WARNING—Follow all safety procedures described in Section 2.

7.4.3.1 Remove the control circuit wires from the terminals (or leads) of the auxiliary switch(es).

7.4.3.2 Starting with the main switch in the OFF position, use an ohmmeter or continuity tester connected to the terminals (or leads) of each auxiliary switch, to verify that its contact position (open or closed) is in agreement with the wiring diagram provided by the manufacturer.

7.4.3.3 Connect the ohmmeter or low voltage continuity tester to the terminals (or leads) of one auxiliary switch to monitor the contact.

7.4.3.4 Operate the main switch to the ON position. The auxiliary switch contact should change position.

7.4.3.5 Repeat steps 7.4.3.2 through 7.4.3.4 for each auxiliary switch.

© Copyright 2010 by the National Electrical Manufacturers Association.

7.4.3.6 When the test is completed, reconnect the control circuit wires to the terminals (or leads) of the auxiliary switch(es). If an under-voltage trip release device was connected, refer to 7.2.3.5 for instructions.

7.4.4 Results

Each auxiliary contact should change position (move from open to closed or vice versa) as the main switch is operated from the OFF to ON or ON to OFF positions. If the auxiliary switches do not perform correctly, check the connections and repeat the test. If performance is still incorrect, the auxiliary switches should be replaced; or if the auxiliary switch is not replaceable, replace the complete switch.

7.4.5 Reinstallation Procedure

For reinstallation or replacement of the switch and/or accessories, follow the safety installation procedures given in 2.3.

§

© Copyright 2010 by the National Electrical Manufacturers Association.

Renewal Parts

EATON | Cutler-Hammer

Safety Switches

Renewal Parts

New Information

Description	*Page*
Safety Switch Renewal Parts	
DG224NGK to DH225NRK	2
DH225NWK to DH321NCK	3
DH321NDK to DH325FPK	4
DH325FRK to DH361NDK-10	5
DH361NDKLW to DH362NWKX	6
DH362UCK to DH363UGK2	7
DH363URK to DH365NPKLW	8
DH365NRK to DH425FGK	9
DH426FGK to DT224URK-N	10
DT224URK-NPS to DT363FWK	11
DT363NWK to DT663URK	12

Table 1. Safety Switch Renewal Parts

Catalog Number	Base or Assembly		Fuse Base and Lower Assembly		Line Shields	Operating Mechanism	Operating Handle
	Type	Part Number	Type	Part Number			
DG224NGK	Switching Base	70-7820-2	Fuse Base	70-7820-4 ①	—	70-7833-4	70-7820-6
DG224NRK	Switching Base	70-7820-2	Fuse Base	70-7820-4 ①	—	70-7833-4	70-7820-7
DG225FGK	Switch Interior Assembly	70-8063-3	Fuse Base	70-8063-7	70-8063-8	70-7833-5	70-7833-2
DG225FRK	Switch Interior Assembly	70-8063-3	Fuse Base	70-8063-7	70-8063-8	70-7833-5	70-7833-2
DG225NGK	Switch Interior Assembly	70-8063-3	Fuse Base	70-8063-7	70-8063-8	70-7833-5	70-7833-2
DG225NRK	Switch Interior Assembly	70-8063-3	Fuse Base	70-8063-7	70-8063-8	70-7833-5	70-7833-2
DG226FGK	Switch Interior Assembly	70-8064-3	Fuse Base	70-8064-7	70-8064-8	70-7833-6	70-7833-2
DG226FRK	Switch Interior Assembly	70-8064-3	Fuse Base	70-8064-7	70-8064-8	70-7833-6	70-7833-2
DG226NGK	Switch Interior Assembly	70-8064-3	Fuse Base	70-8064-7	70-8064-8	70-7833-6	70-7833-2
DG226NRK	Switch Interior Assembly	70-8064-3	Fuse Base	70-8064-7	70-8064-8	70-7833-6	70-7833-2
DG324NGK	Switching Base	70-7820	Fuse Base	70-7820-4 ②	—	70-7833-4	70-7820-6
DG324NRK	Switching Base	70-7820	Fuse Base	70-7820-4 ②	—	70-7833-4	70-7820-7
DG324UGK	Switching Base	70-7820-3	—	—	—	70-7833-4	70-7820-6
DG324URK	Switching Base	70-7820-3	—	—	—	70-7833-4	70-7820-7
DG325FGK	Switch Interior Assembly	70-8063-4	Fuse Base	70-8063-7	70-8063-8	70-7833-5	70-7833-2
DG325FRK	Switch Interior Assembly	70-8063-4	Fuse Base	70-8063-7	70-8063-8	70-7833-5	70-7833-2
DG325NGK	Switch Interior Assembly	70-8063-4	Fuse Base	70-8063-7	70-8063-8	70-7833-5	70-7833-2
DG325NRK	Switch Interior Assembly	70-8063-4	Fuse Base	70-8063-7	70-8063-8	70-7833-5	70-7833-2
DG325UGK	Switch Interior Assembly	70-8063-2	—	—	70-8063-8	70-7833-5	70-7833-2
DG325URK	Switch Interior Assembly	70-8063-2	—	—	70-8063-8	70-7833-5	70-7833-2
DG326FGK	Switch Interior Assembly	70-8064-4	Fuse Base	70-8064-7	70-8064-8	70-7833-6	70-7833-2
DG326FGK-EXC	Switch Interior Assembly	70-8064-4	Fuse Base	70-8064-7	70-8064-8	70-7833-6	70-7833-2
DG326FRK	Switch Interior Assembly	70-8064-4	Fuse Base	70-8064-7	70-8064-8	70-7833-6	70-7833-2
DG326NGK	Switch Interior Assembly	70-8064-4	Fuse Base	70-8064-7	70-8064-8	70-7833-6	70-7833-2
DG326NRK	Switch Interior Assembly	70-8064-4	Fuse Base	70-8064-7	70-8064-8	70-7833-6	70-7833-2
DG326UGK	Switch Interior Assembly	70-8064-2	—	—	70-8064-8	70-7833-6	70-7833-2
DG326URK	Switch Interior Assembly	70-8064-2	—	—	70-8064-8	70-7833-6	70-7833-2
DH221FDK	Switching Base	70-7758-16	Fuse Base	70-7758-29	70-7758-34	70-7813	70-7813-2
DH221FGK	Switching Base	70-7758-16	Fuse Base	70-7758-29	70-7758-34	70-7813	70-7813-2
DH221NDK	Switching Base	70-7758-16	Fuse Base	70-7758-29	70-7758-34	70-7813	70-7813-2
DH221NDK5	Switching Base	70-7758-16	Fuse Base	70-7758-29	70-7758-34	70-7813	70-7813-2
DH221NGK	Switching Base	70-7758-16	Fuse Base	70-7758-29	70-7758-34	70-7813	70-7813-2
DH221NGK5	Switching Base	70-7758-16	Fuse Base	70-7758-29	70-7758-34	70-7813	70-7813-2
DH221NRK	Switching Base	70-7758-16	Fuse Base	70-7758-29	70-7758-34	70-7813	70-7813-2
DH221NWK	Switching Base	70-7758-16	Fuse Base	70-7758-29	70-7758-34	70-7813	70-7813-3
DH221NWKX	Switching Base	70-7758-16	Fuse Base	70-7758-29	70-7758-34	70-8304	70-7813-3
DH222NDK	Switching Base	70-7758-36	Fuse Base	70-7997-4	70-7758-34	70-7813	70-7813-2
DH222NDK5	Switching Base	70-7758-36	Fuse Base	70-7997-4	70-7758-34	70-7813	70-7813-2
DH222NGK	Switching Base	70-7758-36	Fuse Base	70-7997-4	70-7758-34	70-7813	70-7813-2
DH222NGK5	Switching Base	70-7758-36	Fuse Base	70-7997-4	70-7758-34	70-7813	70-7813-2
DH222NRK	Switching Base	70-7758-36	Fuse Base	70-7997-4	70-7758-34	70-7813	70-7813-2
DH222NRK5	Switching Base	70-7758-36	Fuse Base	70-7997-4	70-7758-34	70-7813	70-7813-2
DH222NWK	Switching Base	70-7758-36	Fuse Base	70-7997-4	70-7758-34	70-7813	70-7813-3
DH222NWKX	Switching Base	70-7758-36	Fuse Base	70-7997-4	70-7758-34	70-8304	70-7813-3
DH223NDK	Switching Base	70-7758-7	Fuse Base	70-7758-23	70-7758-35	70-7813	70-7813-2
DH223NGK	Switching Base	70-7758-7	Fuse Base	70-7758-23	70-7758-35	70-7813	70-7813-2
DH223NRK	Switching Base	70-7758-7	Fuse Base	70-7758-23	70-7758-35	70-7813	70-7813-2
DH223NRK5	Switching Base	70-7758-7	Fuse Base	70-7758-23	70-7758-35	70-7813	70-7813-2
DH223NWK	Switching Base	70-7758-7	Fuse Base	70-7758-23	70-7758-35	70-7813	70-7813-3
DH223NWKX	Switching Base	70-7758-7	Fuse Base	70-7758-23	70-7758-35	70-8304	70-7813-3
DH224NDK	Switching Base	70-7759-7	Fuse Base	70-7759-4 ①	70-7759-11	70-7833-4	70-7833-2
DH224NGK	Switching Base	70-8266-3	Fuse Base	70-8266-4 ①	70-7759-11	70-7833-4	70-7833-2
DH224NRK	Switching Base	70-8266-3	Fuse Base	70-8266-4 ①	70-7759-11	70-7833-4	70-7833-2
DH224NWK	Switching Base	70-7759-7	Fuse Base	70-7759-4 ①	70-7759-11	70-7833-4	70-7833-3
DH224NWKX	Switching Base	70-7759-7	Fuse Base	70-7759-4 ①	70-7759-11	70-8305	70-7833-3
DH225FDK	Switch Interior Assembly	70-8063-3	Fuse Base	70-8063-7	70-8063-8	70-7833-5	70-7833-2
DH225FGK	Switch Interior Assembly	70-8063-3	Fuse Base	70-8063-7	70-8063-8	70-7833-5	70-7833-2
DH225FPK	Switch Interior Assembly	70-8063-3	Fuse Base	70-8063-7	70-8063-8	70-7833-5	70-7833-2
DH225FRK	Switch Interior Assembly	70-8063-3	Fuse Base	70-8063-7	70-8063-8	70-7833-5	70-7833-2
DH225NDK	Switch Interior Assembly	70-8063-3	Fuse Base	70-8063-7	70-8063-8	70-7833-5	70-7833-2
DH225NGK	Switch Interior Assembly	70-8063-3	Fuse Base	70-8063-7	70-8063-8	70-7833-5	70-7833-2
DH225NPK	Switch Interior Assembly	70-8063-3	Fuse Base	70-8063-7	70-8063-8	70-7833-5	70-7833-2
DH225NRK	Switch Interior Assembly	70-8063-3	Fuse Base	70-8063-7	70-8063-8	70-7833-5	70-7833-2

① Two used.
② Three used.

Catalog Number	Base or Assembly		Fuse Base and Lower Assembly		Line Shields	Operating Mechanism	Operating Handle
	Type	Part Number	Type	Part Number			
DH225NWK	Switch Interior Assembly	70-8063-3	Fuse Base	70-8063-7	70-8063-8	70-7833-5	70-7833-2
DH225NWKX	Switch Interior Assembly	70-8063-3	Fuse Base	70-8063-7	70-8063-8	70-8305-2	70-7833-2
DH226FDK	Switch Interior Assembly	70-8064-3	Fuse Base	70-8064-7	70-8064-8	70-7833-6	70-7833-2
DH226FGK	Switch Interior Assembly	70-8064-3	Fuse Base	70-8064-7	70-8064-8	70-7833-6	70-7833-2
DH226FPK	Switch Interior Assembly	70-8064-3	Fuse Base	70-8064-7	70-8064-8	70-7833-6	70-7833-2
DH226FRK	Switch Interior Assembly	70-8064-3	Fuse Base	70-8064-7	70-8064-8	70-7833-6	70-7833-2
DH226FWK	Switch Interior Assembly	70-8064-3	Fuse Base	70-8064-7	70-8064-8	70-7833-6	70-7833-2
DH226NDK	Switch Interior Assembly	70-8064-3	Fuse Base	70-8064-7	70-8064-8	70-7833-6	70-7833-2
DH226NGK	Switch Interior Assembly	70-8064-3	Fuse Base	70-8064-7	70-8064-8	70-7833-6	70-7833-2
DH226NPK	Switch Interior Assembly	70-8064-3	Fuse Base	70-8064-7	70-8064-8	70-7833-6	70-7833-2
DH226NRK	Switch Interior Assembly	70-8064-3	Fuse Base	70-8064-7	70-8064-8	70-7833-6	70-7833-2
DH226NWK	Switch Interior Assembly	70-8064-3	Fuse Base	70-8064-7	70-8064-8	70-7833-6	70-7833-2
DH227FDK	Switch Interior Assembly	70-8065-3	Fuse Base	70-8065-7	70-8064-8	70-7833-6	70-7833-2
DH227FGK	Switch Interior Assembly	70-8065-3	Fuse Base	70-8065-7	70-8064-8	70-7833-6	70-7833-2
DH227NDK	Switch Interior Assembly	70-8065-3	Fuse Base	70-8065-7	70-8064-8	70-7833-6	70-7833-2
DH227NGK	Switch Interior Assembly	70-8065-3	Fuse Base	70-8065-7	70-8064-8	70-7833-6	70-7833-2
DH227NPK	Switch Interior Assembly	70-8065-3	Fuse Base	70-8065-7	70-8064-8	70-7833-6	70-7833-2
DH227NRK	Switch Interior Assembly	70-8065-3	Fuse Base	70-8065-7	70-8064-8	70-7833-6	70-7833-2
DH227NWK	Switch Interior Assembly	70-8065-3	Fuse Base	70-8065-7	70-8064-8	70-7833-6	70-7833-3
DH261FDK	Switching Base	70-7758-17	Fuse Base	70-7758-30	70-7758-34	70-7813	70-7813-2
DH261FDK6	Switching Base	70-7758-17	Fuse Base	70-7758-30	70-7758-34	70-7813	70-7813-2
DH261FGK	Switching Base	70-7758-17	Fuse Base	70-7758-30	70-7758-34	70-7813	70-7813-2
DH261FGK6	Switching Base	70-7758-17	Fuse Base	70-7758-30	70-7758-34	70-7813	70-7813-2
DH261FWK	Switching Base	70-7758-17	Fuse Base	70-7758-30	70-7758-34	70-7813	70-7813-3
DH261FWKX	Switching Base	70-7758-17	Fuse Base	70-7758-30	70-7758-34	70-8304	70-7813-3
DH261UGK	Switching Base	70-7758-18	—	—	70-7758-34	70-7813	70-7813-2
DH262FDK	Switching Base	70-7997-3	Fuse Base	70-7997-6	70-7758-34	70-7813	70-7813-2
DH262FDK6	Switching Base	70-7997-3	Fuse Base	70-7997-6	70-7758-34	70-7813	70-7813-2
DH262FGK	Switching Base	70-7997-3	Fuse Base	70-7997-6	70-7758-34	70-7813	70-7813-2
DH263FDK	Switching Base	70-7758-9	Fuse Base	70-7758-25	70-7758-35	70-7813	70-7813-2
DH263FGK	Switching Base	70-7758-9	Fuse Base	70-7758-25	70-7758-35	70-7813	70-7813-2
DH263UDK	Switching Base	70-7758-11	—	—	70-7758-35	70-7813	70-7813-2
DH263UGK	Switching Base	70-7758-11	—	—	70-7758-35	70-7813	70-7813-2
DH264FDK	—	—	Fuse Base	70-7759-5 ①	70-7759-11	70-7833-4	70-7833-2
DH264FGK	—	—	Fuse Base	70-8266-4 ①	70-7759-11	70-7833-4	70-7833-2
DH264FWK	—	—	Fuse Base	70-7759-5 ①	70-7759-11	70-7833-4	70-7833-3
DH264FWKX	—	—	Fuse Base	70-7759-5 ①	70-7759-11	70-8305	70-7833-3
DH264UDK	—	—	Lower Base & Connector	70-7759-6 ②	70-7759-11	70-7833-4	70-7833-2
DH264UDK2	—	—	Lower Base & Connector	70-7759-6 ②	70-7759-11	70-7833-4	70-7833-2
DH265FDK	Switch Interior Assembly	70-8063-5	Fuse Base	70-8063-7	70-8063-8	70-7833-5	70-7833-2
DH265FDK3	Switch Interior Assembly	70-8063-5	Fuse Base	70-8063-7	70-8063-8	70-7833-5	70-7833-2
DH265FGK	Switch Interior Assembly	70-8063-5	Fuse Base	70-8063-7	70-8063-8	70-7833-5	70-7833-2
DH265UDK	Switch Interior Assembly	70-8063	—	—	70-8063-8	70-7833-5	70-7833-2
DH265UGK	Switch Interior Assembly	70-8063	—	—	70-8063-8	70-7833-5	70-7833-2
DH266FDK	Switch Interior Assembly	70-8064-5	Fuse Base	70-8064-7	70-8064-8	70-7833-6	70-7833-2
DH266FGK	Switch Interior Assembly	70-8064-5	Fuse Base	70-8064-7	70-8064-8	70-7833-6	70-7833-2
DH266UDK	Switch Interior Assembly	70-8064	—	—	70-8064-8	70-7833-6	70-7833-2
DH266UGK	Switch Interior Assembly	70-8064	—	—	70-8064-8	70-7833-6	70-7833-2
DH267FDK	Switch Interior Assembly	70-8065-5	Fuse Base	70-8065-7	70-8064-8	70-7833-6	70-7833-2
DH267FGK	Switch Interior Assembly	70-8065-5	Fuse Base	70-8065-7	70-8064-8	70-7833-6	70-7833-2
DH267UDK	Switch Interior Assembly	70-8065	—	—	70-8064-8	70-7833-6	70-7833-2
DH267UGK	Switch Interior Assembly	70-8065	—	—	70-8064-8	70-7833-6	70-7833-2
DH321FCK	Switching Base	70-7758-14	Fuse Base	70-7758-26	70-7758-34	—	—
DH321FDK	Switching Base	70-7758-14	Fuse Base	70-7758-26	70-7758-34	70-7813	70-7813-2
DH321FDK2JK	Switching Base	70-7831	Fuse Base	70-7831-3	70-7758-34	70-7813	70-7813-2
DH321FDK5	Switching Base	70-7758-14	Fuse Base	70-7758-26	70-7758-34	70-7813	70-7813-2
DH321FGK	Switching Base	70-7758-14	Fuse Base	70-7758-26	70-7758-34	70-7813	70-7813-2
DH321FGK2	Switching Base	70-7758-14	Fuse Base	70-7758-26	70-7758-34	70-7813	70-7813-2
DH321FGK2JK	Switching Base	70-7831	Fuse Base	70-7831-3	70-7758-34	70-7813	70-7813-2
DH321FRK	Switching Base	70-7758-14	Fuse Base	70-7758-26	70-7758-34	70-7813	70-7813-2
DH321FRK2JK	Switching Base	70-7831	Fuse Base	70-7831-3	70-7758-34	70-7813	70-7813-2
DH321FRK5	Switching Base	70-7758-14	Fuse Base	70-7758-26	70-7758-34	70-7813	70-7813-2
DH321FWK	Switching Base	70-7758-14	Fuse Base	70-7758-26	70-7758-34	70-7813	70-7813-3
DH321FWKX	Switching Base	70-7758-14	Fuse Base	70-7758-26	70-7758-34	70-8304	70-7813-3
DH321FWK2JK	Switching Base	70-7831	Fuse Base	70-7831-3	70-7758-34	70-7813	70-7813-3
DH321NCK	Switching Base	70-7758-14	Fuse Base	70-7758-26	70-7758-34	—	—

① Two used.
② Three used.

Catalog Number	Base or Assembly		Fuse Base and Lower Assembly		Line Shields	Operating Mechanism	Operating Handle
	Type	Part Number	Type	Part Number			
DH321NDK	Switching Base	70-7758-14	Fuse Base	70-7758-26	70-7758-34	70-7813	70-7813-2
DH321NDKLW	Switching Base	70-7758-14	Fuse Base	70-7758-26	70-7758-34	70-7813	70-7813-2
DH321NDKW	Switching Base	70-7758-14	Fuse Base	70-7758-26	70-7758-34	70-7813	70-7813-2
DH321NDK3	Switching Base	70-7758-14	Fuse Base	70-7758-26	70 7758-34	70-7813	70-7813-2
DH321NGK	Switching Base	70-7758-14	Fuse Base	70-7758-26	70 7758-34	70-7813	70-7813-2
DH321NRK	Switching Base	70-7758-14	Fuse Base	70-7758-26	70-7758-34	70-7813	70-7813-2
DH321NWK	Switching Base	70-7758-14	Fuse Base	70-7758-26	70-7758-34	70-7813	70-7813-3
DH321NWKLW	Switching Base	70-7758-14	Fuse Base	70-7758-26	70-7758-34	70-7813	70-7813-3
DH321NWKW	Switching Base	70-7758-14	Fuse Base	70-7758-26	70-7758-34	70-7813	70-7813-3
DH321NWKX	Switching Base	70-7758-14	Fuse Base	70-7758-26	70-7758-34	70-8304	70-7813-3
DH322FCK	Switching Base	70-7997	Fuse Base	70-7997-5	70-7758-34	—	—
DH322FDK	Switching Base	70-7997	Fuse Base	70-7997-5	70-7758-34	70-7813	70-7813-2
DH322FGK	Switching Base	70-7997	Fuse Base	70-7997-5	70-7758-34	70-7813	70-7813-2
DH322FRK	Switching Base	70-7997	Fuse Base	70-7997-5	70-7758-34	70-7813	70-7813-2
DH322FRK5	Switching Base	70-7997	Fuse Base	70-7997-5	70-7758-34	70-7813	70-7813-2
DH322FWK	Switching Base	70-7997	Fuse Base	70-7997-5	70-7758-34	70-7813	70-7813-3
DH322FWKX	Switching Base	70-7997	Fuse Base	70-7997-5	70-7758-34	70-8304	70-7813-3
DH322NCK	Switching Base	70-7997	Fuse Base	70-7997-5	70-7758-34	—	—
DH322NDK	Switching Base	70-7997	Fuse Base	70-7997-5	70-7758-34	70-7813	70-7813-2
DH322NDKLW	Switching Base	70-7997	Fuse Base	70-7997-5	70-7758-34	70-7813	70-7813-2
DH322NDKW	Switching Base	70-7997	Fuse Base	70-7997-5	70-7758-34	70-7813	70-7813-2
DH322NGK	Switching Base	70-7997	Fuse Base	70-7997-5	70-7758-34	70-7813	70-7813-2
DH322NRK	Switching Base	70-7997	Fuse Base	70-7997-5	70-7758-34	70-7813	70-7813-2
DH322NRK5	Switching Base	70-7997	Fuse Base	70-7997-5	70-7758-34	70-7813	70-7813-2
DH322NWK	Switching Base	70-7997	Fuse Base	70-7997-5	70-7758-34	70-7813	70-7813-3
DH322NWKLW	Switching Base	70-7997	Fuse Base	70-7997-5	70-7758-34	70-7813	70-7813-3
DH322NWKW	Switching Base	70-7997	Fuse Base	70-7997-5	70-7758-34	70-7813	70-7813-3
DH322NWKX	Switching Base	70-7997	Fuse Base	70-7997-5	70-7758-34	70-8304	70-7813-3
DH323FCK	Switching Base	70-7758-3	Fuse Base	70-7758-21	70-7758-35	—	—
DH323FDK	Switching Base	70-7758-3	Fuse Base	70-7758-21	70-7758-35	70-7813	70-7813-2
DH323FDK-10	Switching Base	70-7758-3	Fuse Base	70-7758-21	70-7758-35	70-7813	70-7813-2
DH323FD3WRK	Switching Base	70-7758-3	Fuse Base	70-7758-21	70-7758-35	70-7813	70-7813-2
DH323FGK	Switching Base	70-7758-3	Fuse Base	70-7758-21	70-7758-35	70-7813	70-7813-2
DH323FRK	Switching Base	70-7758-3	Fuse Base	70-7758-21	70-7758-35	70-7813	70-7813-2
DH323NCK	Switching Base	70-7758-3	Fuse Base	70-7758-21	70-7758-35	—	—
DH323NDK	Switching Base	70-7758-3	Fuse Base	70-7758-21	70-7758-35	70-7813	70-7813-2
DH323NDKLW	Switching Base	70-7758-3	Fuse Base	70-7758-21	70-7758-35	70-7813	70-7813-2
DH323NDKW	Switching Base	70-7758-3	Fuse Base	70-7758-21	70-7758-35	70-7813	70-7813-2
DH323NGK	Switching Base	70-7758-3	Fuse Base	70-7758-21	70-7758-35	70-7813	70-7813-2
DH323NGK2	Switching Base	70-7758-3	Fuse Base	70-7758-21	70-7758-35	70-7813	70-7813-2
DH323NRK	Switching Base	70-7758-3	Fuse Base	70-7758-21	70-7758-35	70-7813	70-7813-2
DH323NWK	Switching Base	70-7758-3	Fuse Base	70-7758-21	70-7758-35	70-7813	70-7813-3
DH323NWKLW	Switching Base	70-7758-3	Fuse Base	70-7758-21	70-7758-35	70-7813	70-7813-3
DH323NWKW	Switching Base	70-7758-3	Fuse Base	70-7758-21	70-7758-35	70-7813	70-7813-3
DH323NWKX	Switching Base	70-7758-3	Fuse Base	70-7758-21	70-7758-35	70-8304	70-7813-3
DH324FCK	Switching Base	70-8266	Fuse Base	70-8266-4 ②	70-7759-11	—	—
DH324FDK	Switching Base	70-7759	Fuse Base	70-7759-4 ②	70-7759-11	70-7833-4	70-7833-2
DH324FGK	Switching Base	70-8266	Fuse Base	70-8266-4 ②	70-7759-11	70-7833-4	70-7833-2
DH324FRK	Switching Base	70-8266	Fuse Base	70-8266-4 ②	70-7759-11	70-7833-4	70-7833-2
DH324FRK5	Switching Base	70-8266	Fuse Base	70-8266-4 ②	70-7759-11	70-7833-4	70-7833-2
DH324FWKX	Switching Base	70-7759	Fuse Base	70-7759-4 ②	70-7759-11	70-8305	70-7833-3
DH324NCK	Switching Base	70-8266	Fuse Base	70-8266-4 ②	70-7759-11	—	—
DH324NDK	Switching Base	70-7759	Fuse Base	70-7759-4 ②	70-7759-11	70-7833-4	70-7833-2
DH324NDKLW	Switching Base	70-7759	Fuse Base	70-7759-4 ②	70-7759-11	70-7833-4	70-7833-2
DH324NDKW	Switching Base	70-7759	Fuse Base	70-7759-4 ②	70-7759-11	70-7833-4	70-7833-2
DH324NDK5	Switching Base	70-7759	Fuse Base	70-7759-4 ②	70-7759-11	70-7833-4	70-7833-2
DH324NGK	Switching Base	70-8266	Fuse Base	70-8266-4 ②	70-7759-11	70-7833-4	70-7833-2
DH324NGK2	Switching Base	70-8266	Fuse Base	70-8266-4 ②	70-7759-11	70-7833-4	70-7833-2
DH324NRK	Switching Base	70-8266	Fuse Base	70-8266-4 ②	70-7759-11	70-7833-4	70-7833-2
DH324NRK5	Switching Base	70-8266	Fuse Base	70-8266-4 ②	70-7759-11	70-7833-4	70-7833-2
DH324NWK	Switching Base	70-7759	Fuse Base	70-7759-4 ②	70-7759-11	70-7833-4	70-7833-3
DH324NWKLW	Switching Base	70-7759	Fuse Base	70-7759-4 ②	70-7759-11	70-7833-4	70-7833-3
DH324NWKX	Switching Base	70-7759	Fuse Base	70-7759-4 ②	70-7759-11	70-8305	70-7833-3
DH325FDK	Switch Interior Assembly	70-8063-4	Fuse Base	70-8063-7	70-8063-8	70-7833-5	70-7833-2
DH325FGK	Switch Interior Assembly	70-8063-4	Fuse Base	70-8063-7	70-8063-8	70-7833-5	70-7833-2
DH325FPK	Switch Interior Assembly	70-8063-4	Fuse Base	70-8063-7	70-8063-8	70-7833-5	70-7833-2

② Three used.

Catalog Number	Base or Assembly		Fuse Base and Lower Assembly		Line Shields	Operating Mechanism	Operating Handle
	Type	Part Number	Type	Part Number			
DH325FRK	Switch Interior Assembly	70-8063-4	Fuse Base	70-8063-7	70-8063-8	70-7833-5	70-7833-2
DH325FWK	Switch Interior Assembly	70-8063-4	Fuse Base	70-8063-7	70-8063-8	70-7833-5	70-7833-3
DH325FWKX	Switch Interior Assembly	70-8063-4	Fuse Base	70-8063-7	70-8063-8	70-8305-2	70-7833-3
DH325NDK	Switch Interior Assembly	70-8063-4	Fuse Base	70-8063-7	70-8063-8	70-7833-5	70-7833-2
DH325NDKLW	Switch Interior Assembly	70-8063-4	Fuse Base	70-8063-7	70-8063-8	70-7833-5	70-7833-2
DH325NGK	Switch Interior Assembly	70-8063-4	Fuse Base	70-8063-7	70-8063-8	70-7833-5	70-7833-2
DH325NPK	Switch Interior Assembly	70-8063-4	Fuse Base	70-8063-7	70-8063-8	70-7833-5	70-7833-2
DH325NPKLW	Switch Interior Assembly	70-8063-4	Fuse Base	70-8063-7	70-8063-8	70-7833-5	70-7833-2
DH325NRK	Switch Interior Assembly	70-8063-4	Fuse Base	70-8063-7	70-8063-8	70-7833-5	70-7833-2
DH325NWK	Switch Interior Assembly	70-8063-4	Fuse Base	70-8063-7	70-8063-8	70-7833-5	70-7833-3
DH325NWKLW	Switch Interior Assembly	70-8063-4	Fuse Base	70-8063-7	70-8063-8	70-7833-5	70-7833-3
DH326FDK	Switch Interior Assembly	70-8064-4	Fuse Base	70-8064-7	70-8064-8	70-7833-6	70-7833-2
DH326FGK	Switch Interior Assembly	70-8064-4	Fuse Base	70-8064-7	70-8064-8	70-7833-6	70-7833-2
DH326FPK	Switch Interior Assembly	70-8064-4	Fuse Base	70-8064-7	70-8064-8	70-7833-6	70-7833-2
DH326FRK	Switch Interior Assembly	70-8064-4	Fuse Base	70-8064-7	70-8064-8	70-7833-6	70-7833-2
DH326FWK	Switch Interior Assembly	70-8064-4	Fuse Base	70-8064-7	70-8064-8	70-7833-6	70-7833-3
DH326NDK	Switch Interior Assembly	70-8064-4	Fuse Base	70-8064-7	70-8064-8	70-7833-6	70-7833-2
DH326NDKLW	Switch Interior Assembly	70-8064-4	Fuse Base	70-8064-7	70-8064-8	70-7833-6	70-7833-2
DH326NGK	Switch Interior Assembly	70-8064-4	Fuse Base	70-8064-7	70-8064-8	70-7833-6	70-7833-2
DH326NPK	Switch Interior Assembly	70-8064-4	Fuse Base	70-8064-7	70-8064-8	70-7833-6	70-7833-2
DH326NPKLW	Switch Interior Assembly	70-8064-4	Fuse Base	70-8064-7	70-8064-8	70-7833-6	70-7833-2
DH326NRK	Switch Interior Assembly	70-8064-4	Fuse Base	70-8064-7	70-8064-8	70-7833-6	70-7833-2
DH326NWK	Switch Interior Assembly	70-8064-4	Fuse Base	70-8064-7	70-8064-8	70-7833-6	70-7833-2
DH326NWKLW	Switch Interior Assembly	70-8064-4	Fuse Base	70-8064-7	70-8064-8	70-7833-6	70-7833-2
DH327FDK	Switch Interior Assembly	70-8065-4	Fuse Base	70-8065-7	70-8064-8	70-7833-6	70-7833-2
DH327FGK	Switch Interior Assembly	70-8065-4	Fuse Base	70-8065-7	70-8064-8	70-7833-6	70-7833-2
DH327FPK	Switch Interior Assembly	70-8065-4	Fuse Base	70-8065-7	70-8064-8	70-7833-6	70-7833-2
DH327FRK	Switch Interior Assembly	70-8065-4	Fuse Base	70-8065-7	70-8064-8	70-7833-6	70-7833-2
DH327FWK	Switch Interior Assembly	70-8065-4	Fuse Base	70-8065-7	70-8064-8	70-7833-6	70-7833-3
DH327NGK	Switch Interior Assembly	70-8065-4	Fuse Base	70-8065-7	70-8064-8	70-7833-6	70-7833-2
DH327NRK	Switch Interior Assembly	70-8065-4	Fuse Base	70-8065-7	70-8064-8	70-7833-6	70-7833-2
DH328FGK	Switch Interior Assembly	70-8453-2	Fuse Base	70-8453-3	70-8453-4	—	—
DH328FRK	Switch Interior Assembly	70-8453-2	Fuse Base	70-8453-3	70-8453-4	—	—
DH328NGK	Switch Interior Assembly	70-8453-2	Fuse Base	70-8453-3	70-8453-4	—	—
DH328NRK	Switch Interior Assembly	70-8453-2	Fuse Base	70-8453-3	70-8453-4	—	—
DH361FCK	Switching Base	70-7758-12	Fuse Base	70-7758-27	70-7758-34	—	—
DH361FDK	Switching Base	70-7758-12	Fuse Base	70-7758-27	70-7758-34	70-7813	70-7813-2
DH361FDK2	Switching Base	70-7758-12	Fuse Base	70-7758-27	70-7758-34	70-7813	70-7813-2
DH361FDK2WR	Switching Base	70-7758	Fuse Base	70-7758-19	70-7758-35	70-7813	70-7813-2
DH361FDK2WRK	Switching Base	70-7758	Fuse Base	70-7758-19	70-7758-35	70-7813	70-7813-2
DH361FDK2WRW	Switching Base	70-7758	Fuse Base	70-7758-19	70-7758-35	70-7813	70-7813-2
DH361FDK26	Switching Base	70-7758-12	Fuse Base	70-7758-27	70-7758-34	70-7813	70-7813-2
DH361FDK46	Switching Base	70-7758-12	Fuse Base	70-7758-27	70-7758-34	70-7813	70-7813-2
DH361FDK6	Switching Base	70-7758-12	Fuse Base	70-7758-27	70-7758-34	70-7813	70-7813-2
DH361FDK6JK	Switching Base	70-7831-2	Fuse Base	70-7831-3	70-7758-34	70-7813	70-7813-2
DH361FD3WRK	Switching Base	70-7758	Fuse Base	70-7758-19	70-7758-35	70-7813	70-7813-2
DH361FD4WRK	Switching Base	70-7758	Fuse Base	70-7758-19	70-7758-35	70-7813	70-7813-2
DH361FD5WRK	Switching Base	70-7758-14	Fuse Base	70-7758-26	70-7758-34	70-7813	70-7813-2
DH361FGK	Switching Base	70-7758-12	Fuse Base	70-7758-27	70-7758-34	70-7813	70-7813-2
DH361FGK6	Switching Base	70-7758-12	Fuse Base	70-7758-27	70-7758-34	70-7813	70-7813-2
DH361FGK6JK	Switching Base	70-7831-2	Fuse Base	70-7831-3	70 7758-34	70-7813	70-7813-2
DH361FG6WRK	Switching Base	70-7758-2	Fuse Base	70-7758-19	70-7758-35	70-7813	70-7813-2
DH361FRK	Switching Base	70-7758-15	Fuse Base	70-7758-28	70-7758-34	70-7813	70-7813-2
DH361FRK6	Switching Base	70-7758-15	Fuse Base	70-7758-28	70-7758-34	70-7813	70-7813-2
DH361FRK6JK	Switching Base	70-7831-2	Fuse Base	70-7831-3	70-7758-34	70-7813	70-7813-2
DH361FWK	Switching Base	70-7758-12	Fuse Base	70-7758-27	70-7758-34	70-7813	70-7813-3
DH361FWK-316	Switching Base	70-7758-12	Fuse Base	70-7758-27	70-7758-34	70-7813	70-7813-3
DH361FWKX	Switching Base	70-7758-12	Fuse Base	70-7758-27	70-7758-34	70-8304	70-7813-3
DH361FWK2	Switching Base	70-7758-12	Fuse Base	70-7758-27	70-7758-34	70-7813	70-7813-3
DH361FWK2WR	Switching Base	70-7758	Fuse Base	70-7758-19	70-7758-35	70-7813	70-7813-3
DH361FWK26	Switching Base	70-7758-12	Fuse Base	70-7758-27	70-7758-34	70-7813	70-7813-3
DH361FWK6	Switching Base	70-7758-12	Fuse Base	70-7758-27	70-7758-34	70-7813	70-7813-3
DH361FWK6JK	Switching Base	70-7831-2	Fuse Base	70-7831-3	70-7758-34	70-7813	70-7813-3
DH361NCK	Switching Base	70-7758-12	Fuse Base	70-7758-27	70-7758-34	—	—
DH361NDK	Switching Base	70-7758-12	Fuse Base	70-7758-27	70-7758-34	70-7813	70-7813-2
DH361NDK-10	Switching Base	70-7758-12	Fuse Base	70-7758-27	—	70-7813	70-7813-2

Catalog Number	Base or Assembly		Fuse Base and Lower Assembly		Line Shields	Operating Mechanism	Operating Handle
	Type	Part Number	Type	Part Number			
DH361NDKLW	Switching Base	70-7758-12	Fuse Base	70-7758-27	70-7758-34	70-7813	70-7813-2
DH361NDKW	Switching Base	70-7758-12	Fuse Base	70-7758-27	70-7758-34	70-7813	70-7813-2
DH361NDK6JK	Switching Base	70-7831-2	Fuse Base	70-7831-3	70-7758-34	70-7813	70-7813-2
DH361NGK	Switching Base	70-7758-12	Fuse Base	70-7758-27	70-7758-34	70-7813	70-7813-2
DH361NRK	Switching Base	70-7758-12	Fuse Base	70-7758-28	70 7758-34	70-7813	70-7813-2
DH361NWK	Switching Base	70-7758-12	Fuse Base	70-7758-27	70-7758-34	70-7813	70-7813-3
DH361NWKLW	Switching Base	70-7758-12	Fuse Base	70-7758-27	70-7758-34	70-7813	70-7813-3
DH361NWKW	Switching Base	70-7758-12	Fuse Base	70-7758-27	70-7758-34	70-7813	70-7813-3
DH361NWKW2	Switching Base	70-7758-12	Fuse Base	70-7758-27	70-7758-34	70-7813	70-7813-3
DH361NWKX	Switching Base	70-7758-12	Fuse Base	70-7758-27	70-7758-34	70-8304	70-7813-3
DH361UCK	Switching Base	70-7758-13	—	—	70-7758-34	—	—
DH361UDK-CPG	Switching Base	70-7758-13	—	—	70-7758-34	70-7813	70-7813-2
DH361UDK-LS	Switching Base	70-7758-13	—	—	70-7758-34	70-7813	70-7813-2
DH361UDK2-LS	Switching Base	70-7758-13	—	—	70-7758-34	70-7813	70-7813-2
DH361UD5WRK	Switching Base	70-7758-13	—	—	70-7758-34	70-7813	70-7813-2
DH361UGK	Switching Base	70-7758-13	—	—	70-7758-34	70 7813	70-7813-2
DH361UGK-CSA	Switching Base	70-7758-13	—	—	70-7758-34	70 7813	70-7813-2
DH361UGK2	Switching Base	70-7758-13	—	—	70-7758-34	70 7813	70-7813-2
DH361UGK3	Switching Base	70-7758-13	—	—	70-7758-34	70 7813	70-7813-2
DH361URK	Switching Base	70-7758-13	—	—	70-7758-34	70-7813	70-7813-2
DH361URK-CSA	Switching Base	70-7758-13	—	—	70-7758-34	70-7813	70-7813-2
DH361URK-NP-FP	Switching Base	70-7758-13	—	—	70-7758-34	70-7813	70-7813-2
DH361URK2	Switching Base	70-7758-13	—	—	70-7758-34	70-7813	70-7813-2
DH361URK3	Switching Base	70-7758-13	—	—	70-7758-34	70-7813	70-7813-2
DH361UWK	Switching Base	70-7758-13	—	—	70-7758-34	70-7813	70-7813-3
DH361UWK-CPG	Switching Base	70-7758-13	—	—	70-7758-34	70-7813	70-7813-3
DH361UWK-LS	Switching Base	70-7758-13	—	—	70-7758-34	70-7813	70-7813-3
DH361UWKW	Switching Base	70-7758-13	—	—	70-7758-34	70-7813	70-7813-3
DH361UWKW2	Switching Base	70-7758-13	—	—	70-7758-34	70-7813	70-7813-3
DH362FCK	Switching Base	70-7997-2	Fuse Base	70-7997-7	70-7758-34	—	—
DH362FDK	Switching Base	70-7997-2	Fuse Base	70-7997-7	70-7758-34	70-7813	70-7813-2
DH362FDK2	Switching Base	70-7997-2	Fuse Base	70-7997-7	70 7758-34	70-7813	70-7813-2
DH362FDK2WR	Switching Base	70-7758-2	Fuse Base	70-7758-20	70-7758-35	70-7813	70-7813-2
DH362FDK2WR-SP	Switching Base	70-7758-2	Fuse Base	70-7758-20	70-7758-35	70-7813	70-7813-2
DH362FDK2WRW	Switching Base	70-7758-2	Fuse Base	70-7758-20	70-7758-35	70-7813	70-7813-2
DH362FDK26	Switching Base	70-7997-2	Fuse Base	70-7997-7	70 7758-34	70-7813	70-7813-2
DH362FDK3	Switching Base	70-7997-2	Fuse Base	70-7997-7	70 7758-34	70-7813	70-7813-2
DH362FDK6	Switching Base	70-7997-2	Fuse Base	70-7997-7	70-7758-34	70-7813	70-7813-2
DH362FD3WRK	Switching Base	70-7758-2	Fuse Base	70-7758-20	70-7758-35	70-7813	70-7813-2
DH362FD4WRK	Switching Base	70-7758-2	Fuse Base	70-7758-20	70-7758-35	70-7813	70-7813-2
DH362FD5WRK	Switching Base	70-7758-2	Fuse Base	70-7758-20	70-7758-35	70-7813	70-7813-2
DH362FGK	Switching Base	70-7997-2	Fuse Base	70-7997-7	70-7758-34	70-7813	70-7813-2
DH362FGK6	Switching Base	70-7997-2	Fuse Base	70-7997-7	70-7758-34	70-7813	70-7813-2
DH362FGK6JK	Switching Base	70-7997-2	Fuse Base	70-7997-7	70-7758-34	70-7813	70-7813-2
DH362FG6WRK	Switching Base	70-7758-2	Fuse Base	70-7758-20	70-7758-35	70-7813	70-7813-2
DH362FRK	Switching Base	70-7997-2	Fuse Base	70-7997-7	70-7758-34	70-7813	70-7813-2
DH362FRK6	Switching Base	70-7997-2	Fuse Base	70-7997-7	70-7758-34	70-7813	70-7813-2
DH362FWK	Switching Base	70-7997-2	Fuse Base	70-7997-7	70-7758-34	70-7813	70-7813-3
DH362FWKX	Switching Base	70-7997-2	Fuse Base	70-7997-7	70-7758-34	70-8304	70-7813-3
DH362FWK2WR	Switching Base	70-7758-2	Fuse Base	70-7758-20	70-7758-35	70-7813	70-7813-3
DH362FWK26	Switching Base	70-7997-2	Fuse Base	70-7997-7	70-7758-34	70-7813	70-7813-3
DH362FW5WRK	Switching Base	70-7758-2	Fuse Base	70-7758-20	70-7758-35	70-7813	70-7813-3
DH362NCK	Switching Base	70-7997-2	Fuse Base	70-7997-7	70-7758-34	—	—
DH362NDK	Switching Base	70-7997-2	Fuse Base	70-7997-7	70-7758-34	70-7813	70-7813-2
DH362NDKLW	Switching Base	70-7997-2	Fuse Base	70-7997-7	70-7758-34	70-7813	70-7813-2
DH362NDKW	Switching Base	70-7997-2	Fuse Base	70-7997-7	70-7758-34	70-7813	70-7813-2
DH362NDK36	Switching Base	70-7997-2	Fuse Base	70-7997-7	70-7758-34	70-7813	70-7813-2
DH362NDK6	Switching Base	70-7997-2	Fuse Base	70-7997-7	70-7758-34	70-7813	70-7813-2
DH362NGK	Switching Base	70-7997-2	Fuse Base	70-7997-7	70-7758-34	70-7813	70-7813-2
DH362NGK6	Switching Base	70-7997-2	Fuse Base	70-7997-7	70-7758-34	70-7813	70-7813-2
DH362NRK	Switching Base	70-7997-2	Fuse Base	70-7997-7	70-7758-34	70-7813	70-7813-2
DH362NWK	Switching Base	70-7997-2	Fuse Base	70-7997-7	70-7758-34	70-7813	70-7813-3
DH362NWKLW	Switching Base	70-7997-2	Fuse Base	70-7997-7	70-7758-34	70-7813	70-7813-3
DH362NWKW	Switching Base	70-7997-2	Fuse Base	70-7997-7	70-7758-34	70-7813	70-7813-3
DH362NWKW2	Switching Base	70-7997-2	Fuse Base	70-7997-7	70-7758-34	70-7813	70-7813-3
DH362NWKX	Switching Base	70-7997-2	Fuse Base	70-7997-7	70-7758-34	70-8304	70-7813-3

Catalog Number	Base or Assembly		Fuse Base and Lower Assembly		Line Shields	Operating Mechanism	Operating Handle
	Type	Part Number	Type	Part Number			
DH362UCK	Switching Base	70-7758-13	—	—	70-7758-34	—	—
DH362UDK-CPG	Switching Base	70-7758-13	—	—	70-7758-34	70-7813	70-7813-2
DH362UDK-LS	Switching Base	70-7758-13	—	—	70-7758-34	70-7813	70-7813-2
DH362UDK2-LS	Switching Base	70-7758-13	—	—	70-7758-34	70-7813	70-7813-2
DH362UDK2WR	Switching Base	70-7758-4	—	—	70-7758-35	70-7813	70-7813-2
DH362UDK2WRCP10	Switching Base	70-7758-4	—	—	70-7758-35	70-7813	70-7813-2
DH362UD5WRK	Switching Base	70-7758-4	—	—	70-7758-35	70-7813	70-7813-2
DH362UGK	Switching Base	70-7758-13	—	—	70-7758-34	70-7813	70-7813-2
DH362UGK-CSA	Switching Base	70-7758-13	—	—	70-7758-34	70-7813	70-7813-2
DH362UGK2	Switching Base	70-7758-13	—	—	70-7758-34	70-7813	70-7813-2
DH362UGK3	Switching Base	70-7758-13	—	—	70-7758-34	70-7813	70-7813-2
DH362URK	Switching Base	70-7758-13	—	—	70-7758-34	70-7813	70-7813-2
DH362URK-CSA	Switching Base	70-7758-13	—	—	70-7758-34	70-7813	70-7813-2
DH362URK-NP-FP	Switching Base	70-7758-13	—	—	70-7758-34	70-7813	70-7813-2
DH362URK2	Switching Base	70-7758-13	—	—	70-7758-34	70-7813	70-7813-2
DH362URK3	Switching Base	70-7758-13	—	—	70-7758-34	70-7813	70-7813-2
DH362UWK	Switching Base	70-7758-13	—	—	70-7758-34	70-7813	70-7813-3
DH362UWK-CPG	Switching Base	70-7758-4	—	—	70-7758-35	70-7813	70-7813-3
DH362UWK-LS	Switching Base	70-7758-4	—	—	70-7758-35	70-7813	70-7813-3
DH362UWKW	Switching Base	70-7758-4	—	—	70-7758-35	70-7813	70-7813-3
DH362UWKW2	Switching Base	70-7758-4	—	—	70-7758-35	70-7813	70-7813-3
DH362UWK2WR	Switching Base	70-7758-4	—	—	70-7758-35	70-7813	70-7813-2
DH362UW5WRK	Switching Base	70-7758-4	—	—	70-7758-35	70-7813	70-7813-3
DH363FCK	Switching Base	70-7758-3	Fuse Base	70-7758-21	70-7758-35	—	—
DH363FDK	Switching Base	70-7758-3	Fuse Base	70-7758-21	70-7758-35	70-7813	70-7813-2
DH363FDK2	Switching Base	70-7758-3	Fuse Base	70-7758-21	70-7758-35	70-7813	70-7813-2
DH363FDK2WR	Switching Base	70-7758-3	Fuse Base	70-7758-21	70-7758-35	70-7813	70-7813-2
DH363FDK26	Switching Base	70-7758-3	Fuse Base	70-7758-21	70-7758-35	70-7813	70-7813-2
DH363FDK6	Switching Base	70-7758-3	Fuse Base	70-7758-21	70-7758-35	70-7813	70-7813-2
DH363FD3WRK	Switching Base	70-7758-3	Fuse Base	70-7758-21	70-7758-35	70-7813	70-7813-2
DH363FD3WRK-EXC	Switching Base	70-7758-3	Fuse Base	70-7758-21	70-7758-35	70-7813	70-7813-2
DH363FD4WRK	Switching Base	70-7758-3	Fuse Base	70-7758-21	70-7758-35	70-7813	70-7813-2
DH363FGK	Switching Base	70-7758-3	Fuse Base	70-7758-21	70-7758-35	70-7813	70-7813-2
DH363FGK6	Switching Base	70-7758-3	Fuse Base	70-7758-21	70-7758-35	70-7813	70-7813-2
DH363FRK	Switching Base	70-7758-3	Fuse Base	70-7758-21	70-7758-35	70-7813	70-7813-2
DH363FRK-HRC	Switching Base	70-7758-3	Fuse Base	70-7758-21	70-7758-35	70-7813	70-7813-2
DH363FRK6	Switching Base	70-7758-3	Fuse Base	70-7758-21	70-7758-35	70-7813	70-7813-2
DH363FWK	Switching Base	70-7758-3	Fuse Base	70-7758-21	70-7758-35	70-7813	70-7813-3
DH363FWKX	Switching Base	70-7758-3	Fuse Base	70-7758-21	70-7758-35	70-8304	70-7813-3
DH363FWK26	Switching Base	70-7758-3	Fuse Base	70-7758-21	70-7758-35	70-7813	70-7813-3
DH363FW5WRK	Switching Base	70-7758-3	Fuse Base	70-7758-21	70-7758-35	70-7813	70-7813-3
DH363NCK	Switching Base	70-7758-3	Fuse Base	70-7758-21	70-7758-35	—	—
DH363NDK	Switching Base	70-7758-3	Fuse Base	70-7758-21	70-7758-35	70-7813	70-7813-2
DH363NDKLW	Switching Base	70-7758-3	Fuse Base	70-7758-21	70-7758-35	70-7813	70-7813-2
DH363NDKW	Switching Base	70-7758-3	Fuse Base	70-7758-21	70-7758-35	70-7813	70-7813-2
DH363NDK6	Switching Base	70-7758-3	Fuse Base	70-7758-21	70-7758-35	70-7813	70-7813-2
DH363NGK	Switching Base	70-7758-3	Fuse Base	70-7758-21	70-7758-35	70-7813	70-7813-2
DH363NGK6	Switching Base	70-7758-3	Fuse Base	70-7758-21	70-7758-35	70-7813	70-7813-2
DH363NRK	Switching Base	70-7758-3	Fuse Base	70-7758-21	70-7758-35	70-7813	70-7813-2
DH363NWK	Switching Base	70-7758-3	Fuse Base	70-7758-21	70-7758-35	70-7813	70-7813-3
DH363NWKLW	Switching Base	70-7758-3	Fuse Base	70-7758-21	70-7758-35	70-7813	70-7813-3
DH363NWKW	Switching Base	70-7758-3	Fuse Base	70-7758-21	70-7758-35	70-7813	70-7813-3
DH363NWKW2	Switching Base	70-7758-3	Fuse Base	70-7758-21	70-7758-35	70-7813	70-7813-3
DH363NWKX	Switching Base	70-7758-3	Fuse Base	70-7758-21	70-7758-35	70-8304	70-7813-3
DH363UCK	Switching Base	70-7758-5	—	—	70-7758-35	—	—
DH363UDK	Switching Base	70-7758-5	—	—	70-7758-35	70-7813	70-7813-2
DH363UDK-CP	Switching Base	70-7758-5	—	—	70-7758-35	70-7813	70-7813-2
DH363UDK-NP-FP	Switching Base	70-7758-5	—	—	70-7758-35	70-7813	70-7813-2
DH363UDK-10	Switching Base	70-7758-5	—	—	—	70-7813	70-7813-2
DH363UDKW	Switching Base	70-7758-5	—	—	70-7758-35	70-7813	70-7813-2
DH363UDKW2	Switching Base	70-7758-5	—	—	70-7758-35	70-7813	70-7813-2
DH363UDK2	Switching Base	70-7758-5	—	—	70-7758-35	70-7813	70-7813-2
DH363UDK3	Switching Base	70-7758-5	—	—	70-7758-35	70-7813	70-7813-2
DH363UGK	Switching Base	70-7758-5	—	—	70-7758-35	70-7813	70-7813-2
DH363UGK2	Switching Base	70-7758-5	—	—	70-7758-35	70-7813	70-7813-2

Catalog Number	Base or Assembly		Fuse Base and Lower Assembly		Line Shields	Operating Mechanism	Operating Handle
	Type	Part Number	Type	Part Number			
DH363URK	Switching Base	70-7758-5	—	—	70-7758-35	70-7813	70-7813-2
DH363URK-NP-FP	Switching Base	70-7758-5	—	—	70-7758-35	70-7813	70-7813-2
DH363URK2	Switching Base	70-7758-5	—	—	70-7758-35	70-7813	70-7813-2
DH363URK3	Switching Base	70-7758-5	—	—	70-7758-35	70-7813	70-7813-2
DH363UWK	Switching Base	70-7758-5	—	—	70-7758-35	70-7813	70-7813-3
DH363UWK-316	Switching Base	70-7758-5	—	—	70-7758-35	70-7813	70-7813-3
DH363UWKW	Switching Base	70-7758-5	—	—	70-7758-35	70-7813	70-7813-3
DH363UWKW2	Switching Base	70-7758-5	—	—	70-7758-35	70-7813	70-7813-3
DH363UWKX	Switching Base	70-7758-5	—	—	70-7758-35	70-8304	70-7813-3
DH363UWK2	Switching Base	70-7758-5	—	—	70-7758-35	70-7813	70-7813-3
DH363UWK3	Switching Base	70-7758-5	—	—	70-7758-35	70-7813	70-7813-3
DH363UWK34	Switching Base	70-7758-5	—	—	70-7758-35	70-7813	70-7813-3
DH364FCK	Switching Base	70-8266	Fuse Base	70-8266-4	70-7759-11	—	—
DH364FDK	Switching Base	70-7759	Fuse Base	70-7759-5	70-7759-11	70-7833-4	70-7833-2
DH364FDK2	Switching Base	70-7759	Fuse Base	70-7759-5	70-7759-11	70-7833-4	70-7833-2
DH364FDK26	Switching Base	70-7759	Fuse Base	70-7759-5	70-7759-11	70-7833-4	70-7833-2
DH364FDK6	Switching Base	70-7759	Fuse Base	70-7759-5	70-7759-11	70-7833-4	70-7833-2
DH364FGK	Switching Base	70-8266	Fuse Base	70-8266-4	70-7759-11	70-7833-4	70-7833-2
DH364FGK6	Switching Base	70-8266	Fuse Base	70-8266-4	70-7759-11	70-7833-4	70-7833-2
DH364FRK	Switching Base	70-8266	Fuse Base	70-8266-4	70-7759-11	70-7833-4	70-7833-2
DH364FRK6	Switching Base	70-8266	Fuse Base	70-8266-4	70-7759-11	70-7833-4	70-7833-2
DH364FWK	Switching Base	70-7759	Fuse Base	70-7759-5	70-7759-11	70-7833-4	70-7833-3
DH364FWKX	Switching Base	70-7759	Fuse Base	70-7759-5	70-7759-11	70-8305	70-7833-3
DH364FWK26	Switching Base	70-7759	Fuse Base	70-7759-5	70-7759-11	70-7833-4	70-7833-3
DH364NCK	Switching Base	70-8266	Fuse Base	70-8266-4	70-7759-11	—	—
DH364NDK	Switching Base	70-7759	Fuse Base	70-7759-5	70-7759-11	70-7833-4	70-7833-2
DH364NDKLW	Switching Base	70-7759	Fuse Base	70-7759-5	70-7759-11	70-7833-4	70-7833-2
DH364NDKW	Switching Base	70-7759	Fuse Base	70-7759-5	70-7759-11	70-7833-4	70-7833-2
DH364NGK	Switching Base	70-8266	Fuse Base	70-8266-4	70-7759-11	70-7833-4	70-7833-2
DH364NGK6	Switching Base	70-8266	Fuse Base	70-8266-4	70-7759-11	70-7833-4	70-7833-2
DH364NRK	Switching Base	70-8266	Fuse Base	70-8266-4	70-7759-11	70-7833-4	70-7833-2
DH364NWK	Switching Base	70-7759	Fuse Base	70-7759-5	70-7759-11	70-7833-4	70-7833-3
DH364NWKLW	Switching Base	70-7759	Fuse Base	70-7759-5	70-7759-11	70-7833-4	70-7833-3
DH364NWKW	Switching Base	70-7759	Fuse Base	70-7759-5	70-7759-11	70-7833-4	70-7833-3
DH364NWKX	Switching Base	70-7759	Fuse Base	70-7759-5	70-7759-11	70-8305	70-7833-3
DH364UCK	Switching Base	70-8266-2	—	—	70-7759-11	—	—
DH364UDK	Switching Base	70-7759-2	Lower Base & Connector	70-7759-6 ②	70-7759-11	70-7833-4	70-7833-2
DH364UDK-CP	Switching Base	70-7759-2	Lower Base & Connector	70-7759-6 ②	70-7759-11	70-7833-4	70-7833-2
DH364UDK-NP-FP	Switching Base	70-7759-2	Lower Base & Connector	70-7759-6 ②	70-7759-11	70-7833-4	70-7833-2
DH364UDK-10	Switching Base	70-7759-2	Lower Base & Connector	70-7759-6 ②	70-7759-11	70-7833-4	70-7833-2
DH364UDKW	Switching Base	70-7759-2	Lower Base & Connector	70-7759-6 ②	70-7759-11	70-7833-4	70-7833-2
DH364UDK2	Switching Base	70-7759-2	Lower Base & Connector	70-7759-6 ②	70-7759-11	70-7833-4	70-7833-2
DH364UGK	Switching Base	70-8266-2	—	—	70-7759-11	70-7833-4	70-7833-2
DH364UGK2	Switching Base	70-8266-2	—	—	70-7759-11	70-7833-4	70-7833-2
DH364UGK3	Switching Base	70-8266-2	—	—	70-7759-11	70-7833-4	70-7833-2
DH364URK	Switching Base	70-8266-2	—	—	70-7759-11	70-7833-4	70-7833-2
DH364URK-H	Switching Base	70-7759-2	Lower Base & Connector	70-7759-6 ②	70-7759-11	70-7833-4	70-7833-2
DH364URK2	Switching Base	70-8266-2	—	—	70-7759-11	70-7833-4	70-7833-2
DH364UWK	Switching Base	70-7759-2	Lower Base & Connector	70-7759-6 ②	70-7759-11	70-7833-4	70-7833-3
DH364UWK-316	Switching Base	70-7759-2	Lower Base & Connector	70-7759-6 ②	70-7759-11	70-7833-4	70-7833-3
DH364UWKW	Switching Base	70-7759-2	Lower Base & Connector	70-7759-6 ②	70-7759-11	70-7833-4	70-7833-3
DH364UWKX	Switching Base	70-7759-2	Lower Base & Connector	70-7759-6 ②	70-7759-11	70-8305	70-7833-3
DH364UWK2	Switching Base	70-7759-2	Lower Base & Connector	70-7759-6 ②	70-7759-11	70-7833-4	70-7833-3
DH365FDK	Switch Interior Assembly	70-8063-6	Fuse Base	70-8063-7	70-8063-8	70-7833-5	70-7833-2
DH365FGK	Switch Interior Assembly	70-8063-6	Fuse Base	70-8063-7	70-8063-8	70-7833-5	70-7833-2
DH365FGK6	Switch Interior Assembly	70-8063-6	Fuse Base	70-8063-7	70-8063-8	70-7833-5	70-7833-2
DH365FPK	Switch Interior Assembly	70-8063-6	Fuse Base	70-8063-7	70-8063-8	70-7833-5	70-7833-2
DH365FRK	Switch Interior Assembly	70-8063-6	Fuse Base	70-8063-7	70-8063-8	70-7833-5	70-7833-2
DH365FWK	Switch Interior Assembly	70-8063-6	Fuse Base	70-8063-7	70-8063-8	70-7833-5	70-7833-3
DH365FWKX	Switch Interior Assembly	70-8063-6	Fuse Base	70-8063-7	70-8063-8	70-8305-2	70-7833-3
DH365NDK	Switch Interior Assembly	70-8063-6	Fuse Base	70-8063-7	70-8063-8	70-7833-5	70-7833-2
DH365NDKLW	Switch Interior Assembly	70-8063-6	Fuse Base	70-8063-7	70-8063-8	70-7833-5	70-7833-2
DH365NDKW	Switch Interior Assembly	70-8063-6	Fuse Base	70-8063-7	70-8063-8	70-7833-5	70-7833-2
DH365NGK	Switch Interior Assembly	70-8063-6	Fuse Base	70-8063-7	70-8063-8	70-7833-5	70-7833-2
DH365NPK	Switch Interior Assembly	70-8063-6	Fuse Base	70-8063-7	70-8063-8	70-7833-5	70-7833-2
DH365NPKLW	Switch Interior Assembly	70-8063-6	Fuse Base	70-8063-7	70-8063-8	70-7833-5	70-7833-2

② Three used.

Catalog Number	Base or Assembly		Fuse Base and Lower Assembly		Line Shields	Operating Mechanism	Operating Handle
	Type	Part Number	Type	Part Number			
DH365NRK	Switch Interior Assembly	70-8063-6	Fuse Base	70-8063-7	70-8063-8	70-7833-5	70-7833-2
DH365NWK	Switch Interior Assembly	70-8063-6	Fuse Base	70-8063-7	70-8063-8	70-7833-5	70-7833-2
DH365NWKLW	Switch Interior Assembly	70-8063-6	Fuse Base	70-8063-7	70-8063-8	70-7833-5	70-7833-2
DH365UDK	Switch Interior Assembly	70-8063-2	—	—	70-8063-8	70-7833-5	70-7833-2
DH365UDK-CP	Switch Interior Assembly	70-8063-2	—	—	70-8063-8	70-7833-5	70-7833-2
DH365UDKW	Switch Interior Assembly	70-8063-2	—	—	70-8063-8	70-7833-5	70-7833-2
DH365UDK2	Switch Interior Assembly	70-8063-2	—	—	70-8063-8	70-7833-5	70-7833-2
DH365UGK	Switch Interior Assembly	70-8063-2	—	—	70-8063-8	70-7833-5	70-7833-2
DH365UPK	Switch Interior Assembly	70-8063-2	—	—	70-8063-8	70-7833-5	70-7833-2
DH365UPKW	Switch Interior Assembly	70-8063-2	—	—	70-8063-8	70-7833-5	70-7833-2
DH365URK	Switch Interior Assembly	70-8063-2	—	—	70-8063-8	70-7833-5	70-7833-2
DH365URK-NP-FP	Switch Interior Assembly	70-8063-2	—	—	70-8063-8	70-7833-5	70-7833-2
DH365URK2	Switch Interior Assembly	70-8063-2	—	—	70-8063-8	70-7833-5	70-7833-2
DH365UWK	Switch Interior Assembly	70-8063-2	—	—	70-8063-8	70-7833-5	70-7833-3
DH365UWKW	Switch Interior Assembly	70-8063-2	—	—	70-8063-8	70-7833-5	70-7833-3
DH365UWKX	Switch Interior Assembly	70-8063-2	—	—	70-8063-8	70-8305-2	70-7833-3
DH366FDK	Switch Interior Assembly	70-8064-6	Fuse Base	70-8064-7	70-8064-8	70-7833-6	70-7833-2
DH366FGK	Switch Interior Assembly	70-8064-6	Fuse Base	70-8064-7	70-8064-8	70-7833-6	70-7833-2
DH366FGK-EXC	Switch Interior Assembly	70-8064-6	Fuse Base	70-8064-7	70-8064-8	70-7833-6	70-7833-2
DH366FPK	Switch Interior Assembly	70-8064-6	Fuse Base	70-8064-7	70-8064-8	70-7833-6	70-7833-2
DH366FRK	Switch Interior Assembly	70-8064-6	Fuse Base	70-8064-7	70-8064-8	70-7833-6	70-7833-2
DH366FWK	Switch Interior Assembly	70-8064-6	Fuse Base	70-8064-7	70-8064-8	70-7833-6	70-7833-3
DH366NDK	Switch Interior Assembly	70-8064-6	Fuse Base	70-8064-7	70-8064-8	70-7833-6	70-7833-2
DH366NDKLW	Switch Interior Assembly	70-8064-6	Fuse Base	70-8064-7	70-8064-8	70-7833-6	70-7833-2
DH366NGK	Switch Interior Assembly	70-8064-6	Fuse Base	70-8064-7	70-8064-8	70-7833-6	70-7833-2
DH366NPK	Switch Interior Assembly	70-8064-6	Fuse Base	70-8064-7	70-8064-8	70-7833-6	70-7833-2
DH366NPKLW	Switch Interior Assembly	70-8064-6	Fuse Base	70-8064-7	70-8064-8	70-7833-6	70-7833-2
DH366NRK	Switch Interior Assembly	70-8064-6	Fuse Base	70-8064-7	70-8064-8	70-7833-6	70-7833-2
DH366NWK	Switch Interior Assembly	70-8064-6	Fuse Base	70-8064-7	70-8064-8	70-7833-6	70-7833-3
DH366NWKLW	Switch Interior Assembly	70-8064-6	Fuse Base	70-8064-7	70-8064-8	70-7833-6	70-7833-2
DH366UDK	Switch Interior Assembly	70-8064-2	—	—	70-8064-8	70-7833-6	70-7833-2
DH366UDKW	Switch Interior Assembly	70-8064-2	—	—	70-8064-8	70-7833-6	70-7833-2
DH366UDK2	Switch Interior Assembly	70-8064-2	—	—	70-8064-8	70-7833-6	70-7833-2
DH366UGK	Switch Interior Assembly	70-8064-2	—	—	70-8064-8	70-7833-6	70-7833-2
DH366UPK	Switch Interior Assembly	70-8064-2	—	—	70-8064-8	70-7833-6	70-7833-2
DH366URK	Switch Interior Assembly	70-8064-2	—	—	70-8064-8	70-7833-6	70-7833-2
DH366UWK	Switch Interior Assembly	70-8064-2	—	—	70-8064-8	70-7833-6	70-7833-3
DH366UWKW	Switch Interior Assembly	70-8064-2	—	—	70-8064-8	70-7833-6	70-7833-3
DH367FDK	Switch Interior Assembly	70-8065-6	Fuse Base	70-8065-7	70-8064-8	70-7833-6	70-7833-2
DH367FGK	Switch Interior Assembly	70-8065-6	Fuse Base	70-8065-7	70-8064-8	70-7833-6	70-7833-2
DH367FPK	Switch Interior Assembly	70-8065-6	Fuse Base	70-8065-7	70-8064-8	70-7833-6	70-7833-2
DH367FRK	Switch Interior Assembly	70-8065-6	Fuse Base	70-8065-7	70-8064-8	70-7833-6	70-7833-2
DH367FWK	Switch Interior Assembly	70-8065-6	Fuse Base	70-8065-7	70-8064-8	70-7833-6	70-7833-3
DH367NGK	Switch Interior Assembly	70-8065-6	Fuse Base	70-8065-7	70-8064-8	70-7833-6	70-7833-2
DH367NGK-NKO	Switch Interior Assembly	70-8065-6	Fuse Base	70-8065-7	70-8064-8	70-7833-6	70-7833-2
DH367NRK	Switch Interior Assembly	70-8065-6	Fuse Base	70-8065-7	70-8064-8	70-7833-6	70-7833-2
DH367UDK	Switch Interior Assembly	70-8065-2	—	—	70-8064-8	70-7833-6	70-7833-2
DH367UGK	Switch Interior Assembly	70-8065-2	—	—	70-8064-8	70-7833-6	70-7833-2
DH367UPK	Switch Interior Assembly	70-8065-2	—	—	70-8064-8	70-7833-6	70-7833-2
DH367URK	Switch Interior Assembly	70-8065-2	—	—	70-8064-8	70-7833-6	70-7833-2
DH367UWK	Switch Interior Assembly	70-8065-2	—	—	70-8064-8	70-7833-6	70-7833-3
DH368FGK	Switch Interior Assembly	70-8065-2	Fuse Base	70-8453-3	70-8453-4	—	—
DH368FRK	Switch Interior Assembly	70-8065-2	Fuse Base	70-8453-3	70-8453-4	—	—
DH368NGK	Switch Interior Assembly	70-8065-2	Fuse Base	70-8453-3	70-8453-4	—	—
DH368NRK	Switch Interior Assembly	70-8065-2	Fuse Base	70-8453-3	70-8453-4	—	—
DH368UGK	Switch Interior Assembly	70-8453	—	—	70-8453-4	—	—
DH368URK	Switch Interior Assembly	70-8453	—	—	70-8453-4	—	—
DH421FDK	Switching Base	70-7758-16	Fuse Base	70-7758-29	70-7758-34	70-7813	70-7813-2
DH421FGK	Switching Base	70-7758-16	Fuse Base	70-7758-29	70-7758-34	70-7813	70-7813-2
DH422FDK	Switching Base	70-7758-6	Fuse Base	70-7758-22	70-7758-35	70-7813	70-7813-2
DH422FGK	Switching Base	70-7758-6	Fuse Base	70-7758-22	70 7758-35	70-7813	70-7813-2
DH423FDK	Switching Base	70-7758-7	Fuse Base	70-7758-23	70-7758-35	70-7813	70-7813-2
DH423FGK	Switching Base	70-7758-7	Fuse Base	70-7758-23	70-7758-35	70-7813	70-7813-2
DH424FDK	Switching Base	70-7759-9	Fuse Base	70-7759-4 ③	70-7759-12	70-7833-4	70-7833-2
DH424FGK	Switching Base	Consult Factory	Fuse Base	Consult Factory	Consult Factory	70-7833-4	70-7833-2
DH425FGK	Switch Interior Assembly	70-8270	Fuse Base	70-8063-7	70-8270-4	70-7833-5	70-7833-2

③ Four used.

Catalog Number	Base or Assembly		Fuse Base and Lower Assembly		Line Shields	Operating Mechanism	Operating Handle
	Type	Part Number	Type	Part Number			
DH426FGK	Switch Interior Assembly	70-8271	Fuse Base	70-8064-7	70-8270-4	70-7833-6	70-7833-2
DH461FGK	Switching Base	70-7758-36	Fuse Base	70-7758-38	70-7758-34	70-7813	70-7813-2
DH461UDK	Switching Base	70-7758-40	—	—	70-7758-34	70-7813	70-7813-2
DH461UGK	Switching Base	70-7758-40	—	—	70-7758-34	70-7813	70-7813-2
DH461UWK	Switching Base	70-7758-42 ①	—	—	70-7758-35 ①	70-7813	70-7813-3
DH462FGK	Switching Base	70-7758-37	Fuse Base	70-7758-39	70 7758-35	70-7813	70-7813-2
DH462UDK	Switching Base	70-7758-13	—	—	70-7758-34	70-7813	70-7813-2
DH462UGK	Switching Base	70-7758-13	—	—	70-7758-34	70 7813	70-7813-2
DH462UWK	Switching Base	70-7758-42 ①	—	—	70-7758-35 ①	70-7813	70-7813-3
DH463FDK	Switching Base	70-7758-7	Fuse Base	70-7758-23	70-7758-35	70-7813	70-7813-2
DH463FGK	Switching Base	70-7758-7	Fuse Base	70-7758-23	70-7758-35	70-7813	70-7813-2
DH463UDK	Switching Base	70-7758-42	—	—	70-7758-35	70-7813	70-7813-2
DH463UGK	Switching Base	70-7758-42	—	—	70-7758-35	70-7813	70-7813-2
DH463UWK	Switching Base	70-7758-42	—	—	70-7758-35	70-7813	70-7813-3
DH464FDK	Switching Base	70-7759-9	Fuse Base	70-7759-5 ③	70-7759-12	70-7833-4	70-7833-2
DH464FGK	Switching Base	Consult Factory	Fuse Base	Consult Factory	Consult Factory	70-7833-4	70-7833-2
DH464UDK	Switching Base	70-7759-10	Lower Base & Connector	70-7759-6 ③	70-7759-12	70-7833-4	70-7833-2
DH464UGK	Switching Base	Consult Factory	—	—	Consult Factory	70-7833-4	70-7833-2
DH465FGK	Switch Interior Assembly	70-8270-2	Fuse Base	70-8063-7	70-8270-4	70-7833-5	70-7833-2
DH465UGK	Switch Interior Assembly	70-8270-3	—	—	70-8270-4	70-7833-5	70-7833-2
DH466FGK	Switch Interior Assembly	70-8271-2	Fuse Base	70-8064-7	70-8270-4	70-7833-6	70-7833-2
DH466UGK	Switch Interior Assembly	70-8271-3	—	—	70-8270-4	70-7833-6	70-7833-2
DH661FDK	Switching Base	70-7758-12 ①	Fuse Base	70-7758-27 ①	70-7758-34 ①	70-7813	70-7813-2
DH661UDK	Switching Base	70-7758-13 ①	—	—	70-7758-34 ①	70-7813	70-7813-2
DH661UDK2	Switching Base	70-7758-13 ①	—	—	70-7758-34 ①	70-7813	70-7813-2
DH661UDK3	Switching Base	70-7758-13 ①	—	—	70-7758-34 ①	70-7813	70-7813-2
DH661UWK	Switching Base	70-7758-5 ①	—	—	70-7758-35 ①	70-7813	70-7813-3
DH661UWK2	Switching Base	70-7758-5 ①	—	—	70-7758-35 ①	70-7813	70-7813-3
DH661UWK3	Switching Base	70-7758-5 ①	—	—	70-7758-35 ①	70-7813	70-7813-3
DH662FDK	Switching Base	70-7758-2 ①	Fuse Base	70-7758-20 ①	70-7758-35 ①	70-7813	70-7813-2
DH662UDK	Switching Base	70-7758-4 ①	—	—	70-7758-35 ①	70-7813	70-7813-2
DH662UWK	Switching Base	70-7758-5 ①	—	—	70-7758-35 ①	70-7813	70-7813-3
DH663FDK	Switching Base	70-7758-3 ①	Fuse Base	70-7758-21 ①	70-7758-35 ①	70-7813	70-7813-2
DH663UDK	Switching Base	70-7758-5 ①	—	—	70-7758-35 ①	70-7813	70-7813-2
DH663UWK	Switching Base	70-7758-5 ①	—	—	70-7758-35 ①	70-7813	70-7813-3
DH663UWK-316	Switching Base	70-7758-5 ①	—	—	70-7758-35 ①	70-7813	70-7813-3
DH664UDK	Switching Base	70-7759-13	Lower Base & Connector	70-7759-6 ④	70-7759-11 ①	70-7833-4	70-7833-2
DH664UDK3	Switching Base	70-7759-13	Lower Base & Connector	70-7759-6 ④	70-7759-11 ①	70-7833-4	70-7833-2
DH664UWK	Switching Base	70-7759-13	Lower Base & Connector	70-7759-6 ④	70-7759-11 ①	70-7833-4	70-7833-3
DP111NGB	—	—	—	—	—	—	—
DP111NRB	—	—	—	—	—	—	—
DP221NGB	—	—	—	—	—	—	—
DP221NRB	—	—	—	—	—	—	—
DT221UGK	Switching Base	70-7758-5	—	—	—	—	—
DT221URK-NPS	Switching Base	70-7758-5	—	—	—	—	—
DT221URK-NPS-BS	Switching Base	70-7758-5	—	—	—	—	—
DT221URKPS	Switching Base	70-7758-5	—	—	—	—	—
DT222UGK	Switching Base	70-7758-5	—	—	—	—	—
DT222URK-NPS	Switching Base	70-7758-5	—	—	—	—	—
DT222URK-NPS-BS	Switching Base	70-7758-5	—	—	—	—	—
DT222URKPS	Switching Base	70-7758-5	—	—	—	—	—
DT223UGK	Switching Base	70-7758-5 ①	—	—	—	—	—
DT223URK-NPS	Switching Base	70-7758-5	—	—	—	—	—
DT223URK-NPS-BS	Switching Base	70-7758-5	—	—	—	—	—
DT223URKPS	Switching Base	70-7758-5	—	—	—	—	—
DT223URKPS-N	Switching Base	70-7758-5	—	—	—	—	—
DT224FGK	Switching Base	70-8058-2	Fuse Base	70-8060	70-7759-11	—	—
DT224FRK	Switching Base	70-8058-2	Fuse Base	70-8060	70-7759-11	—	—
DT224UGK	Switching Base	70-8059	—	—	—	—	—
DT224UGK-FB	Switching Base	70-8059	—	—	—	—	—
DT224URK	Switching Base	70-8059	—	—	—	—	—
DT224URK-EXC	Switching Base	70-8059	—	—	—	—	—
DT224URK-N	Switching Base	70-8059	—	—	—	—	—

① Two used.
③ Four used.
④ Six used.

Catalog Number	Base or Assembly		Fuse Base and Lower Assembly		Line Shields	Operating Mechanism	Operating Handle
	Type	Part Number	Type	Part Number			
DT224URK-NPS	Switching Base	70-8059	—	—	—	—	—
DT224URK-NPS-BS	Switching Base	70-8059	—	—	—	—	—
DT224URKPS	Switching Base	70-8059	—	—	—	—	—
DT225UGK	Switch Base Assembly ⑤	70-8083	Switch Base Assembly ⑥	70-8083-2	—	—	70-7833-7
DT225URK	Switch Base Assembly ⑤	70-8083	Switch Base Assembly ⑥	70-8083-2	—	—	70-7833-7
DT225URK-N	Switch Base Assembly ⑤	70-8083	Switch Base Assembly ⑥	70-8083-2	—	—	70-7833-7
DT225URK-NPS	Switch Base Assembly ⑤	70-8083	Switch Base Assembly ⑥	70-8083-2	—	—	70-7833-7
DT225URK-NPS-BS	Switch Base Assembly ⑤	70-8083	Switch Base Assembly ⑥	70-8083-2	—	—	70-7833-7
DT225URKPS	Switch Base Assembly ⑤	70-8083	Switch Base Assembly ⑥	70-8083-2	—	—	70-7833-7
DT226UGK	Switch Base Assembly ⑤	70-8083-5	Switch Base Assembly ⑥	70-8083-6	—	—	70-7833-7
DT261UGK	Switching Base	70-7758-5 ①	—	—	—	—	—
DT262UGK	Switching Base	70-7758-5 ①	—	—	—	—	—
DT263UGK	Switching Base	70-7758-5 ①	—	—	—	—	—
DT264UGK	Switching Base	70-8059-2	—	—	—	—	—
DT264URK	Switching Base	70-8059-2	—	—	—	—	—
DT265UGK	Switch Base Assembly ⑤	70-8083	Switch Base Assembly ⑥	70-8083-2	—	—	70-7833-7
DT265URK	Switch Base Assembly ⑤	70-8083	Switch Base Assembly ⑥	70-8083-2	—	—	70-7833-7
DT266UGK	Switch Base Assembly ⑤	70-8083-5	Switch Base Assembly ⑥	70-8083-6	—	—	70-7833-7
DT266URK	Switch Base Assembly ⑤	70-8083-5	Switch Base Assembly ⑥	70-8083-6	—	—	70-7833-7
DT321FGK	—	—	—	—	70-7758-35 ①	—	—
DT321FRK	—	—	—	—	70-7758-35 ①	—	—
DT321UGK	Switching Base	70-7758-5	—	—	—	—	—
DT322FGK	Switching Base	70-7758	Fuse Base	70-7758-19 ①	70-7758-35 ①	—	—
DT322FRK	Switching Base	70-7758	Fuse Base	70-7758-19 ①	70-7758-35 ①	—	—
DT322NWK	Switching Base	70-7758	Fuse Base	70-7758-19 ①	70-7758-35 ①	—	—
DT322UGK	Switching Base	70-7758-5	—	—	—	—	—
DT323FGK	Switching Base	70-7758-3	Fuse Base	70-7758-21 ①	70-7758-35 ①	—	—
DT323FRK	Switching Base	70-7758-3	Fuse Base	70-7758-21 ①	70-7758-35 ①	—	—
DT323FWK	Switching Base	70-7758-3	Fuse Base	70-7758-21 ①	70-7758-35 ①	—	—
DT323NWK	Switching Base	70-7758-3	Fuse Base	70-7758-21 ①	70-7758-35 ①	—	—
DT323UGK	Switching Base	70-7758-5 ①	—	—	—	—	—
DT323URK	Switching Base	70-7758-5 ①	—	—	—	—	—
DT324FGK	Switching Base	70-8058	Fuse Base	70-8060	70-7759-11	—	—
DT324FRK	Switching Base	70-8058	Fuse Base	70-8060	70-7759-11	—	—
DT324FWK	Switching Base	70-8058	Fuse Base	70-8060	70-7759-11	—	—
DT324NWK	Switching Base	70-8058	Fuse Base	70-8060	70-7759-11	—	—
DT324UGK	Switching Base	70-8059-3	—	—	—	—	—
DT324URK	Switching Base	70-8059-3	—	—	—	—	—
DT325FGK	Switch Base Assembly	70-8084	Fuse Base	70-8085	70-8063-8	—	70-7833-7
DT325FRK	Switch Base Assembly	70-8084	Fuse Base	70-8085	70-8063-8	—	70-7833-7
DT325NWK	Switch Base Assembly	70-8084	Fuse Base	70-8085	70-8063-8	—	—
DT325UDK	Switch Base Assembly ⑤	70-8083	Switch Base Assembly ⑥	70-8083-2	—	—	70-7833-7
DT325UGK	Switch Base Assembly ⑤	70-8083	Switch Base Assembly ⑥	70-8083-2	—	—	70-7833-7
DT326FGK	Switch Base Assembly	70-8084-3	Fuse Base	70-8085-3	70-8064-8	—	70-7833-7
DT326FRK	Switch Base Assembly	70-8084-3	Fuse Base	70-8085-3	70-8064-8	—	70-7833-7
DT326UGK	Switch Base Assembly ⑤	70-8083-5	Switch Base Assembly ⑥	70-8083-6	—	—	70-7833-7
DT327UGK	Switch Base Assembly ⑤	70-8083-9	Switch Base Assembly ⑥	70-8083-10	—	—	70-7833-7
DT327UGK-N	Switch Base Assembly ⑤	70-8083-9	Switch Base Assembly ⑥	70-8083-10	—	—	70-7833-7
DT361FGK	Switching Base	70-7758	Fuse Base	70-7758-19 ①	70-7758-35 ①	—	—
DT361UDK	Switching Base	70-7758-5 ①	—	—	—	—	—
DT361UGK	Switching Base	70-7758-5 ①	—	—	—	—	—
DT361UGKW	Switching Base	70-7758-5 ①	—	—	—	—	—
DT361UGK22	Switching Base	70-7758-5 ①	—	—	—	—	—
DT361URK	Switching Base	70-7758-5 ①	—	—	—	—	—
DT361UWK	Switching Base	70-7758-5 ①	—	—	—	—	—
DT361UWK33	Switching Base	70-7758-5 ①	—	—	—	—	—
DT362FGK	Switching Base	70-7758-2	Fuse Base	70-7758-20 ①	70-7758-35 ①	—	—
DT36UDK	Switching Base	70-7758-5 ①	—	—	—	—	—
DT362UGK	Switching Base	70-7758-5 ①	—	—	—	—	—
DT362URK	Switching Base	70-7758-5 ①	—	—	—	—	—
DT362UWK	Switching Base	70-7758-5 ①	—	—	—	—	—
DT363FGK	Switching Base	70-7758-3	Fuse Base	70-7758-21 ①	70-7758-35 ①	—	—
DT363FRK	Switching Base	70-7758-3	Fuse Base	70-7758-21 ①	70-7758-35 ①	—	—
DT363FWK	Switching Base	70-7758-3	Fuse Base	70-7758-21 ①	70-7758-35 ①	—	—

① Two used.
⑤ Upper.
⑥ Lower.

Catalog Number	Base or Assembly		Fuse Base and Lower Assembly		Line Shields	Operating Mechanism	Operating Handle
	Type	Part Number	Type	Part Number			
DT363NWK	Switching Base	70-7758-3	Fuse Base	70-7758-21 ①	70-7758-35 ①	—	—
DT363UDK	Switching Base	70-7758-5 ①	—	—	—	—	—
DT363UGK	Switching Base	70-7758-5 ①	—	—	—	—	—
DT363URK	Switching Base	70-7758-5 ①	—	—	—	—	—
DT363UWK	Switching Base	70-7758-5 ①	—	—	—	—	—
DT364FGK	Switching Base	70-8058	Fuse Base	70-8060	70-7759-11	—	—
DT364FRK	Switching Base	70-8058	Fuse Base	70-8060	70-7759-11	—	—
DT364FWK	Switching Base	70-8058	Fuse Base	70-8060	70-7759-11	—	—
DT364NWK	Switching Base	70-8058	Fuse Base	70-8060	70-7759-11	—	—
DT364UDK	Switching Base	70-8059-3	—	—	—	—	—
DT364UGK	Switching Base	70-8059-3	—	—	—	—	—
DT364UGK-N	Switching Base	70-8059-3	—	—	—	—	—
DT364URK	Switching Base	70-8059-3	—	—	—	—	—
DT364UWK	Switching Base	70-8059-3	—	—	—	—	—
DT365FGK	Switch Base Assembly	70-8084-2	Fuse Base	70-8085-2	70-8063-8	—	70-7833-7
DT365FRK	Switch Base Assembly	70-8084-2	Fuse Base	70-8085-2	70-8063-8	—	70-7833-7
DT365NWK	Switch Base Assembly	70-8084-2	Fuse Base	70-8085-2	70-8063-8	—	—
DT365UDK	Switch Base Assembly ⑤	70-8083	Switch Base Assembly ⑥	70-8083-2	—	—	70-7833-7
DT365UGK	Switch Base Assembly ⑤	70-8083	Switch Base Assembly ⑥	70-8083-2	—	—	70-7833-7
DT365UGK-N	Switch Base Assembly ⑤	70-8083	Switch Base Assembly ⑥	70-8083-2	—	—	70-7833-7
DT365UGK33	Switch Base Assembly ⑤	70-8083	Switch Base Assembly ⑥	70-8083-2	—	—	70-7833-7
DT365URK	Switch Base Assembly ⑤	70-8083	Switch Base Assembly ⑥	70-8083-2	—	—	70-7833-7
DT365UWK	Switch Base Assembly ⑤	70-8083	Switch Base Assembly ⑥	70-8083-2	—	—	—
DT366UGK	Switch Base Assembly ⑤	70-8083-5	Switch Base Assembly ⑥	70-8083-6	—	—	70-7833-7
DT366UGK-N	Switch Base Assembly ⑤	70-8083-5	Switch Base Assembly ⑥	70-8083-6	—	—	70-7833-7
DT366URK	Switch Base Assembly ⑤	70-8083-5	Switch Base Assembly ⑥	70-8083-6	—	—	70-7833-7
DT366UWK	Switch Base Assembly ⑤	70-8083-5	Switch Base Assembly ⑥	70-8083-6	—	—	70-7833-7
DT367UGK	Switch Base Assembly ⑤	70-8083-9	Switch Base Assembly ⑥	70-8083-10	—	—	70-7833-7
DT367UGK-N	Switch Base Assembly ⑤	70-8083-9	Switch Base Assembly ⑥	70-8083-10	—	—	70-7833-7
DT367URK	Switch Base Assembly ⑤	70-8083-9	Switch Base Assembly ⑥	70-8083-10	—	—	70-7833-7
DT367URK-N	Switch Base Assembly ⑤	70-8083-9	Switch Base Assembly ⑥	70-8083-10	—	—	70-7833-7
DT461URK	Switching Base	70-7758-42	—	—	—	—	—
DT461UWK	Switching Base	70-7758-42	—	—	—	—	—
DT462URK	Switching Base	70-7758-42	—	—	—	—	—
DT463URK	Switching Base	70-7758-42	—	—	—	—	—
DT463URK2	Switching Base	70-7758-42	—	—	—	—	—
DT464UGK	Switching Base	70-8059-4	—	—	—	—	—
DT464URK	Switching Base	70-8059-4	—	—	—	—	—
DT465UGK	Switch Base Assembly ⑤	70-8272	Switch Base Assembly ⑥	70-8272-2	—	—	70-7833-7
DT465URK	Switch Base Assembly ⑤	70-8272	Switch Base Assembly ⑥	70-8272-2	—	—	70-7833-7
DT466UGK	Switch Base Assembly ⑤	70-8273	Switch Base Assembly ⑥	70-8273-2	—	—	70-7833-7
DT466URK	Switch Base Assembly ⑤	70-8273	Switch Base Assembly ⑥	70-8273-2	—	—	70-7833-7
DT467UGK	Switch Base Assembly ⑤	70-8274	Switch Base Assembly ⑥	70-8274-2	—	—	70-7833-7
DT467URK	Switch Base Assembly ⑤	70-8274	Switch Base Assembly ⑥	70-8274-2	—	—	70-7833-7
DT661URK	Switching Base	70-7758-5 ③	—	—	—	—	—
DT662URK	Switching Base	70-7758-5 ③	—	—	—	—	—
DT663URK	Switching Base	70-7758-5 ③	—	—	—	—	—

① Two used.
③ Four used.
⑤ Upper.
⑥ Lower.

Eaton Corporation
Cutler-Hammer business unit
1000 Cherrington Parkway
Moon Township, PA 15108-4312
USA
tel: 1-800-525-2000
www.cutler-hammer.eaton.com

© 2002 Eaton Corporation
All Rights Reserved
Printed in USA
Publication No. RP00801001E
July 2002

5.0 MECHANICAL (BOILER) SYSTEM

Tag ID: TIGERFLOW Series WHS-11000, Model DVMV-25GF-C-S6-VM-HVAC

Documentation: Review the following items in detail: 30 Minutes

a. Emergency Manuals
b. Operations Manuals
c. Maintenance Manuals
d. Project Record Documents
e. Identification Systems
f. Warranties and Bonds
g. Maintenance Service Agreements

Emergencies: Include the following, as applicable: 15 Minutes

a. Instructions on meanings of warnings
b. Instructions on stopping
c. Shutdown instructions for each type of emergency
d. Operating instructions for conditions outside of normal operating limits
e. Sequences for electric or electronic systems
f. Special operating instructions and procedures

Operations: Include the following, as applicable: 4 Hours

a. Startup procedures
b. Equipment or system break-in procedures
c. Routing and normal operating instructions
d. Regulation and control procedures
e. Control sequences
f. Safety procedures
g. Instructions on stopping
h. Normal shutdown instructions
i. Operating procedures for emergencies
j. Operating procedures for system, subsystem, or equipment failure
k. Seasonal and weekend operating instructions
l. Required sequences for electric or electronic systems
m. Special operating instructions and procedures

Adjustments: Include the following: 15 Minutes

a. Alignments
b. Checking adjustments
c. Noise and vibration adjustments
d. Economy and efficiency adjustments

Troubleshooting: Include the following: 15 Minutes

a. Diagnostic instructions
b. Test and inspection procedures

Maintenance: Include the following: 1 Hour

a. Inspection procedures
b. Types of cleaning agents to be used and methods of cleaning.
c. List of cleaning agents and methods of cleaning detrimental to product.
d. Procedures for routine cleaning
e. Procedures for Preventive maintenance
f. Procedures for routine maintenance
g. Instruction on use of special tools

Repairs: Include the following: 1 Hour

a. Diagnosis instructions
b. Repair instructions
c. Disassembly, component removal, repair, and replacement; and reassembly instructions
d. Instructions for identifying parts and components
e. Review of spare parts need for operation and maintenance

START-UP TEST PROCEDURES

PRE-CHECK: NO POWER IS REQUIRED FOR THESE CHECKS

1. Water to system suction and discharge piped correctly: _____
2. Unit is anchored and grouted? _____
3. Sensing lines attached? _____
4. Control panel wiring (no loose wires) _____
5. Temperature probes (piped to drain)? _____
6. Voltage: _____

   System: _____
7. Check motor wiring (no loose wires) _____
8. Tank feed line piped, valves open (if required) _____

TURN WATER SUPPLY ON:

9. Open all valves: check for leaks _____
10. Bleed PRV's (if constant speed system) _____
11. Bleed sensing lines _____

TURN ON POWER:

12. Verify voltage on panel and system _____
13. Check **TIGER'S EYE** program on panel; password "1865") _____
14. Check rotation on each pump _____

c UL US LISTED 8P55
c ETL LISTED US 2001945
TIGERFLOW ISO 9001 Certified # C2014-01875
NSF/ANSI 61 IAPMO N-5169 Certified
IAPMO R&T
California Low Lead Plumbing Law AB 1953/116875 • IAPMO# 6940

CAUTION: WHEN CHANGING ROTATION MAKE SURE ALL POWER IS OFF

15. Always start pumps with suction valves open, discharge valves closed.

16. Start Pump #1: Open discharge valve and allow flow to remove air from system, then bring back down to small flow.

17. Adjust PRV's to get the desired flow and psi. (if constant speed system)

18. When all adjustments are made, turn the system to auto position.

19. Unit is ready for operation.

START-UP TECHNICIAN: _____ DATE: _____

WITNESS: _____ DATE: _____

If you have questions, contact your local Representative or Keith Pirtle at
TIGERFLOW Systems, Inc. at (214) 337-8780

c UL us LISTED 8P55

2001945

ISO 9001 Certified # C2014-01875

NSF/ANSI 61 IAPMO N-5169 Certified

IAPMO R&T

California Low Lead Plumbing Law AB 1953/116875 • IAPMO# 6940

TIGERFLOW®
Engineered Systems to the World

4034 Mint Way
Dallas, Texas 75237
Ph: (214) 337-8780
Fax: (214) 333-2742
www.tigerflow.com
sales@tigerflow.com

Suggested Factory Maintenance Program

1. Lubrication of motor shall be every 5000 hours of use, or every 3 months.
   Type of grease: Shell Dolium R (Factory installed) or Chevron SRI

   Note: Apply grease until new grease appears between shaft and housing.
   DO NOT OVER-GREASE.

2. **When unit is in danger of freezing, take precautions to prevent pumps from being below freezing outside temperature. When precautions cannot be provided, you should drain the pump.**

3. Inspect pumps regularly for leaky seals or gaskets and loose or damaged components. Replace or repair as required.

4. The PRVs do not require regular maintenance. PRVs will only require maintenance if they start to operate improperly.

5. No preventative maintenance is required on control system.

6. No preventative maintenance is required on the temperature probes.

7. No regular maintenance is required on the isolation valves.

c UL US LISTED 8P55
c ETL LISTED US 2001945
ISO 9001 Certified # C2014-01875
NSF/ANSI 61 IAPMO N-5169 Certified
IAPMO R&T
California Low Lead Plumbing Law AB 1953/116875 • IAPMO# 6940

COPPER-FIN II®

Installation & Operation Manual
Models: 402 - 2072

WARNING: If the information in these instructions is not followed exactly, a fire or explosion may result causing property damage, personal injury or death.

-- Do not store or use gasoline or other flammable vapors and liquids in the vicinity of this or any other appliance.

-- WHAT TO DO IF YOU SMELL GAS

- Do not try to light any appliance.
- Do not touch any electrical switch; do not use any phone in your building.
- Immediately call your gas supplier from a near by phone. Follow the gas supplier's instructions.
- If you cannot reach your gas supplier, call the fire department.

-- Installation and service must be performed by a qualified installer, service agency, or the gas supplier.

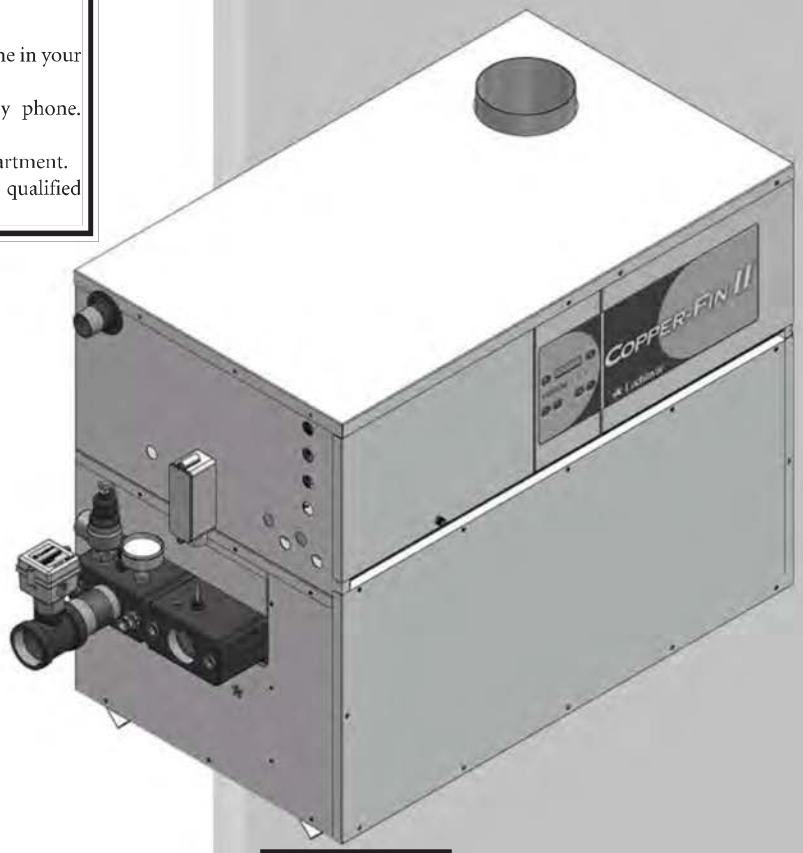

DESIGN CERTIFIED®

CERTIFIED®

⚠ WARNING:

This manual supplies information for the installation, operation, and servicing of the appliance. It is strongly recommended that this manual and the Copper-fin II Service Manual be reviewed completely before proceeding with an installation. Perform steps in the order given. Failure to comply could result in severe personal injury, death, or substantial property damage.

Save this manual for future reference.

Lochinvar®
High Efficiency Water Heaters, Boilers and Pool Heaters

Contents

HAZARD DEFINITIONS 2
PLEASE READ BEFORE PROCEEDING 3
SAFETY INFORMATION 4
THE COPPER-FIN II -- HOW IT WORKS 5-7
RATINGS 8
1. DETERMINE UNIT LOCATION
Location of Unit 9
Recommended Service Clearances 9
Non-Combustible / Combustible Flooring 10
Combustion Air Options 10-13
2. VENTING
Before You Begin 13
Vent System Options 14
General Venting Information 15
Conventional Negative Draft Venting 16-18
Vertical DirectAire Venting 19-21
Sidewall Venting 22-24
Horizontal DirectAire Venting 25
Direct Venting 26-29
Outdoor Installation 30
3. GAS CONNECTIONS
Connecting to Gas Supply 31
Gas Pressure Test 31
Checking Manifold Gas Pressure 31
Combination Gas Valves 32
Checking Gas Supply Pressure 33
4. WATER CONNECTIONS
Inlet & Outlet Connections 34
Relief Valve 35
Heating Boiler Installations 35-36
Low Temperature Return Water Systems 36
Low Temperature Bypass Requirements 36
Three Way Valves in System 37
Radiant Floor and Snow Melt Heating Systems 37
Typical Heating Boiler Installations 38
Installation with a Chilled Water System 38
Primary/Secondary Piping of a Single Boiler 39
Primary/Secondary Piping of Multiple Boilers 40
Boiler w/Low Temperature Bypass Piping 41
Primary/Secondary Piping with Buffer Tank 42
5. ELECTRICAL CONNECTIONS
Boiler Operating Control Module 43
Line Voltage Connections 44
Low Voltage Connections 44
Wiring of the Cascade 45
Low Voltage Field Wiring Connections 46
6. STARTUP
Check/Control Water Chemistry 47
Freeze Protection (when used) 47
Fill and Test Water System 47
Purge Air from Water System 47
Check for Gas Leaks 47
Check Thermostat Circuit(s) 48
Check Vent and Air Piping 48
Placing the Boiler in Operation 48
Start the Boiler 48
If Boiler Does Not Start Correctly 48
Set Space heating Operation (boiler only) 48
Operating Instructions 49
Set DHW Operation 50
7. OPERATING INFORMATION
General 51-53
Cascade 53-54
Sequence of Operation 55-56
Copper-fin II Control Module 56
Access Modes 57
Saving Parameters 57
Status Display Screens 58-61
8. DOMESTIC WATER HEATERS
Initial Setup of Maximum Water Flow 62
Water Chemistry 63
Typical Water Heater Piping w/Storage Tank(s) 64-65
Multiple Water Heater Piping w/Storage Tank(s) 66-67
Pump Operation 68
Minimum Water Temperatures (domestic hot water) 69
9. MAINTENANCE 71-75
10. CONNECTION DIAGRAM 76-77
11. LADDER DIAGRAM 78-79
Revision Notes ..... Back Cover

Hazard definitions

The following defined terms are used throughout this manual to bring attention to the presence of hazards of various risk levels or to important information concerning the life of the product.

⚠ DANGER DANGER indicates an imminently hazardous situation which, if not avoided, will result in death or serious injury.

⚠ WARNING WARNING indicates a potentially hazardous situation which, if not avoided, could result in death or serious injury.

⚠ CAUTION CAUTION indicates a potentially hazardous situation which, if not avoided, may result in minor or moderate injury.

CAUTION CAUTION used without the safety alert symbol indicates a potentially hazardous situation which, if not avoided, may result in property damage.

NOTICE NOTICE indicates special instructions on installation, operation, or maintenance that are important but not related to personal injury or property damage.

The Copper-fin II - How it works...

1. **Heat exchanger**
   The heat exchanger allows system water to flow through specially designed tubes for maximum heat transfer. The glass lined headers and copper fined tubing are encased in a jacket that contains the combustion process.
2. **Heat exchanger access cover**
   The heat exchanger access cover is a galvanized steel door which allows access for service, maintenance, and removal of the heat exchanger from inside the combustion chamber.
3. **Blower**
   The blower pulls in and injects air into the individual burners along with gas from the gas manifold where the mix is burned inside the combustion chamber.
4. **Gas valve**
   The gas valves (reference) have a dual purpose; changing the gas supply pressure to manifold pressure, and the reference side of the gas valve is designed to allow chamber pressure to change the volume of gas through the valve and measured as net manifold pressure. This is not a design to compensate for gas supply pressure issues.
5. **System / tank temperature sensor (not shown)**
   When connected, this sensor can be used as a system sensor or a tank sensor.
6. **Outlet/limit temperature sensor**
   This sensor monitors the outlet water temperature. If selected as the controlling sensor and a system supply sensor is not connected, the appliance will maintain set point by adjusting the firing rate of the unit according to this sensor.
7. **Inlet temperature sensor**
   This sensor monitors inlet water temperature. If selected as the controlling sensor and a system return sensor is not connected, the appliance will maintain set point by adjusting the firing rate of the unit according to this sensor.
8. **Temperature and pressure gauge (boilers only)**
   The temperature and pressure gauge monitors the outlet temperature of the appliance as well as the system water pressure.
9. **Electronic display**
   The electronic display consists of 6 buttons and a two-line 16-character liquid crystal display used to monitor the operation of the heater as well as enter and view the programming of the main control board.
10. **Burner**
    The burner is a ported stainless steel construction which uses a gas air mix to operate at a fixed input. Banks of burners turn on or off to vary the firing rate.
11. **Water outlet (system supply)**
    The water outlet is a 2 or 2 1/2" (depending on model) pipe connection that supplies water to the system with connections for a flow switch (see #26), a relief valve (see #23), and a temperature and pressure gauge (boilers only) (see #8).
12. **Water inlet (system return)**
    The water inlet is a 2 or 2 1/2" (depending on model) pipe connection that receives water from the system and delivers it to the heat exchanger.
13. **Gas supply pipe**
    The gas supply pipe on this appliance is 1 1/4 or 2" (depending on model) diameter NPT. Please reference the National Fuel Gas Code charts for connection details.
14. **SMART SYSTEM Control Module**
    The SMART System Control Module is the main control for the appliance. This module contains the programming that operates the blower, gas valve, and pumps in addition to other programmable features.
15. **Air intake**
    Fresh air for combustion is drawn through a filter provided at the air intake, located at either the rear or right side of the appliance.
16. **Line voltage terminal strip**
    The line voltage terminal strip provides a location to connect all of the line voltage (120 VAC) contact points to the unit.
17. **Low voltage connection board(s)**
    The low voltage connection board provides a location to connect all of the low voltage devices to the appliance. This is where most of the external safety controls are connected.
18. **Front doors - upper and lower**
    The front doors provide access to the gas train as well as the blower, burners and other key components for service and maintenance.
19. **Hot surface igniter (HSI)**
    The hot surface igniter is a device that is used to ignite the air/gas mixture as well as monitor the performance of the flame during operation. This device acts as a flame sense electrode.
20. **Flame inspection window (sight glass)**
    The flame inspection windows, located on either side of the appliance, allow for visual inspection of the burners and flame during operation.
21. **Gas shut off valve (downstream test cock) (boiler only)**
    The downstream test cock is provided in the gas train to ensure complete shut off of the gas to the burner in case of maintenance, inspection, or testing of the valve.
22. **Manual reset high limit sensor**
    This device monitors the outlet water temperature to ensure safe operation. If the temperature exceeds its setting (field adjustable), it will break the control circuit, shutting the appliance down. Manual reset is performed through the display.
23. **Relief valve**
    The relief valve is a safety device that ensures the maximum pressure of the appliance is not exceeded. Boilers operate on pressure only and are shipped from the factory at a rating of 50 PSI. Water heaters operate on temperature and pressure and are shipped standard as 150 PSI and 210°F (98.9°C).
24. **Power switch**
    The power switch is used to engage and disengage power to the appliance on the 120 VAC circuit.
25. **Air pressure switch**
    The air pressure switch is a safety device which ensures proper blower operation. The air pressure switch is wired in series with the low voltage control circuit in such a way that if the fan does not engage or shuts down prematurely the device will break the control circuit and the unit will shut down.
26. **Flow switch**
    The flow switch is a safety device that ensures flow through the heat exchanger during operation. This appliance is low mass and should never be operated without flow. The flow switch makes contact when flow is detected and allows the unit to operate. If flow is discontinued during operation for any reason the flow switch will break the control circuit and the unit will shut down.
27. **Drain port(s)**
    The drain ports are located underneath the front header.
28. **Manual shutoff valve (not shown)**
    Manual valve used to isolate the unit from the gas supply.

6 Start-up

Check/control water chemistry

⚠ CAUTION Do not use petroleum-based cleaning or sealing compounds in the boiler system. Damage to elastomer seals and gaskets in the system could occur, resulting in substantial property damage.

Hardness less than 7 grains

1. Consult local water treatment companies for hard water areas (above 7 grains hardness).

Chlorine concentration less than 200 ppm

1. Do not fill boiler or operate with water containing chlorine in excess of 200 ppm.
2. Filling with chlorinated fresh water should be acceptable since drinking water chlorine levels are much lower.
3. Do not use the boiler to directly heat swimming pool or spa water.

Test/replace freeze protection fluid

1. For systems using freeze protection fluids, follow fluid manufacturer's instructions.
2. Freeze protection fluid must be replaced periodically due to degradation of inhibitors over time. Follow all fluid manufacturer's instructions.

Freeze protection (when used)

1. Determine freeze protection fluid quantity using system water content, following fluid manufacturer's instructions. Appliance water content is listed on page 8. Remember to include expansion tank water content.
2. Local codes may require a backflow preventer or actual disconnect from city water supply.
3. When using freeze protection fluid with automatic fill, install a water meter to monitor water makeup. Freeze protection fluid may leak before the water begins to leak, causing concentration to drop, reducing the freeze protection level.

Fill and test water system

1. Fill system only after ensuring the water meets the requirements of this manual.
2. Close manual and automatic air vents and boiler drain valve.
3. Fill to correct system pressure. Correct pressure will vary with each application.
   a. The minimum cold water fill pressure should be 12 PSI.
   b. Pressure will rise when boiler is turned on and system water temperature increases.
4. At initial fill and during boiler startup and testing, check system thoroughly for any leaks. Repair all leaks before proceeding further.

⚠ WARNING Eliminate all system leaks. Continual fresh makeup water will reduce boiler life. Minerals can build up in the heat exchanger, reducing heat transfer, overheating the heat exchanger, and causing heat exchanger failure.

Purge air from water system

1. Purge air from system:
   a. Connect a hose to the purge valve (see purge/drain valves, in the piping diagrams on pages 39 - 42). Route the hose to an area where water can drain and be seen.
   b. Close the boiler or system isolation valve between the purge valve and fill connection to the system.
   c. Close zone isolation valves.
   d. Open quick-fill valve on cold water makeup line.
   e. Open purge valve.
   f. One zone at a time, open the isolation valves. Allow water to run through the zone, pushing out the air. Run until no noticeable air flow is present. Close the zone isolation valves and proceed with the next zone. Follow this procedure until all zones are purged.
   g. Close the quick-fill water valve and purge valve and remove the hose. Open all isolation valves. Watch that system pressure rises to correct cold-fill pressure.
   h. After the system has operated for a while, eliminate any residual air by using the manual air vents located throughout the system.
   i. If purge valves are not installed in the system, open the manual air vents in the system one at a time, beginning with the lowest floor. Close the vent when water squirts out. Repeat with remaining vents.
2. Open automatic air vent (diaphragm-type or bladder-type expansion tank systems only) one turn.
3. Open other vents:
   a. Starting on the lowest floor, open air vents one at a time until water squirts out.
   b. Repeat with remaining vents.
4. Refill to correct pressure.

Check for gas leaks

⚠ WARNING Before starting the boiler, and during initial operation, smell near the floor and around the boiler for gas odorant or any unusual odor. Remove the front access panel and smell the interior of the boiler enclosure. Do not proceed with startup if there is any indication of a gas leak. Use an approved leak detection solution. Repair any leaks at once.

⚠ WARNING Propane boilers only – Your propane supplier mixes an odorant with the propane to make its presence detectable. In some instances, the odorant can fade, and the gas may no longer have an odor. Before startup (and periodically thereafter), have the propane supplier verify the correct odorant level in the gas.

6 Start-up

Check thermostat circuit(s)

1. Disconnect the two external wires connected to the enable terminals on the connection board.
2. Connect a voltmeter across these two incoming wires. Close each thermostat, zone valve, and relay in the external circuit one at a time and check the voltmeter reading across the incoming wires.
3. There should NEVER be a voltage reading.
4. If a voltage does occur under any condition, check and correct the external wiring. (This is a common problem when using 3-wire zone valves.)
5. Once the external thermostat circuit wiring is checked and corrected if necessary, reconnect the external thermostat circuit wires to the connection board. Allow the boiler to cycle.

Check vent and air piping

Inspect vent piping and air piping for signs of deterioration from corrosion, physical damage or sagging. Verify air piping and vent piping are intact and correctly installed per this manual.

Placing the boiler in operation

Boiler operational checks

1. Turn the boiler main power switch to the "ON" position.
2. Verify operation of the SMART SYSTEM control module and Operator Interface.
3. Program the adjustable points from the Operator Interface.
4. Push the reset for the low water cutoff (if equipped).
5. Ensure that maximum flow to the boiler does not exceed 55 GPM on Models 402 - 752 and 90 GPM on Models 992 - 2072. Verify by checking temperature rise while burner is firing at 100% of rated input.
6. Install a manometer on the gas supply to the boiler and verify minimum gas supply pressure as the burner fires at 100% of rated input.
7. Verify operation of safeties as necessary (low water cutoff, high limit, gas pressure, etc.,).
8. Verify that all adjustable points in the Operator Interface are set as required.
9. Once the boiler analysis is complete, test the safety shutoff device by turning the manual shutoff valve to the OFF position and ensuring that the boiler shuts down and registers an alarm. Open the manual shutoff valve and reset the control.
10. Place the boiler back into normal operation.

Boiler operation

11. Boiler should begin the start-up process for the sequence of operation.
12. The boiler will ignite at the proper ignition speed and will stage to meet the system demand.
13. Ensure that inlet water temperature does not fall below the specified minimum for the boiler.
14. Based on system demand, boilers may run for an extended period of time at a reduced rate of input to maximize efficiency.
15. As system demand is satisfied, the burner will cycle off and the combustion air blower will run for a post purge operation before the boiler shuts down.

Start the boiler

Read and follow the Lighting Instructions in FIG. 6-1, on page 49.

If boiler does not start correctly

1. Check for loose connections, blown fuse or service switch off?
2. Is external limit control (if used) open? Is boiler water temperature above 200°F (93.3°C)?
3. Is thermostat set below room temperature?
4. Is gas turned on at meter or boiler?
5. Is incoming gas pressure less than 4.5" water column?

If none of the above corrects the problem, refer to the Troubleshooting Section of the Copper-fin II Service Manual.

⚠ WARNING The venting system must be installed so that it will prevent flue gas spillage and carbon monoxide emissions, which will result in severe personal injury or death.

Set space heating operation (boiler only)

Determine controlling sensor

For space heating systems, the temperature control can be based on one of four sensors; the **inlet, outlet, system supply sensor, or system return sensor**. The SMART SYSTEM control is programmed at the factory to control the temperature of the outlet sensor. The control will automatically switch to the system supply sensor once it is connected. If it is desired to base the temperature control on the inlet sensor, the appropriate parameter must be changed in the control. See the Copper-fin II Service Manual for a detailed explanation of this procedure. The control will automatically switch to the system return sensor once it is connected. It is recommended that a system supply sensor be installed even when using the inlet sensor as the controlling sensor.

Verify space heat circulator mode

The Space Heating Mode controls both the system (primary) pump (if connected), and the boiler (secondary) pump. When the SMART SYSTEM control receives a space heating call for heat, it turns on the system pump. If the boiler is not heating an indirect DHW (Domestic Hot Water) tank, it also turns on the boiler pump. After the space heating call for heat ends, the system pump continues to run for a short period of time. If the boiler pump was running, it continues to run for a short period of time as well. These pump delays are factory set to 30 seconds. If different delays are desired, the appropriate parameters in the control must be changed. See the Copper-fin II Service Manual for a detailed explanation of this procedure.

Set space heating set point temperature

The UP and DOWN keys may be used during normal operation to adjust the space heating set point temperature (see FIG. 7-1 on page 56 of this manual). Once the desired temperature is displayed, press the ENTER/RESET key to save the new setting. If the ENTER/RESET key is not pressed, the new setting will be used for the current heating cycle only. The old setting will become active after the current heating cycle ends.

6 Start-up *(continued)*

***Figure 6-1**_Lighting Instructions*

FOR YOUR SAFETY READ BEFORE OPERATING

WARNING: If you do not follow these instructions exactly, a fire or explosion may result causing property damage, personal injury or loss of life.

A. This appliance is equipped with an ignition device which automatically lights the burner. Do not try to light the burner by hand.

B. BEFORE OPERATING smell all around the appliance area for gas. Be sure to smell next to the floor because some gas is heavier than air and will settle on the floor.

FOR YOUR SAFETY
"WHAT TO DO IF YOU SMELL GAS"

- Do not try to light any appliance.
- Do not touch any electrical switch; do not use any phone in your building.
- Immediately call your gas supplier from a neighbor's phone. Follow the gas supplier's instructions.
- If you cannot reach your gas supplier, call the fire department.

C. Use only your hand to turn the gas control knob. Never use tools. If the knob will not turn by hand, don't try to repair it, call a qualified service technician. Force or attempted repair may result in a fire or explosion.

D. Do not use this appliance if any part has been under water. Immediately call a qualified service technician to inspect the appliance and to replace any part of the control system and any gas control which has been under water.

OPERATING INSTRUCTIONS

1. STOP! Read the safety information above on this label.
2. Turn off all electric power to the appliance.
3. Open control access panel.
4. This appliance is equipped with an ignition device which automatically lights the burner. Do not try to light the burner by hand.

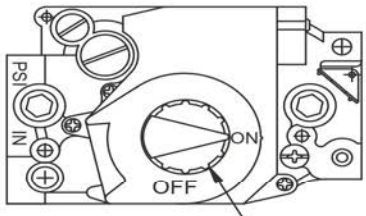

GAS CONTROL KNOB
SHOWN IN THE "ON" POSITION

5. Push in gas control knob slightly and turn clockwise to "OFF."

NOTE: On the 36C valve, knob cannot be turned to "OFF" unless knob is pushed in slightly. Do not force.

6. Wait five (5) minutes to clear out any gas. Then smell for gas, including near the floor. If you smell gas, STOP! Follow "B" in the safety information above on this label. If you don't smell gas, go to the next step".
7. Turn gas control knob counterclockwise to "ON."
8. Replace control access panel.
9. Turn on all electric power to the appliance.
10. If the appliance will not operate, follow the instructions "To Turn Off Gas To Appliance" and call your service technician or gas supplier.

TO TURN OFF GAS TO APPLIANCE

1. Turn off all electric power to the appliance if service is to be performed.
2. Open control access panel.
3. Push in gas control knob slightly and turn clockwise to "OFF". Do not force.
4. Replace control access panel.

LBL2084 REV D

6 Start-up

Set DHW operation

Verify DHW circulator mode (boiler only)

The DHW Mode is programmed to heat an indirect domestic hot water tank. When the tank thermostat or tank sensor calls for heat, the SMART SYSTEM control will turn on the DHW pump and turn off the boiler pump (if running). If the system pump is running, it will remain on. When the DHW call for heat ends, and there is no space heating call for heat, the DHW pump will continue to run for a period of time. This pump delay is set at the factory to 30 seconds. If a shorter or longer delay is desired, the appropriate parameter in the control must be changed. See the Copper-fin II Service Manual for a detailed explanation of this procedure. If there is an active space heating call for heat, then the boiler pump will be turned on and the DHW pump will be turned off.

Set outlet target temperature (boiler only)

When in the DHW Mode, the control will modulate to maintain the outlet temperature to a set point. This set point is set at the factory to 180°F (82.2°C). If a different set point is desired, the appropriate parameter in the control must be changed. See the Copper-fin II Service Manual for a detailed explanation of this procedure.

Set tank target temperature

If a tank sensor is used, the tank set point can be adjusted by pressing either the UP or DOWN key. A menu will appear on the LCD display. Press the DOWN key to select the tank set point, and press ENTER. Use the UP and DOWN keys to adjust the set point. Press the ENTER key again to save the new set point and return to the normal display.

Set clock

The SMART SYSTEM control has a built-in clock that it uses for its night setback feature and for logging events. This clock must be set when the appliance is installed, and anytime the appliance has been powered off for more than one month. Use the following procedure to set the clock:

1. Press and hold the MENU key (FIG. 7-1) for at least 5 seconds.
2. The display changes to ready "ENTER MENU CODE", with four (4) zeros below it.
3. Change the zeros to match the user code (factory set at "0704"). Use the UP and DOWN keys to increment or decrement the flashing digit, and the NEXT and PREVIOUS keys to select which digit flashes.
4. Press the ENTER key.
5. The display changes to read USER CODE for a few seconds, then displays a menu.
6. Press the ENTER key.
7. Press the UP key twice to display "A3 DATE AND TIME".
8. Press the ENTER key once.
9. The date and time are displayed as "YY:MM:DD W hh:mm", where:
   - mm: minutes
   - hh: hour (24 hour time; e.g., 2:00 PM = 14:00)
   - W: day of the week (1 = Sunday, 2 = Monday, 3 = Tuesday, etc.,)
   - YY: year
   - MM: month
   - DD: date

NOTICE The internal clock does not adjust for Daylight Savings Time and therefore, will require a manual adjustment.

Use the UP and DOWN keys to increment or decrement the flashing number, and the NEXT and PREVIOUS keys to select which number flashes.

10. Press the ENTER key to save the setting.
11. Press the MENU key twice to exit the Programming Mode.

Configuration of the cascade

When installed in a Cascade system, the individual controls must be programmed for cascade operation. This is accomplished by accessing the control parameters.

Input the Installer code as described in the Copper-fin II Service Manual. Once the control parameters have been accessed, use the DOWN arrow key to select the H Control Mode parameters. Press the ENTER key to access these parameters. Use the UP arrow key to access parameter H4 Cascade. Press the ENTER key to access this parameter. Use the DOWN arrow key to select Enable. Press the ENTER key to program this into the control. Press the EXIT key, then press the DOWN key until I Cascade is selected.

Press the ENTER key to select the parameter I1 BLR Address. Press the ENTER key to access this parameter. Each unit in the Cascade system must be programmed with its own address. The unit designated as the Leader will have an address of 0. The remaining units in the Cascade will be Members and have addresses from 1 - 7. Use the UP and DOWN arrow keys to select the appropriate address. Press the ENTER key to program this into the control.

Press the MENU key twice to exit the control parameters. Repeat this procedure for all appliances in the Cascade, designating the Leader control and the Member controls.

7 Operating information *(continued)*

General

How the appliance operates

The Copper-fin II uses a copper finned tube heat exchanger to transfer heat from the flue products to the water. An electronic control module monitors various inputs to initiate a call for heat. The blower provides both primary and secondary air to the burner and forces the flue products out of the combustion chamber and into the vent system. The control module regulates the blower speed and firing stages, based upon the heat demand. Gas valves regulate the amount of gas supplied for the firing stages, which is then mixed with the combustion air supplied to the burner.

NOTICE If an inline high gas pressure regulator is used, it MUST BE of the lockup type and be located a minimum of 10 feet from the appliance. Failure to do so may result in insufficient gas volume supplied to the appliance.

NOTICE If a pressure drop of more than 2" water column occurs between Standby (static) Mode and Operating (dynamic) Mode, a gas volume problem exists. Contact the gas utility, gas supplier, qualified installer, or service agency to determine the necessary steps to provide the proper gas volume to the appliance.

How the control module operates

The SMART SYSTEM control module receives input from appliance sensors and external devices. The control module activates and controls the blower and gas valves to regulate heat input and switches the boiler, Domestic Hot Water (DHW), and system pumps on and off as needed. The user programs the module to meet system needs by adjusting control parameters. These parameters set operating temperatures and appliance operating modes. Boiler operation can be based on boiler outlet water temperature, boiler inlet water temperature, system supply temperature, or system return temperature, depending on the parameter setting. Water heater operation can be based on a tank sensor or a tank thermostat.

Control inputs and outputs

Staging S1 - S4

The S1 input tells the boiler to provide water for space heating. The S2 - S4 inputs are used when a sequencer controls the boiler.

Tank Aquastat

This input tells the boiler to provide water for heating a domestic hot water tank.

0 - 10V input (set point or power)

The Copper-fin II can be controlled by a Building Management System (BMS) using a 0 - 10 VDC signal. The control can be configured by the installer to use this signal to either control set point or firing rate.

DHW priority (boiler only)

The SMART SYSTEM control module allows connection of a DHW thermostat or tank sensor to the low voltage connection board. When the DHW thermostat or tank sensor calls for heat, the module activates the DHW pump, shuts down the boiler pump, and immediately sets the target outlet water temperature to 180°F (82.2°C). This provides automatic priority heat allocation to the indirect water heater for maximum response and recovery. The DHW pump continues for 30 seconds after the heating cycle to deliver the most possible heat.

DHW / SH (space heating) cycling (boiler only)

If an indirect DHW call for heat is received while a space heating call is in progress, the control will start the DHW pump and shut the boiler pump off. The system pump will remain on. If the space heating call is still active while the DHW call is in operation, the control will wait for 30 minutes (time adjustable by installer) then it will switch back to the space heating demand. The control will switch back and forth until one of the heat demands end.

Programmable controlling sensor (boiler only)

The control module is programmed to use the outlet sensor as the control sensor by default. If a system supply sensor is connected, the control automatically uses it as the control sensor. The control sensor can be changed by the installer to the inlet sensor. In this case, if a system return sensor is installed, the control automatically uses it as the control sensor. If the inlet sensor is chosen as the controlling sensor, it is recommended that the system supply sensor be installed for the best system performance.

Anti-cycling (boiler only)

After the set point has been satisfied, the control will delay the next burner cycle for a set time period (time is adjustable by the installer). The time delay will be bypassed if the system return temperature drops too far during the delay.

Boiler, system, and DHW pump control

When a space heating call for heat starts and no DHW call is on, the system and boiler pumps are turned on. As long as the space heating call for heat is on, the system pump will remain on. If a DHW call for heat is on, the boiler pump will wait to turn on until just before the DHW pump turns off. After the space heating call for heat ends, both pumps will run for an additional period of time.

When a DHW call for heat starts, the DHW pump is turned on. If a space heating call for heat was on, the boiler pump will turn off a few seconds after the DHW pump turns on.

7 Operating information

Temperature control

Firing rate

Depending upon the model, the Copper-fin II is capable of staging its firing rate from a minimum of 25% to a maximum of 100%. The firing rate is dictated by the call for heat (i.e., space heating or domestic hot water), the heating load, ramp delay (if enabled), and various other temperature limitations.

Ramp delay (boiler only)

For systems with lower flow, the SMART SYSTEM can limit the firing rate (when enabled) when a space heating call for heat starts, or when switching from a DHW call for heat to a space heating call for heat. There are six (6) limits that can be programmed, as well as six (6) time intervals corresponding to each limit. The sixth limit will also limit the firing rate for the rest of the call for heat.

Gradient limiting

If during operation of the heater the outlet water temperature is rising too quickly, the control will reduce the firing rate to its lowest setting.

Outdoor air reset (boiler only)

With the outdoor air sensor connected, the control module will calculate the set point based on the programmed reset curve. The installer can change the slope of the reset curve by several adjustable parameters. The user can limit the maximum set point for the system using the space heating set point.

Boost function (boiler only)

If outdoor air reset is active, and a space heating demand has been active continuously for a set period of time (time adjustable by installer) and there has been no DHW demands, the control may be programmed to increase the set point by a fixed number of degrees (adjustable by installer). This process will repeat until the space heating demand ends, the set point reaches the programmed set point or a maximum of 20 increases has occurred. Once the system heat demand is satisfied, the set point will revert to the value determined by the reset curve.

Night setback

The controller may be programmed to reduce the space heating (boilers) and tank set points during a certain time each day. A start and stop time can be programmed for each day of the week.

Protection features

Outlet temperature, and temperature rise limiting

The outlet temperature is monitored by the boiler outlet temperature sensor. When the outlet temperature exceeds 230°F (110°C) (boilers) or 190°F (88°C) (water heaters), the unit will reduce the firing rate. If the outlet water temperature exceeds 235°F (113°C) (boilers) or 200° (93°C) (water heaters) the control will shut the unit down until it cools off.

The control monitors the temperature difference between the inlet and the outlet sensor. If this difference exceeds the first limit the control will turn off stages. If the temperature difference exceeds a second limit the control will shut the unit down. The unit will restart automatically once the temperature difference has dropped 10°F (6°C) and the minimum off time has expired.

Freeze protection

DO NOT install the appliance in a room likely to freeze.

The following integral feature of the SMART SYSTEM control module provides some protection for the appliance only -- not for the system.

- The SMART SYSTEM control module provides freeze-up protection as follows when the appliance water temperature drops below 45°F (7.2°C):
- Below 45°F (7.2°C), the appliance and system pumps operate constantly.
- Below 37°F (2.7°C), the appliance turns on.
- Appliance and pumps turn off if appliance water temperature rises above 45°F (7.2°C).

⚠ CAUTION This feature of the SMART SYSTEM control module does not eliminate the possibility of freezing. The installer must still use recognized design, installation and maintenance practice to prevent freeze potential for the appliance and system.

High limit operations

When outlet temperature exceeds 240°F (116°C) (boilers) or 210°F (99°C) (water heaters), high limit action occurs. The appliance shuts down until the outlet water cools down and the RESET button on the Operator Interface is pressed.

7 Operating information *(continued)*

Low water cutoff protection

1. The SMART SYSTEM control module uses temperature sensing of both inlet and outlet areas of the heat exchanger. If the flow rate is too low or the outlet temperature too high, the control module modulates and shuts the appliance down. This along with the flow switch, ensures appliance shutdown in the event of low water or low flow conditions.

2. Some codes and jurisdiction may accept these integral features of the control in lieu of requiring an additional limit control or low water cutoff. Consult local jurisdiction to determine. Contact manufacturer for low water cutoff kit availability.

Monitor external limits

Connections are provided on the connection board for external limits such as a louver proving switch. The SMART SYSTEM will shut off the burner and inhibit relighting whenever any of these external limits open.

Run-time and alarm outputs

The appliance provides dry contacts for indicating when the appliance is running, and when it is unable to operate.

Run-time and cycle counting

The control uses two timers to monitor the total hours of burner operation. One timer monitors the time the appliance is firing under 50% of rate. The other timer monitors the time the appliance is firing over 50% rate.

The control uses four (4) ignition counters to monitor the amount of appliance cycles. The first counter counts all ignitions of the control. The second counter counts only ignition attempts that have failed. The third and fourth counters are the same as the first and second respectively, but can be reset by the installer.

Service reminder

The control can be programmed for service reminder notification. This notification will become active when either a set time frame has expired, or a set amount of running hours or cycles has expired (all adjustable by the installer). The display will alternate the standard text on the display screen with Service Due every 5 seconds. The service reminder notification can be reset by the installer.

Error logging

The control will hold in memory the last 10 error codes as well as the last 10 turn-off functions. The date and time of the occurrence will be recorded as well. Only the 10 most current occurrences will be held in memory.

Boiler temperature regulation

Operating temperature (target)

The SMART SYSTEM control module senses water temperature and regulates appliance firing and firing rate to achieve a target temperature. The target temperature can be set between 70°F (21°C) and 220°F (104°C) (boilers) or between 60°F (16°C) and 190°F (88°C) (water heaters).

- Target temperature is fixed when the outdoor sensor is not installed (boilers).
- Target temperature is calculated as described under "Outdoor Air Reset Operation" and "Boost Function" when the outdoor sensor is connected (boilers).

Outdoor reset operation, if used (boilers only)

Target temperature with outdoor reset

This feature improves the system's efficiency as the outdoor temperature warms up.

See the Copper-fin II Service Manual to change the settings.

Reset curve

The reset curve looks at outdoor air temperature and adjusts the set point.

Cascade

When multiple appliances are installed, they can be wired together in a cascade sequence. A maximum of eight appliances can be controlled from a single control. In this application one appliance would be designated as the Leader control and all others would be designated as Member controls. The set point or firing rate can be controlled by the 0 - 10V input as well.

Once the Leader appliance receives a call for heat from a BMS, tank sensor, or external thermostat, the control will determine what the set point will be. A fixed temperature set point can be programmed into the control. See Copper-fin II Service Manual to program the set point.

On boilers, if the water temperature at the system sensor is less than the set point + the turn-off offset - the off-on differential, then the control will initiate a call for heat on the Cascade (see the Copper-fin II Service Manual for an explanation of the offset and differential). The Leader will energize the lead appliance on the Cascade. For a new startup this will be the Leader appliance.

On water heaters, if the water temperature at the tank sensor is less than the tank set point - the off differential, then the control will initiate a call for heat on the Cascade.

7 Operating information

The appliance will fire at its ignition speed and will then stage its firing rate to maintain the set point. If the first appliance reaches 100% of its firing rate, the Leader will calculate at what point the second appliance could fire at its minimum firing rate. At this point, the Leader will fire the second appliance on the Cascade. For a new startup, this would be the first Member appliance. The appliance will fire at its ignition speed and will then staging its firing rate to maintain the set point.

If the set point still cannot be met, the Leader will continue firing more Members until either the heat demand is met or all appliances on the Cascade are firing. As the heat demand decreases, the last appliance on will stage down to its minimum firing rate. Once the demand for that appliance is 0% it will shut down. As the heat demand decreases further, the second to last appliance will stage down and shut off. This will continue until the demand is satisfied and all appliances are shut off.

Sequence of the cascade

To equalize the run time of all appliances on the Cascade, the firing sequence will automatically be changed at set intervals.

For the first 24 hours after initializing the Cascade, the sequence will be changed every hour. After that the sequence will be changed once every 24 hours. The switching on/off sequence will be as follows:

DAY	SWITCHING ON SEQUENCE
Start	L-M1-M2-M3-M4-M5-M6-M7
+ 1 hour	M1-M2-M3-M4-M5-M6-M7-L
+ 2 hour	M2-M3-M4-M5-M6-M7-L-M1

DHW, Night Setback, and Ramp Delay operation with cascade

For indirect DHW operation any boiler(s) in the Cascade can be selected to provide heat for a DHW call. Select a boiler to be designated as the DHW boiler. Connect the tank thermostat or tank sensor to the corresponding terminals on the low voltage connection board. When the boiler receives a DHW call, the Leader control will take that boiler out of the Cascade sequence. If another boiler is available, the Leader will start it up to take its place.

The DHW boiler will adjust its set point to the programmed outlet set point and will adjust its firing rate to maintain this. Once the DHW call has been satisfied, the Leader control will place that boiler back into the Cascade sequence.

Switching of the boiler between DHW operation and SH operation when there is a call for both does not occur. The boiler will provide heat for the DHW demand until it is satisfied.

Night Setback operation of the boilers or water heaters within the Cascade is available. Programming of the Space Heating (SH) Night Setback will be done through the Leader boiler. Refer to the Copper-fin II Service Manual for information regarding Night Setback.

Ramp Delay operation of the boilers as described in the Copper-fin II Service Manual is available when the boilers are part of a Cascade system.

7 Operating information *(continued)*

Sequence of operation

OPERATION	DISPLAY
1. The manual reset high limit must be closed before any action will take place.	HTR: Standby OUT: 123.8F(129)
2. Upon a call for heat the control turns on the appropriate pumps (system and boiler pumps for space heating; DHW pump for DHW call). The flow switch and low water cutoff (if equipped) must close.	HTR: Standby OUT: 123.8F(129)
3. • If the unit is equipped with a proof of closure valve, the proof of closure switch must be closed. The proof of closure valve is then energized. The gas pressure switch(es) (if equipped) must close. • If the contact for the louvers is closed, the louver proving, and auto reset high limit (water heater only) inputs must close. • If the air pressure switch is open, the prepurge cycle then begins by starting the combustion blower. Once started, the air pressure switch must close.	HTR: Standby OUT: 123.8F(129)
4. After prepurge, the blower slows down and the hot surface ignitor (HSI) is energized.	HTR: PREPURGE OUT: 123.9F(129)
5. Once the HSI is hot, the trial for ignition begins with the opening of the gas valve.	HTR: IGNITION OUT: 123.9F(129)
6. If the SMART SYSTEM control does not sense flame, then it will lock out.	HTR: POSTPURGE, LOCKOUT OUT: 123.9F(129)
7. If the SMART SYSTEM control senses flame, it will fire the burner to maintain the set point. The firing rate will stage as required to hold the actual temperature at the set point. If the boiler lights due to a space heating call for heat, and the ramp delay function is active (default is disabled), the staging will be held to a series of increasing limits after the burner has lit.	HTR: RUN STG: 1 OUT: 124.8F(129)
8. If the space heating call for heat is active, and a DHW call for heat becomes active, the control will turn on the DHW pump and then turn off the boiler pump (boiler and DHW pump operation briefly overlap to ensure that flow is maintained throughout the unit). This will divert the hot water away from the heating zone(s) and send it to the DHW tank instead. The control will then modulate to maintain the outlet temperature to the DHW boiler set point.	HTR: DHW STG 123 OUT: 177.8(180)
9. If the DHW call for heat remains active for more than 30 minutes, and the space heating call for heat is also on, then the control will turn on the boiler pump, turn off the DHW pump and resume firing based on the space heating set point (boiler and DHW pump operation briefly overlap to ensure that flow is maintained throughout the unit). As long as both the space heating and DHW calls for heat remain active, the control will switch back and forth between the two modes until one of them is satisfied.	HTR: RUN STG 12 OUT: 123.0F(129)
10. Once both calls for heat are satisfied, the control will turn off the burner. The blower will remain on for the postpurge cycle. Any pumps that are running will continue to run for their respective pump delay times, then turn off.	HTR: POSTPURGE OUT: 127.4F(129)
11. Boiler pump off, system pump continues its delay if longer.	HTR: Standby OUT: 124.7F(129)
12. System pump off.	HTR: Standby OUT: 122.9F(129)

7 Operating information

SMART SYSTEM Copper-fin II control module

Use the control panel (FIG. 7-1) to set temperatures, operating conditions, and monitor appliance operation.

***Figure 7-1**_Control Panel - Operator Interface*

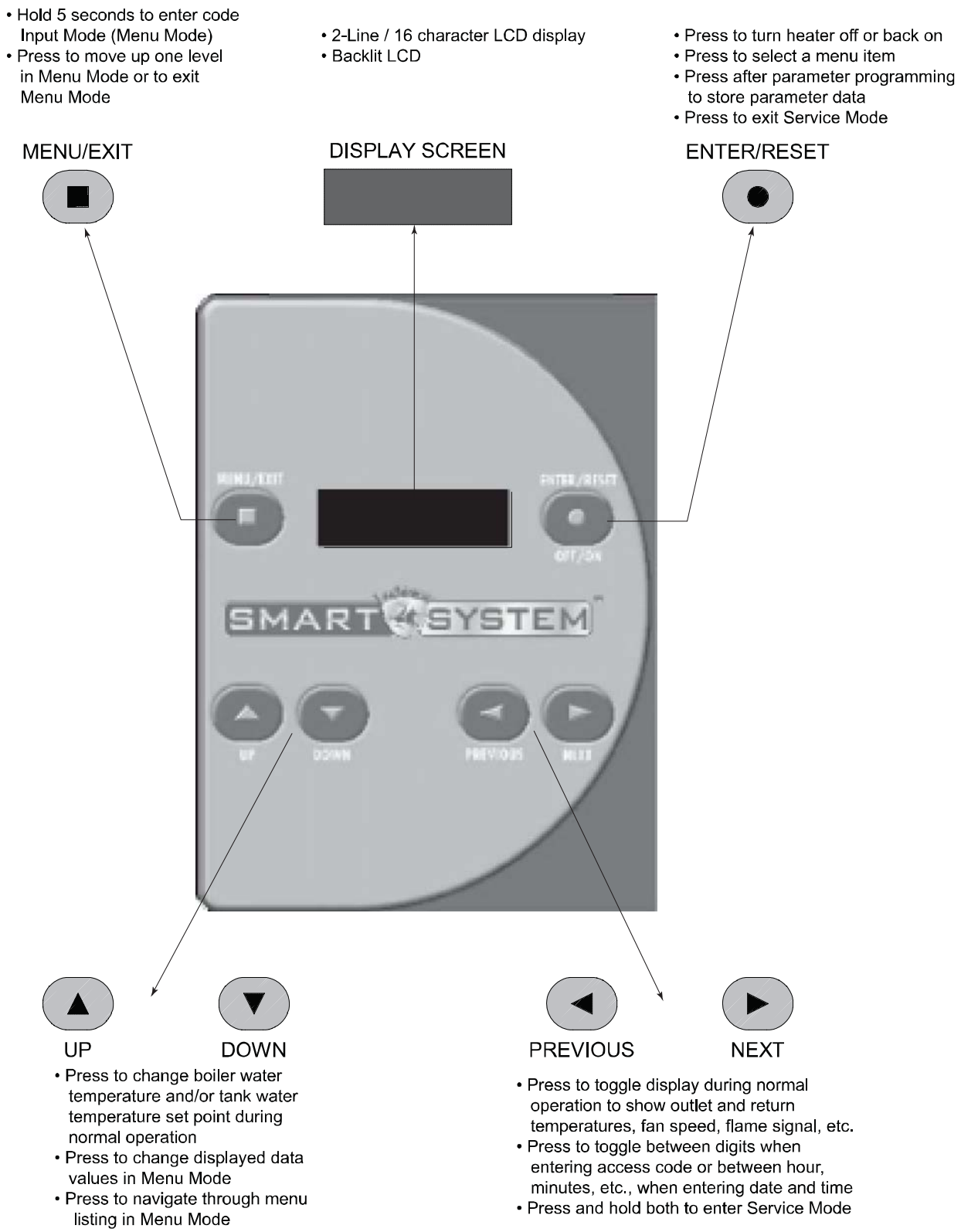

7 Operating information *(continued)*

Access modes

User

The user can adjust the space heating target temperature and the tank target temperature (if a tank sensor is used) by using the UP and DOWN buttons (FIG. 7-1) at any time during normal operation. By entering the USER code (0704), the user can also change temperature units, time and date, and night setback settings. In User Mode, the following parameters can be viewed but not changed:

- Boiler outlet water target temperature in DHW Mode
- Appliance model number
- Software version
- Total operating hours
- Total cycles

Installer

Most parameters are available only to the installer, accessible only by entering the installer access code, see the Copper-fin II Service Manual.

Saving parameters *(reference the Parameter Table in the Copper-fin II Service Manual)*

To save parameters and exit programming:

Press the ENTER/RESET button, then the MENU/EXIT button 3 times.

To keep parameter settings only for a current operating cycle:

Press the MENU/EXIT button 3 times after making all desired parameter changes.

To enter a parameter and continue programming:

Press the MENU/EXIT button 1 time to return to the parameter listings; press again to return to the menu listings. Remember to press the ENTER/RESET button when finished programming in order to save the changes made.

See the Copper-fin II Service Manual for a detailed description of parameters and access modes.

7 Operating information

Status display screens

Status Display Screens		
By using the Previous/Next (◀, ▶) arrow keys on the SMART SYSTEM display panel, you can navigate through the 11 display screens. Each screen will contain two (2) viewable items. The following is a description of the individual items and what they can display:		
Screen #	**Display Shows**	**Description**
Screen #1 Line 1	**HTR: OFF**	The unit has been turned OFF by the Enter/Reset button on the SMART SYSTEM display panel.
	HTR: STAND-BY	The unit has not received a call for heat from a remote thermostat nor has it received a call for heat from a DHW thermostat.
	HTR: SETPOINT MET	The unit has met the water temperature set point, but is still receiving a call for heat from either a remote thermostat, a DHW thermostat, or a BMS.
	HTR: PRE-PURGE	The unit has initiated the pre-purge upon a call for heat.
	HTR: IGNITER * ON	The unit has begun the heatup time prior to the trial for ignition. Display will show IGNITOR A or IGNITOR B depending on which stage has priority.
	HTR: RUN STG ** **Or** **HTR: DHW STG ******	The unit has fired and is running at the displayed number of stages (1,2,3,4)
	HTR: POST-PURGE	The call for heat has been satisfied and the unit runs the fan for an additional post-purge period to clear the combustion chamber and vent system of residual flue products.
	HTR: SERVICE MODE	The unit has been placed in a temporary mode that will allow the unit to fire for the purpose of combustion analysis.
Screen #1 Line 2	**OUT: ***F (***)**	When the outlet sensor has been selected as the control sensor (default), the control will display the outlet temperature as well as the set point in parenthesis.
	OUT: ***F	If the outlet sensor has not been selected as the control sensor or a system supply sensor is connected, only the outlet temperature will be displayed.
	OUT: OPEN	The control does not detect the outlet sensor.
	OUT: SHORTED	The outlet sensor wires or the sensor itself has become shorted.
Press the Next ▶ arrow key on the SMART SYSTEM display to access Screen #2.		

7 Operating information *(continued)*

Status Display Screens *(cont'd)*		
By using the Previous/Next (◀, ▶) arrow keys on the SMART SYSTEM display panel, you can navigate through the 11 display screens. Each screen will contain two (2) viewable items. The following is a description of the individual items and what they can display:		
Screen #	**Display shows:**	**Description**
Screen #2 Line 1	**INLET:** ***F (***)	When the inlet sensor has been selected as the control sensor, the control will display the inlet temperature as well as the set point in parenthesis.
	INLET: ***F	If the inlet sensor has not been selected as the control sensor or a system return sensor is connected, only the inlet temperature will be displayed.
	INLET: OPEN	The control does not detect the inlet sensor.
	INLET: SHORTED	The inlet sensor wires or the sensor itself has become shorted.
Screen #2 Line 2	**RISE:** ***F	The difference between the inlet temperature and the outlet temperature is displayed.
Press the Next ▶ arrow key on the SMART SYSTEM display to access Screen #3.		
Screen #3 Line 1	**SYSSUP:** ***F (***)	When the system supply sensor has been selected as the control sensor, the control will display the system supply temperature as well as the set point in parenthesis.
	SYSSUP: ***F	If the system supply sensor has not been selected as the control sensor, only the system supply temperature will be displayed.
	SYSSUP: OPEN	The control does not detect the system supply sensor.
	SYSSUP: SHORTED	The system supply sensor wires or the sensor itself has become shorted.
Screen #3 Line 2	**SYSRTN:** ***F (***)	When the system return sensor has been selected as the control sensor, the control will display the system return temperature as well as the set point in parenthesis.
	SYSRTN: ***F	If the system return sensor has not been selected as the control sensor, only the system return temperature will be displayed.
	SYSRTN: OPEN	The control does not detect the system return sensor.
	SYSRTN: SHORTED	The system return sensor wires or the sensor itself has become shorted.
Press the Next ▶ arrow key on the SMART SYSTEM display to access Screen #4.		
Screen #4 Line 1	**OUTDOOR:** ***F	The control will display the outdoor air temperature as sensed by the outdoor air sensor.
	OUTDOOR: OPEN	The control does not detect the outdoor air sensor.
	OUTDOOR: SHORTED	The outdoor air sensor wires or the sensor itself has become shorted.
Screen #4 Line 2	**TANK:** ***F	The control will display the tank temperature as sensed by the tank sensor.
	TANK: OPEN	The control does not detect the tank sensor.
	TANK: SHORTED	The tank sensor wires or the sensor itself has become shorted.

7 Operating information

Status Display Screens *(cont'd)*		
By using the Previous/Next (◀, ▶) arrow keys on the SMART SYSTEM display panel, you can navigate through the 11 display screens. Each screen will contain two (2) viewable items. The following is a description of the individual items and what they can display:		
Screen	**Display shows:**	**Description**
Press the Next ▶ arrow key on the SMART SYSTEM display to access Screen #5.		
Screen #5 Line 1	**0 – 10V BMS: **.*V**	The control displays the BMS voltage input from 0 to 10 volts.
Screen #5 Line 2	**STG DEMAND: ******	The control displays the number of stages being called by the control.
Press the Next ▶ arrow key on the SMART SYSTEM display to access Screen #6.		
Screen #6 Line 1	**FAN SPEED: *****	The control will display either OFF, LOW, or HIGH depending upon fan speed requirements of number of stages firing.
Screen #6 Line 2	**0 – 10V RATE: **.*V**	The control will display 0 to 10 volts based upon the number of stages firing.
Press the Next ▶ arrow key on the SMART SYSTEM display to access Screen #7.		
Screen #7 Line 1	**SH CFH: *****	The control will display either ON or OFF based upon a demand (call for heat) for space heating.
Screen #7 Line 2	**WHR CFH: *****	The control will display either ON or OFF based upon a demand (call for heat) for DHW (domestic hot water).
Press the Next ▶ arrow key on the SMART SYSTEM display to access Screen #8.		
Screen #8 Line 1	**SYS PUMP: *****	The control will display either ON or OFF based upon system pump requirements upon demand for space heating.
Screen #8 Line 2	**SYSPUMPSPD: **.*V**	The control will display the 0 – 10V input voltage from the system pump based upon system pump speed.
Press the Next ▶ arrow key on the SMART SYSTEM display to access Screen #9.		
Screen #9 Line 1	**UNIT PUMP: *****	The control will display either ON or OFF based upon unit pump requirements upon demand for space heating.
	UNIT PUMP: DELAY	The control will display delay in unit pump operation after the space heating requirements have been satisfied.
Screen #9 Line 2	**DHW PUMP: *****	The control will display either ON or OFF based upon unit pump requirements upon demand for DHW.
	DHW PUMP: DELAY	The control will display delay in unit pump operation after the DHW requirements have been satisfied.

7 Operating information *(continued)*

Status Display Screens *(cont'd)*		
Operation of the cascade The boiler designated as the Leader will have two additional display screens that can be viewed. These screens will provide information regarding the operation of the Cascade. Each screen will contain two viewable items. The following is a description of the individual items and what they can display:		
Screen	**Display shows:**	**Description**
Press the Next ▶ arrow key on the SMART SYSTEM display to access Screen #10.		
Screen #10 Line 1	**FLM SIG – A: **.* µA**	The control displays the igniter flame signal of igniter A in microamps.
Screen #10 Line 2	**FLM SIG – B: **.* µA**	The control displays the igniter flame signal of igniter B in microamps.
Press the Next ▶ arrow key on the SMART SYSTEM display to access Screen #11.		
Screen #11 Line 1	**IGN * AMPS: *.* A**	The control displays the current of either igniter A or B.
Screen #11 Line 2	**MIX VAL POS: ** %**	The control displays the mixing valve percentage open to the system.

9 Maintenance

Maintenance and annual startup

***Table 9A**_Service and Maintenance Schedules*

Service technician (see the following pages for instructions)	
ANNUAL START-UP	**General:** • Address reported problems • Inspect interior; clean and vacuum if necessary; • Check for leaks (water, gas, flue, condensate) • Examine venting system • Check system water pressure/system piping/expansion tank • Check control settings • Check igniter • Check wiring and connections • Check flue gas passageways • Flame inspection (stable, uniform) • Inspect and clean the burner • Check manifold gas pressure • Perform start-up checkout and performance verification per Section 6 in the Copper-fin II Installation and Operation Manual. **If combustion or performance indicate need:** • Clean heat exchanger with a stiff bristle brush • Remove and clean burners using water. Dry before re-assembling. • Clean the blower wheel with a brush and vacuum. Do not let dirt from cleaning get pulled into the blower.

Owner maintenance (see the Copper-fin II User's Information Manual for instructions)	
Daily	• Check appliance area • Check pressure/temperature gauge
Monthly	• Check vent piping • Check air piping • Check relief valve • Replace combustion air filter **Note:** More frequent replacement may be necessary in dirty environments.
Periodically	• Test low water cutoff (if used) • Reset button (low water cutoff)
Every 6 months	• Check appliance piping (gas and water) for leaks • Operate relief valve
End of season months	• Shut appliance down (unless boiler used for domestic hot water)

9 Maintenance

⚠ WARNING Follow the service and maintenance procedures given throughout this manual and in component literature shipped with the appliance. Failure to perform the service and maintenance could result in damage to the appliance or system. Failure to follow the directions in this manual and component literature could result in severe personal injury, death, or substantial property damage.

⚠ WARNING The appliance should be inspected annually only by a qualified service technician. In addition, the maintenance and care of the appliance designated in Table 9A and explained on the following pages must be performed to assure maximum appliance efficiency and reliability. Failure to service and maintain the appliance and system could result in equipment failure.

⚠ WARNING Electrical shock hazard – Turn off power to the appliance before any service operation on the appliance except as noted otherwise in this instruction manual. Failure to turn off electrical power could result in electrical shock, causing severe personal injury or death.

Address reported problems

1. Inspect any problems reported by the owner and correct before proceeding.

Inspect appliance area

1. Verify that appliance area is free of any combustible materials, gasoline and other flammable vapors and liquids.

Inspect appliance interior

1. Remove the outer access panels and inspect the interior of the appliance.
2. Vacuum any sediment from inside the appliance and components. Remove any obstructions.

Check all piping for leaks

⚠ WARNING Eliminate all system or appliance leaks. Continual fresh makeup water will reduce appliance life. Minerals can build up in sections, reducing heat transfer, overheating heat exchanger, and causing heat exchanger failure. Leaking water may also cause severe property damage.

1. Inspect all water and gas piping and verify to be leak free.
2. Look for signs of leaking lines and correct any problems found.
3. Check gas line using the procedure found in *Section 3 - Gas Connections* of the Copper-fin II Installation and Operation Manual.

Flue vent system and air piping

1. Check for gastight seal at every connection, seam of air piping, and vent piping periodically inspected by a qualified service agency.

⚠ WARNING Venting system must be sealed gastight to prevent flue gas spillage and carbon monoxide emissions, which will result in severe personal injury or death.

Check water system

1. Verify all system components are correctly installed and operational.
2. Check the cold fill pressure for the system. Verify it is correct (must be a minimum of 12 PSI).
3. Watch the system pressure as the boiler heats up (during testing) to ensure pressure does not rise too high. Excessive pressure rise indicates expansion tank sizing or performance problem.
4. Inspect automatic air vents and air separators. Remove air vent caps and briefly press push valve to flush vent. Replace caps. Make sure vents do not leak. Replace any leaking vents.

Check expansion tank

1. Expansion tanks provide space for water to move in and out as the heating system water expands due to temperature increase or contracts as the water cools. Tanks may be open, closed, diaphragm or bladder type. See *Section 4 - Water Connections* of the Copper-fin II Installation and Operation Manual for suggested best location of expansion tanks and air eliminators.

9 Maintenance *(continued)*

Check relief valve

1. Inspect the relief valve and lift the lever to verify flow. Before operating any relief valve, ensure that it is piped with its discharge in a safe area to avoid severe scald potential. Read *Section 4 - Water Connections* of the Copper-fin II Installation and Operation Manual before proceeding further.

⚠ WARNING Safety relief valves should be re-inspected AT LEAST ONCE EVERY THREE YEARS, by a licensed plumbing contractor or authorized inspection agency, to ensure that the product has not been affected by corrosive water conditions and to ensure that the valve and discharge line have not been altered or tampered with illegally. Certain naturally occurring conditions may corrode the valve or its components over time, rendering the valve inoperative. Such conditions are not detectable unless the valve and its components are physically removed and inspected. This inspection must only be conducted by a plumbing contractor or authorized inspection agency – not by the owner. Failure to re-inspect the boiler relief valve as directed could result in unsafe pressure buildup, which can result in severe personal injury, death, or substantial property damage.

⚠ WARNING Following installation, the valve lever must be operated AT LEAST ONCE A YEAR to ensure that waterways are clear. Certain naturally occurring mineral deposits may adhere to the valve, rendering it inoperative. When manually operating the lever, water will discharge and precautions must be taken to avoid contact with hot water and to avoid water damage. Before operating lever, check to see that a discharge line is connected to this valve directing the flow of hot water from the valve to a proper place of disposal. Otherwise severe personal injury may result. If no water flows, valve is inoperative. Shut down the appliance until a new relief valve has been installed.

2. After following the above warning directions, if the relief valve weeps or will not seat properly, replace the relief valve. Ensure that the reason for relief valve weeping is the valve and not over-pressurization of the system due to expansion tank waterlogging or undersizing.

Inspect/replace hot surface igniter

This unit uses a proven SMART SYSTEM control module and a hot surface igniter. The SMART SYSTEM control module is not repairable. Any modification or repairs will invalidate the warranty.

⚠ WARNING Do not attempt to repair a faulty hot surface igniter or control module. Any modification or repairs may create hazardous conditions that result in property damage, personal injury, fire, explosion and/or toxic gases.

A faulty hot surface igniter or control module must be replaced with an identical part. A specification igniter and control module for this specific unit is available from your local distributor. **Do not use general purpose field replacement control modules or igniters.**

Ignition system checkout

1. Turn off gas supply to unit.
2. Turn electric power on.
3. Adjust the set point on the temperature control to a setting above water temperature or to the highest safe setting.
4. The igniter will cycle on trial for ignition.
5. The control module will lock out and turn the alarm light on.
6. Adjust the Set Point Differential and High-Fire Offset to the desired settings.
7. Turn on gas supply.
8. Press the RESET button at the electronic display panel to reset the control module.
9. If ignition system fails to operate properly, repair work must be performed by a qualified service person or installer.

Check all wiring

1. Inspect all wiring, making sure wires are in good condition and securely attached.

Check control settings

1. Set the SMART SYSTEM control module display to Parameter Mode and check all settings. See Section 1 of this manual. Adjust settings if necessary. See Section 1 of this manual for adjustment procedures.
2. Check settings of external limit controls (if any) and adjust if necessary.

9 Maintenance

Perform start-up and checks

1. Start appliance and perform checks and tests specified in *Section 7 - Start-up* of the Copper-fin II Installation and Operation Manual.
2. Verify cold fill pressure is correct and that operating pressure does not go too high.

Check burner flame

Visually check main burner flames at each start-up after long shutdown periods or at least every six months. A burner viewport is located on the burner mounting flange.

⚠ WARNING The area around the burner viewport is hot and direct contact could result in burns.

***Figure 9-2**_Flame Pattern Illustration*

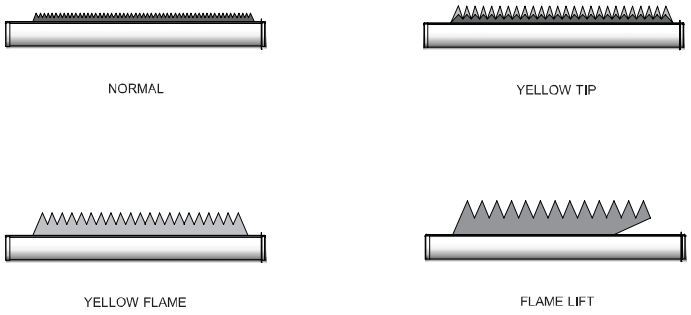

Normal Flame: A normal flame at 100% of burner input is blue, with slight yellow tips, a well defined flame and no flame lifting.

Yellow Tip: Yellow tipping can be caused by blockage or partial obstruction of air flow to the burner.

Yellow Flames: Yellow flames can be caused by blockage of primary air flow to the burner or excessive gas input. This condition MUST be corrected immediately.

Lifting Flames: Lifting flames can be caused by over firing the burner, excessive primary air or high draft.

If improper flame is observed, examine the venting system, ensure proper gas supply and adequate supply of combustion and ventilation air.

Check flue gas passageways

Any sign of soot around the inner jacket, outer jacket, flue pipe connections, burner or in the areas between the fins on the copper heat exchanger indicates a need for cleaning. The following cleaning procedure must only be performed by a qualified serviceman or installer. Proper service is required to maintain safe operation. Properly installed and adjusted units seldom need flue cleaning.

NOTICE All gaskets/sealants on disassembled components or jacket panels must be replaced with new gaskets/sealants on reassembly. Gasket and sealant kits are available from your distributor.

⚠ CAUTION When a Category IV vent system is disconnected for any reason, the flue must be reassembled and resealed according to the vent manufacturer's instructions.

Inspect and clean burner

1. Turn off main power to unit.
2. Turn off main manual gas shutoff to unit.
3. Remove the front outer jacket panels.
4. Disconnect manifold from gas train using union(s) just below each gas valve(s).
5. Remove mounting screws from manifold mounting brackets. Pull the manifold/orifice assembly away from burners. Repeat for each manifold assembly.
6. Remove two mounting screws from burner and slide burner out toward front of unit. Use caution to prevent damage to burners, refractory, hot surface igniter or wiring.
7. Remove soot from burners with a stiff bristle brush.

   Dirt may be removed from burner ports by rinsing the burner thoroughly with water. Drain and dry burners before re-installing. Damaged burners must be replaced.

When installed in a dusty and dirty location, the burners may require cleaning on a 3 to 6 month schedule or as needed, based on severity of contamination. Contaminants can be drawn in with the combustion air. Non combustible particulate matter such as dust, dirt, concrete dust or dry wall dust can block burner ports and cause non-warrantable failure. The standard inlet air filter will help eliminate dust and dirt from entering the unit. Use extreme care when operating a unit for temporary heat during new construction. The burners could require a thorough cleaning before the unit is placed in service.

9 Maintenance *(continued)*

Inspect and clean the heat exchanger

1. While burners are removed, check the heat exchanger surface for sooting. If present, heat exchanger must be cleaned and problem corrected. Proceed as follows.
2. Remove gas manifold(s)/orifice assemblies as described in steps 1 through 5 in Burner Removal and Cleaning, page 74.
3. Disconnect wiring from the hot surface igniter and hose from the burner pressure tap.
4. Remove inner jacket panel mounting screws and slide door assembly out toward front of the unit. Use caution to prevent damage to the refractory and hot surface igniter.
5. Check "V" baffles and frame runners along front and back edges of heat exchanger. Remove and clean if necessary.
6. Remove soot from heat exchanger with a stiff bristle brush. Use a vacuum to remove loose soot from surfaces and inner chamber.
7. The heat exchanger can be removed by sliding towards the front of the unit. Once the heat exchanger is removed from the unit, a garden hose can be used to wash the tubes to ensure that all soot is removed from the heat exchanger surfaces. Note: Do not wet the unit's refractory.
8. Ensure that all burner ports are cleaned to remove any soot. See Burner Removal and Cleaning, page 74.
9. Carefully reinstall the heat exchanger, "V" baffles, and frame runners if removed from the unit. Note: Make sure frame runners seal securely where they contact the front and rear compartment refractory.
10. Carefully reinstall inner jacket panels, burners, manifolds, wires and hoses. Use new gasket material to ensure a proper air seal.
11. Reassemble all gas and water piping. Test for gas leaks.

NOTICE Upon completion of any testing on the gas system, leak test all gas connections with a soap and water solution while main burners are operating. Do not spray soap and water solution on the SMART SYSTEM control module housing. The use of an excessive amount of soap and water solution can damage the control. Immediately repair any leak found in the gas train or related components. Do not operate an appliance with a leak in the gas train, valves, or related piping.

12. Reassemble outer jacket panels.
13. Cycle unit and check for proper operation.

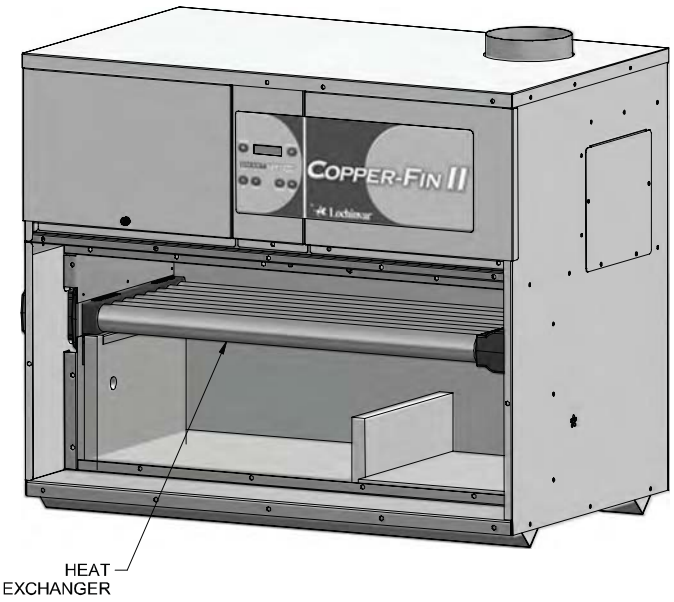

***Figure 9-3**_Location of the Heat Exchanger Inside Jacket*

Review with owner

1. Review the Copper-fin II User's Information Manual with the owner.
2. Emphasize the need to perform the maintenance schedule specified in the Copper-fin II User's Information Manual (and in this manual as well).
3. Remind the owner of the need to call a licensed contractor should the appliance or system exhibit any unusual behavior.
4. Remind the owner to follow the proper shutdown procedure and to schedule an annual start-up at the beginning of the next heating season.

Oiled bearing circulators

Inspect the pump every six (6) months and oil as necessary. Use SAE 30 non-detergent oil or lubricant specified by the pump manufacturer.

COMMERCIAL PUMPS

Series 4300, 4360 & 4380 Vertical In-Line Pumps

INTRODUCTION

This document contains specific information regarding the safe installation, operating and maintenance of Vertical In-Line pumps and should be read and understood by installing, operating and maintenance personnel. The equipment supplied has been designed and constructed to be safe and without risk to health and safety when properly installed, operated and maintained. The instructions following must be strictly adhered to. If clarification is needed on any point please contact Armstrong quoting the equipment serial number.

WARNING SYMBOLS

Safety instruction where an electrical hazard is involved.

Safety instruction where non-compliance would affect safety risk.

Safety instruction relating to safe operation of the equipment. (ATTENTION)

INSTRUCTIONS FOR SAFE USE

No installation of this equipment should take place unless this document has been studied and understood. Handling, transportation and installation of this equipment should only undertaken by trained personnel with proper use of lifting equipment. See later diagrams for lifting advice. Refer to the pump nameplate for pump speed, pressure and temperature limitations. The limits stated must not be exceeded without written permission from Armstrong.

TEMPERATURE

Where under normal operating conditions the limit of 68°C/155°F (Restricted Zone) for normal touch, or 80°C/176°F (Unrestricted Zone) for unintentional touch, may be experienced, steps should be taken to minimize contact or warn operators/users that normal operating conditions will be exceeded. In certain cases where the temperature of the pumped liquid exceeds the above stated temperature levels, pump casing temperatures may exceed 100°C/212°F and not withstanding pump insulation techniques appropriate measures must be taken to minimize risk for operating personnel.

NOISE LEVELS

Typical Pumping Unit Sound Pressure Level, Decibels, A-Weighted, at 1 m (3 ft.) from unit.

	1200 rpm				1800 rpm				3600 rpm			
Frame	ODP		TEFC		ODP		TEFC		ODP		TEFC	
Designation	hp	dB-A	hp	dB-A	hp	dB-A	hp	dB-A	hp	dB-A	hp	dB-A
140	0.75 - 1	59	0.75 - 1	58	1 - 3	64	1 - 2	64	1.5 - 3	70	1.5 - 2	79
180	1.5 - 2	61	1.5 - 2	61	3 - 5	66	3 - 5	68	5 - 7.5	74	3 - 5	82
210	3 - 5	66	3 - 5	65	7.5 - 10	70	7.5 - 10	73	10 - 15	76	7.5 - 10	85
250	7.5 - 10	70	7.5 - 10	69	15 - 20	74	15 - 20	78	20 - 25	78	15 - 20	88
280	15 - 20	75	15 - 20	74	25 - 30	74	25 - 30	82	30 - 40	80	25 - 30	89
320	25 - 30	77	25 - 30	77	40 - 50	78	40 - 50	83	50 - 60	83	40 - 50	94
360	40 - 50	80	40 - 50	80	60 - 75	80	60 - 75	89	75 - 100	88	60 - 75	95
400	60 - 75	82	60 - 75	84	100 - 125	83	100	92	125 - 150	92	100	96
440	100 - 125	85	100 - 125	88	150 - 200	87	125 - 150	96	200 - 250	95	125 - 150	98

*Select Armstrong Installation & Operation (I&O) Guides are now posted in our Wiki site. Visit the Armstrong Wiki site at H*http://www.armstrongpumps.com/wiki.html*H and share your ideas on best practices for the installation and operation of Armstrong products.*

OPERATION

5. STARTING PUMP

- Ensure that the pump turns freely by hand, or with some gentle mechanical help such as a strap or Allen key in coupling bolt.
- Ensure that all protective guarding is securely fixed in position.
- The pump must be fully primed on start up. Fill the pump casing with liquid and rotate the shaft by hand to remove any air trapped in the impeller. On Series 4300 any air trapped in the casing as the system is filled must be removed by the manual air vent in the seal flush line. **ENSURE ENTRAINED AIR IS REMOVED FROM SERIES 4300 PUMPS, PRIOR TO STARTING, THROUGH THE AIR VENT ON THE SEAL FLUSH LINE – OPEN VENT UNTIL CLEAR OF AIR**. Series 4360 & 4380 units are fitted with seal flush/vent lines piped to the pump suction area. When these units operate residual air is drawn out of the pump towards the suction piping.
- "Bump" or energize the motor momentarily and check that the rotation corresponds with the directional arrow on the pump casing.
- To reverse rotation of a three phase motor, interchange any two power leads.
- Start the pump with the discharge valve closed and the suction valve open, then gradually open the discharge valve when the motor is at operating speed. The discharge valve may be "cracked" or open slightly at start up to help eliminate trapped air.
- When stopping the pump: Close the discharge valve and de-energize the motor.
- DO NOT run the pump against a closed discharge valve for an extended period of time. (A few minutes maximum)
- Star-Delta motor starters should be fitted with electronic/mechanical interocks that have a timed period of no more than 40 mili-seconds before switching from star (Starting) to delta (Run) connection yet allow the motor to reach full star (Starting) speed before switching to delta (Run).
- Should the pump be noisy or vibrate on start-up a common reason is overstated system head. Check this by calculating the pump operating head by deducting the suction pressure gauge value from the discharge gauge reading. Convert the result into the units of the pump head as stated on the pump nameplate and compare the values. Should the actual pump operating head be significantly less than the nameplate head value it is typically permissable to throttle the discharge isolation valve until the actual operating head is equal to the nameplate value. Any noise or vibration usually disappears. The system designer or operator should be made aware of this soon as some adjustment may be required to the pump impeller diameter or drive settings, if applicable, to make the pump suitable for the system as installed.

CAUTION:
Check rotation arrow prior to operating the unit. The rotation of all Armstrong Vertical In-Line units is "clockwise" when viewed from the drive end. (Looking from on top of / behind the motor)

6. GENERAL CARE

- Vertical In-Line pumps are built to operate without periodic maintenance, other than motor lubrication on larger units. A systematic inspection made at regular intervals, will ensure years of trouble-free operation, giving special attention to the following:
  - Keep unit clean
  - Provide the motor with correctly sized overload protection
  - Keep moisture, refuse, dust or other loose particles away from the pump and ventilating openings of the motor.
  - Avoid operating the unit in overheated surroundings (Above 100ºF/40ºC).

WARNING:
Whenever any service work is to be performed on a pumping unit, disconnect the power source to the driver, LOCK it OFF and tag with the reason. Any possibility of the unit starting while being serviced must be eliminated.

- If mechanical seal environmental accessories are installed, ensure water is flowing through the sight flow indicator and that filter cartridges are replaced as recommended. (See Armstrong files 43.85 & 43.86 for seal environmental instructions).

7. LUBRICATION

Pump

- Lubrication is not required. There are no bearings in the pump that need external lubrication service.
- Large Series 4300 units are installed with a shaft bushing located beneath the impeller that is lubricated from the pump discharge. This bearing is field removable for service on the 20x20x19 size without disturbing the motor or other major pump components.
- Service instructions for the lower bearing is to be found on File No: 43.805.

Motor

- Follow the lubrication procedures recommended by the motor manufacturer. Many small and medium sized motors are permanently lubricated and need no added lubrication. Generally if there are grease fittings evident the motor needs periodic lubrication. None if not.
- Check the lubrication instructions supplied with the motor for the particular frame size indicated on the motor nameplate.

Mechanical Seal

- Mechanical seals require no special attention. The mechanical seal is fitted with a flush line. The seal is flushed from discharge of the pump casing on Series 4300 pumps and is flushed/vented to the suction on close coupled pumps, Series 4360 & 4380.
- The Series 4300 pump is flushed from the pump discharge because the mechanical seal chamber is isolated from the liquid in the pump by a throttle bushing. Because the seal chamber is isolated, seal environmental controls such as filters and separators, when installed in the Series 4300 flush line are very effective, as only the seal chamber needs cleansing, and will prolong seal life in HVAC systems.
- Do not run the pump unless properly filled with water as the mechanical seals need a film of liquid between the faces for proper operation.
- Mechanical seals may 'weep' slightly at start-up. Allow the pump to continue operating for several hours and the mechanical seal to 'seat' properly prior to calling for service personnel.
- The following Armstrong files are available for mechanical seal replacement instructions:
  - Series 4360 & 4380: File 43.81
  - Series 4300: P-Base and TCZ Motor Frames – File 43.84
    TC Motor Frame – File 43.88

8. SYSTEM CLEANLINESS

- Before starting the pump the system must be thoroughly cleaned, flushed and drained and replenished with clean liquid.
- Welding slag and other foreign materials, "Stop Leak" and cleaning compounds and improper or excessive water treatment are all detrimental to the pump internals and sealing arrangement.
- Proper operation cannot be guaranteed if the above conditions are not adhered to.

NOTE:

Particular care must be taken to check the following before the pump is put into operation:

A. Pump primed?
B. Rotation OK?
C. Lubrication OK?
D. Pipe work properly supported?
E. Voltage supply OK?
F. Overload protection OK?
G. Is the system clean?
H. Is the area around the pump clean?

WARRANTY

Does not cover any damages to the equipment resulting from failure to observe the above precautions. Refer to Armstrong General Terms and Warranty sheet. Contact your local Armstrong representative for full information.

CR, CRI, CRN, CRT

Installation and operating instructions

US

CONTENTS

	Page
Shipment inspection	**5**
Understanding nameplate data	**6**
Understanding codes	7
Confirming proper application	**8**
Checking operating conditions	**8**
Installing the pump	**10**
Pump location	10
Foundation	10
Pump mounting	11
Check valves	13
Electrical	14
Motor	14
Starting the pump the first time	**14**
Preventative pump maintenance	**16**
Maintaining the pump's motor	16
Motor Lubrication	16
Lubrication Procedure	17
Replacing the motor	**17**
Parts List	**19**
Spare Parts	**19**
Preliminary electrical tests	**20**
Startup for Cool-Top®	**21**
Diagnosing specific problems	**22**
Worksheet for three-phase motors	**24**

Warning

Electrical Work: All electrical work should be performed by a qualified electrician in accordance with the latest edition of the National Electrical Code, local codes and regulations.

Warning

Shock Hazard: A faulty motor or wiring can cause electrical shock that could be fatal, whether touched directly or conducted through standing water. For this reason, proper grounding of the pump to the power supply's grounding terminal is required for safe installation and operation.

In all installations, the above-ground metal plumbing should be connected to the power supply ground as described in Article 250-80 of the National Electrical Code.

1. General

The CR range is based on the inline multistage centrifugal pump first pioneered by Grundfos. CR is available in four basic materials and over one million configurations. CR is suitable for pumping water and water-like liquids in industry, petrochemical, water treatment, commercial buildings, and many other applications. Some of CR's outstanding characteristics are:

- superior efficiency
- reliability
- ease of maintenance
- compact size and small footprint
- quiet operation.

2. Shipment inspection

Examine the components carefully to make sure no damage has occurred to the pump during shipment. Care should be taken to ensure the pump is NOT dropped or mishandled.

2.1 Ensure you have the right pump

US

Read the pump nameplate to make sure that it is the one you ordered.

- **CR**
  Centrifugal pump with standard cast iron and 304 stainless steel construction
- **CRI**
  Centrifugal pump; all parts in contact with water are 304 stainless steel construction
- **CRN**
  Centrifugal pump; all parts in contact with water are 316 stainless steel construction
- **CRT**
  Centrifugal pump; all parts in contact with water are titanium construction
- **CRE**
  Centrifugal pump with a Grundfos MLE VFD motor attached.

2.2 Checking the condition of the pump

The shipping carton in which your pump arrived is specially designed around your pump during production to prevent damage during shipment. As a precaution, the pump should remain in the carton until you are ready to install it. Examine the pump for any damage that may have occurred during shipping. Examine any other parts of the shipment as well for any visible damage.

Note: If the pump is shipped as a complete unit (motor attached to pump end), the position of the coupling (that connects the pump shaft to the motor shaft) is set at factory specifications. No adjustment is required. If the unit is delivered as a pump end only, follow the adjustment procedures in the section on replacing the motor.

Pump without Motor (CR(I)(N) 1s, 1, 3, 5, 10, 15, and 20 Only): If you purchased a pump without a motor, the shaft seal has been set by the factory. Do not loosen the three set screws on the shaft seal when attaching the motor.

Pump without Motor (CR(N) 32, 45, 64, 90, 120, and 150 Only): If you purchased a pump without a motor, you must install the seal. The seal is protected in its own sub boxing within the pump packaging crate. To protect the shaft and bearings during shipment, a shaft holder protective device is used. This device must be removed prior to installation of the seal. Read the seal installation instructions which are included in the pump package.

2.3 Verifying electrical requirements

Verification of the electrical supply should be made to be certain the voltage, phase and frequency match that of the pump motor. The proper operating voltage and other electrical information can be found on the motor nameplate. These motors are designed to run on –10 % / + 10 % of the nameplate-rated voltage. For dual-voltage motors, the motor should be internally connected to operate on the voltage closest to the 10% rating, i.e., a 208 voltage motor wired per the 208 volt connection diagram. The wiring connection diagram can be found on either a plate attached to the motor or on a diagram inside the terminal box cover. If voltage variations are larger than –10 % / + 10 %, do not operate the pump.

US

8. Preventative pump maintenance

At regular intervals depending on the conditions and time of operation, the following checks should be made:

1. Pump meets required performance and is operating smoothly and quietly.
2. There are no leaks, particularly at the shaft seal.
3. The motor is not overheating.
4. Remove and clean all strainers or filters in the system.
5. Verify the tripping of the motor overload protection.
6. Check the operation of all controls. Check unit control cycling twice and adjust, if necessary.
7. If the pump is not operated for unusually long periods, the unit should be maintained in accordance with these instructions. In addition, if the pump is not drained, the pump shaft should be manually rotated or run for short periods of time at monthly intervals.
8. To extend the pump life in severe duty applications, consider performing one of the following actions:
   – Drain the pump after each use.
   – Flush the pump, through system, with water or other fluid that is compatible with the pump materials and process liquid.
   – Disassemble the pump liquid components and thoroughly rinse or wash them with water or other fluid that is compatible with the pump materials and process liquid.

If the pump fails to operate or there is a loss of performance, refer to *Section 15. Diagnosing specific problems*.

9. Maintaining the pump's motor

Warning

Do not touch electrical connections before you first ensure that power has been disconnected. Electrical shock can cause serious or fatal injury. Only qualified personnel should attempt installation, operation, and maintenance of this equipment.

9.1 Motor Inspection

Inspect the motor at regular intervals, approximately every 500 hours of operation or every three months, whichever occurs first. Keep the motor clean and the ventilation openings clear.

The following steps should be performed at each inspection:

1. Check that the motor is clean. Check that the interior and exterior of the motor is free of dirt, oil, grease, water, etc. Oily vapor, paper, pulp, textile lint, etc. can accumulate and block motor ventilation. If the motor is not properly ventilated, overheating can occur and cause early motor failure.
2. Use an Ohmmeter ("Megger") periodically to ensure that the integrity of the winding insulation has been maintained. Record the Ohmmeter readings. Immediately investigate any significant drop in insulation resistance.
3. Check all electrical connectors to be sure that they are tight.

9.2 Motor Lubrication

Electric motors are pre-lubricated at the factory and do not require additional lubrication at start-up. Motors without external grease fittings have sealed bearings that cannot be re-lubricated. Motors with grease fittings should only be lubricated with approved types of grease. Do not over-grease the bearings. Over-greasing will cause increased bearing heat and can result in bearing/motor failure. Do not mix petroleum grease and silicon grease in motor bearings.

Bearing grease will lose its lubricating ability over time, not suddenly. The lubricating ability of a grease (over time) depends primarily on the type of grease, the size of the bearings, the speed at which the bearings operate and the severity of the operating conditions.

Good results can be obtained if the following recommendations are used in your maintenance program. It should also be noted that pumps with more stages, pumps running to the left of the performance curve, and certain pump ranges may have higher thrust loads. Pumps with high thrust loads should be greased according to the next service interval level.

9.3 Recommended lubricant

Severity of service	Ambient temp. (max.)	Environment	Approved types of grease
Standard	+104 °F (+40 °C)	Clean, little corrosion	Grundfos ML motors are greased for life or will have the grease type on the nameplate. Baldor motors are greased with Polyrex EM (Exxon Mobile).
Severe	+122 °F (+50 °C)	Moderate dirt, corrosion	
Extreme	>122 °F (+50°C) or Class H insulation	Severe dirt, abrasive dust, corrosion	

Note: If pump is fitted with a bearing flange that requires grease, see the stickers on either the bearing flange or coupling guards for proper grease type and greasing schedule.

9.4 Motor lubrication schedule (for motors with grease nipples)

New motors that have been stored for a year or more should be regreased according to the following:

NEMA (IEC) Frame Size	Standard Service Interval	Severe Service Interval	Extreme Service Interval	Weight of grease to add [oz (grams)]	Volume of grease to add [in^3 (teaspoons)]
Up through 210 (132)	5500 hrs	2750 hrs	550 hrs	0.30 (8.4)	0.6 (2)
Over 210 through 280 (180)	3600 hrs	1800 hrs	360 hrs	0.61 (17.4)*	1.2 (3.9)
Over 280 up through 360 (225)	2200 hrs	1100 hrs	220 hrs	0.81 (23.1)*	1.5 (5.2)
Over 360 (225)	2200 hrs	1100 hrs	220 hrs	2.12 (60.0)*	4.1 (13.4)

Warning

The grease outlet plug MUST be removed before adding new grease.

9.5 Lubrication Procedure

Caution

To avoid damage to motor bearings, grease must be kept free of dirt. For an extremely dirty environment, contact Grundfos, the motor manufacturer, or an authorized service center for additional information.

Mixing dissimilar grease is not recommended.

1. Clean all grease fittings. If the motor does not have grease fittings, the bearing is sealed and cannot be greased externally.
2. If the motor is equipped with a grease outlet plug, remove it. This will allow the old grease to be displaced by the new grease. If the motor is stopped, add the recommended amount of grease. If the motor is to be greased while running, a slightly greater quantity of grease will have to be added. **Note:** If new grease does not appear at the shaft hole or grease outlet plug, the outlet passage may be blocked. At the next service interval the bearings must be repacked.
3. Add grease SLOWLY taking approximately one minute until new grease appears at the shaft hole in the endplate or grease outlet plug. Never add more than 1-1/2 times the amount of grease shown in the lubrication schedule.
4. For motors equipped with a grease outlet plug, let the motor run for 20 minutes before replacing the plug.

10. Replacing the motor

If the motor is damaged due to bearing failure, burning or electrical failure, the following instructions detail how to remove the motor for replacement.

Caution

It must be emphasized that motors used on CR pumps are specifically selected to our rigid specifications. Replacement motors must be of the same frame size, should be equipped with the same or better bearings and have the same service factor. Failure to follow these recommendations may result in premature motor failure.

10.1 Disassembly

For disassembly, proceed as follows:

1. Turn off and lock out power supply. The power supply wiring can now be safely disconnected from the motor wires. Remove the coupling guards. **Note:** CR 1s, 1, 3, 5, 10, 15, and 20: do not loosen the three shaft seal securing allen screws.
2. Using the proper metric Allen wrench, loosen the four cap screws in the coupling. Completely remove coupling halves. On CR1s-CR20, the shaft pin can be left in the pump shaft. CR(N)32, 45, 64, 90, 120, and 150 do not have a shaft pin.
3. With the correct size wrench, loosen and remove the four bolts which hold the motor to the pump end.
4. Lift the motor straight up until the shaft has cleared the motor stool.

10.2 Assembly

For assembly, proceed as follows:

1. Remove key from motor shaft, if present, and discard.
2. Thoroughly clean the surfaces of the motor and pump end mounting flange. The motor and shaft must be clean of all oil/ grease and other contaminants where the coupling attaches. Set the motor on the pump end.
3. Place the terminal box in the desired position by rotating the motor.
4. Insert the mounting bolts, then diagonally and evenly tighten:
   – for 3/8” bolts (1/2 to 2 hp), torque to 17 ft-lb
   – for 1/2” bolts (3 to 40 hp) torque to 30 ft-lb
   – for 5/8” bolts (50 - 100 hp) torque to 59 ft-lb
   – follow instructions for particular pump model in sections *10.2.1 Torque specifications for CR 1s, 1, 3, and 5* through *10.2.4 CR(N) 32, 45, 64, 90, 120, and 150*.

US

15. Diagnosing specific problems

Problem		Possible cause	Remedy
The pump does not run.	1.	No power at motor.	Check voltage at motor terminal box. If no voltage at motor, check feeder panel for tripped circuits and reset circuit.
	2.	Fuses are blown or circuit breakers are tripped.	Turn off power and remove fuses. Check for continuity with ohmmeter. Replace blown fuses or reset circuit breaker. If new fuses blow or circuit breaker trips, the electrical installation, motor and wires must be checked.
	3.	Motor starter overloads are burned or have tripped out.	Check for voltage on line and load side of starter. Replace burned heaters or reset. Inspect starter for other damage. If heater trips again, check the supply voltage and starter holding coil.
	4.	Starter does not energize.	Energize control circuit and check for voltage at the holding coil. If no voltage, check control circuit fuses. If voltage, check holding coil for shorts. Replace bad coil.
	5.	Defective controls.	Check all safety and pressure switches for operation. Inspect contacts in control devices. Replace worn or defective parts or controls.
	6.	Motor is defective.	Turn off power and disconnect wiring. Measure the lead to lead resistances with ohmmeter (RX-1). Measure lead to ground values with ohmmeter (RX-100K). Record measured values. If an open or grounded winding is found, remove motor and repair or replace.
	7.	Defective capacitor (single-phase motors).	Turn off power and discharge capacitor. Check with ohmmeter (RX-100K). When the meter is connected to the capacitor, the needle should jump towards 0 ohms and slowly drift back to infinity (∞). Replace if defective.
	8.	Pump is bound.	Turn off power and manually rotate pump shaft. If shaft does not rotate easily, check coupling setting and adjust as necessary. If shaft rotation is still tight, remove pump and inspect. Disassemble and repair.
The pump runs but at reduced capacity or does not deliver water.	1.	Wrong rotation.	Check wiring for proper connections. Correct wiring.
	2.	Pump is not primed or is airbound.	Turn pump off, close isolation valve(s), remove priming plug. Check fluid level. Refill the pump, replace plug and start the pump. Long suction lines must be filled before starting the pump.
	3.	Strainers, check or foot valves are clogged.	Remove strainer, screen or valve and inspect. Clean and replace. Reprime pump.
	4.	Suction lift too large.	Install compound pressure gauge at the suction side of the pump. Start pump and compare reading to performance data. Reduce suction lift by lowering pump, increase suction line size or removing high friction loss devices.
	5.	Suction and/or discharge piping leaks.	Pump spins backwards when turned off. Air in suction pipe. Suction pipe, valves and fittings must be airtight. Repair any leaks and retighten all loose fittings.
	6.	Pump worn.	Install pressure gauge, start pump, gradually close the discharge valve and read pressure at shutoff. Convert measured pressure (in psi) to head (in feet): (Measured psi x 2.31 ft/psi = ___ ft). Refer to the specific pump curve for shutoff head for that pump model. If head is close to curve, pump is probably OK. If not, remove pump and inspect.
	7.	Pump impeller or guide vane is clogged.	Disassemble and inspect pump passageways. Remove any foreign materials found.
	8.	Incorrect drain plug is installed.	If the proper drain plug is replaced with a standard plug, water will recirculate internally. Replace with proper plug.
	9.	Improper coupling setting.	Check/reset the coupling; see page 18.

Problem		Possible cause	Remedy
Pump cycles too much	1.	Pressure switch is not properly adjusted or is defective.	Check pressure setting on switch and operation. Check voltage across closed contacts. Readjust switch or replace if defective.
	2.	Level control is not properly adjusted or is defective.	Check setting and operation. Readjust setting (refer to level control manufacturer's data). Replace if defective.
	3.	Insufficient air charging or leaking tank or piping.	Pump air into tank or diaphragm chamber. Check diaphragm for leak. Check tank and piping for leaks with soap and water solution. Check air to water volume. Repair as necessary.
	4.	Tank is too small.	Check tank size and air volume in tank. Tank volume should be approximately 10 gallons for each gpm of pump capacity. The normal air volume is 2/3 of the total tank volume at the pump cut-in pressure. Replace tank with one of correct size.
	5.	Pump is oversized.	Install pressure gauges on or near pump suction and discharge ports. Start and run pump under normal conditions, record gauge readings. Convert psi to feet (Measured psi x 2.31 ft/psi = ____ ft) Refer to the specific pump curve for that model, ensure that total head is sufficient to limit pump delivery within its design flow range. Throttle pump discharge flow if necessary.
Fuses blow or circuit breakers or overload relays trip	1.	Tank is too small.	Check voltage at starter panel and motor. If voltage varies more than –10 % / + 10 %, contact power company. Check wire sizing.
	2.	Motor overloads are set too low.	Cycle pump and measure amperage. Increase heater size or adjust trip setting to a maximum of motor nameplate (full load) current.
	3.	Three-phased current is imbalanced.	Check current draw on each lead to the motor. Must be within –5 % / + 5 %. If not, check motor and wiring. Rotating all leads may eliminate this problem.
	4.	Motor is shorted or grounded.	Turn off power and disconnect wiring. Measure the lead-to-lead resistance with an ohmmeter (RX-1). Measure lead-to-ground values with an ohmmeter (RX-100K) or a megaohm meter. Record values. If an open or grounded winding is found, remove the motor, repair and/or replace.
	5.	Wiring or connections are faulty.	Check proper wiring and loose terminals. Tighten loose terminals. Replace damaged wire.
	6.	Pump is bound.	Turn off power and manually rotate pump shaft. If shaft does not rotate easily, check coupling setting and adjust as necessary. If shaft rotation is still tight, remove pump and inspect. Disassemble and repair.
	7.	Defective capacitor (single-phase motors).	Turn off power and discharge capacitor. Check with ohmmeter (RX-100K). When the meter is connected to the capacitor, the needle should jump towards 0 ohms and slowly drift back to infinity (∞). Replace if defective.
	8.	Motor overloads at higher ambient temperature than motor.	Use a thermometer to check the ambient temperature near the overloads and motor. Record these values. If ambient temperature at motor is lower than at overloads, especially where temperature at overloads is above +104 °F (+40 °C), ambient-compensated heaters should replace standard heaters.

ALFA LAVAL

omd oliver m. dean, inc.
800-648-3326
www.omdean.com

Plate Heat Exchanger

Operational and Maintenance Manual

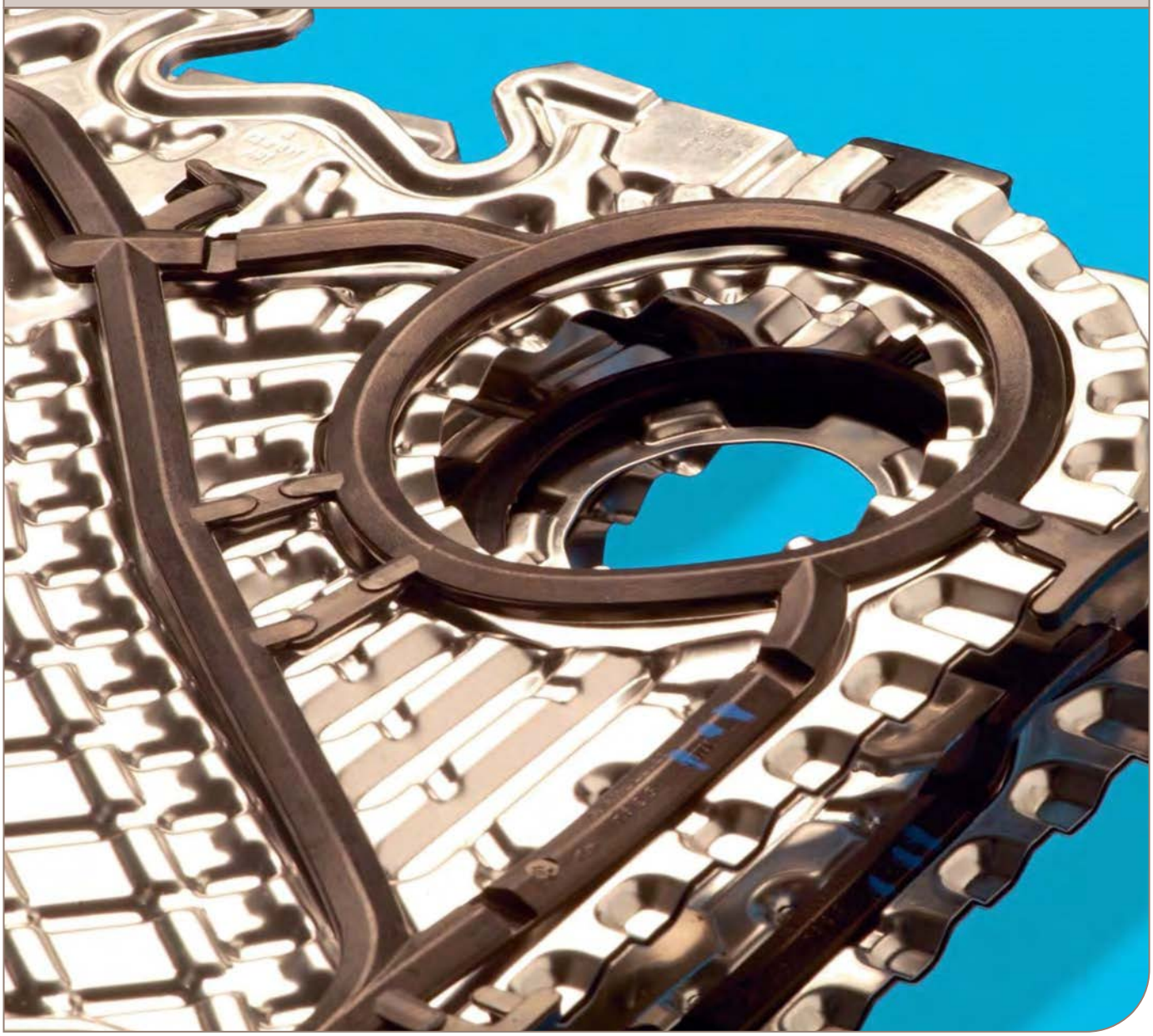

NOTICE

TO AVOID HAND INJURIES, PROTECTIVE GLOVES SHOULD ALWAYS BE WORN WHEN HANDLING PLATES.

PROTECTIVE SHROUDS

IT IS THE RESPONSIBILITY OF EACH PERSON OPERATING OR REPAIRING EQUIPMENT TO TAKE THE NECESSARY PRECAUTIONS TO COMPLY WITH ALL APPLICABLE SAFETY REGULATIONS.

ALFA LAVAL PROVIDES PROTECTIVE SHROUDS FOR ALL OUR PLATE HEAT EXCHANGERS. THESE SHROUDS WILL PREVENT POSSIBLE INJURIES AND/OR DAMAGE AS A RESULT OF SUDDEN LEAKAGE FROM THE PLATE PACKAGE.

List of contents

	CHAPTER
TO OUR VALUED CUSTOMER	**1**
• Alfa Laval Locations	1.1
THE NAME PLATE - AND THE IDENTIFICATION OF THE EQUIPMENT	**2**
• Code Plate & Identification Number Locations	2.1, 2.2
GENERAL	**3**
• Storage	3.1, 3.2
• Lifting	3.3
• Foundation	3.4
• Installation	3.5
• Special Loose Flange Connections	3.6
THE MAIN COMPONENTS AND THEIR FUNCTIONS FOR PARALLEL FLOW UNITS	**4A**
• List of Parallel Flow Units	4A.1
• Function	4A.2
• How It Works	4A.3
• Heat Transfer	4A.4
• Pressure Drop	4A.4
• Plates	4A.5
• Gaskets	4A.6, 4A.7, 4A.8
THE MAIN COMPONENTS AND THEIR FUNCTIONS FOR DIAGONAL FLOW UNITS	**4B**
• List of Diagonal Flow Units	4B.1
• Function	4B.2
• How It Works	4B.3
• Heat Transfer	4B.4
• Pressure Drop	4B.4
• Plates	4B.5, 4B.6
• Gaskets	4B7, 4B.8, 4B.9, 4B.10

List of contents

	CHAPTER
OPERATION	**5**
• Starting Up	5.1, 5.2
• Unit in Operation	5.3
• Shut Down	5.3
• The Risks of Not Complying With The Start-Up and Shut-Down Procedures	5.4
OPENING AND CLOSING OF THE PLATE PACKAGE	**6**
• Opening	6.1, 6.2, 6.3, 6.4, 6.5
• Removal and Insertion of plates	6.6
• Closing	6.7, 6.8, 6.9, 6.10, 6.11
MAINTENANCE	**7**
• Cleaning	7.1, 7.2, 7.3, 7.4, 7.5
• Regasketing	7.6, 7.7, 7.8, 7.9
• End Plate II Gaskets For Parallel Flow Units	7.10
• End Plate II Gaskets For Diagonal Flow Units	7.11
FAULT DETECTION	**8**
• Leakage at Connections or Plates	8.1, 8.2
• Internal Mixing of Media	8.3
• Pressure Drop Problems	8.4
• Heat Transfer Problems	8.5
SUPPLEMENTARY PARTS	**9**
• Partition Plate	9.1
• Instrument Ring	9.2

6 Opening

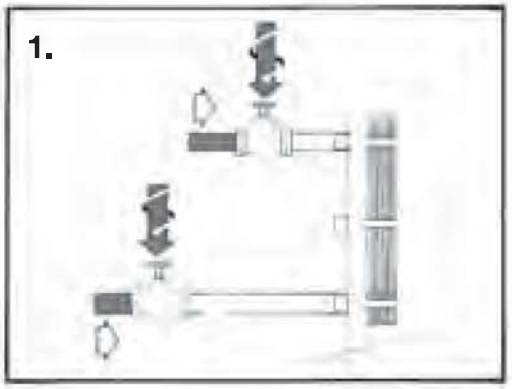

1. Slowly close the valves on the inlets. Shut off the inlet side, closing the highest pressure first.

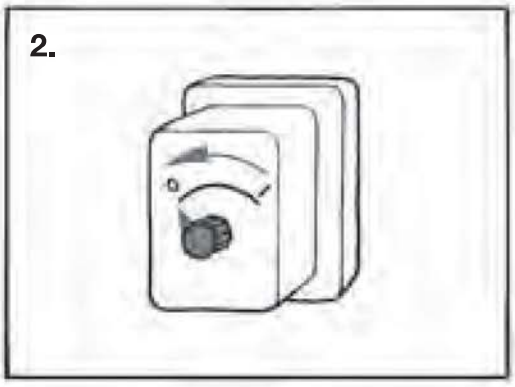

2. Switch off pumps.

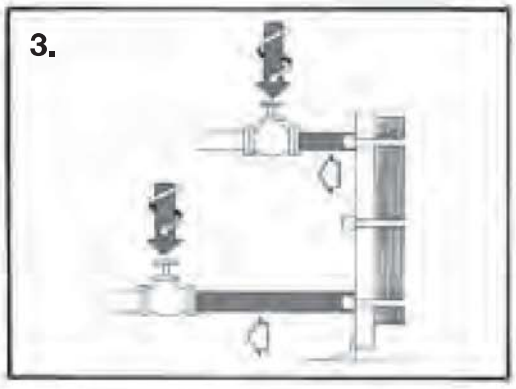

3. Close the valves on both outlets.

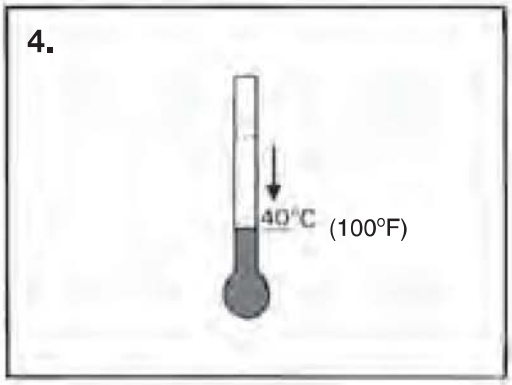

4. If the heat exchanger is hot, wait until it has cooled down to about 40°C (100°F).

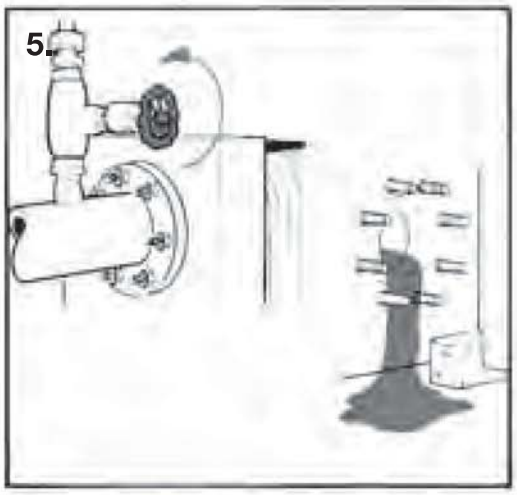

5. Drain

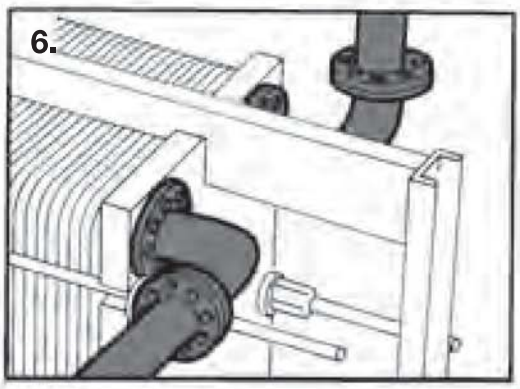

6. Dismantle any pipe bends connected to the pressure plate, so that it can be moved freely along the carrying bar.

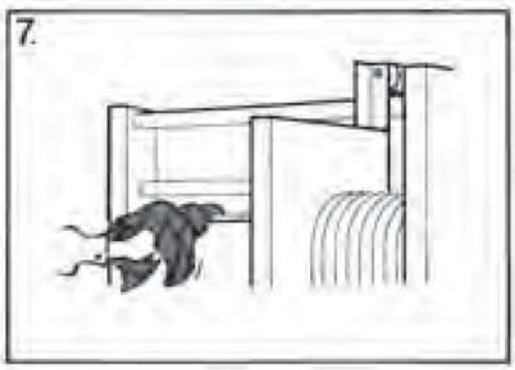

7. Inspect the sliding surfaces of the carrying bar and wipe clean

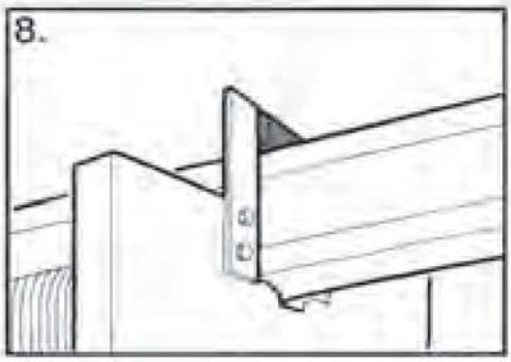

8. Inspect pressure plate roller.

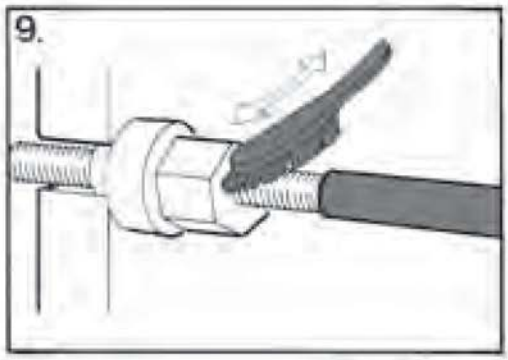

9. Pull back the plastic covers on the tightening bolts; brush the threads clean with a steel wire brush.

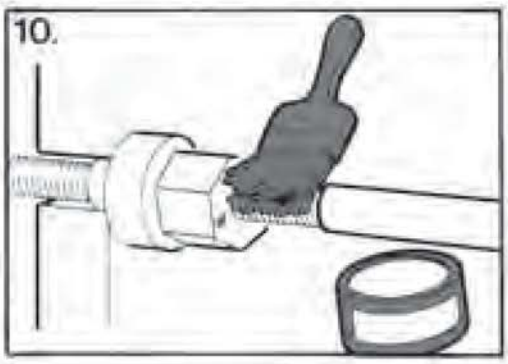

10. Lubricate the threads with a thin layer of grease, e.g LUBRIPLATE FGL-2 or equivalent.

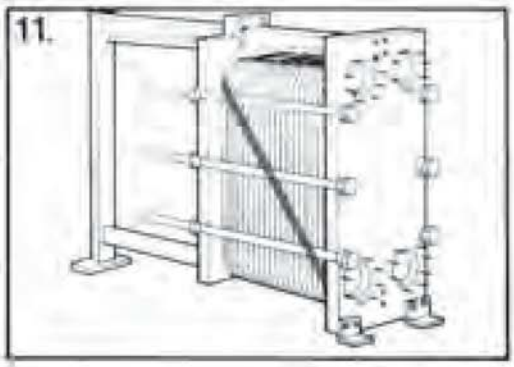

11. Mark the plate assembly on the outside by a diagonal line, or number the plates in sequence.

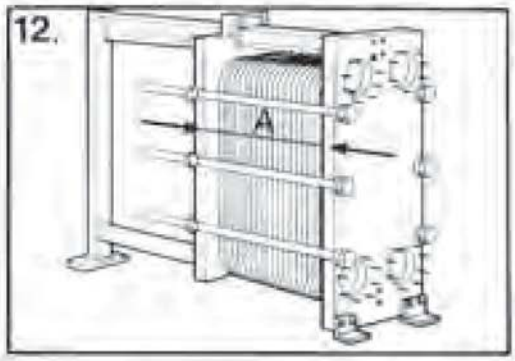

12. Measure and note the dimension A. Compare with code plate and PHE documentation for this same serial number.

	P2	A10B	TS6-M	AM10	M10B M10M
FG	X	X	X	X	
FM					X
FD			X		

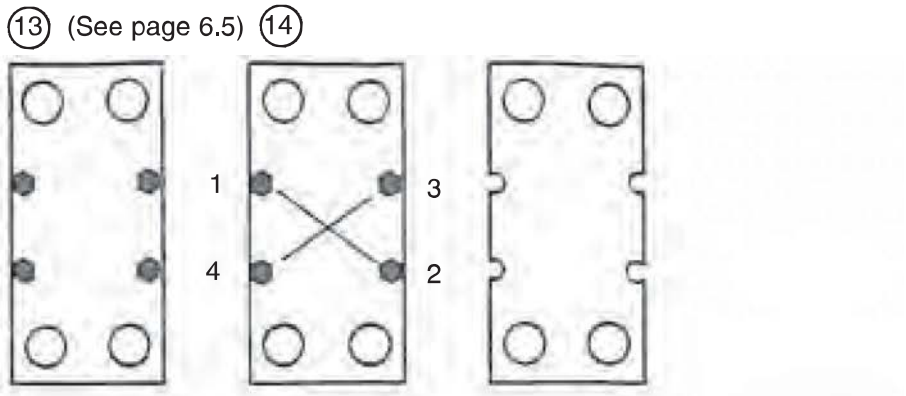

	V8	P3	V13 V20	V28	M10B M10M	M10BW M10DW	M20-M
E		X					
FD			X				
FG			X	X	X	X	
FM							X
VG	X						

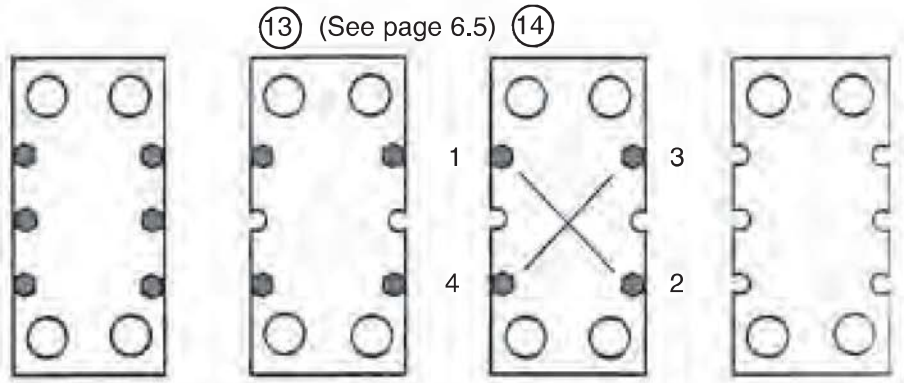

	M3	P2	P3	V28	V45
EH			X		
VG	X				
VLCH		X			
FG				X	X
FD				X	X

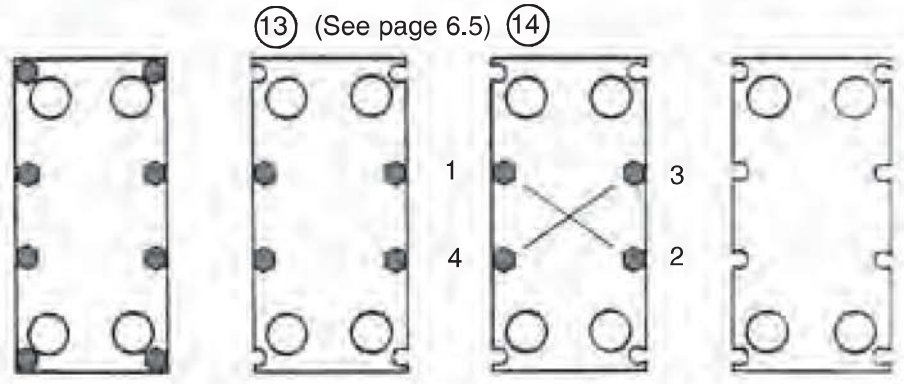

	MX25B	A15BWA	15B	TS20-M	AM20 AM20B AM20W AM20S AM20DW	M6 M6M	M15M
FG		X	X	X	X	X	X
FD		X	X				X
FL			X				
FM	X			X			X
FS				X			

M6/M6-MFG & MX25-BFM ONLY HAS ONE BOLT TOP AND BOTTOM

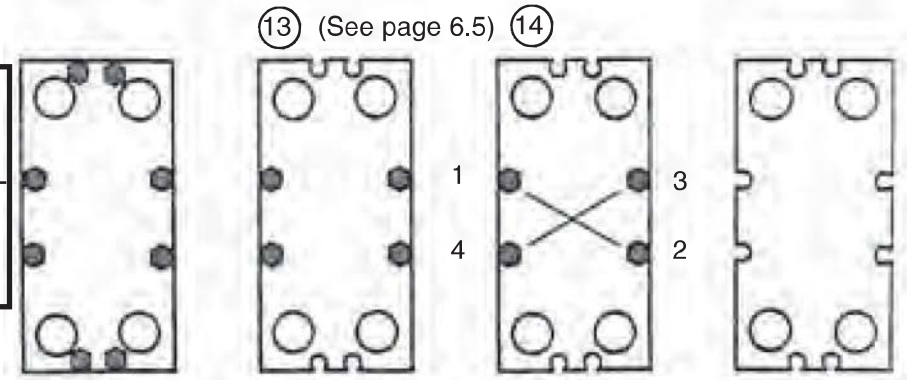

Opening

	M20-M			
FG				

M20-MFG ONLY HAS ONE BOLT TOP AND BOTTOM

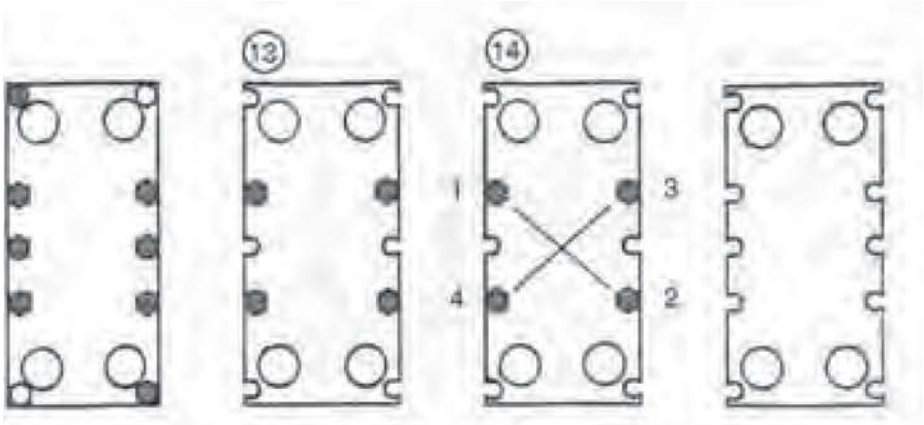

	M15B M15F	A20B	T200	M6 AK20 M6DW	M6M M30
FG		X	X		
FD				X	
FM					X
FS	X				

M6/M6-MFG ONLY HAS ONE BOLT TOP AND BOTTOM

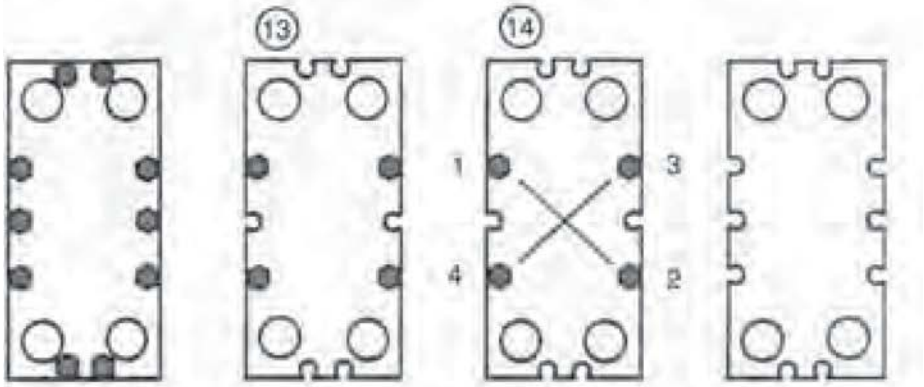

	M10B M10M	M10BW		
FD	X	X		

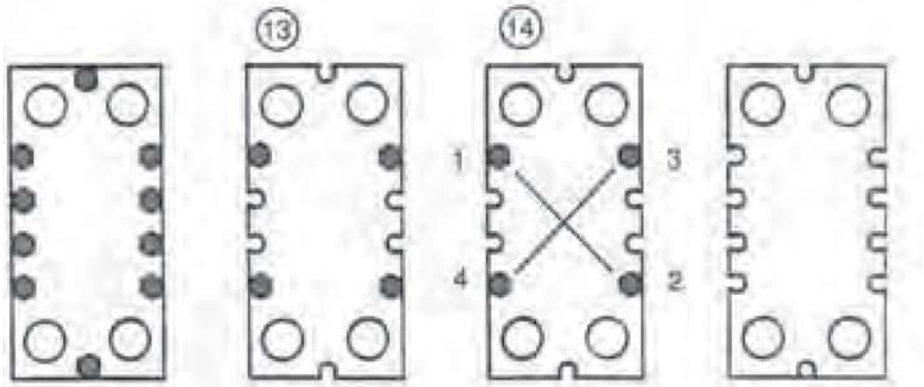

	A20B	AK20 T200	MX25B	V110
FD	X	X		
FL	X			
FG			X	X

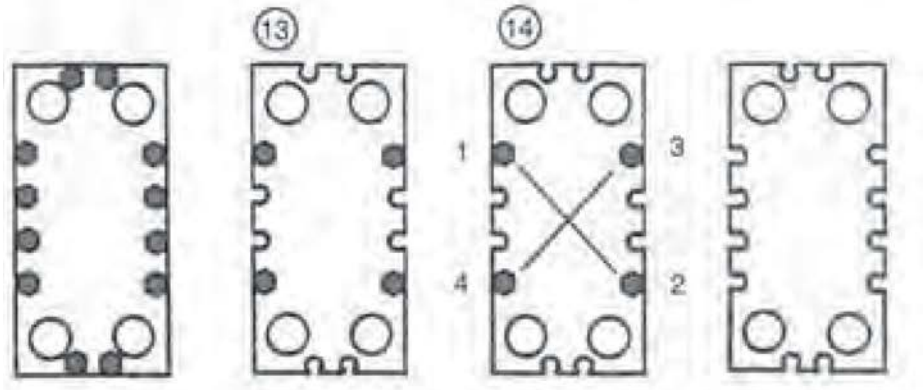

6

Opening

	AX30B AX30BW	V110		
FG FD	X	X		

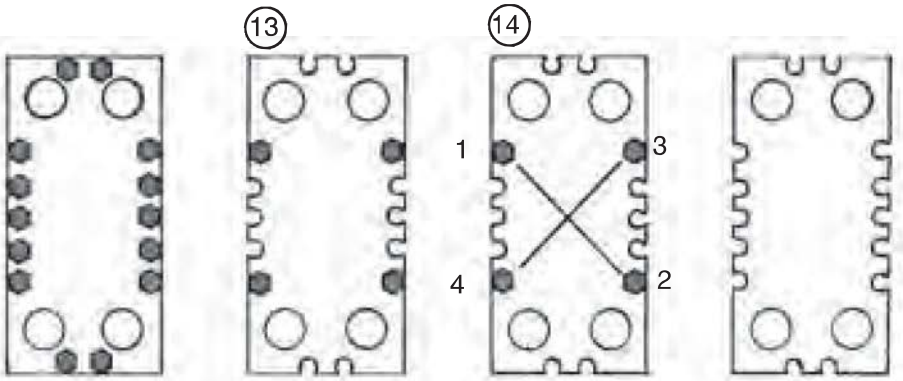

	AX30B AX30BW	A35 A45	AX35	M20M	M30	MX25B	V170 V280
FG			X		X		X
FD	X			X	X	X	X
HA		X					
FS						X	

NOTE: M30-FD, MA30-FG/FD, MX25-BFS, V280-FG/FD and V170-FD have a twenty bolt or larger pattern, use this picture only as a guide. Start sequence numbers 5 and 6 at the fourth bolt down on both sides.

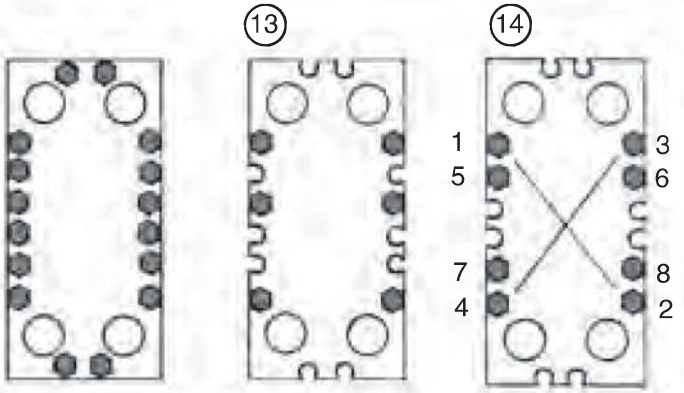

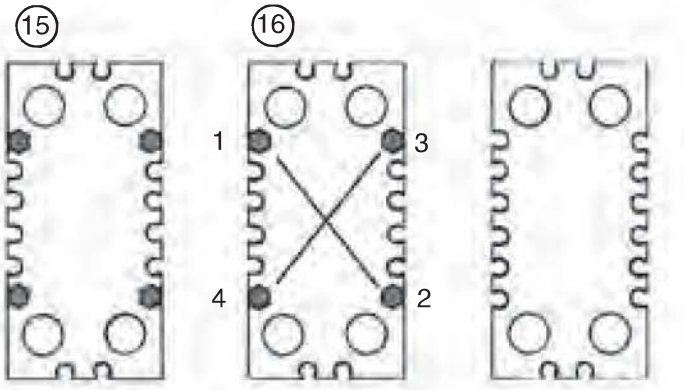

ORDER	BOLT NO.	TO DIM.
1	1-2-3-4-5-6	1.05A
2	1-2-3-4	1.10A
3	1-2 OR 3-4	OPENING

(13) If bolts are fitted with bearing boxes loosen and remove them. If not fitted with bearing boxes, then follow the pictures above.

(14) Loosen the remaining bolts, alternately and diagonally, to bring length to 1.05A.

(15) Remove bolts 5 and 6 completely.

(16) Continue opening, alternately and diagonally.

Note: Skewing of the Pressure Plate during opening must not exceed 10 mm (2 turns per bolts) across the width and 25 mm (5 turns per bolts) vertically.

Removal and insertion of plates

1.

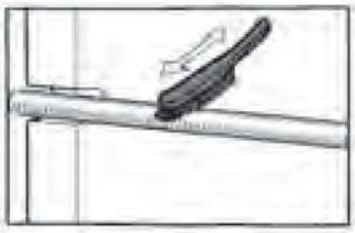

Brush the threads of the bolts clean, using a steel wire brush

Lubricate the threads with a thin layer of grease, e.g. LUBRIPLATE FGL-2 or equivalent.

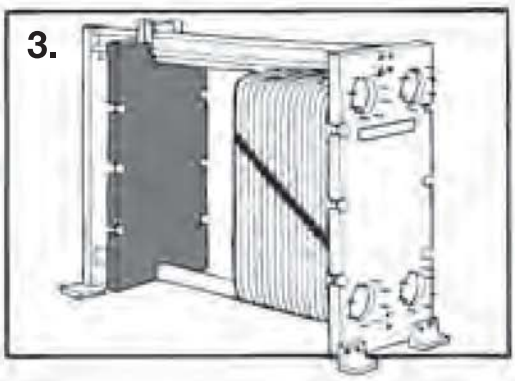

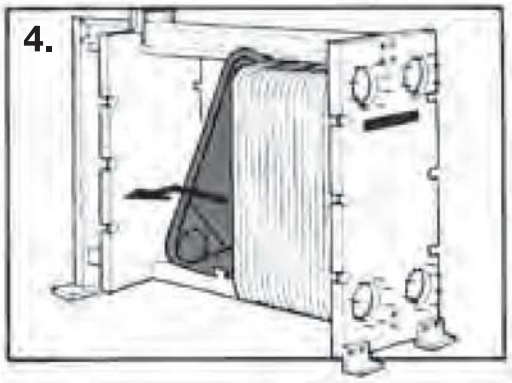

REMOVAL OF PLATES

3. Push the pressure plate against the support column.

4. Remove the plates. Stack them neatly on a skid or pallet for easy transporting.

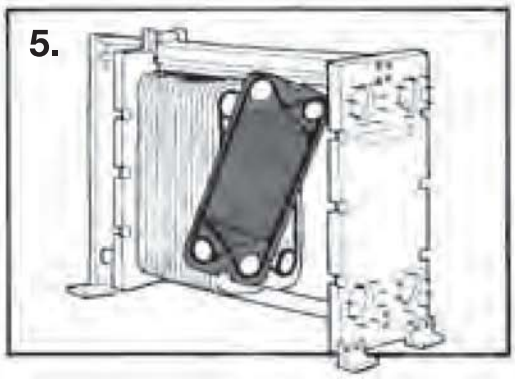

INSERTION OF PLATES

5. Hang the plates with their backs towards the pressure plate (the side without gasket).

6 Closing

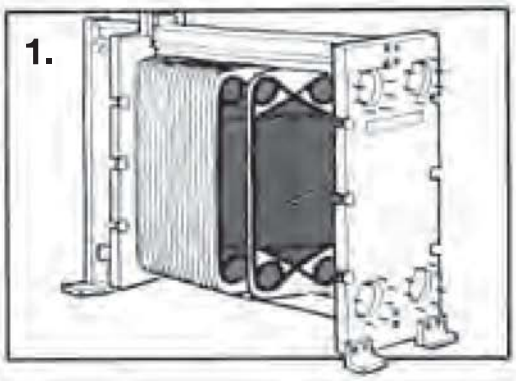

1. Check that all the sealing surfaces (i.e. surfaces in contact with the heat transfer medium) are clean.

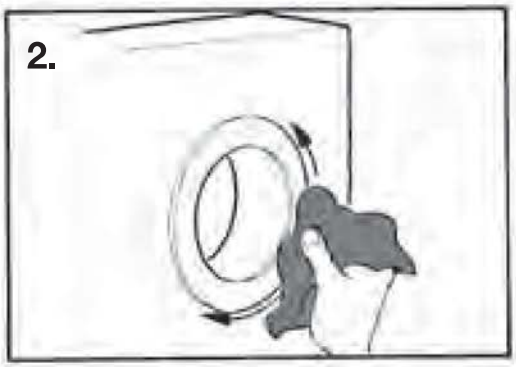

2. Check that the ring gaskets or liners, when fitted in connections, are in position and are in good condition.

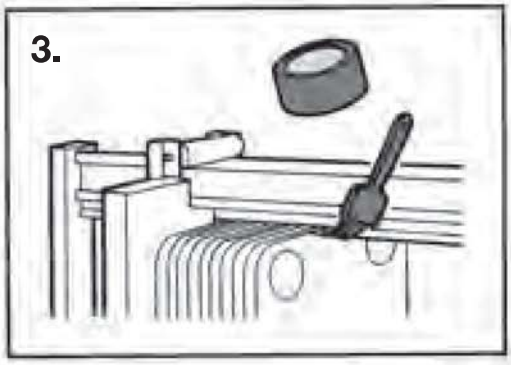

3. Clean and lubricate the sliding surfaces of the carrying bar.

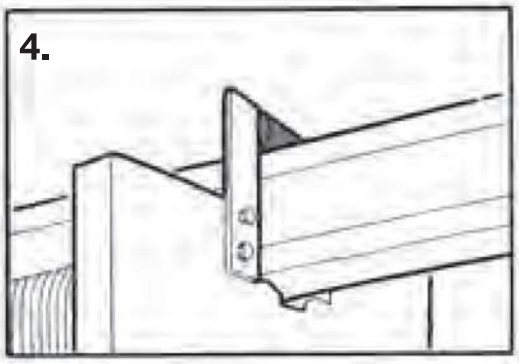

4. Inspect the pressure plate roller. Remove any debris from top surface of carrying bar.

5. Check against the drawing or flow sheet (provided with each heat exchanger) to make sure that the plates are hanging in the correct order.

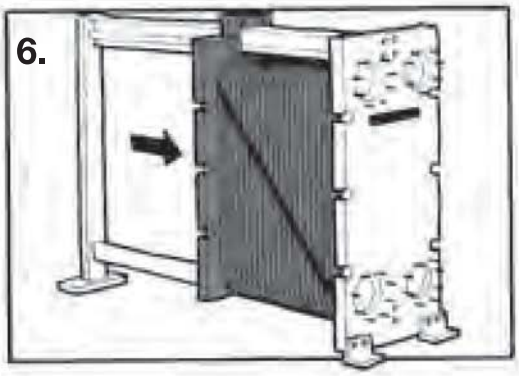

6. Press the plate assembly together.

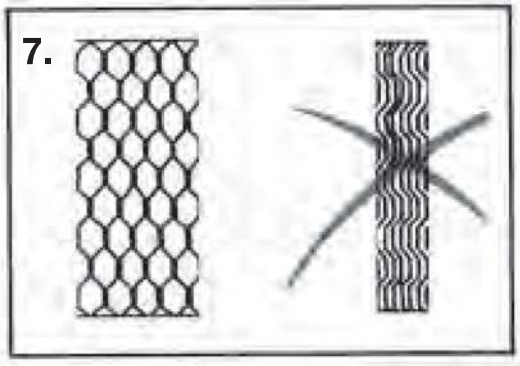

7. If the plates are correctly assembled, the edges form a “honeycomb” pattern.

If the plate pack has been marked on the outside (fig. 6) check this.

	P2	A10B	TS6-M	AM10	M10B M10M
FG	X	X	X	X	
FM					X
FD			X		

8 (See page 6.11) 11

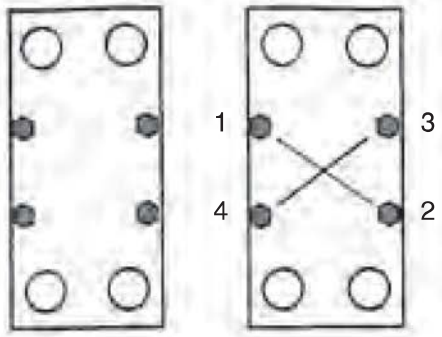

	V8	P3	V13 V20	V28	M10B M10M	M10BW M10DW	M20-M
E		X					
FD			X				
FG			X	X	X	X	
FM							X
VG	X						

8 (See page 6.11) 11

14 (See page 6.11)

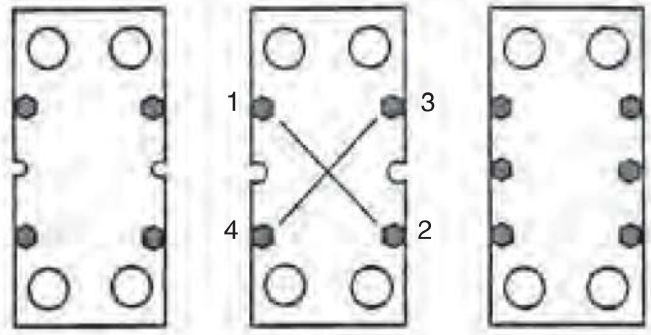

	M3	P2	P3	V28	V45
EH			X		
VG	X				
VLCH		X			
FG					X
FD				X	X

8 (See page 6.11) 11

14 (See page 6.11)

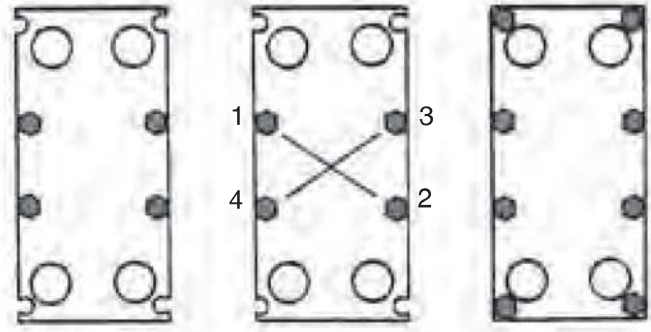

	MX25B	A15BW	A15B	TS20-M	AM20 AM20B AM20W AM20S AM20DW	M6 M6M	M15M
FG		X	X	X	X	X	X
FD		X	X				X
FL			X				
FM	X			X			X
FS				X			

M6/M6-MFG & MX25-BFM ONLY HAS ONE BOLT TOP AND BOTTOM

8 (See page 6.11) 11

14 (See page 6.11)

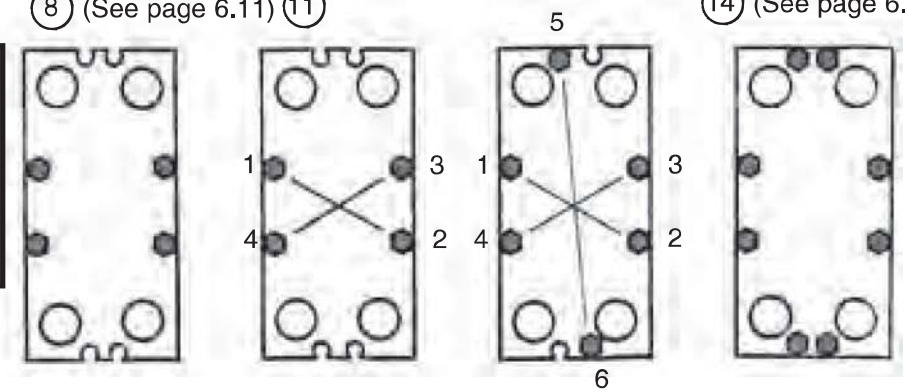

Closing

	M20-M			
FG				

M20-MFG ONLY HAS ONE BOLT TOP AND BOTTOM

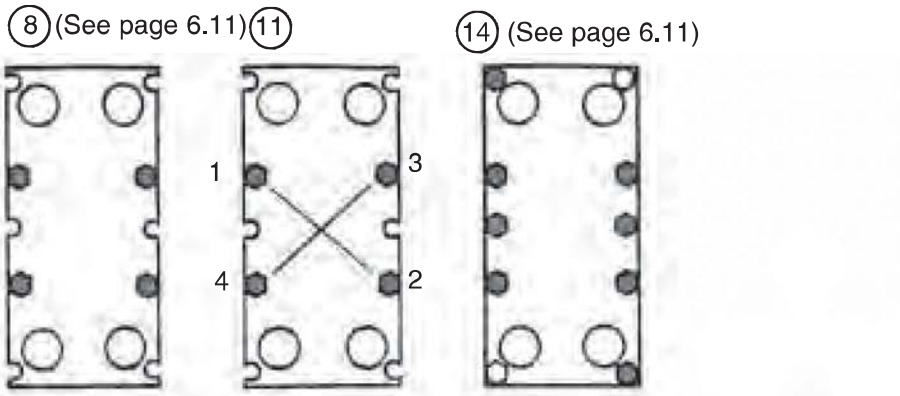

	M15B M15F	A20B	T200	M6 AK20 M6DW	M6M M30
FG		X	X		
FD				X	
FM					X
FS	X				

M6/M6-MFG ONLY HAS ONE BOLT TOP AND BOTTOM

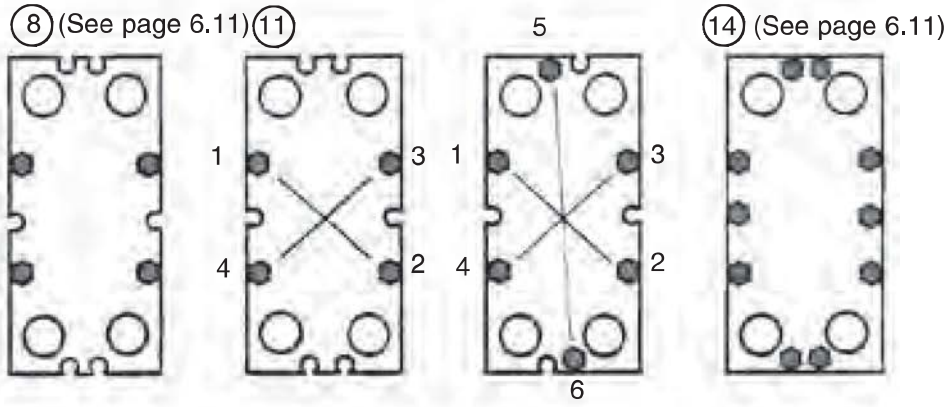

	M10B M10M	M10BW		
FD	X	X		

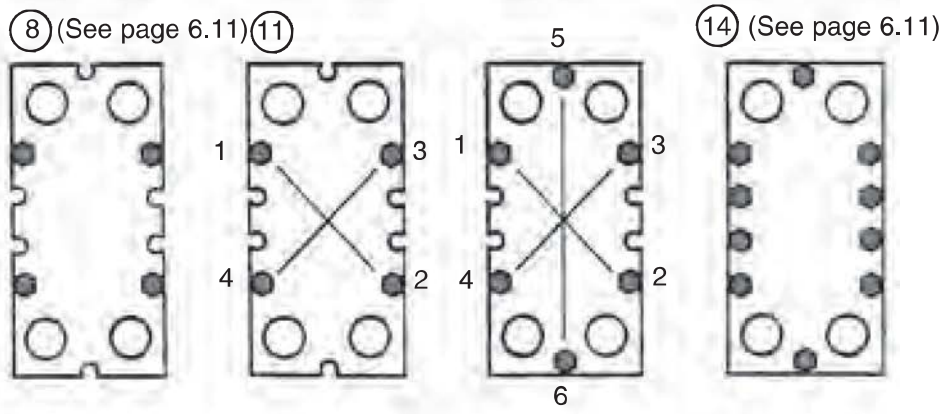

	A20B	AK20 T200	MX25B	V110
FD	X	X		
FL	X			
FG			X	X

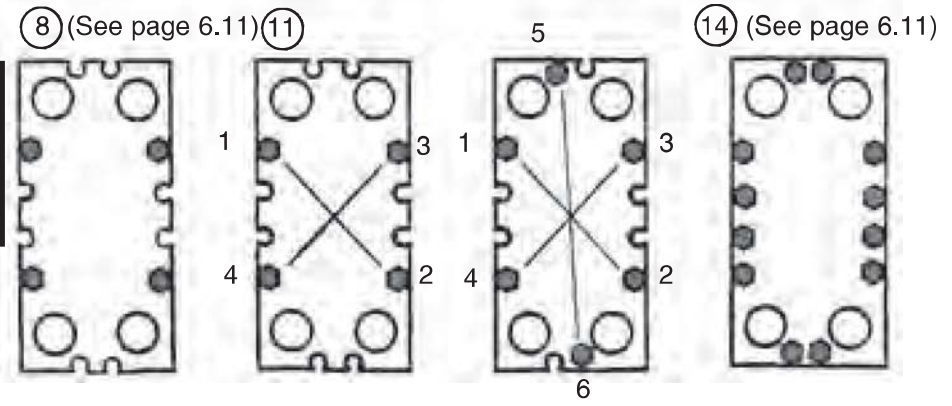

Closing

	AX30B AX30BW	V110		
FG FD	X	X		

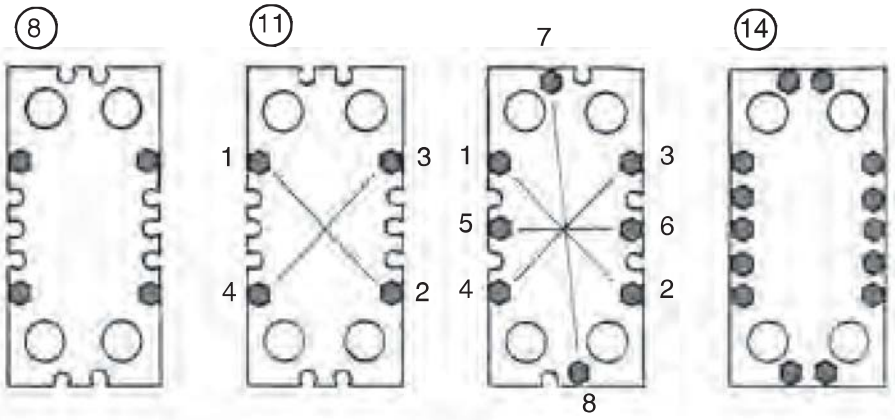

	AX30B AX30BW	A35 A45	AX35	M20M	M30	MX25B	V170 V280
FG			X		X		X
FD	X			X	X	X	X
HA		X					
FS						X	

NOTE: M30-FD, MA30-FG/FD, MX25-BFS, V280-FG/FD and V170-FD have a twenty bolt or larger pattern, use this picture only as a guide. Start sequence numbers 5 and 6 at the fourth bolt down on both sides.

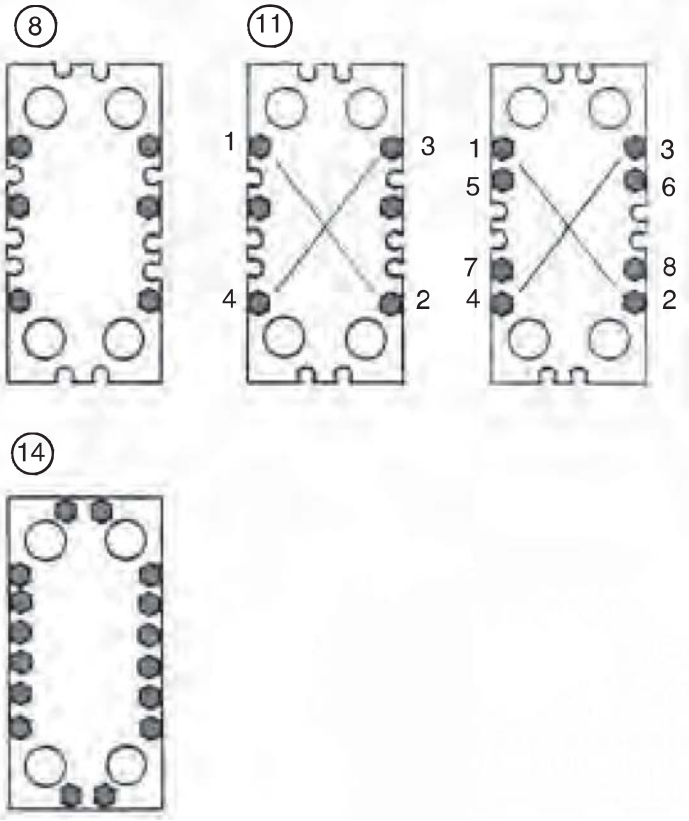

ORDER	BOLT NO.	TO DIM.
1	1-2-3-4-5-6	1.05A
2	1-2-3-4	1.10A
3	1-2 OR 3-4	OPENING

Note: See next page for closing instructions for all the models

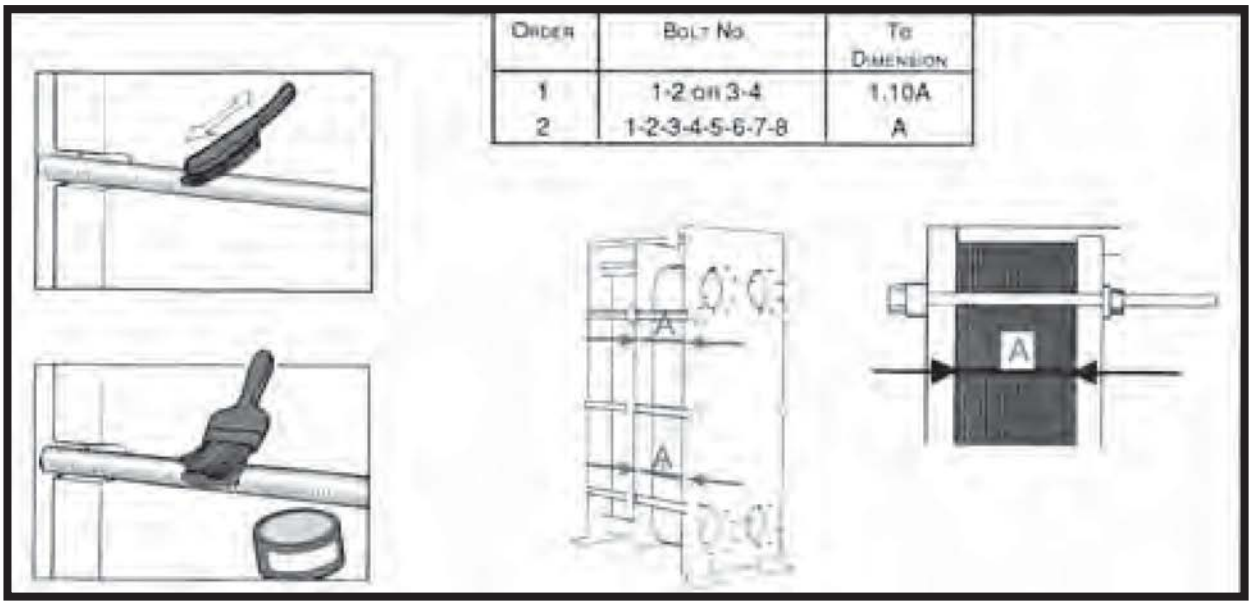

8. Place all the bolts that are fitted with bearing boxes in position. If not fitted with bearing boxes then follow the pictures for your specific model.

9. Brush the threads of the bolts clean, using a steel wire brush.

10. Lubricate the threads with a thin layer of grease, e.g. LUBRIPLATE FGL-2 or equivalent.

11. Tightening is carried out alternately and diagonally, as shown on the figure above.

12. Check the dimension A during tightening at the positions of the bolts that are being used. Skewing of the pressure plate during tightening must not exceed 10mm (2 turns per bolt) across the width and 25 mm (5 turns per bolt) vertically.

13. Nominal plate pack length A can be exceeded in exceptional cases, the tightening can be stopped at the following dimensions

Plate pack length/plat	Plate pack length
> 4 mm	A + 1%
> 3mm, < 4mm	A + 1.5%

14. Place the other bolts in position.
- Inspect the washers.
- When fully tightened, the bolts should all be equally tensioned.
- The difference between the plate pack lengths measured at adjacent bolts should not exceed:

  2mm when dimension A is < 1000mm

  4mm when dimension A is > 1000mm
- The plate pack length at all bolts must not differ by more than 1%
- If the unit does not seal fully, it can be tightened to the dimension A-1%.

IF DIMENSION A IS NOT REACHED WITH APPLICATION OF THE ABOVE STEPS:

- Check the number of plates and dimension A.
- Check that all the nuts and bearing boxes are running freely. If not, clean and lubricate or replace.
- Fit all the bolts, and tighten alternately.

7 Cleaning

INCRUSTATION - SCALING

- Calcium carbonate
- Calcium sulphate
- Silicates

CLEANING

Mechanical cleaning after opening.

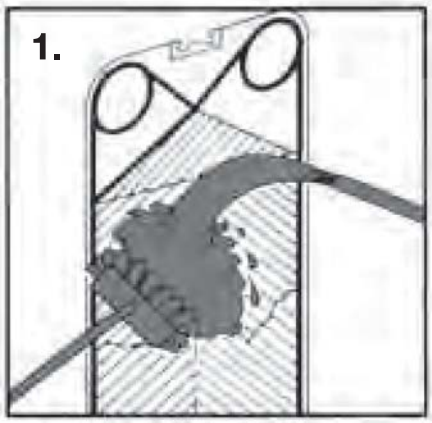

1. Soft brush and running water.
   NOTE! Avoid gasket damage.

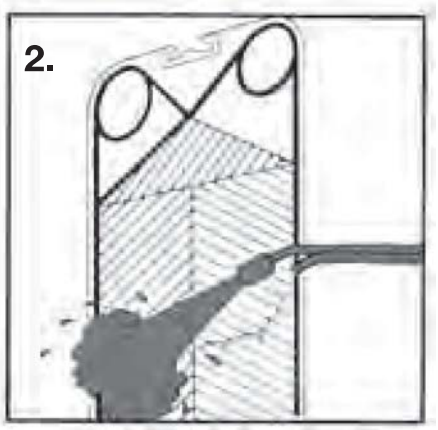

2. High pressure hose.

3. Chemical cleaning of opened unit by using:
   - Nitric acid
   - Sulfamic acid
   - Citric Acid
   - Phosphoric acid
   - Complexing agents (EDTA, NTA)
   - Sodium polyphosphates

Concentration max 4% by wt%
Temperature max 140° F

NOTE!
Under no circumstances should HYDROCHLORIC ACID be used with STAINLESS STEEL PLATES and under no circumstances should HYDROFLUORIC ACID be used with TITANIUM PLATES. Water of more than 300 ppm Chlorine may not be used for the preparation of cleaning solutions.

It is very important that carrying bars and support columns made of aluminum are protected against chemicals.

Cleaning

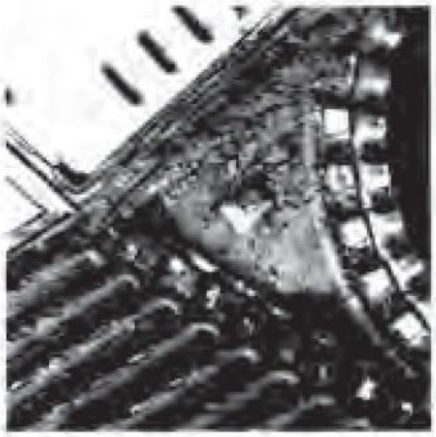

SEDIMENT

- Corrosion products
- Metal Oxides
- Silt
- Alumina
- Diatomic organisms and their excrement of various colors.

CLEANING

Mechanical cleaning after opening.

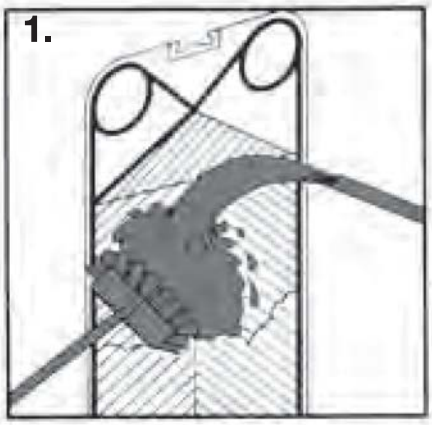

1. Soft brush and running water. NOTE! Avoid gasket damage.

3. Chemical cleaning of opened unit by using:

   - Nitric acid
   - Sulfamic acid
   - Citric Acid
   - Phosphoric acid
   - Complexing agents (EDTA, NTA)
   - Sodium polyphosphates

Concentration max 4% by wt%
Temperature max 140° F

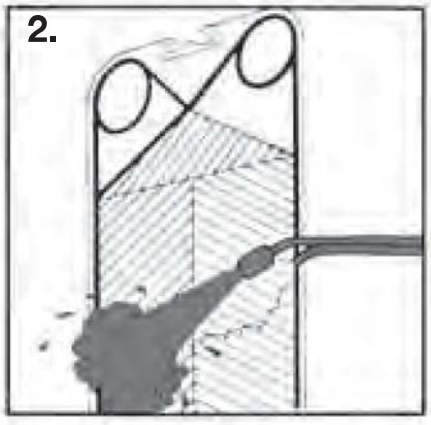

2. High pressure hose.

4. The addition of surfactants can improve cleaning effect.

NOTE!
Under no circumstances should HYDROCHLORIC ACID be used with STAINLESS STEEL PLATES and under no circumstances should HYDROFLUORIC ACID be used with TITANIUM PLATES. Water of more than 300 ppm Chlorine may not be used for the preparation of cleaning solutions.

It is very important that carrying bars and support columns made of aluminum are protected against chemicals.

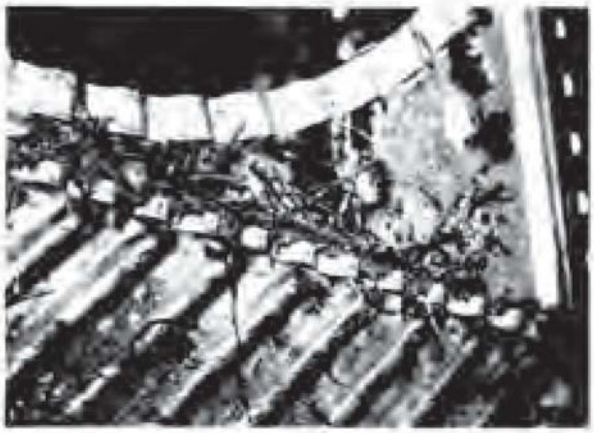

GROSS FOULING

- Seaweeds
- Wood chips/fibers
- Mussels
- Barnacles

CLEANING: NOTE: BACKFLUSHING OF THE UNOPENED HEAT EXCHANGER CAN SOMETIMES BE SUFFICIENTLY EFFECTIVE.

Mechanical cleaning after opening.

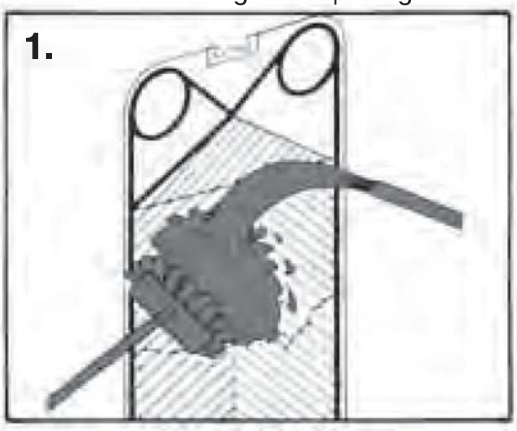

1. Soft brush and running water.
   NOTE! Avoid gasket damage.

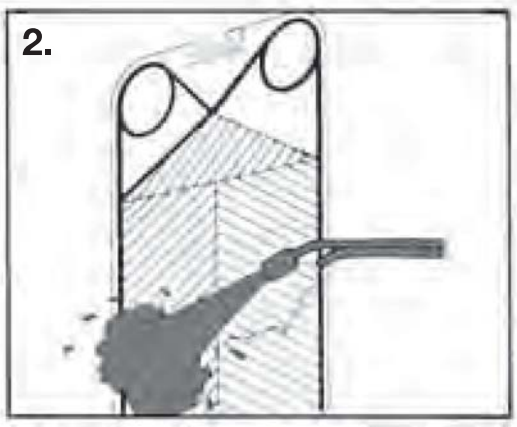

2. High pressure hose.

NOTE!
Under no circumstances should HYDROCHLORIC ACID be used with STAINLESS STEEL PLATES and under no circumstances should HYDROFLUORIC ACID be used with TITANIUM PLATES. Water of more than 300 ppm Chlorine may not be used for the preparation of cleaning solutions.

It is very important that carrying bars and support columns made of aluminum are protected against chemicals.

BIOLOGICAL GROWTH - SLIME

- Bacteria
- Nematodes
- Protozoa

CLEANING

Mechanical cleaning after opening.

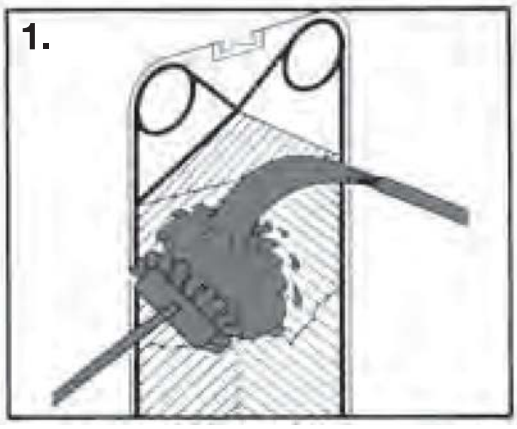

1. Soft brush and running water.
   NOTE! Avoid gasket damage.

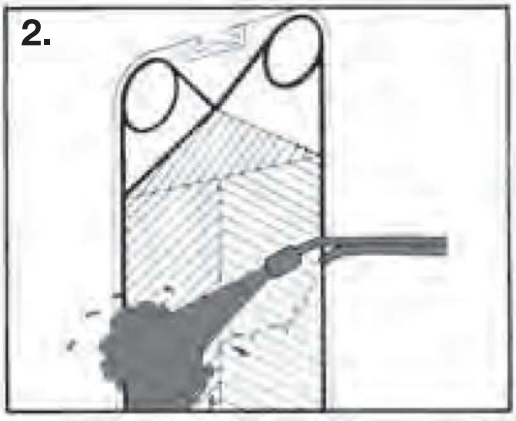

2. High pressure hose.

3. Chemical cleaning of opened unit by using:

   - Nitric acid
   - Sulfamic acid
   - Citric Acid
   - Phosphoric acid
   - Complexing agents (EDTA, NTA)
   - Sodium polyphosphates

Concentration max 4% by wt%
Temperature max 140° F

NOTE!
Under no circumstances should HYDROCHLORIC ACID be used with STAINLESS STEEL PLATES and under no circumstances should HYDROFLUORIC ACID be used with TITANIUM PLATES. Water of more than 300 ppm Chlorine may not be used for the preparation of cleaning solutions.

It is very important that carrying bars and support columns made of aluminum are protected against chemicals.

- Oil residues
- Asphalt
- Fats

CLEANING

Mechanical cleaning after opening.

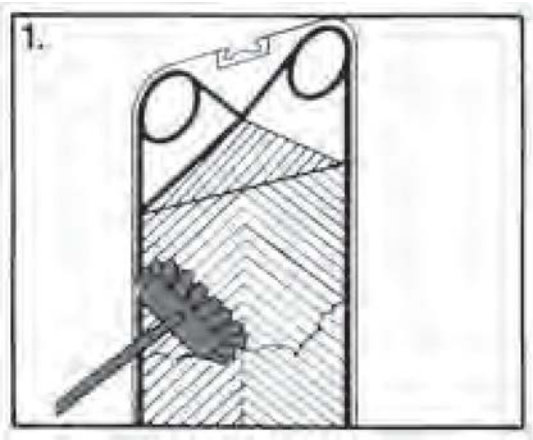

1. Hydrocarbon-based deposits may be removed by using a soft brush and a PARAFFINIC or NAPHTHA-BASED solvent (e.g. KEROSENE).

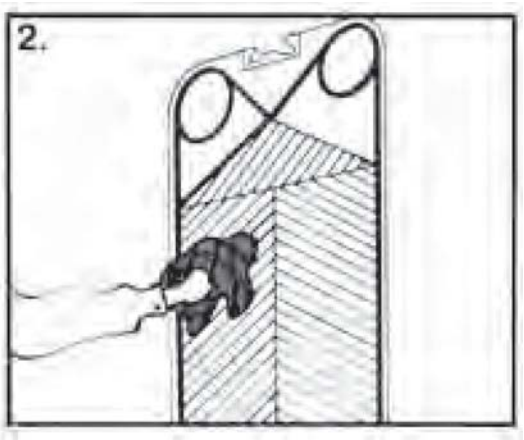

2. Dry with a cloth or rinse with water.

NOTE!
Gaskets in natural, butyl and EPDM rubber swell in these media.

Contact time should be limited to 0.5 hour.

THE FOLLOWING SOLVENTS SHOULD NOT BE USED

- Ketones (e.g. Acetone, Methyletylketone, Methylisobutylketone)
- Esters (e.g. Ethylacetate, Butylacetate)
- Halogenated hydrocarbons (e.g. Chlorothene, Carbon tetrachloride, Freons)
- Aromatics (e.g. Benzene, Toluene)

User's Manual

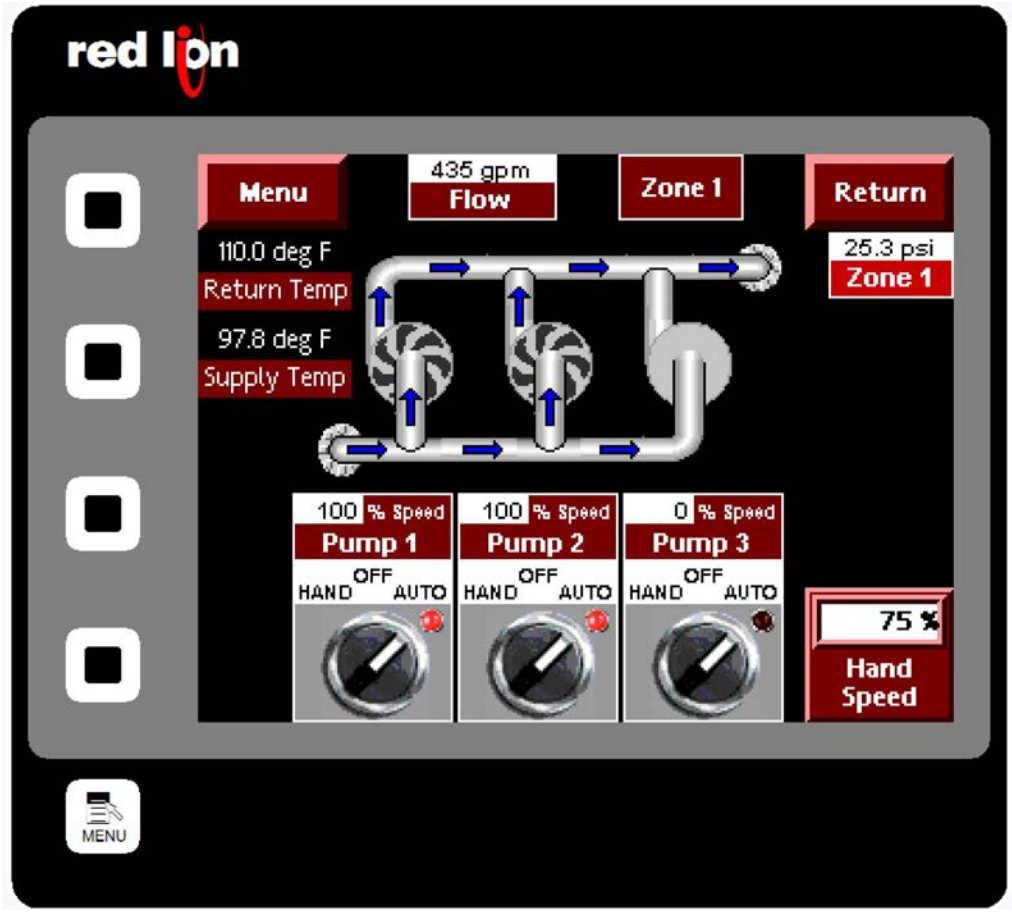

TIGER'S EYE

E-Series – Mark VI

TIGERFLOW Systems, Inc.
4034 Mint Way
Dallas, Texas 75237
214-337-8780
www.tigerflow.com

Introduction

The E-Series - Mark VI is a variable speed pump controller, intended for closed-loop HVAC applications. The controller employs a user-friendly color touchscreen HMI (Human Machine Interface) to monitor conditions, and adjust the system settings.

The controller offers multiple zone differential pressure (DP) control, where the pumps will run at the speed required to satisfy the differential pressure of the zone farthest from set point.

In the following text, all the capabilities and options of this system will be discussed.

Pumps are staged ON and OFF based on the minimum number of pumps specified to run, zone DP and flow. The required minimum number of pumps will run constantly. If flow exceeds the capacity of the running pumps or if zone DP pressure is below pump start pressure, additional pumps are staged ON. Pump stages OFF as flow decreases and the zone DP is satisfied. However, the number of pumps running is never less than the minimum number of pumps required.

TIGERFLOW Systems, Inc., Copyright 2007, Version 1.0

Introduction 2
MANUAL OPERATION: 4
AUTOMATIC OPERATION: 4
PUMP START: 4
PUMP SPEED CONTROL: 5
DEFAULT PUMP SPEED: 5
PUMP STOP: 5
ALTERNATION: 5
ALARMS: 6
POWER UP DELAY: 6
System Setup 7
CONTROL SETUP: 7
SETTING PUMP START / STOP DIFFERENTIAL PRESSURES: 7
FLOW METER SETUP: 7
SETTING UP ALARMS: 7
PUMP ALTERNATION: 7
FACTORY DEFAULT SETTINGS: 8
System Startup 9
PUMP SPEED CONTROL: 9
HMI Operating Screens: 10
FLOW SEQUENCING SCREEN: 11
FLOW METER SETUP SCREEN: 11
FLOW SCALING SCREEN: 11
ALARM SETTINGS SCREEN: **12**
PUMP ALTERNATION SCREEN: **12**
TIMED ALTERNATION SET UP SCREEN: 12
SYSTEM SETTINGS SCREEN: 13
PUMP SETTINGS SCREEN: 13
SPEED CONTROL SCREEN: 13
ALARM / SYSTEM STATUS SCREEN: 14
EVENT HISTORY SCREEN: 14
Troubleshooting: 15

TIGERFLOW Systems, Inc., Copyright 2007, Version 1.0

System Operation

MANUAL OPERATION:

In the **Main Screen** touch the pump HOA switch until it rotates to the HAND Position. The pump will start after a 2 second delay. Pump will run at the percent manual speed setting in the lower right corner of the main operating screen. To change this speed touch the hand speed % setting, enter the desired speed and touch the enter button. All Pumps running in Hand will immediately accelerate or decelerate to the selected speed.

CAUTION: Running pumps in hand position overrides all system safeties and alarm shutdown features.

NOTE: % speed is a percentage of 60 Hz. A pump running at 30 Hz is running at 50% speed. This percentage also relates the 0-10 V DC speed signal being transmitted to a drive. 75% speed equates to a 7.5 V DC speed reference signal to the drive. 100% speed equates to a 10.0 V DC speed reference signal to the drive.

Touch the OFF button above pump HOA or touch HOA switch to rotate it to OFF position and stop pump from touch screen interface. The pump may also be stopped through the VFD's keypad or disconnect.

All VFDs are provided with a means of manual operation from the drive. To operate the drive in manual mode, please consult the drive's operation manual and/or consult with your TIGERFLOW representative.

AUTOMATIC OPERATION:

WARNING: Do not run pumps in automatic prior to proper system setup. Failure to do so could damage drives, pumps / seals or over pressurize piping.

In order to set the pump(s) in AUTO operation, touch the HOA switch until the auto option is selected.

PUMP START:

The Mark VI sequences pumps (when pump HOA switches are in AUTO position) ON and OFF based on the number of pumps specified to run, active zone DP and flow. The VFD(s) must be in AUTO mode. The Lead pump starts when a pump is put in Auto and the on-time delay has expired. Additional pumps are brought online until the number of pumps running in auto equals the number of pumps specified to run.

If the differential pressure in the controlled zone falls below the start setpoint for the next available pump, it will start running and match the lead pump speed. Likewise, when the flow exceeds the flow capacity of the pumps running, an additional pump is added (if available).

Two means of pump run verification are provided; pump differential pressure (DP) and VFD run verification. For systems equipped with DP switches, the pump must produce 10 psi of boost before the pump fail time expires or the pump is considered failed and will be disabled until the fault gets reset. The pump failure energizes an alarm and attempts to start the next Auto available pump. A typical pump fail time setting is 30 seconds.

TIGERFLOW Systems, Inc., Copyright 2007, Version 1.0

VFD run verification provides a much quicker means of detecting drive related pump failure. This feature is provided by monitoring the VFD running contact (N.O.). If a pump is commanded to run and the VFD running contact is does not close, the VFD is considered failed, an alarm is energized and the next pump available pump in auto mode will start. VFD run verification will detect numerous drive related problems including:

1. Drive in hand / manual mode.
2. Drive alarm condition.
3. Power disconnected from drive.

Pump and / or VFD failure detection is only active for pumps running in Auto mode. Touching the Alarm Reset button on the Mark VI touch screen resets all pump and VFD failure alarms.

PUMP SPEED CONTROL:

When starting automatically, the lead pump will ramp immediately to the minimum auto speed setting. Speed will automatically increase and decrease as necessary to satisfy the active zone differential pressure setpoint. However, pump speed will NEVER run at a lower speed than the minimum speed setting. All pumps running in auto run at the same speed.

The controller is capable of controlling multiple zones. Each zone has an independent differential pressure set point. The active zone is the zone differential pressure the PLC uses to control pump speed. This zone can be selected either manually or automatically. When the active zone is manually selected, the zone has exclusive control of pump speed. Automatic zone selection checks all zones for deviation from the respective setpoint every 30 seconds. The zone with the greatest deviation below setpoint becomes the active zone.

DEFAULT PUMP SPEED:

A default speed setting is provided in the even all zone DP transmitters fail. Zone DP is measured via a 2-10 V DC signal. This analog signal is monitored for out of range values. If the signal is less than 2 V DC or greater than 10 V DC a DP zone failure alarm is generated and all pumps will continue to run at the default speed setting.

PUMP STOP:

Pumps stop based on flow, system disable, alarm condition or pump alternation.

When the number of pumps running exceeds the minimum number of pumps specified to run, all extra pumps will stop when the flow rate is lower than the flow start setting and the DP pressure is greater or equal than the stop pressure setting for the off-time delay.

The system disable feature stops all pumps with a single customer furnished normally open contact. When contact closes all pumps shut down and the system is disabled until the contact opens.

ALTERNATION:

The lead pump may be alternated either manually or scheduled (daily, weekly or monthly). Manual alternation can be generated through a button on the HMI. The scheduled alternation occurs at a specific time and date. Daily alternation occurs at a user specified time every day. Weekly alternation occurs at a user specified day and time weekly. Monthly alternation occurs in the first week of a month, on the day and time specified by the user.

ALARMS:

Standard alarms include: pump failure, VFD failure, and Zone DP transmitter failure. Each alarm condition has a menu adjustable time delays.

POWER UP DELAY:

System has a user definable startup delay. When control power is lost, pumps will not start until delay time has elapsed after power is restored. Feature allows user to stage on equipment after a power outage.

System Setup

CONTROL SETUP:

IMPORTANT: Before powering up control panel verify incoming power meets system design requirements. These requirements can be found inside the control panel door in the lower left corner. Starting system with other than the design power could result in damage to controls and motors. This damage VOIDS the TIGERFLOW warranty.

Once proper power feed has been verified, turn ON control power and drive disconnects. After the HMI has powered up, the screen will show pumps and associated HOA switches.

SETTING PUMP START / STOP DIFFERENTIAL PRESSURES:

Set the pump's staging setpoints by touching the Pump Start/Stop button, located on the Menu screen. A password keypad appears. Screen now displays a table showing pump start/stop differential pressures and ON/OFF delay settings for lead and lag pumps. When the active zone differential pressure is equal to or less than a pump start differential pressure for the ON-delay time period then the pump starts. Likewise, when the differential pressure is greater or equal than pump stop differential pressure for the OFF-delay time and the number of pumps running is greater than the minimum required pumps then the pump stops.

If the system is equipped with a flow meter, the pumps will also stage on and off based on the current flow, the flow meter settings and the staging setpoints can be adjusted in the Flow Sequence screen, located in the Config System menu, to access this parameters log in with the user password.

After all pump start/stop settings have been made, touch Menu button to return to the menu screen.

FLOW METER SETUP:

Two types of flow meters can be used with the standard E-Series controller. Data Industrial 200 Series insertion flow meter with Model 310 pulse to analog signal converter is supported for most pipe sizes. Also, supported is any flow meter providing a 4-20 mA or 2-10 V DC signal factory calibrated for a specific maximum flow in a specific pipe size (i.e. Magmeters, Onicon insertion flow meters).

SETTING UP ALARMS:

Set alarm pressures by touching Alarm Settings button on the Menu screen. In this screen you can set the on-delay times for the VFD and pump failure.

A. Pump Failure Alarm is generated when a pump fails to produce 10 psi of boost for the pump failure ON-delay time period. Typical ON-delay time period is 30 seconds.
B. VFD Failure Alarm is generated when the drive running contact does not close within the ON-delay time period. Typical ON-delay time is 2 seconds.

If temperature sensors are used in this system, high temperature alarms can be set in this screen as well.

PUMP ALTERNATION:

Three types of pump alternation options are available:

A. Automatic
B. Manual
C. Timed

Automatic alternation alternates the lead pump after all pumps shutdown. If alternation is desired and all pumps never shutdown, do not use this options.

Manual alternation alternates the lead pump when an operator touches the manual alternation button. This option should also be selected if alternation is not desired.

Timed alternation alternates the lead pump at a specified time interval at a specific time of day. Options include daily, weekly and monthly alternation. Daily alternation occurs each day at the specified time (24 hour clock). Weekly alternation occurs on the day of the week (1=Monday, 2=Tuesday … 7=Sunday) and time (24 hour clock) specified. Monthly alternation occurs during the first week of the month at the time and day specified.

To setup pump alternation touch MENU button on main screen. Touch Config System button then touch the Pump Alternation button and select desire alternation mode. If Mthly/Wkly/Daily is selected, touch Setup button to set alternation day and time.

FACTORY DEFAULT SETTINGS:

To restore the controller to factory settings, access the Speed Control screen from the Config System menu, then touch the Speed Control 2 button. Set the second ΔP from setpoint to 0 and restart the PLC.

To restart the PLC, simply switch the Run/Stop switch located in the PLC, from run, to stop, and then back to run, or simply cycle power on the controller.

TIGERFLOW Systems, Inc., Copyright 2007, Version 1.0

System Startup

Once the system pressure and alarm settings have been entered, the system is now ready for operation. Verify all drives are in Auto mode. Touch each pump HOA button until it rotates to the A or Auto position.

PUMP SPEED CONTROL:

Two user adjustable speed control parameters are provided to tune system response to the building demands. Settings are found from the main screen by touching MENU, CONFIG SYSTEM and SPEED CONTROL.

Minimum Auto Speed: The purpose of this setting to prevent pumps from running at non-productive speeds (no flow). It provides quicker flow responses, reduces pump cycling, it helps prevent motor/pump overheating and when set properly shuts down pumps during no flow conditions.

Set the minimum auto speed at the speed required to provide the desired boost at maximum suction conditions. Setting must be determined under low / no flow conditions.

CAUTION: Pump speed will NEVER be lower than the minimum auto speed setting. This setting is intended to be the speed required to produce the desired boost under no-flow conditions. Failure to take into account the maximum suction pressure conditions while making this setting will result in high pressure alarms.

System Response Time: This setting defines how often the controller makes speed adjustments. Increasing this setting makes system respond slower to pressure fluctuations. Decreasing the system response time makes it respond quicker.

TIGERFLOW Systems, Inc., Copyright 2007, Version 1.0

HMI Operating Screens:

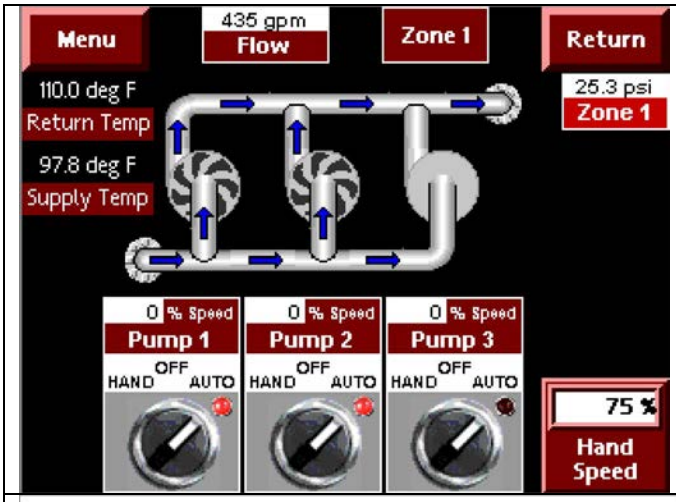

MAIN SCREEN:
Main operating screen shows differential pressure (DP) of Zone being controlled, flow, and pump run status. Pump status includes pump operating mode (hand, off, auto), ON / OFF.

If temperature sensors are used, the screen displays the current values.

% SPD = Current speed signal to drives
Manual speed = % speed of pump in hand mode

Touch MENU to access menu screen

MENU SCREEN:
Menu screen provides direct access to all system settings and operational information. Touching a button will cause the screen to go to a sub-screen for the option selected.

Log on to the system to access settings that are password protected

Touch Main Screen to return to the Main operating screen.

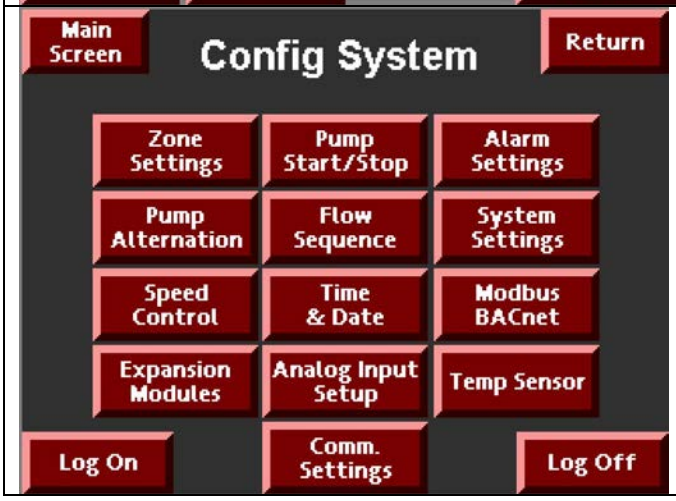

CONFIG SYSTEM SCREEN:
Screen is designed to provide quick access to all system settings during initial startup. Access requires at least a level 4 password and should only be accessed by the facility manager or authorized TIGERFLOW representative.

Settings exclusive to this screen include number of pumps, alternation, sensor ranges, and passwords.

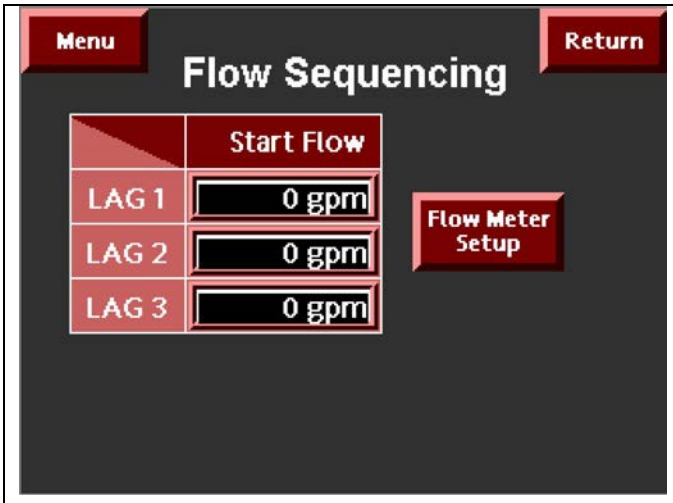

FLOW SEQUENCING SCREEN:
Systems equipped with flow meters can stage lag pumps based on flow as well as pressure. Using this feature allows the system to maintain system pressure with less fluctuation in system pressure. Pumps stage ON when flow is > Lag start OR if system pressure is < Lag start pressure. Pumps stage OFF when flow is < start flow AND system pressure is > stop pressure.

Setup Recommendations:
Lag1 start pressure should be set at lead pump design flow plus 1 gpm. Set Lag 2 start flow at Lead flow + Lag 1 flow + 1 gpm. Set Lag 3 start flow at Lead flow + Lag 1 flow + Lag 2 flow + 1 gpm.

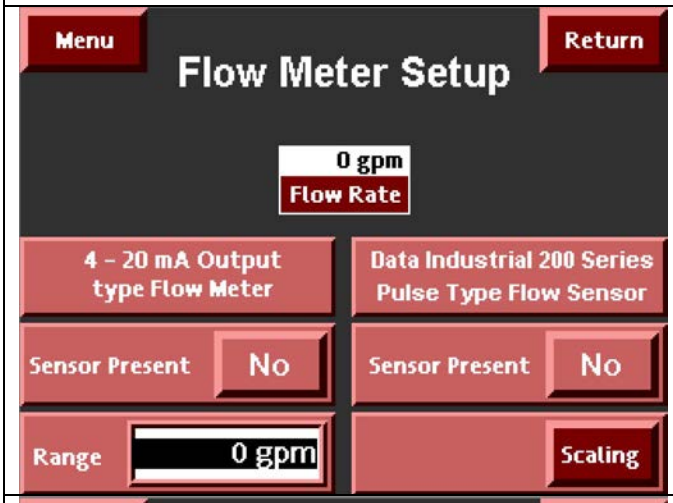

FLOW METER SETUP SCREEN:
Standard flow meter options include 4-20 mA flow signals and Data Industrial pulse insertion meters. Option selected in this sample screen is for a Data Industrial flow meter.

Touch Scaling button to complete Data Industrial setup.

If system is using a 4-20 mA flow signal, touch sensor present and enter max flow meter range.

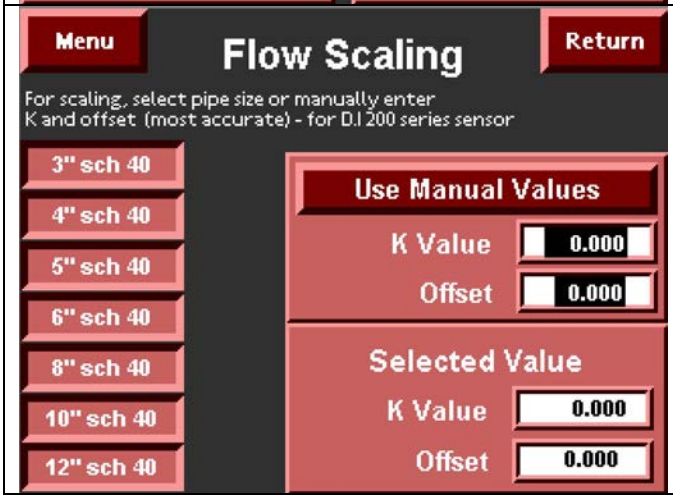

FLOW SCALING SCREEN:
Select the pipe size in which the flow meter is installed. Both K Value and Offset is automatically entered. If correct pipe size and type is not shown, select Manual and enter K Value and Offset provided by Data Industrial or TIGERFLOW.

Touch Return to go back to Config System menu.

TIGERFLOW Systems, Inc., Copyright 2007, Version 1.0

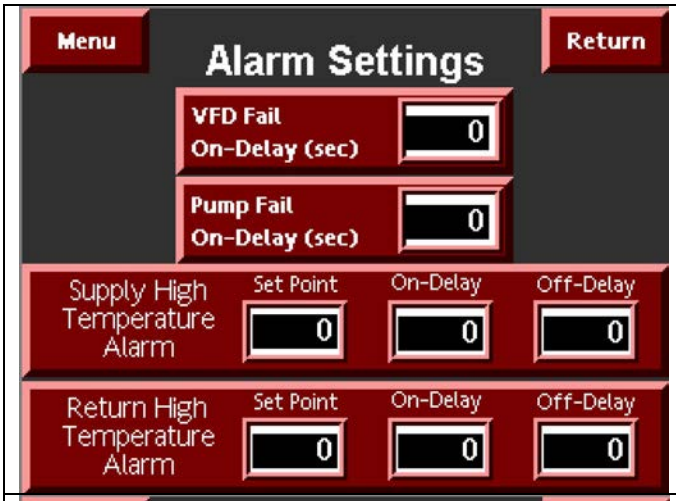

ALARM SETTINGS SCREEN:
VFD Fail ON-Delay is the time allowed for a drive to start when given a run command.

Pump Fail ON-Delay is the time allowed for the pump to break the DP switch installed across the pump suction and discharge.

High temperature setpoints can be set, and their respective on/off delays

PUMP ALTERNATION SCREEN:
Provides the options of automatic, manual or timed alternation. Auto is the default mode. In this mode lead pumps alternate on lead pump shutdown.

Touch the OFF button to the right of MANUAL / FIXED, to select the manual alternation mode. In this mode touching the Change Lead button causes pumps to alternate

Touch the OFF button to the right of MONTHLY / WKLY / DAILY to select the timed alternation mode. Touch the Setup button to configure this option.

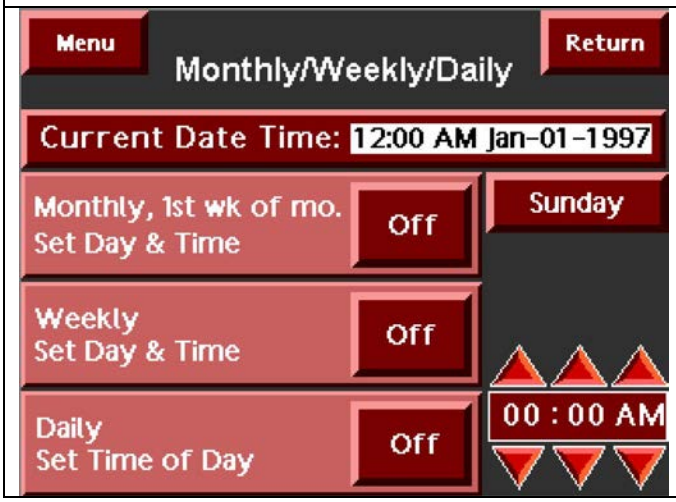

TIMED ALTERNATION SET UP SCREEN:
As shown (monthly option selected), pumps will alternate on the first Monday of each month at 12 pm. Selecting the weekly option will cause the pumps to alternate each Monday at 12 pm.

Adjust the day of the week by touching the current setting. A numeric keypad will appear. Enter a number between 1 and 7 (1=Monday, 7=Sunday).

Adjust the hour in like manor by touching the hour setting. Hour is based on the 24 hour clock.

TIGERFLOW Systems, Inc., Copyright 2007, Version 1.0

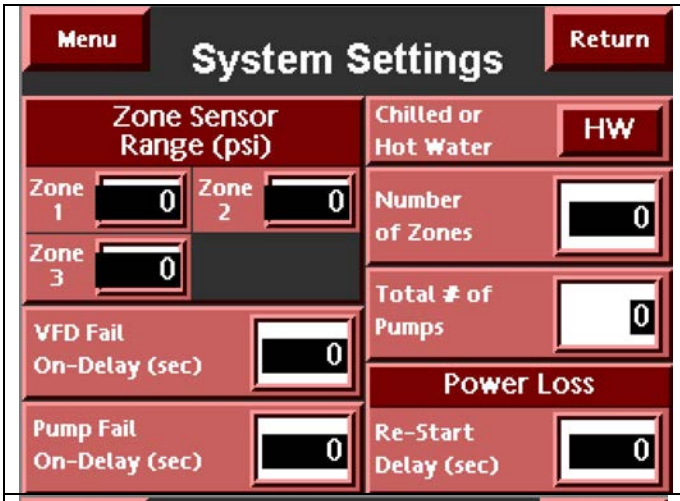

SYSTEM SETTINGS SCREEN:
This screen is used to set the number of zones to be monitored, with their respective sensor ranges. The number of pumps in the skid, and the on-delay times for VFD and pump failure.

The Power Loss Restart delay will set the time that has to elapse before restoring normal operation after a power loss.

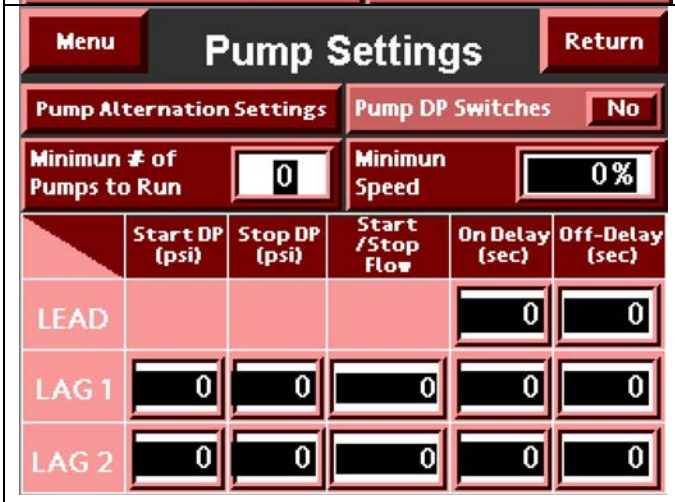

PUMP SETTINGS SCREEN:
Set minimum number of pumps to run in auto and minimum speed. Regardless of system load, no fewer than the minimum pumps will run at a speed greater than or equal to the minimum speed (Auto).

Set pump start and stop differential pressures DP, as well as, ON and OFF delay times.

Setting stop pressures for Lag pumps less than the lead pump stop pressure will help insure Lag pumps will not continue to run when not needed.

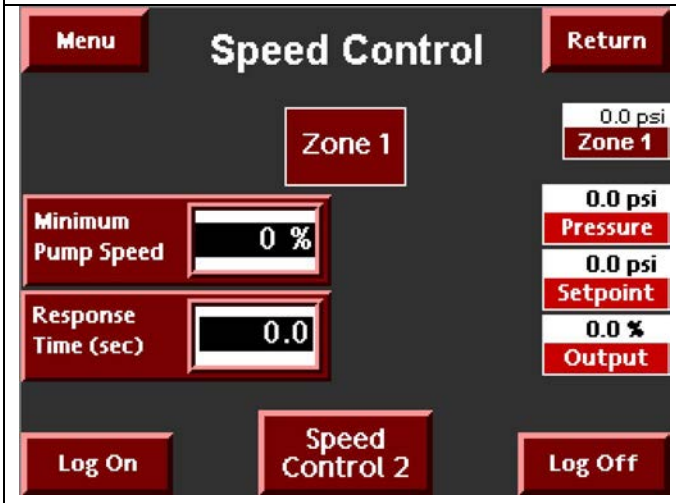

SPEED CONTROL SCREEN:
Provides access to customer accessible speed control variables.

Minimum Pump Speed is the minimum speed a pump will run in automatic.

Response Time is the frequency in which speed changes are made.

Press. Is the current system pressure

SP is the current system pressure set point plus 1 psi.

Output is the current % speed signal to drive. 50% speed is equivalent to 5.0 V DC. 75% speed is equivalent to 7.5 V DC.

TIGERFLOW Systems, Inc., Copyright 2007, Version 1.0

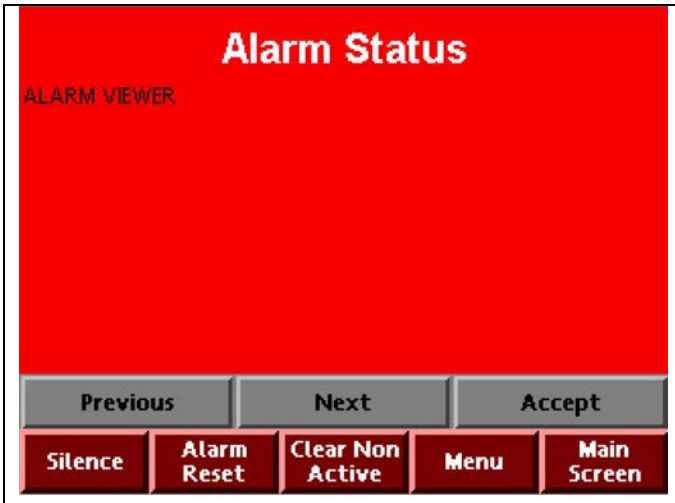	**ALARM / SYSTEM STATUS SCREEN:** Provides a list of all active system events. An event includes: -Pump starts and stops -Pump failure -Alarm acknowledgement / silence -Alarm reset -Remote System failure -System disable Touch Silence button to acknowledge an alarm condition and silence horn. Touch Alarm Reset to reset alarm condition.
	EVENT HISTORY SCREEN: Provides a history of the last ten system events. An event includes: Pump starts and stops Pump failure Alarms Alarm acknowledgement / silence Alarm reset Econo Mode System disable

Troubleshooting:

Code	Problem	Possible causes	Recommended Actions
TE-1	No display	**A.** Display screen saver is active.	Touch Screen and display should appear
		B. No 120 VAC control power	**1**. Verify control power disconnect is in ON position.
			2. Verify voltage between terminal 102 and 200 is 120 V. If not, verify there is power to the control panel. If power is present, turn control disconnect OFF and check control transformer fuses. If power is not present find some who can determine the cause of the outage.
			3. If power to panel is present and transformer fuses are not blown, replace control transformer.
		C. No DC control voltage	**1.** Measure DC voltage at the power supply (on most systems "+24V" and "0V" terminals). Voltage should be 24 V DC.
			2. If no DC power is present, check 1 amp glass fuse on AC side of power supply and replace if blown (factory provided a spare in the fuse holder for your convenience).
			3. If DC power is present at the power supply, check voltage between terminals 402 and 400. If no power is found, check 1 amp glass fuse on DC side of power supply. Replace if blown (factory provided a spare in the fuse holder for your convenience.). If fuse is good, check for loose connections at terminals 402 and 400. Check for loose power connection at HMI.

Code	Problem	Possible causes	Recommended Actions
TE-2	Touch screen not responding or not responding correctly to touch	**A.** Screen needs to be recalibrated	Contact your TIGERFLOW Representative.
		B. Screen is defective	Reset screen by cycling control power. NOTICE: Cycling control power will shutdown all pumps! If pump can not be shutdown, unplug and re-plug DC power plug on back of touch screen (HMI). If problem still exists, contact your TIGERFLOW Representative.
TE-3	PLC not found	**A.** Loose Serial Cable	1. Verify 9 pin serial plug is securely attached to COM1 on back side of HMI (touch screen).
			2. Verify round serial plug is securely plugged into ELC-PB14NNDR.
		B. PLC not running	1. Verify green power LED is illuminated on each ELC module. If not, check DC control voltage. **See TE-1.C**
			2. Verify ELC-PB14NNDR run/stop switch is in the RUN position. If it is not, slide it up to RUN Position.
			3. If problem still exists, contact your TIGERFLOW representative.
TE-4	Zone differential pressure reading does not match gauge(s).	**A.** Incorrect pressure transducer range	From main screen touch MENU, then CONFIG SYSTEM and SYSTEM SETTING. Verify maximum ranges shown for suction and system pressure transducers match the actual ranges of the installed transducers.
		B. Transducer problem	Check signal (2-10 V DC) by measuring the voltage between 203 and 400 (Zone 1 pressure) or between 204 and 400 (Zone 2 pressure). Voltage should be 2 V DC for 0 PSI and 10 V DC for max range, psi. Pressure is proportional to this signal, i.e., 6 V DC is 50% of max range, psi.
TE-5	Pressure transducer reading maximum value OR Transducer Failure Alarm	**A.** Pressure at or above transducer upper limit	1. Does pressure match gauge pressure? If not, measure pressure voltage signal (2-10 V DC)
			2. Check signal (2-10 V DC) by measuring the voltage between 203 and 400 (Zone 1 pressure) or between 204 and 400 (Zone 2 pressure). Voltage should be 10 V DC if pressure is reading full range. If reading is 24 V DC see **TE-3.B**.
		B. Loose termination	1. Check wire terminations at terminals 203, 204 and 400. Insert screw driver under resistor between 203 and 400. Gentle pull resistor away from terminal strip. If either leg of the resistor moves, re-insert the leg into the terminal and re-tighten terminal. Repeat this procedure for resistor between 204 and 400.
			2. Check transducer wire connection to terminal 402.
		C. Faulty pressure transducer	If recommended actions for TE-5. A and B do not correct the problem, replace the pressure transducer

Code	Problem	Possible causes	Recommended Actions
TE-6	Pump does not run when HMI display shows it running	**A.** Drive disconnect OFF	Check pump disconnect. Turn ON, if it is OFF.
		B. Drive in Alarm state.	Press RESET button or cycle drive power.
		C. Drive short circuit fuse(s) blown.	If this is the case, drive disconnect will be ON and drive will not be powered. Check fuses and replace if necessary.
		D. Drive does not have run permission.	1. Check terminations on run permissive cable(s): **Drive 1 = cable 231** **Drive 2 = cable 233** **Drive 3 = cable 235** **Drive 4 = cable 237**
			2. Jump drive run permissive
			3. If relay is energized, check AC volts to ground on relay terminals 11 and 14. Power should be present at all times on terminal 11, even when relay is not energized. Power should only be present on terminal 14 when either the relay is energized or the pump emergency override switch is ON.
		E. Drive does not have a speed reference.	1. Check terminations on dive speed reference cable(s): **Drive 1 = cable 251** **Drive 2 = cable 252** **Drive 3 = cable 253** **Drive 4 = cable 254**
			2. Change pump in question to hand and set hand speed to 50%. Speed reference voltage (0-10 V DC) between following terminals: **Drive 1 between terminals 251 and 400** **Drive 2 between terminals 252 and 400** **Drive 3 between terminals 253 and 400** **Drive 4 between terminals 254 and 400** Speed reference for the drive in question should be 5.0 Volts DC. If Voltage is not found verify: - PLC is in Run position and has power (Green LEDs illuminated) - There are no active alarms. If problem still exists, contact your TIGERFLOW Representative.
TE-7	Pump does not run. Controls are not calling for pump to run.	Alarm Condition	Touch MENU and SYSTEM STATUS. Check for alarm messages. Touch RESET to clear alarms. If alarm re-occurs, check alarm settings and see if alarm is valid. If alarm is valid, take actions to correct the condition. If alarm is not valid, contact your TIGERFLOW Representative.
		Pumps Turned OFF	Verify pump HOA switch is in HAND or AUTO position. Switch position is changed by touching the switch.

TIGERFLOW Systems, Inc., Copyright 2007, Version 1.0

Code	Problem	Possible causes	Recommended Actions
		System pressure is higher than pump start pressure.	This is normal for a properly operating pump system. If pump needs to be running, increase pump start pressure by touching MENU and PUMP START/STOP.

TIGERFLOW Systems, Inc., Copyright 2007, Version 1.0

Instruction Manual

VLT® HVAC Drive

Contents

1 Introduction 2-1
1.1 Purpose of the Manual 2-3
1.2 Additional Resources 2-3
1.3 Product Overview 2-3
1.4 Internal Adjustable Frequency Drive Controller Functions 2-3
1.5 Frame Sizes and Power Ratings 2-5

2 Installation 3-1
2.1 Installation Site Checklist 3-1
2.2 Adjustable Frequency Drive and Motor Pre-installation Checklist 3-1
2.3 Mechanical Installation 3-1
2.3.1 Cooling 3-1
2.3.2 Lifting 3-2
2.3.3 Mounting 3-2
2.3.4 Tightening Torques 3-2
2.4 Electrical Installation 3-3
2.4.1 Requirements 3-5
2.4.2 Grounding Requirements 3-6
2.4.2.1 Leakage Current (>3.5 mA) 3-6
2.4.2.2 Grounding Using Shielded Cable 3-6
2.4.3 Motor Connection 3-7
2.4.4 AC Line Power Connection 3-8
2.4.5 Control Wiring 3-8
2.4.5.1 Access 3-8
2.4.5.2 Control Terminal Types 3-9
2.4.5.3 Wiring to Control Terminals 3-11
2.4.5.4 Using Shielded Control Cables 3-11
2.4.5.5 Control Terminal Functions 3-12
2.4.5.6 Jumper Terminals 12 and 27 3-12
2.4.5.7 Terminal 53 and 54 Switches 3-12
2.4.5.8 Terminal 37 3-12
2.4.5.9 Mechanical Brake Control 3-15
2.4.6 Serial Communication 3-16

3 Start-up and Functional Testing 4-1
3.1 Pre-start 4-1
3.1.1 Safety Inspection 4-1
3.2 Applying Power to the Adjustable Frequency Drive 4-3

3.3 Basic Operational Programming 4-3
3.4 PM Motor Set-up 4-4
3.5 Automatic Motor Adaptation 4-5
3.6 Check Motor Rotation 4-5
3.7 Local Control Test 4-6
3.8 System Start-up 4-6
3.9 Acoustic Noise or Vibration 4-7

4 User Interface 5-1
4.1 Local Control Panel 5-1
4.1.1 LCP Layout 5-1
4.1.2 Setting LCP Display Values 5-2
4.1.3 Display Menu Keys 5-2
4.1.4 Navigation Keys 5-3
4.1.5 Operation Keys 5-3
4.2 Backup and Copying Parameter Settings 5-3
4.2.1 Uploading Data to the LCP 5-4
4.2.2 Downloading Data from the LCP 5-4
4.3 Restoring Default Settings 5-4
4.3.1 Recommended Initialization 5-4
4.3.2 Manual Initialization 5-4

5 About Adjustable Frequency Drive Programming 6-1
5.1 Introduction 6-1
5.2 Programming Example 6-1
5.3 Control Terminal Programming Examples 6-2
5.4 International/North American Default Parameter Settings 6-3
5.5 Parameter Menu Structure 6-4
5.5.1 Quick Menu Structure 6-5
5.5.2 Main menu structure 6-7
5.6 Remote Programming with MCT 10 Set-up Software 6-11

6 Application Set-Up Examples 7-1
6.1 Introduction 7-1
6.2 Application Examples 7-1

7 Status Messages 8-1
7.1 Status Display 8-1
7.2 Status Message Definitions Table 8-1

8 Warnings and Alarms 9-1
8.1 System Monitoring 9-1
8.2 Warning and Alarm Types 9-1
8.3 Warning and Alarm Displays 9-1
8.4 Warning and Alarm Definitions 9-2
9 Basic Troubleshooting 10-1
9.1 Start-up and Operation 10-1
10 Specifications 11-1
10.1 Power-dependent Specifications 11-1
10.2 General Technical Data 11-7
10.3 Fuse Tables 11-12
10.3.1 Branch Circuit Protection Fuses 11-12
10.3.2 UL and cUL Branch Circuit Protection Fuses 11-13
10.3.3 Substitute Fuses for 240 V 11-14
10.4 Connection Tightening Torques 11-14
12 Index 12-1

4 User Interface

4.1 Local Control Panel

The local control panel (LCP) is the combined display and keypad on the front of the unit. The LCP is the user interface to the adjustable frequency drive.

The LCP has several user functions.

- Start, stop, and control speed when in local control
- Display operational data, status, warnings and cautions
- Programming adjustable frequency drive functions
- Manually reset the adjustable frequency drive after a fault when auto-reset is inactive

An optional numeric LCP (NLCP) is also available. The NLCP operates in a manner similar to the LCP. See the Programming Guide for details on use of the NLCP.

NOTE!

The display contrast can be adjusted by pressing [STATUS] and the up/down key.

4.1.1 LCP Layout

The LCP is divided into four functional groups (see *Figure 4.1*).

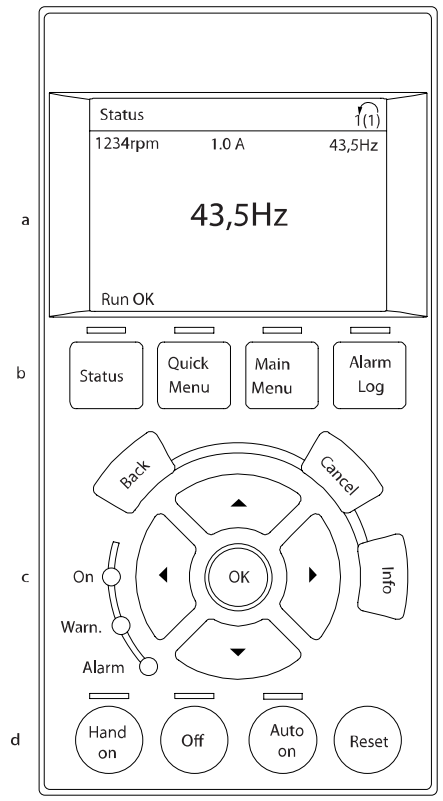

Figure 4.1 LCP

a. Display area.

b. Display menu keys for changing the display to show status options, programming, or error message history. Navigation keys for programming functions, moving the display cursor, and speed control in local operation. Also included are the status indicator lights.

c. Operational mode keys and reset.

4

4.1.2 Setting LCP Display Values

The display area is activated when the adjustable frequency drive receives power from AC line voltage, a DC bus terminal, or an external 24 V supply.

The information displayed on the LCP can be customized for user application.

- Each display readout has a parameter associated with it.
- Options are selected in the quick menu *Q3-13 Display Settings*.
- Display 2 has an alternate larger display option.
- The adjustable frequency drive status at the bottom line of the display is generated automatically and is not selectable.

Display	Parameter number	Default setting
1.1	0-20	Motor RPMs
1.2	0-21	Motor current
1.3	0-22	Motor power (kW)
2	0-23	Motor frequency
3	0-24	Reference in percent

Table 4.1

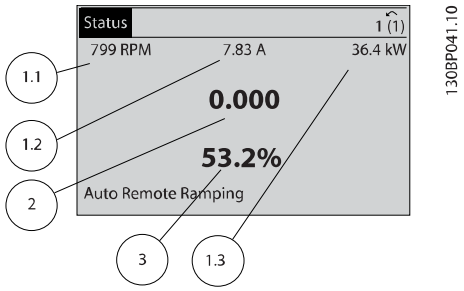

Figure 4.2

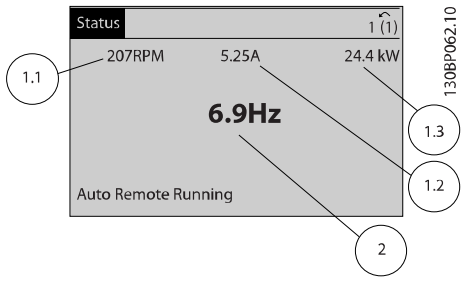

Figure 4.3

4.1.3 Display Menu Keys

Menu keys are used for menu access for parameter set-up, toggling through status display modes during normal operation, and viewing fault log data.

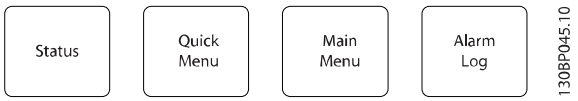

Figure 4.4

Key	Function
Status	Shows operational information. • In auto mode, press to toggle between status readout displays. • Press repeatedly to scroll through each status display. • Press [Status] plus [▲] or [▼] to adjust the display brightness. • The symbol in the upper right corner of the display shows the direction of motor rotation and which set-up is active. This is not programmable.
Quick Menu	Allows access to programming parameters for initial set-up instructions and many detailed application instructions. • Press to access *Q2 Quick Setup* for sequenced instructions to program the basic frequency controller set up • Follow the sequence of parameters as presented for the function set-up
Main Menu	Allows access to all programming parameters. • Press twice to access top-level index • Press once to return to the last location accessed. • Press to enter a parameter number for direct access to that parameter.
Alarm Log	Displays a list of current warnings, the last 10 alarms, and the maintenance log. • For details about the adjustable frequency drive before it entered the alarm mode, select the alarm number using the navigation keys and press [OK].

Table 4.2

4.1.4 Navigation Keys

are used for programming functions and moving the display cursor. The navigation keys also provide speed control in local (hand) operation. Three adjustable frequency drive status indicators are also located in this area.

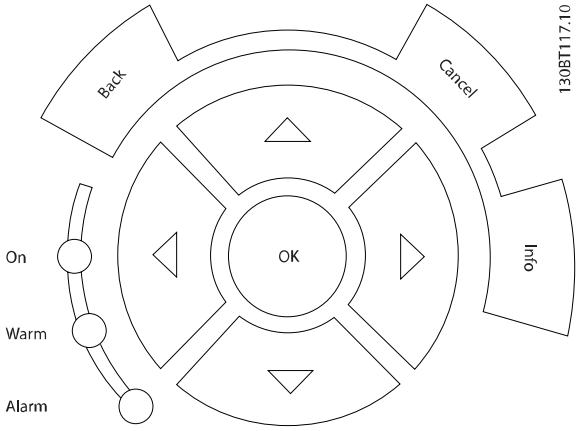

Figure 4.5

Key	Function
Back	Reverts to the previous step or list in the menu structure.
Cancel	Cancels the last change or command as long as the display mode has not changed.
Info	Press for a definition of the function being displayed.
Navigation Keys	Use the four navigation arrows to move between items in the menu.
OK	Use to access parameter groups or to enable a choice.

Table 4.3

Light	Indicator	Function
Green	ON	The ON light activates when the adjustable frequency drive receives power from AC line voltage, a DC bus terminal, or an external 24 V supply.
Yellow	WARN	When warning conditions are met, the yellow WARN light comes on and text appears in the display area identifying the problem.
Red	ALARM	A fault condition causes the red alarm light to flash and an alarm text is displayed.

Table 4.4

4.1.5 Operation Keys

Operation keys are found at the bottom of the LCP.

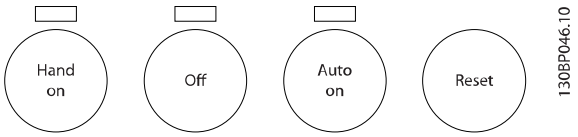

Figure 4.6

Key	Function
Hand On	Starts the adjustable frequency drive in local control. • Use the navigation keys to control adjustable frequency drive speed. • An external stop signal by control input or serial communication overrides the local hand on
Off	Stops the motor but does not remove power to the adjustable frequency drive.
Auto On	Puts the system in remote operational mode. • Responds to an external start command by control terminals or serial communication • Speed reference is from an external source
Reset	Resets the adjustable frequency drive manually after a fault has been cleared.

Table 4.5

4.2 Backup and Copying Parameter Settings

Programming data is stored internally in the adjustable frequency drive.

- The data can be uploaded into the LCP memory as a storage backup.
- Once stored in the LCP, the data can be downloaded back into the adjustable frequency drive.
- Data can also be downloaded into other adjustable frequency drives by connecting the LCP into those units and downloading the stored settings. (This is a quick way to program multiple units with the same settings.)
- Initialization of the adjustable frequency drive to restore factory default settings does not change data stored in the LCP memory.

⚠WARNING

UNINTENDED START!

When the adjustable frequency drive is connected to AC line power, the motor may start at any time. The adjustable frequency drive, motor, and any driven equipment must be in operational readiness. Failure to be in operational readiness when the adjustable frequency drive is connected to AC line power could result in death, serious injury, or equipment or property damage.

4

4.2.1 Uploading Data to the LCP

1. Press [Off] to stop the motor before uploading or downloading data.
2. Go to *0-50 LCP Copy*.
3. Press [OK].
4. Select *All to LCP*.
5. Press [OK]. A progress bar shows the uploading process.
6. Press [Hand On] or [Auto On] to return to normal operation.

4.2.2 Downloading Data from the LCP

1. Press [Off] to stop the motor before uploading or downloading data.
2. Go to *0-50 LCP Copy*.
3. Press [OK].
4. Select *All from LCP*.
5. Press [OK]. A progress bar shows the downloading process.
6. Press [Hand On] or [Auto On] to return to normal operation.

4.3 Restoring Default Settings

CAUTION

Initialization restores the unit to factory default settings. Any programming, motor data, localization, and monitoring records will be lost. Uploading data to the LCP provides a backup before initialization.

Restoring the adjustable frequency drive parameter settings back to default values is done by initialization of the adjustable frequency drive. Initialization can be through *14-22 Operation Mode* or manually.

- Initialization using *14-22 Operation Mode* does not change adjustable frequency drive data such as operating hours, serial communication selections, personal menu settings, fault log, alarm log, and other monitoring functions
- Using *14-22 Operation Mode* is generally recommended.
- Manual initialization erases all motor, programming, localization, and monitoring data and restores factory default settings.

4.3.1 Recommended Initialization

1. Press [Main Menu] twice to access parameters.
2. Scroll to *14-22 Operation Mode*.
3. Press [OK].
4. Scroll to *Initialization*.
5. Press [OK].
6. Remove power to the unit and wait for the display to turn off.
7. Apply power to the unit.

Default parameter settings are restored during start-up. This may take slightly longer than normal.

8. Alarm 80 is displayed.
9. Press [Reset] to return to operation mode.

4.3.2 Manual Initialization

1. Remove power to the unit and wait for the display to turn off.
2. Press and hold [Status], [Main Menu], and [OK] at the same time and apply power to the unit.

Factory default parameter settings are restored during startup. This may take slightly longer than normal.

Manual initialization does not the following adjustable frequency drive information.

- *15-00 Operating Hours*
- *15-03 Power-ups*
- *15-04 Over Temps*
- *15-05 Over Volts*

5.5.1 Quick Menu Structure

Q3-1 General Settings	0-24 Display Line 3 Large	1-00 Configuration Mode	**Q3-31 Single Zone Ext. Setpoint**	20-70 Closed-loop Type
Q3-10 Adv. Motor Settings	0-37 Display Text 1	20-12 Reference/Feedback Unit	1-00 Configuration Mode	20-71 PID Performance
1-90 Motor Thermal Protection	0-38 Display Text 2	20-13 Minimum Reference/Feedb.	20-12 Reference/Feedback Unit	20-72 PID Output Change
1-93 Thermistor Source	0-39 Display Text 3	20-14 Maximum Reference/Feedb.	20-13 Minimum Reference/Feedb.	20-73 Minimum Feedback Level
1-29 Automatic Motor Adaptation (AMA)	***Q3-2 Open-loop Settings***	6-22 Terminal 54 Low Current	20-14 Maximum Reference/Feedb.	20-74 Maximum Feedback Level
14-01 Switching Frequency	**Q3-20 Digital Reference**	6-24 Terminal 54 Low Ref./Feedb. Value	6-10 Terminal 53 Low Voltage	20-79 PID Autotuning
4-53 Warning Speed High	3-02 Minimum Reference	6-25 Terminal 54 High Ref./Feedb. Value	6-11 Terminal 53 High Voltage	**Q3-32 Multi Zone / Adv**
Q3-11 Analog Output	3-03 Maximum Reference	6-26 Terminal 54 Filter Time Constant	6-12 Terminal 53 Low Current	1-00 Configuration Mode
6-50 Terminal 42 Output	3-10 Preset Reference	6-27 Terminal 54 Live Zero	6-13 Terminal 53 High Current	3-15 Reference 1 Source
6-51 Terminal 42 Output Min Scale	5-13 Terminal 29 Digital Input	6-00 Live Zero Timeout Time	6-14 Terminal 53 Low Ref./Feedb. Value	3-16 Reference 2 Source
6-52 Terminal 42 Output Max Scale	5-14 Terminal 32 Digital Input	6-01 Live Zero Timeout Function	6-15 Terminal 53 High Ref./Feedb. Value	20-00 Feedback 1 Source
Q3-12 Clock Settings	5-15 Terminal 33 Digital Input	20-21 Setpoint 1	6-22 Terminal 54 Low Current	20-01 Feedback 1 Conversion
0-70 Date and Time	**Q3-21 Analog Reference**	20-81 PID Normal/ Inverse Control	6-24 Terminal 54 Low Ref./Feedb. Value	20-02 Feedback 1 Source Unit
0-71 Date Format	3-02 Minimum Reference	20-82 PID Start Speed [RPM]	6-25 Terminal 54 High Ref./Feedb. Value	20-03 Feedback 2 Source
0-72 Time Format	3-03 Maximum Reference	20-83 PID Start Speed [Hz]	6-26 Terminal 54 Filter Time Constant	20-04 Feedback 2 Conversion
0-74 DST/Summertime	6-10 Terminal 53 Low Voltage	20-93 PID Proportional Gain	6-27 Terminal 54 Live Zero	20-05 Feedback 2 Source Unit
0-76 DST/Summertime Start	6-11 Terminal 53 High Voltage	20-94 PID Integral Time	6-00 Live Zero Timeout Time	20-06 Feedback 3 Source
0-77 DST/Summertime End	6-12 Terminal 53 Low Current	20-70 Closed-loop Type	6-01 Live Zero Timeout Function	20-07 Feedback 3 Conversion
Q3-13 Display Settings	6-13 Terminal 53 High Current	20-71 PID Performance	20-81 PID Normal/ Inverse Control	20-08 Feedback 3 Source Unit
0-20 Display Line 1.1 Small	6-14 Terminal 53 Low Ref./Feedb. Value	20-72 PID Output Change	20-82 PID Start Speed [RPM]	20-12 Reference/Feedback Unit
0-21 Display Line 1.2 Small	6-15 Terminal 53 High Ref./Feedb. Value	20-73 Minimum Feedback Level	20-83 PID Start Speed [Hz]	20-13 Minimum Reference/Feedb.
0-22 Display Line 1.3 Small	***Q3-3 Closed-loop Settings***	20-74 Maximum Feedback Level	20-93 PID Proportional Gain	20-14 Maximum Reference/Feedb.
0-23 Display Line 2 Large	**Q3-30 Single Zone Int. Setpoint**	20-79 PID Autotuning	20-94 PID Integral Time	6-10 Terminal 53 Low Voltage

Table 5.2

5

5

6-11 Terminal 53 High Voltage	20-21 Setpoint 1	22-22 Low Speed Detection	22-21 Low Power Detection	22-87 Pressure at No-Flow Speed
6-12 Terminal 53 Low Current	20-22 Setpoint 2	22-23 No-Flow Function	22-22 Low Speed Detection	22-88 Pressure at Rated Speed
6-13 Terminal 53 High Current	20-81 PID Normal/ Inverse Control	*22-24 No-Flow Delay*	22-23 No-Flow Function	22-89 Flow at Design Point
6-14 Terminal 53 Low Ref./Feedb. Value	20-82 PID Start Speed [RPM]	22-40 Minimum Run Time	22-24 No-Flow Delay	22-90 Flow at Rated Speed
6-15 Terminal 53 High Ref./Feedb. Value	20-83 PID Start Speed [Hz]	22-41 Minimum Sleep Time	22-40 Minimum Run Time	1-03 Torque Characteristics
6-16 Terminal 53 Filter Time Constant	20-93 PID Proportional Gain	22-42 Wake-up Speed [RPM]	22-41 Minimum Sleep Time	1-73 Flying Start
6-17 Terminal 53 Live Zero	20-94 PID Integral Time	22-43 Wake-up Speed [Hz]	22-42 Wake-up Speed [RPM]	**Q3-42 Compressor Functions**
6-20 Terminal 54 Low Voltage	20-70 Closed-loop Type	22-44 Wake-up Ref./FB Difference	22-43 Wake-up Speed [Hz]	1-03 Torque Characteristics
6-21 Terminal 54 High Voltage	20-71 PID Performance	22-45 Setpoint Boost	22-44 Wake-up Ref./FB Difference	1-71 Start Delay
6-22 Terminal 54 Low Current	20-72 PID Output Change	22-46 Maximum Boost Time	22-45 Setpoint Boost	22-75 Short Cycle Protection
6-23 Terminal 54 High Current	20-73 Minimum Feedback Level	2-10 Brake Function	22-46 Maximum Boost Time	22-76 Interval between Starts
6-24 Terminal 54 Low Ref./Feedb. Value	20-74 Maximum Feedback Level	2-16 AC Brake Max. Current	22-26 Dry Pump Function	22-77 Minimum Run Time
6-25 Terminal 54 High Ref./Feedb. Value	20-79 PID Autotuning	2-17 Over-voltage Control	22-27 Dry Pump Delay	5-01 Terminal 27 Mode
6-26 Terminal 54 Filter Time Constant	***Q3-4 Application Settings***	1-73 Flying Start	22-80 Flow Compensation	5-02 Terminal 29 Mode
6-27 Terminal 54 Live Zero	**Q3-40 Fan Functions**	1-71 Start Delay	22-81 Square-linear Curve Approxi-mation	5-12 Terminal 27 Digital Input
6-00 Live Zero Timeout Time	22-60 Broken Belt Function	1-80 Function at Stop	22-82 Work Point Calculation	5-13 Terminal 29 Digital Input
6-01 Live Zero Timeout Function	22-61 Broken Belt Torque	2-00 DC Hold/Preheat Current	22-83 Speed at No-Flow [RPM]	5-40 Function Relay
4-56 Warning Feedback Low	22-62 Broken Belt Delay	4-10 Motor Speed Direction	22-84 Speed at No-Flow [Hz]	1-73 Flying Start
4-57 Warning Feedback High	4-64 Semi-Auto Bypass Set-up	**Q3-41 Pump Functions**	22-85 Speed at Design Point [RPM]	1-86 Trip Speed Low [RPM]
20-20 Feedback Function	1-03 Torque Characteristics	22-20 Low Power Auto Set-up	22-86 Speed at Design Point [Hz]	1-87 Trip Speed Low [Hz]

Table 5.3

5.5.2 Main menu structure

0- **	**Operation/Display**
0-0*	**Basic Settings**
0-01	Language
0-02	Motor Speed Unit
0-03	Regional Settings
0-04	Operating State at Power-up
0-05	Local Mode Unit
0-1*	**Set-up Operations**
0-10	Active Set-up
0-11	Programming Set-up
0-12	This Set-up Linked to
0-13	Readout: Linked Set-ups
0-14	Readout: Prog. Set-ups / Channel
0-2*	**LCP Display**
0-20	Display Line 1.1 Small
0-21	Display Line 1.2 Small
0-22	Display Line 1.3 Small
0-23	Display Line 2 Large
0-24	Display Line 3 Large
0-25	My Personal Menu
0-3*	**LCP Custom Readout**
0-30	Custom Readout Unit
0-31	Custom Readout Min Value
0-32	Custom Readout Max Value
0-37	Display Text 1
0-38	Display Text 2
0-39	Display Text 3
0-4*	**LCP Keypad**
0-40	[Hand on] Key on LCP
0-41	[Off] Key on LCP
0-42	[Auto on] Key on LCP
0-43	[Reset] Key on LCP
0-44	[Off/Reset] Key on LCP
0-45	[Drive Bypass] Key on LCP
0-5*	**Copy/Save**
0-50	LCP Copy
0-51	Set-up Copy
0-6*	**Password**
0-60	Main Menu Password
0-61	Access to Main Menu w/o Password
0-65	Personal Menu Password
0-66	Access to Personal Menu w/o Password
0-7*	**Clock Settings**
0-70	Date and Time
0-71	Date Format
0-72	Time Format
0-74	DST/Summertime
0-76	DST/Summertime Start
0-77	DST/Summertime End
0-79	Clock Fault
0-81	Working Days
0-82	Additional Working Days
0-83	Additional Non-Working Days
0-89	Date and Time Readout
1- **	**Load and Motor**
1-0*	**General Settings**
1-00	Configuration Mode
1-03	Torque Characteristics
1-06	Clockwise Direction
1-1*	**Motor Selection**
1-10	Motor Construction
1-1*	**VVC+ PM**
1-14	Damping Gain
1-15	Low Speed Filter Time Const.
1-16	High Speed Filter Time Const.
1-17	Voltage Filter Time Const.
1-2*	**Motor Data**
1-20	Motor Power [kW]
1-21	Motor Power [HP]
1-22	Motor Voltage
1-23	Motor Frequency
1-24	Motor Current
1-25	Motor Nominal Speed
1-26	Motor Cont. Rated Torque
1-28	Motor Rotation Check
1-29	Automatic Motor Adaptation (AMA)
1-3*	**Adv. Motor Data**
1-30	Stator Resistance (Rs)
1-31	Rotor Resistance (Rr)
1-35	Main Reactance (Xh)
1-36	Iron Loss Resistance (Rfe)
1-37	d-axis Inductance (Ld)
1-39	Motor Poles
1-40	Back EMF at 1,000 RPM
1-5*	**Load Indep. Setting**
1-50	Motor Magnetization at Zero Speed
1-51	Min Speed Normal Magnetizing [RPM]
1-52	Min Speed Normal Magnetizing [Hz]
1-58	Flystart Test Pulses Current
1-59	Flystart Test Pulses Frequency
1-6*	**Load Depend. Setting**
1-60	Low Speed Load Compensation
1-61	High Speed Load Compensation
1-62	Slip Compensation
1-63	Slip Compensation Time Constant
1-64	Resonance Dampening
1-65	Resonance Dampening Time Constant
1-66	Min. Current at Low Speed
1-7*	**Start Adjustments**
1-70	PM Start Mode
1-71	Start Delay
1-72	Start Function
1-73	Flying Start
1-77	Compressor Start Max Speed [RPM]
1-78	Compressor Start Max Speed [Hz]
1-79	Compressor Start Max Time to Trip
1-8*	**Stop Adjustments**
1-80	Function at Stop
1-81	Min Speed for Function at Stop [RPM]
1-82	Min Speed for Function at Stop [Hz]
1-86	Trip Speed Low [RPM]
1-87	Trip Speed Low [Hz]
1-9*	**Motor Temperature**
1-90	Motor Thermal Protection
1-91	Motor External Fan
1-93	Thermistor Source
2- **	**Brakes**
2-0*	**DC Brake**
2-00	DC Hold/Preheat Current
2-01	DC Brake Current
2-02	DC Braking Time
2-03	DC Brake Cut-in Speed [RPM]
2-04	DC Brake Cut-in Speed [Hz]
2-06	Parking Current
2-07	Parking Time
2-1*	**Brake Energy Funct.**
2-10	Brake Function
2-11	Brake Resistor (ohm)
2-12	Brake Power Limit (kW)
2-13	Brake Power Monitoring
2-15	Brake Check
2-16	AC brake Max. Current
2-17	Over-voltage Control
3- **	**Reference / Ramps**
3-0*	**Reference Limits**
3-02	Minimum Reference
3-03	Maximum Reference
3-04	Reference Function
3-1*	**References**
3-10	Preset Reference
3-11	Jog Speed [Hz]
3-13	Reference Site
3-14	Preset Relative Reference
3-15	Reference 1 Source
3-16	Reference 2 Source
3-17	Reference 3 Source
3-19	Jog Speed [RPM]
3-4*	**Ramp 1**
3-41	Ramp 1 Ramp-up Time
3-42	Ramp 1 Ramp-down Time
3-5*	**Ramp 2**
3-51	Ramp 2 Ramp-up Time
3-52	Ramp 2 Ramp-down Time
3-8*	**Other Ramps**
3-80	Jog Ramp Time
3-81	Quick Stop Ramp Time
3-82	Starting Ramp-up Time
3-9*	**Digital Pot.Meter**
3-90	Step Size
3-91	Ramp Time
3-92	Power Restore
3-93	Maximum Limit
3-94	Minimum Limit
3-95	Ramp Delay
4- **	**Limits / Warnings**
4-1*	**Motor Limits**
4-10	Motor Speed Direction
4-11	Motor Speed Low Limit [RPM]
4-12	Motor Speed Low Limit [Hz]
4-13	Motor Speed High Limit [RPM]
4-14	Motor Speed High Limit [Hz]
4-16	Torque Limit Motor Mode
4-17	Torque Limit Generator Mode
4-18	Current Limit
4-19	Max Output Frequency
4-5*	**Adj. Warnings**
4-50	Warning Current Low
4-51	Warning Current High
4-52	Warning Speed Low
4-53	Warning Speed High
4-54	Warning Reference Low
4-55	Warning Reference High
4-56	Warning Feedback Low
4-57	Warning Feedback High
4-58	Missing Motor Phase Function
4-6*	**Speed Bypass**
4-60	Bypass Speed From [RPM]
4-61	Bypass Speed From [Hz]
4-62	Bypass Speed To [RPM]
4-63	Bypass Speed To [Hz]
4-64	Semi-Auto Bypass Set-up
5- **	**Digital In/Out**
5-0*	**Digital I/O mode**
5-00	Digital I/O Mode
5-01	Terminal 27 Mode
5-02	Terminal 29 Mode
5-1*	**Digital Inputs**
5-10	Terminal 18 Digital Input
5-11	Terminal 19 Digital Input
5-12	Terminal 27 Digital Input
5-13	Terminal 29 Digital Input
5-14	Terminal 32 Digital Input
5-15	Terminal 33 Digital Input
5-16	Terminal X30/2 Digital Input
5-17	Terminal X30/3 Digital Input
5-18	Terminal X30/4 Digital Input
5-19	Terminal 37 Safe Stop
5-3*	**Digital Outputs**
5-30	Terminal 27 Digital Output
5-31	Terminal 29 Digital Output
5-32	Term X30/6 Digi Out (MCB 101)
5-33	Term X30/7 Digi Out (MCB 101)
5-4*	**Relays**
5-40	Function Relay
5-41	On Delay, Relay
5-42	Off Delay, Relay
5-5*	**Pulse Input**
5-50	Term. 29 Low Frequency
5-51	Term. 29 High Frequency
5-52	Term. 29 Low Ref./Feedb. Value
5-53	Term. 29 High Ref./Feedb. Value
5-54	Pulse Filter Time Constant #29
5-55	Term. 33 Low Frequency
5-56	Term. 33 High Frequency
5-57	Term. 33 Low Ref./Feedb. Value
5-58	Term. 33 High Ref./Feedb. Value
5-59	Pulse Filter Time Constant #33
5-6*	**Pulse Output**
5-60	Terminal 27 Pulse Output Variable
5-62	Pulse Output Max Freq #27
5-63	Terminal 29 Pulse Output Variable
5-65	Pulse Output Max Freq #29
5-66	Terminal X30/6 Pulse Output Variable
5-68	Pulse Output Max Freq #X30/6
5-8*	**I/O Options**
5-80	AHF Cap Reconnect Delay
5-9*	**Bus Controlled**
5-90	Digital & Relay Bus Control
5-93	Pulse Out #27 Bus Control
5-94	Pulse Out #27 Timeout Preset
5-95	Pulse Out #29 Bus Control
5-96	Pulse Out #29 Timeout Preset
5-97	Pulse Out #X30/6 Bus Control
5-98	Pulse Out #X30/6 Timeout Preset
6- **	**Analog In/Out**
6-0*	**Analog I/O Mode**
6-00	Live Zero Timeout Time
6-01	Live Zero Timeout Function
6-02	Fire Mode Live Zero Timeout Function
6-1*	**Analog Input 53**
6-10	Terminal 53 Low Voltage
6-11	Terminal 53 High Voltage
6-12	Terminal 53 Low Current
6-13	Terminal 53 High Current
6-14	Terminal 53 Low Ref./Feedb. Value
6-15	Terminal 53 High Ref./Feedb. Value
6-16	Terminal 53 Filter Time Constant
6-17	Terminal 53 Live Zero
6-2*	**Analog Input 54**
6-20	Terminal 54 Low Voltage
6-21	Terminal 54 High Voltage
6-22	Terminal 54 Low Current
6-23	Terminal 54 High Current
6-24	Terminal 54 Low Ref./Feedb. Value
6-25	Terminal 54 High Ref./Feedb. Value
6-26	Terminal 54 Filter Time Constant
6-27	Terminal 54 Live Zero
6-3*	**Analog Input X30/11**
6-30	Terminal X30/11 Low Voltage
6-31	Terminal X30/11 High Voltage
6-34	Term. X30/11 Low Ref./Feedb. Value
6-35	Term. X30/11 High Ref./Feedb. Value
6-36	Term. X30/11 Filter Time Constant
6-37	Term. X30/11 Live Zero
6-4*	**Analog Input X30/12**
6-40	Terminal X30/12 Low Voltage
6-41	Terminal X30/12 High Voltage
6-44	Term. X30/12 Low Ref./Feedb. Value
6-45	Term. X30/12 High Ref./Feedb. Value
6-46	Term. X30/12 Filter Time Constant
6-47	Term. X30/12 Live Zero
6-5*	**Analog Output 42**
6-50	Terminal 42 Output
6-51	Terminal 42 Output Min Scale
6-52	Terminal 42 Output Max Scale
6-53	Terminal 42 Output Bus Control

MG11AH22 - VLT® is a registered Danfoss trademark

6-54 Terminal 42 Output Timeout Preset
6-55 Analog Output Filter
6-6* Analog Output X30/8
6-60 Terminal X30/8 Output
6-61 Terminal X30/8 Min. Scale
6-62 Terminal X30/8 Max. Scale
6-63 Terminal X30/8 Output Bus Control
6-64 Terminal X30/8 Output Timeout Preset
8- Comm. and Options**
8-0* General Settings
8-01 Control Site
8-02 Control Source
8-03 Control Timeout Time
8-04 Control Timeout Function
8-05 End-of-Timeout Function
8-06 Reset Control Timeout
8-07 Diagnosis Trigger
8-08 Readout Filtering
8-09 Communication Charset
8-1* Control Settings
8-10 Control Profile
8-13 Configurable Status Word STW
8-3* FC Port Settings
8-30 Protocol
8-31 Address
8-32 Baud Rate
8-33 Parity / Stop Bits
8-34 Estimated cycle time
8-35 Minimum Response Delay
8-36 Maximum Response Delay
8-37 Maximum Inter-Char Delay
8-4* FC MC protocol set
8-40 Telegram Selection
8-42 PCD write configuration
8-43 PCD read configuration
8-5* Digital/Bus
8-50 Coasting Select
8-52 DC Brake Select
8-53 Start Select
8-54 Reversing Select
8-55 Set-up Select
8-56 Preset Reference Select
8-7* BACnet
8-70 BACnet Device Instance
8-72 MS/TP Max Masters
8-73 MS/TP Max Info Frames
8-74 "I-Am" Service
8-75 Initialization Password
8-8* FC Port Diagnostics
8-80 Bus Message Count
8-81 Bus Error Count
8-82 Slave Messages Rcvd
8-83 Slave Error Count
8-84 Slave Messages Sent
8-85 Slave Timeout Errors
8-89 Diagnostics Count
8-9* Bus Jog / Feedback
8-90 Bus Jog 1 Speed
8-91 Bus Jog 2 Speed
8-94 Bus Feedback 1
8-95 Bus Feedback 2
8-96 Bus Feedback 3
9- Profibus**
9-00 Setpoint
9-07 Actual Value
9-15 PCD Write Configuration
9-16 PCD Read Configuration
9-18 Node Address
9-22 Telegram Selection
9-23 Parameters for Signals
9-27 Parameter Edit
9-28 Process Control
9-44 Fault Message Counter
9-45 Fault Code
9-47 Fault Number
9-52 Fault Situation Counter
9-53 Profibus Warning Word
9-63 Actual Baud Rate
9-64 Device Identification
9-65 Profile Number
9-67 Control Word 1
9-68 Status Word 1
9-71 Profibus Save Data Values
9-72 ProfibusDriveReset
9-75 DO Identification
9-80 Defined Parameters (1)
9-81 Defined Parameters (2)
9-82 Defined Parameters (3)
9-83 Defined Parameters (4)
9-84 Defined Parameters (5)
9-90 Changed Parameters (1)
9-91 Changed Parameters (2)
9-92 Changed Parameters (3)
9-93 Changed Parameters (4)
9-94 Changed Parameters (5)
9-99 Profibus Revision Counter
10- CAN Fieldbus**
10-0* Common Settings
10-00 CAN Protocol
10-01 Baud Rate Select
10-02 MAC ID
10-05 Readout Transmit Error Counter
10-06 Readout Receive Error Counter
10-07 Readout Bus Off Counter
10-1* DeviceNet
10-10 Process Data Type Selection
10-11 Process Data Config Write
10-12 Process Data Config Read
10-13 Warning Parameter
10-14 Net Reference
10-15 Net Control
10-2* COS Filters
10-20 COS Filter 1
10-21 COS Filter 2
10-22 COS Filter 3
10-23 COS Filter 4
10-3* Parameter Access
10-30 Array Index
10-31 Store Data Values
10-32 Devicenet Revision
10-33 Store Always
10-34 DeviceNet Product Code
10-39 Devicenet F Parameters
11- LonWorks**
11-0* LonWorks ID
11-00 Neuron ID
11-1* LON Functions
11-10 Drive Profile
11-15 LON Warning Word
11-17 XIF Revision
11-18 LonWorks Revision
11-2* LON Param. Access
11-21 Store Data Values
12- Ethernet**
12-0* IP Settings
12-00 IP Address Assignment
12-01 IP Address
12-02 Subnet Mask
12-03 Default Gateway
12-04 DHCP Server
12-05 Lease Expires
12-06 Name Servers
12-07 Domain Name
12-08 Host Name
12-09 Physical Address
12-1* Ethernet Link Parameters
12-10 Link Status
12-11 Link Duration
12-12 Auto Negotiation
12-13 Link Speed
12-14 Link Duplex
12-2* Process Data
12-20 Control Instance
12-21 Process Data Config Write
12-22 Process Data Config Read
12-27 Primary Master
12-28 Store Data Values
12-29 Store Always
12-3* EtherNet/IP
12-30 Warning Parameter
12-31 Net Reference
12-32 Net Control
12-33 CIP Revision
12-34 CIP Product Code
12-35 EDS Parameter
12-37 COS Inhibit Timer
12-38 COS Filter
12-4* Modbus TCP
12-40 Status Parameter
12-41 Slave Message Count
12-42 Slave Exception Message Count
12-8* Other Ethernet Services
12-80 FTP Server
12-81 HTTP Server
12-82 SMTP Service
12-89 Transparent Socket Channel Port
12-9* Advanced Ethernet Services
12-90 Cable Diagnostic
12-91 Auto Cross Over
12-92 IGMP Snooping
12-93 Cable Error Length
12-94 Broadcast Storm Protection
12-95 Broadcast Storm Filter
12-96 Port Config
12-98 Interface Counters
12-99 Media Counters
13- Smart Logic**
13-0* SLC Settings
13-00 SL Controller Mode
13-01 Start Event
13-02 Stop Event
13-03 Reset SLC
13-1* Comparators
13-10 Comparator Operand
13-11 Comparator Operator
13-12 Comparator Value
13-2* Timers
13-20 SL Controller Timer
13-4* Logic Rules
13-40 Logic Rule Boolean 1
13-41 Logic Rule Operator 1
13-42 Logic Rule Boolean 2
13-43 Logic Rule Operator 2
13-44 Logic Rule Boolean 3
13-5* States
13-51 SL Controller Event
13-52 SL Controller Action
14- Special Functions**
14-0* Inverter Switching
14-00 Switching Pattern
14-01 Switching Frequency
14-03 Overmodulation
14-04 PWM Random
14-1* Mains On/Off
14-10 Line Failure
14-11 Mains Voltage at Mains Fault
14-12 Function at Mains Imbalance
14-2* Reset Functions
14-20 Reset Mode
14-21 Automatic Restart Time
14-22 Operation Mode
14-23 Typecode Setting
14-25 Trip Delay at Torque Limit
14-26 Trip Delay at Inverter Fault
14-28 Production Settings
14-29 Service Code
14-3* Current Limit Ctrl.
14-30 Current Lim Ctrl, Proportional Gain
14-31 Current Lim Ctrl, Integration Time
14-32 Current Lim Ctrl, Filter Time
14-4* Energy Optimizing
14-40 VT Level
14-41 AEO Minimum Magnetization
14-42 Minimum AEO Frequency
14-43 Motor Cos Phi
14-5* Environment
14-50 RFI Filter
14-51 DC Link Compensation
14-52 Fan Control
14-53 Fan Monitor
14-55 Output Filter
14-59 Actual Number of Inverter Units
14-6* Auto Derate
14-60 Function at Over Temperature
14-61 Function at Inverter Overload
14-62 Inv. Overload Derate Current
15- Drive Information**
15-0* Operating Data
15-00 Operating Hours
15-01 Running Hours
15-02 kWh Counter
15-03 Power-ups
15-04 Over Temps
15-05 Over Volts
15-06 Reset kWh Counter
15-07 Reset Running Hours Counter
15-08 Number of Starts
15-1* Data Log Settings
15-10 Logging Source
15-11 Logging Interval
15-12 Trigger Event
15-13 Logging Mode
15-14 Samples Before Trigger
15-2* Historic Log
15-20 Historic Log: Event
15-21 Historic Log: Value
15-22 Historic Log: Time
15-23 Historic Log: Date and Time
15-3* Alarm Log
15-30 Alarm Log: Error Code
15-31 Alarm Log: Value
15-32 Alarm Log: Time
15-33 Alarm Log: Date and Time
15-4* Drive Identification
15-40 FC Type
15-41 Power Section
15-42 Voltage
15-43 Software Version
15-44 Ordered Typecode String
15-45 Actual Typecode String
15-46 Adj Freq Dr Ordering No.
15-47 Power Card Ordering No.
15-48 LCP ID Num.
15-49 SW ID Control Card
15-50 SW ID Power Card
15-51 Adj Freq Dr Serial No.
15-53 Power Card Serial Number
15-55 Vendor URL
15-56 Vendor Name
15-59 CSIV Filename
15-6* Option Ident
15-60 Option Mounted
15-61 Option SW Version
15-62 Option Ordering No

15-63 Option Serial No
15-70 Option in Slot A
15-71 Slot A Option SW Version
15-72 Option in Slot B
15-73 Slot B Option SW Version
15-74 Option in Slot C0
15-75 Slot C0 Option SW Version
15-76 Option in Slot C1
15-77 Slot C1 Option SW Version
15-9* Parameter Info
15-92 Defined Parameters
15-93 Modified Parameters
15-98 Drive Identification
15-99 Parameter Metadata
16- Data Readouts**
16-0* General Status
16-00 Control Word
16-01 Reference [Unit]
16-02 Reference [%]
16-03 Status Word
16-05 Main Actual Value [%]
16-09 Custom Readout
16-1* Motor Status
16-10 Power [kW]
16-11 Power [hp]
16-12 Motor Voltage
16-13 Frequency
16-14 Motor Current
16-15 Frequency [%]
16-16 Torque [Nm]
16-17 Speed [RPM]
16-18 Motor Thermal
16-22 Torque [%]
16-26 Power Filtered [kW]
16-27 Power Filtered [hp]
16-3* Drive Status
16-30 DC Link Voltage
16-32 Brake Energy /s
16-33 Brake Energy /2 min
16-34 Heatsink Temp.
16-35 Inverter Thermal
16-36 Inv. Nom. Current
16-37 Inv. Max. Current
16-38 SL Controller State
16-39 Control Card Temp.
16-40 Logging Buffer Full
16-41 Logging Buffer Full
16-43 Timed Actions Status
16-49 Current Fault Source
16-5* Ref. & Feedb.
16-50 External Reference
16-52 Feedback [Unit]
16-53 Digi Pot Reference
16-54 Feedback 1 [Unit]
16-55 Feedback 2 [Unit]
16-56 Feedback 3 [Unit]
16-58 PID Output [%]
16-6* Inputs & Outputs
16-60 Digital Input
16-61 Terminal 53 Switch Setting
16-62 Analog Input 53
16-63 Terminal 54 Switch Setting
16-64 Analog Input 54
16-65 Analog Output 42 [mA]
16-66 Digital Output [bin]
16-67 Pulse Input #29 [Hz]
16-68 Pulse Input #33 [Hz]
16-69 Pulse Output #27 [Hz]
16-70 Pulse Output #29 [Hz]
16-71 Relay Output [bin]
16-72 Counter A
16-73 Counter B
16-75 Analog In X30/11
16-76 Analog In X30/12
16-77 Analog Out X30/8 [mA]
16-8* Fieldbus & FC Port
16-80 Serial communication bus CTW 1
16-82 Serial communication bus REF 1
16-84 Comm. Option STW
16-85 FC Port CTW 1
16-86 FC Port REF 1
16-9* Diagnosis Readouts
16-90 Alarm Word
16-91 Alarm Word 2
16-92 Warning Word
16-93 Warning Word 2
16-94 Ext. Status Word
16-95 Ext. Status Word 2
16-96 Maintenance Word
18- Info & Readouts**
18-0* Maintenance Log
18-00 Maintenance Log: Item
18-01 Maintenance Log: Action
18-02 Maintenance Log: Time
18-03 Maintenance Log: Date and Time
18-1* Fire Mode Log
18-10 Fire Mode Log: Event
18-11 Fire Mode Log: Time
18-12 Fire Mode Log: Date and Time
18-3* Inputs & Outputs
18-30 Analog Input X42/1
18-31 Analog Input X42/3
18-32 Analog Input X42/5
18-33 Analog Out X42/7 [V]
18-34 Analog Out X42/9 [V]
18-35 Analog Out X42/11 [V]
18-36 Analog Input X48/2 [mA]
18-37 Temp. Input X48/4
18-38 Temp. Input X48/7
18-39 Temp. Input X48/10
18-5* Ref. & Feedb.
18-50 Sensorless Readout [unit]
20- Drive Closed-Loop**
20-0* Feedback
20-00 Feedback 1 Source
20-01 Feedback 1 Conversion
20-02 Feedback 1 Source Unit
20-03 Feedback 2 Source
20-04 Feedback 2 Conversion
20-05 Feedback 2 Source Unit
20-06 Feedback 3 Source
20-07 Feedback 3 Conversion
20-08 Feedback 3 Source Unit
20-12 Reference/Feedback Unit
20-13 Minimum Reference/Feedb.
20-14 Maximum Reference/Feedb.
20-2* Feedback/Setpoint
20-20 Feedback Function
20-21 Setpoint 1
20-22 Setpoint 2
20-23 Setpoint 3
20-3* Feedb. Adv. Conv.
20-30 Refrigerant
20-31 User-defined Refrigerant A1
20-32 User-defined Refrigerant A2
20-33 User-defined Refrigerant A3
20-34 Duct 1 Area [m2]
20-35 Duct 1 Area [in2]
20-36 Duct 2 Area [m2]
20-37 Duct 2 Area [in2]
20-38 Air Density Factor [%]
20-6* Sensorless
20-60 Sensorless Unit
20-69 Sensorless Information
20-7* PID Autotuning
20-70 Closed-loop Type
20-71 PID Performance
20-72 PID Output Change
20-73 Minimum Feedback Level
20-74 Maximum Feedback Level
20-79 PID Autotuning
20-8* PID Basic Settings
20-81 PID Normal/ Inverse Control
20-82 PID Start Speed [RPM]
20-83 PID Start Speed [Hz]
20-84 On Reference Bandwidth
20-9* PID Controller
20-91 PID Anti Windup
20-93 PID Proportional Gain
20-94 PID Integral Time
20-95 PID Differentiation Time
20-96 PID Diff. Gain Limit
21- Ext. Closed-Loop**
21-0* Ext. CL Autotuning
21-00 Closed-loop Type
21-01 PID Performance
21-02 PID Output Change
21-03 Minimum Feedback Level
21-04 Maximum Feedback Level
21-09 PID Autotuning
21-1* Ext. CL 1 Ref./Fb.
21-10 Ext. 1 Ref./Feedback Unit
21-11 Ext. 1 Minimum Reference
21-12 Ext. 1 Maximum Reference
21-13 Ext. 1 Reference Source
21-14 Ext. 1 Feedback Source
21-15 Ext. 1 Setpoint
21-17 Ext. 1 Reference [Unit]
21-18 Ext. 1 Feedback [Unit]
21-19 Ext. 1 Output [%]
21-2* Ext. CL 1 PID
21-20 Ext. 1 Normal/Inverse Control
21-21 Ext. 1 Proportional Gain
21-22 Ext. 1 Integral Time
21-23 Ext. 1 Differentiation Time
21-24 Ext. 1 Dif. Gain Limit
21-3* Ext. CL 2 Ref./Fb.
21-30 Ext. 2 Ref./Feedback Unit
21-31 Ext. 2 Minimum Reference
21-32 Ext. 2 Maximum Reference
21-33 Ext. 2 Reference Source
21-34 Ext. 2 Feedback Source
21-35 Ext. 2 Setpoint
21-37 Ext. 2 Reference [Unit]
21-38 Ext. 2 Feedback [Unit]
21-39 Ext. 2 Output [%]
21-4* Ext. CL 2 PID
21-40 Ext. 2 Normal/Inverse Control
21-41 Ext. 2 Proportional Gain
21-42 Ext. 2 Integral Time
21-43 Ext. 2 Differentiation Time
21-44 Ext. 2 Dif. Gain Limit
21-5* Ext. CL 3 Ref./Fb.
21-50 Ext. 3 Ref./Feedback Unit
21-51 Ext. 3 Minimum Reference
21-52 Ext. 3 Maximum Reference
21-53 Ext. 3 Reference Source
21-54 Ext. 3 Feedback Source
21-55 Ext. 3 Setpoint
21-57 Ext. 3 Reference [Unit]
21-58 Ext. 3 Feedback [Unit]
21-59 Ext. 3 Output [%]
21-6* Ext. CL 3 PID
21-60 Ext. 3 Normal/Inverse Control
21-61 Ext. 3 Proportional Gain
21-62 Ext. 3 Integral Time
21-63 Ext. 3 Differentiation Time
21-64 Ext. 3 Dif. Gain Limit
22- Appl. Functions**
22-0* Miscellaneous
22-00 External Interlock Delay
22-01 Power Filter Time
22-2* No-Flow Detection
22-20 Low Power Auto Set-up
22-21 Low Power Detection
22-22 Low Speed Detection
22-23 No-Flow Function
22-24 No-Flow Delay
22-26 Dry Pump Function
22-27 Dry Pump Delay
22-3* No-Flow Power Tuning
22-30 No-Flow Power
22-31 Power Correction Factor
22-32 Low Speed [RPM]
22-33 Low Speed [Hz]
22-34 Low Speed Power [kW]
22-35 Low Speed Power [HP]
22-36 High Speed [RPM]
22-37 High Speed [Hz]
22-38 High Speed Power [kW]
22-39 High Speed Power [HP]
22-4* Sleep Mode
22-40 Minimum Run Time
22-41 Minimum Sleep Time
22-42 Wake-up Speed [RPM]
22-43 Wake-up Speed [Hz]
22-44 Wake-up Ref./FB Difference
22-45 Setpoint Boost
22-46 Maximum Boost Time
22-5* End of Curve
22-50 End of Curve Function
22-51 End of Curve Delay
22-6* Broken Belt Detection
22-60 Broken Belt Function
22-61 Broken Belt Torque
22-62 Broken Belt Delay
22-7* Short Cycle Protection
22-75 Short Cycle Protection
22-76 Interval between Starts
22-77 Minimum Run Time
22-78 Minimum Run Time Override
22-79 Minimum Run Time Override Value
22-8* Flow Compensation
22-80 Flow Compensation
22-81 Square-linear Curve Approximation
22-82 Work Point Calculation
22-83 Speed at No-Flow [RPM]
22-84 Speed at No-Flow [Hz]
22-85 Speed at Design Point [RPM]
22-86 Speed at Design Point [Hz]
22-87 Pressure at No-Flow Speed
22-88 Pressure at Rated Speed
22-89 Flow at Design Point
22-90 Flow at Rated Speed
23- Time-based Functions**
23-0* Timed Actions
23-00 ON Time
23-01 ON Action
23-02 OFF Time
23-03 OFF Action
23-04 Occurrence
23-0* Timed Actions Set.
23-08 Timed Actions Mode
23-09 Timed Actions Reactivation
23-1* Maintenance
23-10 Maintenance Item
23-11 Maintenance Action
23-12 Maintenance Time Base
23-13 Maintenance Time Interval
23-14 Maintenance Date and Time
23-1* Maintenance Reset
23-15 Reset Maintenance Word
23-16 Maintenance Text
23-5* Energy Log
23-50 Energy Log Resolution

5

5

23-51 Period Start
23-53 Energy Log
23-54 Reset Energy Log
23-6* Trending
23-60 Trend Variable
23-61 Continuous Bin Data
23-62 Timed Bin Data
23-63 Timed Period Start
23-64 Timed Period Stop
23-65 Minimum Bin Value
23-66 Reset Continuous Bin Data
23-67 Reset Timed Bin Data
23-8* Payback Counter
23-80 Power Reference Factor
23-81 Energy Cost
23-82 Investment
23-83 Energy Savings
23-84 Cost Savings
24- Appl. Functions 2**
24-0* Fire Mode
24-00 Fire Mode Function
24-01 Fire Mode Configuration
24-02 Fire Mode Unit
24-03 Fire Mode Min Reference
24-04 Fire Mode Max Reference
24-05 Fire Mode Preset Reference
24-06 Fire Mode Reference Source
24-07 Fire Mode Feedback Source
24-09 Fire Mode Alarm Handling
24-1* Drive Bypass
24-10 Drive Bypass Function
24-11 Drive Bypass Delay Time
24-9* Multi-Motor Funct.
24-90 Missing Motor Function
24-91 Missing Motor Coefficient 1
24-92 Missing Motor Coefficient 2
24-93 Missing Motor Coefficient 3
24-94 Missing Motor Coefficient 4
24-95 Locked Rotor Function
24-96 Locked Rotor Coefficient 1
24-97 Locked Rotor Coefficient 2
24-98 Locked Rotor Coefficient 3
24-99 Locked Rotor Coefficient 4
25- Cascade Controller**
25-0* System Settings
25-00 Cascade Controller
25-02 Motor Start
25-04 Pump Cycling
25-05 Fixed Lead Pump
25-06 Number of Pumps
25-2* Bandwidth Settings
25-20 Staging Bandwidth
25-21 Override Bandwidth
25-22 Fixed Speed Bandwidth
25-23 SBW Staging Delay
25-24 SBW De-staging Delay
25-25 OBW Time
25-26 Destage At No-Flow
25-27 Stage Function

25-28 Stage Function Time
25-29 Destage Function
25-30 Destage Function Time
25-4* Staging Settings
25-40 Ramp-down Delay
25-41 Ramp-up Delay
25-42 Staging Threshold
25-43 De-staging Threshold
25-44 Staging Speed [RPM]
25-45 Staging Speed [Hz]
25-46 De-staging Speed [RPM]
25-47 De-staging Speed [Hz]
25-5* Alternation Settings
25-50 Lead Pump Alternation
25-51 Alternation Event
25-52 Alternation Time Interval
25-53 Alternation Timer Value
25-54 Alternation Predefined Time
25-55 Alternate if Load < 50%
25-56 Staging Mode at Alternation
25-58 Run Next Pump Delay
25-59 Run-on Line Delay
25-8* Status
25-80 Cascade Status
25-81 Pump Status
25-82 Lead Pump
25-83 Relay Status
25-84 Pump ON Time
25-85 Relay ON Time
25-86 Reset Relay Counters
25-9* Service
25-90 Pump Interlock
25-91 Manual Alternation
26- Analog I/O Option**
26-0* Analog I/O Mode
26-00 Terminal X42/1 Mode
26-01 Terminal X42/3 Mode
26-02 Terminal X42/5 Mode
26-1* Analog Input X42/1
26-10 Terminal X42/1 Low Voltage
26-11 Terminal X42/1 High Voltage
26-14 Term. X42/1 Low Ref./Feedb. Value
26-15 Term. X42/1 High Ref./Feedb. Value
26-16 Term. X42/1 Filter Time Constant
26-17 Term. X42/1 Live Zero
26-2* Analog Input X42/3
26-20 Terminal X42/3 Low Voltage
26-21 Terminal X42/3 High Voltage
26-24 Term. X42/3 Low Ref./Feedb. Value
26-25 Term. X42/3 High Ref./Feedb. Value
26-26 Term. X42/3 Filter Time Constant
26-27 Term. X42/3 Live Zero
26-3* Analog Input X42/5
26-30 Terminal X42/5 Low Voltage
26-31 Terminal X42/5 High Voltage
26-34 Term. X42/5 Low Ref./Feedb. Value
26-35 Term. X42/5 High Ref./Feedb. Value
26-36 Term. X42/5 Filter Time Constant
26-37 Term. X42/5 Live Zero

26-4* Analog Out X42/7
26-40 Terminal X42/7 Output
26-41 Terminal X42/7 Min. Scale
26-42 Terminal X42/7 Max. Scale
26-43 Terminal X42/7 Bus Control
26-44 Terminal X42/7 Timeout Preset
26-5* Analog Out X42/9
26-50 Terminal X42/9 Output
26-51 Terminal X42/9 Min. Scale
26-52 Terminal X42/9 Max. Scale
26-53 Terminal X42/9 Bus Control
26-54 Terminal X42/9 Timeout Preset
26-6* Analog Out X42/11
26-60 Terminal X42/11 Output
26-61 Terminal X42/11 Min. Scale
26-62 Terminal X42/11 Max. Scale
26-63 Terminal X42/11 Bus Control
26-64 Terminal X42/11 Timeout Preset
31- Bypass Option**
31-00 Bypass Mode
31-01 Bypass Start Time Delay
31-02 Bypass Trip Time Delay
31-03 Test Mode Activation
31-10 Bypass Status Word
31-11 Bypass Running Hours
31-19 Remote Bypass Activation
35- Sensor Input Option**
35-0* Temp. Input Mode
35-00 Term. X48/4 Temp. Unit
35-01 Term. X48/4 Input Type
35-02 Term. X48/7 Temp. Unit
35-03 Term. X48/7 Input Type
35-04 Term. X48/10 Temp. Unit
35-05 Term. X48/10 Input Type
35-06 Temperature Sensor Alarm Function
35-1* Temp. Input X48/4
35-14 Term. X48/4 Filter Time Constant
35-15 Term. X48/4 Temp. Monitor
35-16 Term. X48/4 Low Temp. Limit
35-17 Term. X48/4 High Temp. Limit
35-2* Temp. Input X48/7
35-24 Term. X48/7 Filter Time Constant
35-25 Term. X48/7 Temp. Monitor
35-26 Term. X48/7 Low Temp. Limit
35-27 Term. X48/7 High Temp. Limit
35-3* Temp. Input X48/10
35-34 Term. X48/10 Filter Time Constant
35-35 Term. X48/10 Temp. Monitor
35-36 Term. X48/10 Low Temp. Limit
35-37 Term. X48/10 High Temp. Limit
35-4* Analog Input X48/2
35-42 Term. X48/2 Low Current
35-43 Term. X48/2 High Current
35-44 Term. X48/2 Low Ref./Feedb. Value
35-45 Term. X48/2 High Ref./Feedb. Value
35-46 Term. X48/2 Filter Time Constant
35-47 Term. X48/2 Live Zero
99-* Devel. support
99-00 DAC 1 selection

99-01 DAC 2 selection
99-02 DAC 3 selection
99-03 DAC 4 selection
99-04 DAC 1 scale
99-05 DAC 2 scale
99-06 DAC 3 scale
99-07 DAC 4 scale
99-08 Test param 1
99-09 Test param 2
99-10 DAC Option Slot
99-11 RFI 2
99-12 Fan
99-13 Idle time
99-14 Paramdb requests in queue
99-15 Secondary Timer at Inverter Fault
99-16 No. of Current Sensors
99-20 HS Temp. (PC1)
99-21 HS Temp. (PC2)
99-22 HS Temp. (PC3)
99-23 HS Temp. (PC4)
99-24 HS Temp. (PC5)
99-25 HS Temp. (PC6)
99-26 HS Temp. (PC7)
99-27 HS Temp. (PC8)
99-29 Platform Version
99-40 StartupWizardState
99-90 Options present
99-91 Motor Power Internal
99-92 Motor Voltage Internal
99-93 Motor Frequency Internal
99-94 Imbalance derate [%]
99-95 Temperature derate [%]
99-96 Overload derate [%]

7 Status Messages

7.1 Status Display

When the Adjustable frequency drive is in status mode, status messages are generated automatically from within the Adjustable frequency drive and appear in the bottom line of the display (see *Figure 7.1*.)

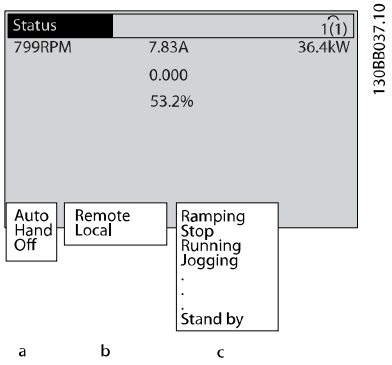

Figure 7.1 Status Display

a. The first word on the status line indicates where the stop/start command originates.

b. The second word on the status line indicates where the speed control originates.

c. The last part of the status line gives the present Adjustable frequency drive status. These show the operational mode the Adjustable frequency drive is in.

NOTE!

In auto/remote mode, the Adjustable frequency drive requires external commands to execute functions.

7.2 Status Message Definitions Table

The next three tables define the meaning of the status message display words.

	Operation Mode
Off	The Adjustable frequency drive does not react to any control signal until [Auto On] or [Hand On] is pressed.
Auto On	The Adjustable frequency drive is controlled from the control terminals and/or the serial communication.
Hand On	The Adjustable frequency drive can be controlled by the navigation keys on the LCP. Stop commands, reset, reversing, DC brake, and other signals applied to the control terminals can override local control.

Table 7.1

	Reference Site
Remote	The speed reference is given from external signals, serial communication, or internal preset references.
Local	The Adjustable frequency drive uses [Hand On] control or reference values from the LCP.

Table 7.2

	Operation Status
AC Brake	AC Brake was selected in *2-10 Brake Function*. The AC brake overmagnetizes the motor to achieve a controlled slow-down.
AMA finish OK	Automatic motor adaptation (AMA) was carried out successfully.
AMA ready	AMA is ready to start. Press [Hand On] to start.
AMA running	AMA process is in progress.
Braking	The brake chopper is in operation. Generative energy is absorbed by the brake resistor.
Braking max.	The brake chopper is in operation. The power limit for the brake resistor defined in *2-12 Brake Power Limit (kW)* is reached.
Coast	• Coast inverse was selected as a function for a digital input (parameter group 5-1*). The corresponding terminal is not connected. • Coast activated by serial communication

7

	Operation Status
Ctrl. Ramp-down	Control Ramp-down was selected in *14-10 Mains Failure*. • The AC line voltage is below the value set in *14-11 Mains Voltage at Mains Fault* at line power fault • The Adjustable frequency drive ramps down the motor using a controlled ramp-down
Current High	The Adjustable frequency drive output current is above the limit set in *4-51 Warning Current High*.
Current Low	The Adjustable frequency drive output current is below the limit set in *4-52 Warning Speed Low*
DC Hold	DC hold is selected in *1-80 Function at Stop* and a stop command is active. The motor is held by a DC current set in *2-00 DC Hold/ Preheat Current*.
DC Stop	The motor is held with a DC current (*2-01 DC Brake Current*) for a specified time (*2-02 DC Braking Time*). • DC Brake is activated in *2-03 DC Brake Cut-in Speed [RPM]* and a Stop command is active. • DC Brake (inverse) is selected as a function for a digital input (parameter group 5-1*). The corresponding terminal is not active. • The DC Brake is activated via serial communication.
Feedback high	The sum of all active feedbacks is above the feedback limit set in *4-57 Warning Feedback High*.
Feedback low	The sum of all active feedbacks is below the feedback limit set in *4-56 Warning Feedback Low*.
Freeze output	The remote reference is active which holds the present speed. • Freeze output was selected as a function for a digital input (Group 5-1*). The corresponding terminal is active. Speed control is only possible via the terminal functions speed up and slow. • Hold ramp is activated via serial communication.
Freeze output request	A freeze output command has been given, but the motor will remain stopped until a run permissive signal is received.

	Operation Status
Freeze ref.	*Freeze Reference* was chosen as a function for a digital input (parameter group 5-1*). The corresponding terminal is active. The Adjustable frequency drive saves the actual reference. Changing the reference is now only possible via terminal functions speed up and slow.
Jog request	A jog command has been given, but the motor will be stopped until a run permissive signal is received via a digital input.
Jogging	The motor is running as programmed in *3-19 Jog Speed [RPM]*. • *Jog* was selected as function for a digital input (parameter group 5-1*). The corresponding terminal (e.g., Terminal 29) is active. • The Jog function is activated via the serial communication. • The Jog function was selected as a reaction for a monitoring function (e.g., No signal). The monitoring function is active.
Motor check	In *1-80 Function at Stop, Motor Check* was selected. A stop command is active. To ensure that a motor is connected to the Adjustable frequency drive, a permanent test current is applied to the motor.
Over Voltage Control (OVC)	*Overvoltage* control was activated in *2-17 Over-voltage Control*. The connected motor is supplying the Adjustable frequency drive with generative energy. The overvoltage control adjusts the V/Hz ratio to run the motor in controlled mode and to prevent the Adjustable frequency drive from tripping.
PowerUnit Off	(For adjustable frequency drives with an external 24V power supply installed only.) Line power supply to the Adjustable frequency drive is removed, but the control card is supplied by the external 24V.
Protection md	Protection mode is active. The unit has detected a critical status (an overcurrent or overvoltage). • To avoid tripping, switching frequency is reduced to 4kHz. • If possible, protection mode ends after approximately 10sec. • Protection mode can be restricted in *14-26 Trip Delay at Inverter Fault*

	Operation Status
QStop	The motor is decelerating using *3-81 Quick Stop Ramp Time*. • *Quick stop inverse* was chosen as a function for a digital input (parameter group 5-1*). The corresponding terminal is not active. • The quick stop function was activated via serial communication.
Ramping	The motor is accelerating/decelerating using the active ramp-up/down. The reference, a limit value or a standstill is not yet reached.
Ref. high	The sum of all active references is above the reference limit set in *4-55 Warning Reference High*.
Ref. low	The sum of all active references is below the reference limit set in *4-54 Warning Reference Low*.
Run on ref.	The Adjustable frequency drive is running in the reference range. The feedback value matches the setpoint value.
Run request	A start command has been given, but the motor is stopped until a run permissive signal is received via digital input.
Running	The motor is driven by the Adjustable frequency drive.
Sleep Mode	The energy saving function is enabled. This means that at present the motor has stopped, but that it will restart automatically when required.
Speed high	Motor speed is above the value set in *4-53 Warning Speed High*.
Speed low	Motor speed is below the value set in *4-52 Warning Speed Low*.
Standby	In Auto On mode, the Adjustable frequency drive will start the motor with a start signal from a digital input or serial communication.
Start delay	In *1-71 Start Delay*, a delay starting time was set. A start command is activated and the motor will start after the start delay time expires.
Start fwd/rev	Start forward and start reverse were selected as functions for two different digital inputs (parameter group 5-1*). The motor will start in forward or reverse depending on which corresponding terminal is activated.
Stop	The Adjustable frequency drive has received a stop command from the LCP, digital input or serial communication.
Trip	An alarm occurred and the motor is stopped. Once the cause of the alarm is cleared, the Adjustable frequency drive can be reset manually by pressing [Reset] or remotely by control terminals or serial communication.
Trip lock	An alarm occurred and the motor is stopped. Once the cause of the alarm is cleared, power must be cycled to the Adjustable frequency drive. The Adjustable frequency drive can then be reset manually by pressing [Reset] or remotely by control terminals or serial communication.

Table 7.3

7

7

8 Warnings and Alarms

8.1 System Monitoring

The adjustable frequency drive monitors the condition of its input power, output, and motor factors as well as other system performance indicators. A warning or alarm may not necessarily indicate a problem internal to the adjustable frequency drive itself. In many cases, it indicates failure conditions from input voltage, motor load or temperature, external signals, or other areas monitored by the adjustable frequency drive's internal logic. Be sure to investigate those areas exterior to the adjustable frequency drive as indicated in the alarm or warning.

8.2 Warning and Alarm Types

Warnings
A warning is issued when an alarm condition is impending or when an abnormal operating condition is present and may result in the Adjustable frequency drive issuing an alarm. A warning clears by itself when the abnormal condition is removed.

Alarms
Trip
An alarm is issued when the Adjustable frequency drive is tripped, that is, the Adjustable frequency drive suspends operation to prevent Adjustable frequency drive or system damage. The motor will coast to a stop. The Adjustable frequency drive logic will continue to operate and monitor the Adjustable frequency drive status. After the fault condition is remedied, the Adjustable frequency drive can be reset. It will then be ready to start operation again.

A trip can be reset in any of 4 ways:

- Press [RESET] on the LCP
- Digital reset input command
- Serial communication reset input command
- Auto reset

Trip lock
An alarm that causes the Adjustable frequency drive to trip-lock requires that input power be cycled. The motor will coast to a stop. The Adjustable frequency drive logic will continue to operate and monitor the Adjustable frequency drive status. Remove input power to the Adjustable frequency drive and correct the cause of the fault, then restore power. This action puts the Adjustable frequency drive into a trip condition as described above and may be reset in any of those four ways.

8.3 Warning and Alarm Displays

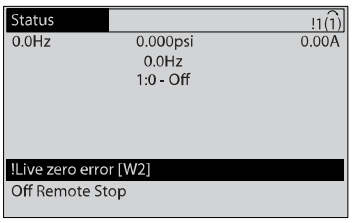

Figure 8.1

An alarm or trip lock alarm will flash on display along with the alarm number.

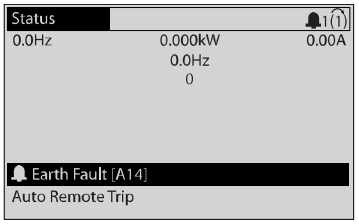

Figure 8.2

In addition to the text and alarm code on the adjustable frequency drive LCP, there are three status indicator lights.

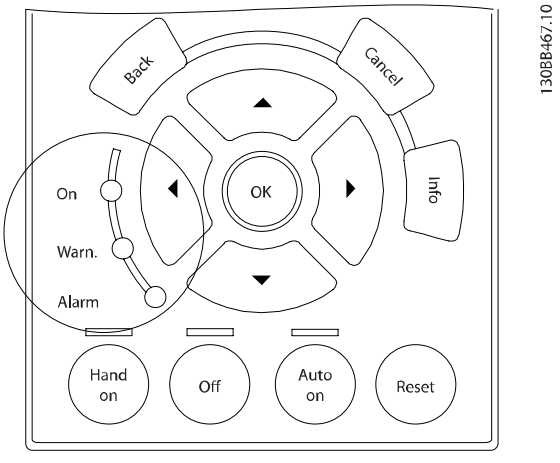

Figure 8.3

	Warn. LED	Alarm LED
Warning	ON	OFF
Alarm	OFF	ON (Flashing)
Trip Lock	ON	ON (Flashing)

Table 8.1

8.4 Warning and Alarm Definitions

Table 8.2 defines whether a warning is issued before an alarm, and whether the alarm trips the unit or trip locks the unit.

No.	Description	Warning	Alarm/Trip	Alarm/Trip Lock	Parameter Reference
1	10 Volts low	X			
2	Live zero error	(X)	(X)		6-01 Live Zero Timeout Function
4	Mains phase loss	(X)	(X)	(X)	14-12 Function at Mains Imbalance
5	DC link voltage high	X			
6	DC link voltage low	X			
7	DC overvoltage	X	X		
8	DC undervoltage	X	X		
9	Inverter overloaded	X	X		
10	Motor ETR over temperature	(X)	(X)		1-90 Motor Thermal Protection
11	Motor thermistor over temperature	(X)	(X)		1-90 Motor Thermal Protection
12	Torque limit	X	X		
13	Overcurrent	X	X	X	
14	Ground fault	X	X	X	
15	Hardware mismatch		X	X	
16	Short-circuit		X	X	
17	Control word timeout	(X)	(X)		8-04 Control Timeout Function
18	Start Failed				
23	Internal Fan Fault	X			
24	External Fan Fault	X			14-53 Fan Monitor
25	Brake resistor short-circuited	X			
26	Brake resistor power limit	(X)	(X)		2-13 Brake Power Monitoring
27	Brake chopper short-circuited	X	X		
28	Brake check	(X)	(X)		2-15 Brake Check
29	Drive over temperature	X	X	X	
30	Motor phase U missing	(X)	(X)	(X)	4-58 Missing Motor Phase Function
31	Motor phase V missing	(X)	(X)	(X)	4-58 Missing Motor Phase Function
32	Motor phase W missing	(X)	(X)	(X)	4-58 Missing Motor Phase Function
33	Inrush fault		X	X	
34	Fieldbus communication fault	X	X		
35	Out of frequency range	X	X		
36	Mains failure	X	X		
37	Phase Imbalance	X	X		
38	Internal fault		X	X	

No.	Description	Warning	Alarm/Trip	Alarm/Trip Lock	Parameter Reference
39	Heatsink sensor		X	X	
40	Overload of Digital Output Terminal 27	(X)			5-00 Digital I/O Mode, 5-01 Terminal 27 Mode
41	Overload of Digital Output Terminal 29	(X)			5-00 Digital I/O Mode, 5-02 Terminal 29 Mode
42	Overload of Digital Output On X30/6	(X)			5-32 Term X30/6 Digi Out (MCB 101)
42	Overload of Digital Output On X30/7	(X)			5-33 Term X30/7 Digi Out (MCB 101)
46	Pwr. card supply		X	X	
47	24 V supply low	X	X	X	
48	1.8 V supply low		X	X	
49	Speed limit	X	(X)		1-86 Trip Speed Low [RPM]
50	AMA calibration failed		X		
51	AMA check Unom and Inom		X		
52	AMA low I_{nom}		X		
53	AMA motor too big		X		
54	AMA motor too small		X		
55	AMA Parameter out of range		X		
56	AMA interrupted by user		X		
57	AMA timeout		X		
58	AMA internal fault	X	X		
59	Current limit	X			
60	External Interlock	X			
62	Output Frequency at Maximum Limit	X			
64	Voltage Limit	X			
65	Control Board Over Temperature	X	X	X	
66	Heat sink Temperature Low	X			
67	Option Configuration has Changed		X		
69	Pwr. Card Temp		X	X	
70	Illegal FC configuration			X	
71	PTC 1 Safe Stop	X	X[1)]		
72	Dangerous Failure			X[1)]	
73	Safe Stop Auto Restart				
76	Power Unit Setup	X			
77	Red. Pwr Mode				
79	Illegal PS config		X	X	
80	Drive Initialized to Default Value		X		
91	Analog input 54 wrong settings			X	
92	No-flow	X	X		22-2*
93	Dry Pump	X	X		22-2*
94	End of Curve	X	X		22-5*
95	Broken Belt	X	X		22-6*
96	Start Delayed	X			22-7*
97	Stop Delayed	X			22-7*
98	Clock Fault	X			0-7*
0.270 [201]	Fire M was Active				
202	Fire M Limits Exceeded				
203	Missing Motor				

8

No.	Description	Warning	Alarm/Trip	Alarm/Trip Lock	Parameter Reference
204	Locked Rotor				
243	Brake IGBT	X	X		
244	Heatsink temp	X	X	X	
245	Heatsink sensor		X	X	
246	Pwr.card supply		X	X	
247	Pwr.card temp		X	X	
248	Illegal PS config		X	X	
250	New spare parts			X	
251	New Type Code		X	X	

Table 8.2 Alarm/Warning Code List

(X) Dependent on parameter

1) Cannot be Auto reset via 14-20 Reset Mode

The warning/alarm information below defines each warning/alarm condition, provides the probable cause for the condition, and details a remedy or troubleshooting procedure.

WARNING 1, 10 Volts low

The control card voltage is below 10 V from terminal 50. Remove some of the load from terminal 50, as the 10 V supply is overloaded. Max. 15 mA or minimum 590 Ω.

This condition can be caused by a short in a connected potentiometer or improper wiring of the potentiometer.

Troubleshooting

Remove the wiring from terminal 50. If the warning clears, the problem is with the customer wiring. If the warning does not clear, replace the control card.

WARNING/ALARM 2, Live zero error

This warning or alarm will only appear if programmed by the user in *6-01 Live Zero Timeout Function*. The signal on one of the analog inputs is less than 50% of the minimum value programmed for that input. This condition can be caused by broken wiring or faulty device sending the signal.

Troubleshooting

Check connections on all the analog input terminals. Control card terminals 53 and 54 for signals, terminal 55 common. MCB 101 terminals 11 and 12 for signals, terminal 10 common. MCB 109 terminals 1, 3, 5 for signals, terminals 2, 4, 6 common).

Check that the Adjustable frequency drive programming and switch settings match the analog signal type.

Perform Input Terminal Signal Test.

WARNING/ALARM 4, Mains phase loss

A phase is missing on the supply side, or the line voltage imbalance is too high. This message also appears for a fault in the input rectifier on the adjustable frequency drive. Options are programmed at *14-12 Function at Mains Imbalance*.

Troubleshooting

Check the supply voltage and supply currents to the adjustable frequency drive.

WARNING 5, DC link voltage high

The intermediate circuit voltage (DC) is higher than the high voltage warning limit. The limit is dependent on the adjustable frequency drive voltage rating. The unit is still active.

WARNING 6, DC link voltage low

The intermediate circuit voltage (DC) is lower than the low voltage warning limit. The limit is dependent on the adjustable frequency drive voltage rating. The unit is still active.

WARNING/ALARM 7, DC overvoltage

If the intermediate circuit voltage exceeds the limit, the adjustable frequency drive trips after a time.

Troubleshooting

Connect a brake resistor

Extend the ramp time

Change the ramp type

Activate the functions in *2-10 Brake Function*

Increase *14-26 Trip Delay at Inverter Fault*

WARNING/ALARM 8, DC undervoltage

If the intermediate circuit voltage (DC link) drops below the under voltage limit, the adjustable frequency drive checks if a 24 V DC backup supply is connected. If no 24 V DC backup supply is connected, the adjustable frequency drive trips after a fixed time delay. The time delay varies with unit size.

Troubleshooting

Make sure that the supply voltage matches the adjustable frequency drive voltage.

Perform input voltage test.

Perform soft charge circuit test.

WARNING/ALARM 9, Inverter overload

The adjustable frequency drive is about to cut out because of an overload (current too high for too long). The counter for electronic, thermal inverter protection gives a warning at 98% and trips at 100%, while giving an alarm. The adjustable frequency drive *cannot* be reset until the counter is below 90%.

The fault is that the adjustable frequency drive is overloaded by more than 100% for too long.

Troubleshooting

Compare the output current shown on the LCP with the adjustable frequency drive rated current.

Compare the output current shown on the LCP with measured motor current.

Display the Thermal Drive Load on the LCP and monitor the value. When running above the adjustable frequency drive continuous current rating, the counter should increase. When running below the adjustable frequency drive continuous current rating, the counter should decrease.

WARNING/ALARM 10, Motor overload temperature

According to the electronic thermal protection (ETR), the motor is too hot. Select whether the adjustable frequency drive gives a warning or an alarm when the counter reaches 100% in *1-90 Motor Thermal Protection*. The fault occurs when the motor is overloaded by more than 100% for too long.

Troubleshooting

Check for motor overheating.

Check if the motor is mechanically overloaded.

Check that the motor current set in *1-24 Motor Current* is correct.

Ensure that Motor data in parameters 1-20 through 1-25 are set correctly.

If an external fan is in use, check in *1-91 Motor External Fan* that it is selected.

Running AMA in *1-29 Automatic Motor Adaptation (AMA)* tunes the adjustable frequency drive to the motor more accurately and reduces thermal loading.

WARNING/ALARM 11, Motor thermistor over temp

The thermistor might be disconnected. Select whether the Adjustable frequency drive gives a warning or an alarm in *1-90 Motor Thermal Protection*.

Troubleshooting

Check for motor overheating.

Check if the motor is mechanically overloaded.

When using terminal 53 or 54, check that the thermistor is connected correctly between either terminal 53 or 54 (analog voltage input) and terminal 50 (+10V supply) and that the terminal switch for 53 or 54 is set for voltage. Check *1-93 Thermistor Source* selects terminal 53 or 54.

When using digital inputs 18 or 19, check that the thermistor is connected correctly between either terminal 18 or 19 (digital input PNP only) and terminal 50. Check *1-93 Thermistor Source* selects terminal 18 or 19.

WARNING/ALARM 12, Torque limit

The torque has exceeded the value in *4-16 Torque Limit Motor Mode* or the value in *4-17 Torque Limit Generator Mode*. *14-25 Trip Delay at Torque Limit* can change this from a warning only condition to a warning followed by an alarm.

Troubleshooting

If the motor torque limit is exceeded during ramp-up, extend the ramp-up time.

If the generator torque limit is exceeded during ramp-down, extend the ramp-down time.

If torque limit occurs while running, possibly increase the torque limit. Be sure the system can operate safely at a higher torque.

Check the application for excessive current draw on the motor.

WARNING/ALARM 13, Overcurrent

The inverter peak current limit (approximately 200% of the rated current) is exceeded. The warning lasts about 1.5 s, then the adjustable frequency drive trips and issues an alarm. This fault may be caused by shock loading or fast acceleration with high inertia loads. If extended mechanical brake control is selected, trip can be reset externally.

Troubleshooting

Remove power and check if the motor shaft can be turned.

Make sure that the motor size matches the adjustable frequency drive.

Check parameters 1-20 through 1-25 for correct motor data.

ALARM 14, Ground fault

There is current from the output phases to ground, either in the cable between the Adjustable frequency drive and the motor or in the motor itself.

8

Troubleshooting:

Remove power to the Adjustable frequency drive and repair the ground fault.

Check for ground faults in the motor by measuring the resistance to ground of the motor leads and the motor with a megohmmeter.

ALARM 15, Hardware mismatch
A fitted option is not operational with the present control board hardware or software.

Record the value of the following parameters and contact your Danfoss supplier:

15-40 FC Type

15-41 Power Section

15-42 Voltage

15-43 Software Version

15-45 Actual Typecode String

15-49 SW ID Control Card

15-50 SW ID Power Card

15-60 Option Mounted

15-61 Option SW Version (for each option slot)

ALARM 16, Short circuit
There is short-circuiting in the motor or motor wiring.

Remove power to the adjustable frequency drive and repair the short circuit.

WARNING/ALARM 17, Control word timeout
There is no communication to the Adjustable frequency drive.
The warning will only be active when *8-04 Control Word Timeout Function* is NOT set to *OFF*.
If *8-04 Control Word Timeout Function* is set to *Stop* and *Trip*, a warning appears and the Adjustable frequency drive ramps down until it stops then displays an alarm.

Troubleshooting:

Check connections on the serial communication cable.

Increase *8-03 Control Word Timeout Time*

Check the operation of the communication equipment.

Verify a proper installation based on EMC requirements.

ALARM 18, Start failed
The speed has not been able to exceed *AP-70 Compressor Start Max Speed [RPM]* during start within the allowed time. (set in *AP-72 Compressor Start Max Time to Trip*). This may be caused by a blocked motor.

WARNING 23, Internal fan fault
The fan warning function is an extra protective function that checks if the fan is running/mounted. The fan warning can be disabled in *14-53 Fan Monitor* ([0] Disabled).

For the D, E, and F Frame filters, the regulated voltage to the fans is monitored.

Troubleshooting

Check for proper fan operation.

Cycle power to the Adjustable frequency drive and make sure that the fan operates briefly at start-up.

Check the sensors on the heatsink and control card.

WARNING 24, External fan fault
The fan warning function is an extra protective function that checks if the fan is running/mounted. The fan warning can be disabled in *14-53 Fan Monitor* ([0] Disabled).

Troubleshooting

Check for proper fan operation.

Cycle power to the Adjustable frequency drive and make sure that the fan operates briefly at start-up.

Check the sensors on the heatsink and control card.

WARNING 25, Brake resistor short circuit
The brake resistor is monitored during operation. If a short circuit occurs, the brake function is disabled and the warning appears. The adjustable frequency drive is still operational but without the brake function. Remove power to the adjustable frequency drive and replace the brake resistor (see *2-15 Brake Check*).

WARNING/ALARM 26, Brake resistor power limit
The power transmitted to the brake resistor is calculated as a mean value over the last 120 seconds of run time. The calculation is based on the intermediate circuit voltage and the brake resistance value set in *2-16 AC Brake Max. Current*. The warning is active when the dissipated braking is higher than 90% of the brake resistance power. If *Trip* [2] is selected in *2-13 Brake Power Monitoring*, the Adjustable frequency drive will trip when the dissipated braking energy reaches 100%.

WARNING/ALARM 27, Brake chopper fault
The brake transistor is monitored during operation and if a short circuit occurs, the brake function is disabled and a warning is issued. The Adjustable frequency drive is still operational but, since the brake transistor has short-circuited, substantial power is transmitted to the brake resistor, even if it is inactive.
Remove power to the Adjustable frequency drive and remove the brake resistor.

WARNING/ALARM 28, Brake check failed
The brake resistor is not connected or not working. Check *2-15 Brake Check*.

ALARM 29, Heatsink temp
The maximum temperature of the heatsink has been exceeded. The temperature fault will not reset until the temperature falls below a defined heatsink temperature. The trip and reset points are different based on the Adjustable frequency drive power size.

Troubleshooting
Check for the following conditions.

Ambient temperature too high.

Motor cable too long.

Incorrect airflow clearance above and below the Adjustable frequency drive

Blocked airflow around the Adjustable frequency drive.

Damaged heatsink fan.

Dirty heatsink.

ALARM 30, Motor phase U missing
Motor phase U between the adjustable frequency drive and the motor is missing.

Remove power from the adjustable frequency drive and check motor phase U.

ALARM 31, Motor phase V missing
Motor phase V between the adjustable frequency drive and the motor is missing.

Remove power from the adjustable frequency drive and check motor phase V.

ALARM 32, Motor phase W missing
Motor phase W between the adjustable frequency drive and the motor is missing.

Remove power from the adjustable frequency drive and check motor phase W.

ALARM 33, Inrush fault
Too many power-ups have occurred within a short time period. Let the unit cool to operating temperature.

WARNING/ALARM 34, communication fault
The serial communication bus on the communication option card is not working.

WARNING/ALARM 36, Mains failure
This warning/alarm is only active if the supply voltage to the adjustable frequency drive is lost and *14-10 Mains Failure* is NOT set to [0] *No Function*. Check the fuses to the adjustable frequency drive and line power supply to the unit.

ALARM 38, Internal fault
When an internal fault occurs, a code number defined in the table below is displayed.

Troubleshooting

Cycle power

Check that the option is properly installed

Check for loose or missing wiring

It may be necessary to contact your Danfoss supplier or service department. Note the code number for further troubleshooting directions.

No.	Text
0	Serial port cannot be initialized. Contact your Danfoss supplier or Danfoss Service Department.
256-258	Power EEPROM data is defective or too old
512-519	Internal fault. Contact your Danfoss supplier or Danfoss Service Department.
783	Parameter value outside of min/max limits
1024-1284	Internal fault. Contact your Danfoss supplier or the Danfoss Service Department.
1299	Option SW in slot A is too old
1300	Option SW in slot B is too old
1302	Option SW in slot C1 is too old
1315	Option SW in slot A is not supported (not allowed)
1316	Option SW in slot B is not supported (not allowed)
1318	Option SW in slot C1 is not supported (not allowed)
1379-2819	Internal fault. Contact your Danfoss supplier or Danfoss Service Department.
2820	LCP stack overflow
2821	Serial port overflow
2822	USB port overflow
3072-5122	Parameter value is outside its limits
5123	Option in slot A: Hardware incompatible with control board hardware
5124	Option in slot B: Hardware incompatible with control board hardware
5125	Option in slot C0: Hardware incompatible with control board hardware
5126	Option in slot C1: Hardware incompatible with control board hardware
5376-6231	Internal fault. Contact your Danfoss supplier or Danfoss Service Department.

Table 8.3

ALARM 39, Heatsink sensor
No feedback from the heatsink temperature sensor.

The signal from the IGBT thermal sensor is not available on the power card. The problem could be on the power card, on the gate drive card, or the ribbon cable between the power card and gate drive card.

WARNING 40, Overload of digital output terminal 27
Check the load connected to terminal 27 or remove short-circuit connection. Check *5-00 Digital I/O Mode* and *5-01 Terminal 27 Mode*.

8

WARNING 41, Overload of digital output terminal 29
Check the load connected to terminal 29 or remove short-circuit connection. Check *5-00 Digital I/O Mode* and *5-02 Terminal 29 Mode*.

WARNING 42, Overload of digital output on X30/6 or overload of digital output on X30/7
For X30/6, check the load connected to X30/6 or remove the short-circuit connection. Check *5-32 Term X30/6 Digi Out (MCB 101)*.

For X30/7, check the load connected to X30/7 or remove the short-circuit connection. Check *5-33 Term X30/7 Digi Out (MCB 101)*.

ALARM 45, Earth fault 2
Ground fault on start-up.

Troubleshooting

Check for proper grounding and loose connections.

Check for proper wire size.

Check motor cables for short-circuits or leakage currents.

8

ALARM 46, Power card supply
The supply on the power card is out of range.

There are three power supplies generated by the switch mode power supply (SMPS) on the power card: 24V, 5V, +/- 18V. When powered with 24V DC with the MCB 107 option, only the 24V and 5V supplies are monitored. When powered with three phase AC line voltage, all three supplies are monitored.

Troubleshooting

Check for a defective power card.

Check for a defective control card.

Check for a defective option card.

If a 24V DC power supply is used, verify proper supply power.

WARNING 47, 24 V supply low
The 24 V DC is measured on the control card. The external 24 V DC backup power supply may be overloaded, otherwise contact your Danfoss supplier.

WARNING 48, 1.8 V supply low
The 1.8 V DC supply used on the control card is outside of allowable limits. The power supply is measured on the control card. Check for a defective control card. If an option card is present, check for an overvoltage condition.

WARNING 49, Speed limit
When the speed is not within the specified range in *4-11 Motor Speed Low Limit [RPM]* and *4-13 Motor Speed High Limit [RPM]*, the adjustable frequency drive shows a warning. When the speed is below the specified limit in *1-86 Trip Speed Low [RPM]* (except when starting or stopping), the adjustable frequency drive will trip.

ALARM 50, AMA calibration failed
Contact your Danfoss supplier or Danfoss Service Department.

ALARM 51, AMA check Unom and Inom
The settings for motor voltage, motor current, and motor power are wrong. Check the settings in parameters 1-20 to 1-25.

ALARM 52, AMA low I_{nom}
The motor current is too low. Check the settings.

ALARM 53, AMA motor too big
The motor is too big for the AMA to operate.

ALARM 54, AMA motor too small
The motor is too small for the AMA to operate.

ALARM 55, AMA Parameter out of range
The parameter values of the motor are outside of the acceptable range. AMA will not run.

56 ALARM, AMA interrupted by user
The user has interrupted the AMA.

ALARM 57, AMA internal fault
Try to restart AMA again. Repeated restarts may overheat the motor.

ALARM 58, AMA internal fault
Contact your Danfoss supplier.

WARNING 59, Current limit
The current is higher than the value in *4-18 Current Limit*. Ensure that Motor data in parameters 1-20 through 1-25 are set correctly. Possibly increase the current limit. Be sure that the system can operate safely at a higher limit.

WARNING 60, External interlock
A digital input signal is indicating a fault condition external to the Adjustable frequency drive. An external interlock has commanded the Adjustable frequency drive to trip. Clear the external fault condition. To resume normal operation, apply 24V DC to the terminal programmed for external interlock. Reset the Adjustable frequency drive.

WARNING 62, Output frequency at maximum limit
The output frequency has reached the value set in *4-19 Max Output Frequency*. Check the application to determine the cause. Possibly increase the output frequency limit. Be sure the system can operate safely at a higher output frequency. The warning will clear when the output drops below the maximum limit.

WARNING/ALARM 65, Control card over temperature
The cutout temperature of the control card is 176° F [80°C].

Troubleshooting

- Check that the ambient operating temperature is within limits.
- Check for clogged filters.
- Check fan operation.
- Check the control card.

WARNING 66, Heatsink temperature low
The Adjustable frequency drive is too cold to operate. This warning is based on the temperature sensor in the IGBT module.
Increase the ambient temperature of the unit. Also, a trickle amount of current can be supplied to the Adjustable frequency drive whenever the motor is stopped by setting *2-00 DC Hold/Preheat Current* at 5% and *1-80 Function at Stop*

ALARM 67, Option module configuration has changed
One or more options have either been added or removed since the last power-down. Check that the configuration change is intentional and reset the unit.

ALARM 68, Safe stop activated
Loss of the 24V DC signal on terminal 37 has caused the filter to trip. To resume normal operation, apply 24V DC to terminal 37 and reset the filter.

ALARM 69, Power card temperature
The temperature sensor on the power card is either too hot or too cold.

Troubleshooting

Check that the ambient operating temperature is within limits.

Check for clogged filters.

Check fan operation.

Check the power card.

ALARM 70, Illegal adjustable frequency drive configuration
The control card and power card are incompatible. Contact your supplier with the type code of the unit from the nameplate and the part numbers of the cards to check compatibility.

ALARM 80, Drive initialized to default value
Parameter settings are initialized to default settings after a manual reset. Reset the unit to clear the alarm.

ALARM 92, No-Flow
A no-flow condition has been detected in the system. *22-23 No-Flow Function* is set for alarm. Troubleshoot the system and reset the Adjustable frequency drive after the fault has been cleared.

ALARM 93, Dry pump
A no-flow condition in the system with the Adjustable frequency drive operating at high speed may indicate a dry pump. *22-26 Dry Pump Function* is set for alarm. Troubleshoot the system and reset the Adjustable frequency drive after the fault has been cleared.

ALARM 94, End of curve
Feedback is lower than the setpoint. This may indicate leakage in the system. *22-50 End of Curve Function* is set for alarm. Troubleshoot the system and reset the Adjustable frequency drive after the fault has been cleared.

ALARM 95, Broken belt
Torque is below the torque level set for no load, indicating a broken belt. *22-60 Broken Belt Function* is set for alarm. Troubleshoot the system and reset the Adjustable frequency drive after the fault has been cleared.

ALARM 96, Start delayed
Motor start has been delayed due to short-cycle protection. *22-76 Interval between Starts* is enabled. Troubleshoot the system and reset the Adjustable frequency drive after the fault has been cleared.

WARNING 97, Stop delayed
Stopping the motor has been delayed due to short cycle protection. *22-76 Interval between Starts* is enabled. Troubleshoot the system and reset the Adjustable frequency drive after the fault has been cleared.

WARNING 98, Clock fault
Time is not set or the RTC clock has failed. Reset the clock in *0-70 Date and Time*.

WARNING 200, Fire mode
This indicates the Adjustable frequency drive is operating in fire mode. The warning clears when fire mode is removed. See the fire mode data in the alarm log.

WARNING 201, Fire Mode was Active
This indicates the Adjustable frequency drive had entered fire mode. Cycle power to the unit to remove the warning. See the fire mode data in the alarm log.

WARNING 202, Fire mode limits exceeded
While operating in fire mode one or more alarm conditions have been ignored which would normally trip the unit. Operating in this condition voids unit warranty. Cycle power to the unit to remove the warning. See the fire mode data in the alarm log.

WARNING 203, Missing motor
With a Adjustable frequency drive operating multi-motors, an underload condition was detected. This could indicate a missing motor. Inspect the system for proper operation.

WARNING 204, Locked rotor
With a Adjustable frequency drive operating multi-motors, an overload condition was detected. This could indicate a locked rotor. Inspect the motor for proper operation.

WARNING 250, New spare part
A component in the adjustable frequency drive has been replaced. Reset the adjustable frequency drive for normal operation.

WARNING 251, New type code
The power card or other components have been replaced and the type code changed. Reset to remove the warning and resume normal operation.

9 Basic Troubleshooting

9.1 Start-up and Operation

Symptom	Possible Cause	Test	Solution
Display dark / No function	Missing input power	See *Table 3.1*.	Check the input power source.
	Missing or open fuses or circuit breaker tripped	See open fuses and tripped circuit breaker in this table for possible causes.	Follow the recommendations provided
	No power to the LCP	Check the LCP cable for proper connection or damage.	Replace the faulty LCP or connection cable.
	Shortcut on control voltage (terminal 12 or 50) or at control terminals	Check the 24 V control voltage supply for terminal 12/13 to 20-39 or 10 V supply for terminal 50 to 55.	Wire the terminals properly.
	Wrong LCP (LCP from VLT® 2800 or 5000/6000/8000/ FCD or FCM)		Use only LCP 101 (P/N 130B1124) or LCP 102 (P/N 130B1107).
	Wrong contrast setting		Press [Status] + [▲]/[▼] to adjust the contrast.
	Display (LCP) is defective	Test using a different LCP.	Replace the faulty LCP or connection cable.
	Internal voltage supply fault or SMPS is defective		Contact supplier.
Intermittent display	Overloaded power supply (SMPS) due to improper control wiring or a fault within the adjustable frequency drive.	To rule out a problem in the control wiring, disconnect all control wiring by removing the terminal blocks.	If the display stays lit, then the problem is in the control wiring. Check the wiring for shorts or incorrect connections. If the display continues to cut out, follow the procedure for display dark.

9

Symptom	Possible Cause	Test	Solution
Motor not running	Service switch open or missing motor connection	Check if the motor is connected and the connection is not interrupted (by a service switch or other device).	Connect the motor and check the service switch.
	No line power with 24 V DC option card	If the display is functioning but no output, check that line power is applied to the adjustable frequency drive.	Apply line power to run the unit.
	LCP Stop	Check if [Off] has been pressed.	Press [Auto On] or [Hand On] (depending on operation mode) to run the motor.
	Missing start signal (Standby)	Check *5-10 Terminal 18 Digital Input* for correct setting for terminal 18 (use default setting).	Apply a valid start signal to start the motor.
	Motor coast signal active (Coasting)	Check *5-12 Coast inv.* for correct setting for terminal 27 (use default setting).	Apply 24 V on terminal 27 or program this terminal to *No operation.*
	Wrong reference signal source	Check reference signal: Local, remote or bus reference? Preset reference active? Terminal connection correct? Scaling of terminals correct? Reference signal available?	Program correct settings. Check *3-13 Reference Site.* Set preset reference active in parameter group *3-1* References.* Check for correct wiring. Check scaling of terminals. Check reference signal.
Motor running in wrong direction	Motor rotation limit	Check that *4-10 Motor Speed Direction* is programmed correctly.	Program correct settings.
	Active reversing signal	Check if a reversing command is programmed for the terminal in parameter group *5-1* Digital inputs.*	Deactivate reversing signal.
	Wrong motor phase connection		See in this manual.
Motor is not reaching maximum speed	Frequency limits set wrong	Check output limits in *4-13 Motor Speed High Limit [RPM], 4-14 Motor Speed High Limit [Hz]* and *4-19 Max Output Frequency*	Program correct limits.
	Reference input signal not scaled correctly	Check reference input signal scaling in *6-* Analog I/O mode* and parameter group *3-1* References.* Reference limits in parameter group 3-0*.	Program correct settings.
Motor speed unstable	Possible incorrect parameter settings	Check the settings of all motor parameters, including all motor compensation settings. For closed-loop operation, check PID settings.	Check settings in parameter group *1-6* Analog I/O mode.* For closed-loop operation, check settings in parameter group *20-0* Feedback.*
Motor runs rough	Possible over-magnetization	Check for incorrect motor settings in all motor parameters.	Check motor settings in parameter groups *1-2* Motor data, 1-3* Adv motor data,* and *1-5* Load indep. setting.*
Motor will not brake	Possible incorrect settings in the brake parameters. Possible too short ramp-down times.	Check brake parameters. Check ramp time settings.	Check parameter group *2-0* DC brake* and *3-0* Reference limits.*

9

Symptom	Possible Cause	Test	Solution
Open power fuses or circuit breaker trip	Phase to phase short	Motor or panel has a short phase to phase. Check motor and panel phase for shorts.	Eliminate any shorts detected.
	Motor overload	Motor is overloaded for the application.	Perform start-up test and verify motor current is within specifications. If motor current is exceeding nameplate full load current, motor may run only with reduced load. Review the specifications for the application.
	Loose connections	Perform pre-startup check for loose connections.	Tighten loose connections.
Line power current imbalance greater than 3%	Problem with line power (See *Alarm 4 Line phase loss* description)	Rotate input power leads into the adjustable frequency drive one position: A to B, B to C, C to A.	If imbalanced leg follows the wire, it is a power problem. Check line power supply.
	Problem with the adjustable frequency drive	Rotate input power leads into the adjustable frequency drive one position: A to B, B to C, C to A.	If imbalance leg stays on same input terminal, it is a problem with the unit. Contact the supplier.
Motor current imbalance greater than 3%	Problem with motor or motor wiring	Rotate output motor leads one position: U to V, V to W, W to U.	If imbalanced leg follows the wire, the problem is in the motor or motor wiring. Check motor and motor wiring.
	Problem with the adjustable frequency drives	Rotate output motor leads one position: U to V, V to W, W to U.	If imbalance leg stays on same output terminal, it is a problem with the unit. Contact the supplier.
Acoustic noise or vibration (e.g., a fan blade is making noise or vibrations at certain frequencies)	Resonances, e.g., in the motor/fan system	Bypass critical frequencies by using parameters in parameter group 4-6*.	Check if noise and/or vibration have been reduced to an acceptable limit.
		Turn off overmodulation in *14-03 Overmodulation*.	
		Change switching pattern and frequency in parameter group 14-0*.	
		Increase Resonance Dampening in *1-64 Resonance Dampening*.	

Table 9.1

9

WASTE PIPING DRAINAGE CONTROL:

The existing waste piping from the tunnels has been modified by the addition of Control Valves in the East Sewer Treatment Room and the Waste Manhole outside of the East Portal Building.

The Control Valve are controlled through the Fire Alarm System.

The valves are arranged to allow waste to flow to the existing indoor sedimentation tanks during normal operation. If the valves lose power during normal operation they will fail to allow flow to the sedimentation tanks.

SEQUENCE OF OPERATION:

- **If fire event occurs in Eisenhower Tunnel, then V-2 & V-3 shall be closed; V-1 shall be open; V-4 shall remain open.**
- **If fire event occurs in Johnson Tunnel, then V-1 shall be closed; V-2 shall remain open; V-4 shall be closed; V-3 shall be open.**
- **If fire event occurs in either tunnel the valves in Manhole MH-2 (V5 and V6) shall position to flow the waste to the retention tanks. V6 is closed and V5 is open during FFSS event.**

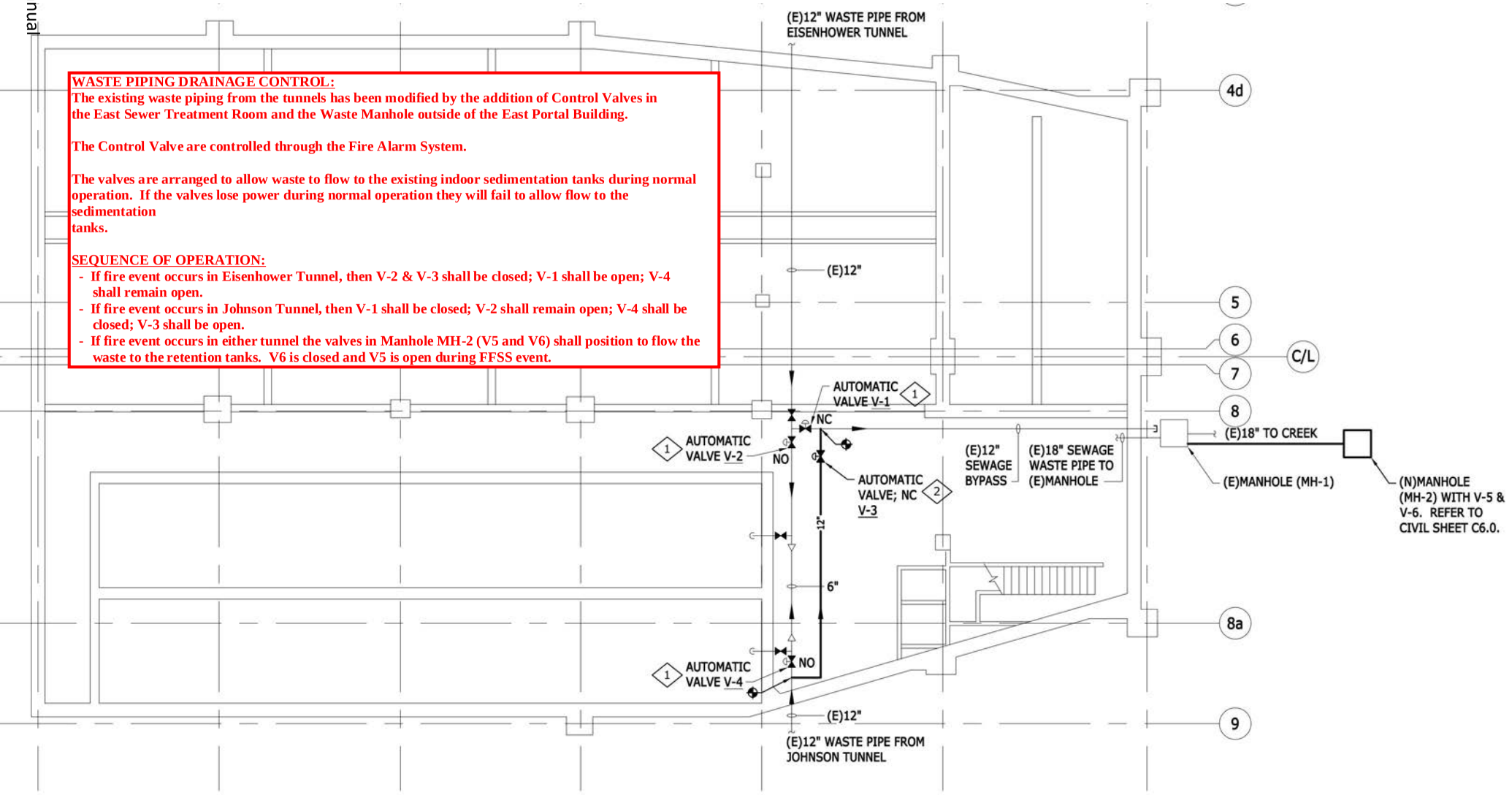

N

1 MECHANICAL LOWER LEVEL PLAN - EAST

SCALE:1/8" = 1'-0"

8' 4' 0 8'

SCALE: 1/8" = 1'-0"

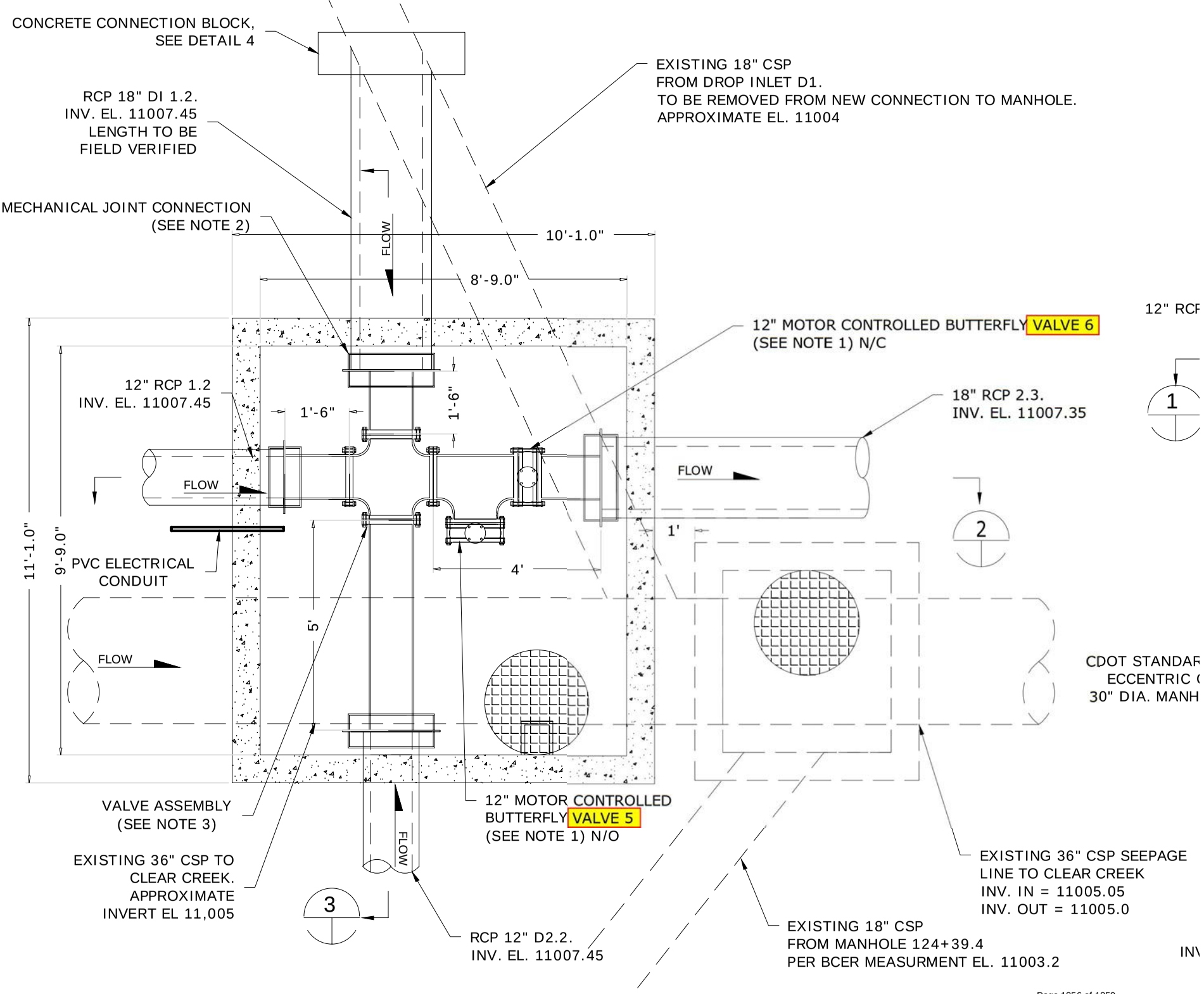

1 PLAN VIEW MANHOLE 2

KEYSTONE FIGURE 777/778 ELECTRIC ACTUATOR
INSTALLATION AND MAINTENANCE INSTRUCTIONS

MECHANICAL TRAVEL STOPS

WARNING
Mechanical travels stops should only be used during manual operation. If the travel limit switch is set incorrectly and the motorised actuator action is limited by the mechanical travel stop, the actuator life will be significantly reduced and will fail prematurely.

The mechanical stops are factory set, though in some cases adjustment may be required once the actuator is fitted to a valve and travel switches and cams have been adjusted.

Note:
For modulating units please refer to the specific product literature.

For on/off motorised end of travel adjustment please refer to "Limit switch and cam setting".

For manual operation of on/off units

a. Turn power off.
b. Loosen locknut and unwind it a few turns.
c. Use manual override to turn the actuator to desire limit position.
d. Tighten the mechanical stop screw until it reaches the shaft, and reverse one cycle.
e. Tighten locknut.
f. Check that the electrical limit switches are still engaged prior to reaching the mechanical travel stop.

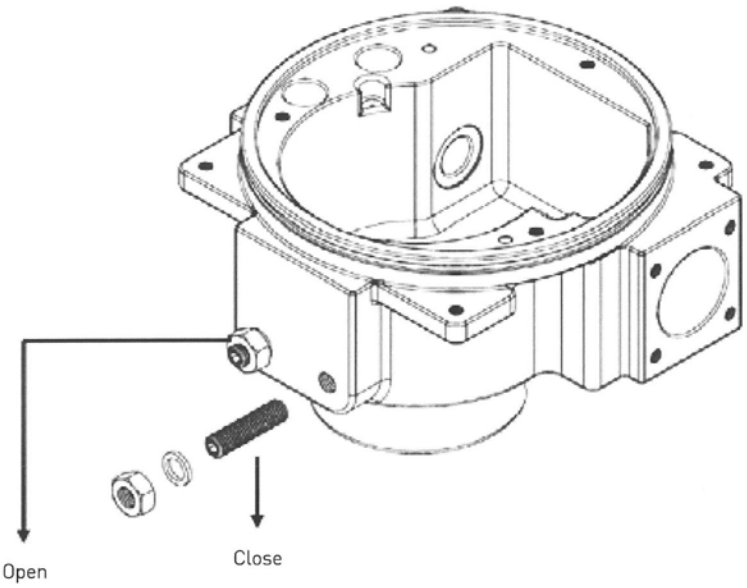

To manually operate the Drainage System Control Valves:
Turn power off to actuator.
Loosen open and closed locknuts.
Open or close valve manually with handwheel.
With the power off, the valve will not return to its original position: Make note of original position prior to manual operation.

PENTAIR

PENTAIR VALVES & CONTROLS
www.pentair.com/valves

All Pentair trademarks and logos are owned by Pentair plc. All other brand or product names are trademarks or registered marks of their respective owners. Because we are continuously improving our products and services, Pentair reserves the right to change product designs and specifications without notice. Pentair is an equal opportunity employer. © 2014 Pentair plc. All rights reserved.

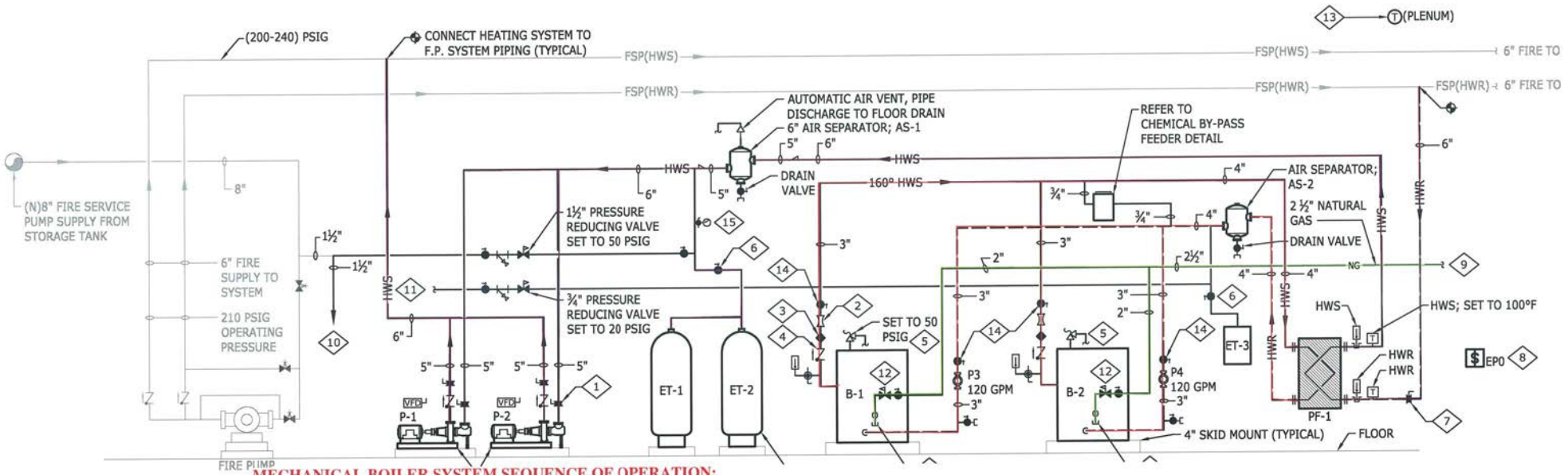

MECHANICAL BOILER SYSTEM SEQUENCE OF OPERATION:

The Boiler System shall operate to maintain the Fire Suppression Distribution Piping Above Freezing.

The Boiler System shall operate anytime the ambient temperature of plenum is less than 45 degrees.

Upon Boiler Control System Enable, start the lead Primary Distribution Pump (P1 or P2 Adjustable). P1 and P2 operate in a Lead-Standby configuration. If lead pump fails upon enable, then the standby pump will automatically start and an alarm shall be sent to Fire Alarm System as a General System Failure.

The primary pumps shall distribute a constant flow rate to the system. Lead Pump and Lag pump will rotate to equalize pump run time. Primary pumps P-1 and P-2 will shut down during Fire Event.

The Boiler controller will operate the Boilers B-1 and B-2 in a lead-lag manner to deliver 160 degree water to the plate & frame heat exchanger. The boilers operate to achieve a Fire Service water temperature setpoint of 100 degrees. The lag boiler will activate if the Fire Service water temperature drops to 95 degrees and an alarm will be generated.

An alarm will be generated if either boiler or boiler pump fails to operate.

Upon a fire event, the boiler system will deactivate.

Boiler system shall be off if ambient temperature is above 50 degrees.

The Inlet Air and Boiler Flue Fans VF-1 and VF-2 are interlocked to assure fan operation when either boiler is required to operate. Fans shall be proven on before boilers are allowed to operate. Vent fan VFDs operate to maintain flue pipe negative pressure (Field Adjustable). Failure to prove will generate an alarm.

The Copper-fin II - Replacing the Inlet Air Filter

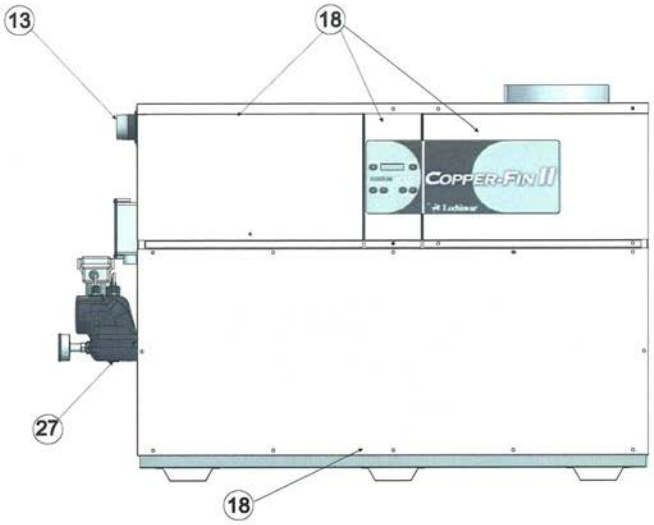

Models 992 - 2072 Front View

Keynote 15: Inlet Air Filter.
In order to remove the filter, push up from the bottom and pull filter out through the top of the rack. Install new filter in from the top of the filter rack.

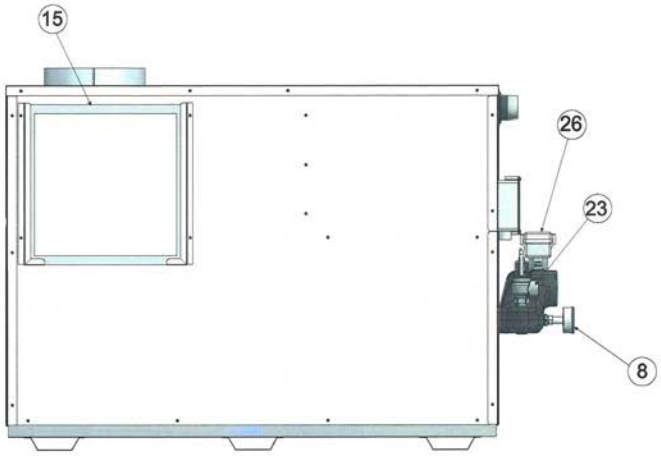

Models 992 - 2072 Rear View

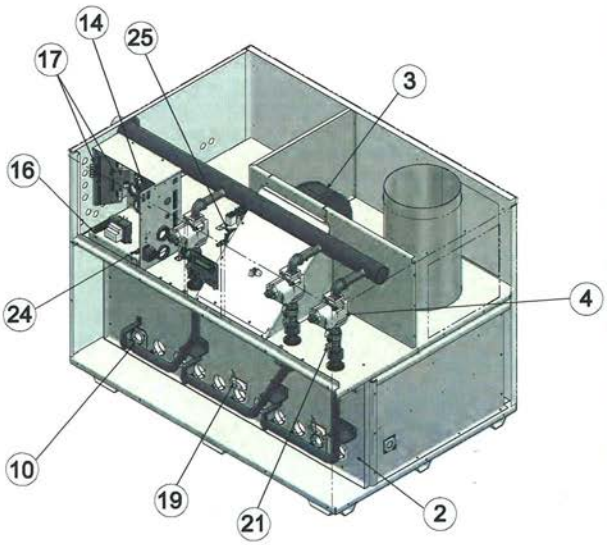

Models 992 - 2072 Right Side (inside unit)

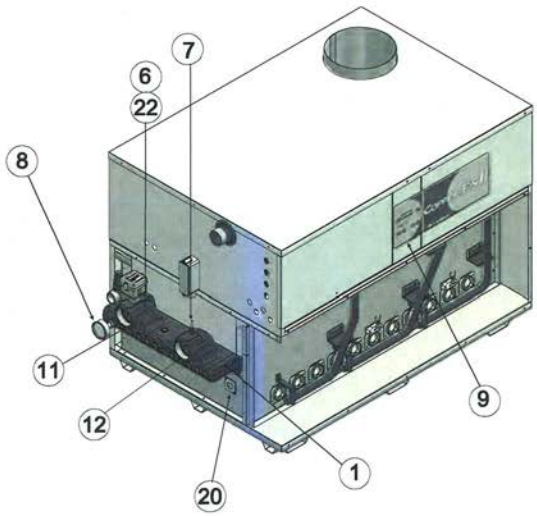

Models 992 - 2072 Left Side (inside unit)